A History of the Survivability Design of Military Aircraft

Robert E. Ball[1]
Naval Postgraduate School
Monterey, California

Dale B. Atkinson[2]
Springfield, Virginia

Abstract

In simple words, survivability in combat is achieved by not getting hit by the enemy's weapons or withstanding the effects of any hits suffered. The likelihood an aircraft gets hit while on a mission is referred to as the aircraft's susceptibility, and the likelihood the aircraft is killed by the hit is referred to as the aircraft's vulnerability. Reduction of aircraft susceptibility is achieved by (1) the selection of the appropriate weapons, tactics, threat suppression, and support jamming for the mission, (2) reducing the aircraft's signatures, and (3) incorporating on-board threat warning equipment and countermeasures in the form of electromagnetic jammers and expendables. Reduction of aircraft vulnerability is achieved by (1) the use of redundant flight critical components, adequately separated so that a single hit does not kill them all, (2) properly locating the critical components to reduce vulnerability, (3) designing the critical components, or adding equipment, to suppress the effects of any hits, and (4) shielding those components that cannot be protected otherwise. All of these concepts for enhancing survivability impact the design of the aircraft. The importance of survivability in the design of aircraft has varied throughout the 20th century from a total neglect to the highest priority. This paper presents the evolution of the survivability design of aircraft from the beginning of World War II to the present time.

Introduction

Aircraft combat survivability is defined in [1] as "the capability of an aircraft to avoid and/or withstand a man-made hostile environment." The inability of an aircraft to avoid the radars, guns, ballistic projectiles, guided missiles, exploding warheads, and other elements that make up the hostile air defense environment is referred to as the susceptibility of the aircraft. An aircraft's susceptibility can be measured by the probability the aircraft is hit while on its mission, P_H. Thus, slow, low-flying aircraft that are easily detected, tracked, engaged and eventually hit with one or more damage-causing mechanisms associated with the enemy's weapons are very susceptible. Fast, high-flying aircraft that are difficult to detect, difficult to track if detected, difficult to engage if tracked, and difficult to hit if engaged are relatively unsusceptible.

The inability of an aircraft to withstand any hits by the hostile environment is referred to as the vulnerability of the aircraft. An aircraft's vulnerability can be measured by the conditional probability the aircraft is killed given a hit, $P_{K/H}$. Aircraft that have one engine, no fuel system fire/explosion protection, redundant but collocated hydraulic systems with flammable hydraulic fluid, and one unprotected pilot are very vulnerable. Aircraft with two widely separated engines, protected fuel systems, redundant and separated hydraulic systems with non-flammable hydraulic fluid, and shielding around the pilot are relatively invulnerable.

The survivability of an aircraft can be measured by the probability of survival, P_S, which depends upon the aircraft's susceptibility and vulnerability according to the equation

$$P_S = 1 - P_H P_{K/H}$$

Thus, survivability is enhanced when susceptibility and vulnerability are reduced.

---

[1] Distinguished Professor of Aeronautics and Astronautics, Fellow AIAA

[2] Consultant, Associate Fellow AIAA

This paper is declared a work of the U.S. Government and is not subject to copyright protection in the United States.

Another aspect of survivability is the ability to rapidly repair any damage sustained in battle. If this damage cannot be quickly repaired, the aircraft may not be returned to action in time to contribute to the final outcome; and in essence it becomes a 'killed' aircraft. Thus, the design of an aircraft to allow the rapid repair of battle damage is an indirect contributor to survivability, not because it increases the survivability of the individual aircraft, but because it enhances force reconstitution and, consequently, force survivability.

Survivability Enhancement Features and Concepts

Any particular characteristic of the aircraft, specific piece of equipment, design technique, armament, or tactic that reduces either the susceptibility or the vulnerability of the aircraft has the potential for increasing survivability and is referred to as a survivability enhancement feature. [1] Table 1 contains a list of some of the survivability enhancement features that have been used on aircraft. Each of the survivability enhancement features listed in Table 1 can be grouped under one of the six concepts for reducing susceptibility or six concepts for reducing vulnerability. Table 2 contains the twelve survivability enhancements concepts with an example of a particular survivability enhancement feature under each concept.

Survivability and Aircraft Design

Combat survivability as a formal design discipline for aircraft is a relatively new concept. Although many aircraft of the past were designed with survivability in mind, particularly during WW II, until recently there was no "systems approach" to the survivability design solution. Guns and missiles were added for self-defense, fuel systems were protected from fire and explosions, better tactics were developed, electronic countermeasures (ECM) were used, more realistic training was provided, structures were made more resistant to enemy fire, and camouflage paint schemes were applied. However, all of this was done within the context of the individual aircraft design disciplines, and no attempt was made to justify the inclusion of any of these survivability enhancement features in the design other than to note that aircraft that had them lived longer in combat were "better" or more effective than those that didn't. The hard lessons learned in combat were fed back into the design of new and improved versions.

There were two reasons for this historical lack of a systems approach to survivability and a quantification of the "payoffs" or increase in operational effectiveness and the costs associated with a more survivable design. First, the systems approach to aircraft design had not been fully developed. Second, there were no specific design requirements imposed by the military Services on the various measures of survivability, such as the maximum allowable $P_{K/H}$ or vulnerable area (that area on the aircraft which if hit would cause an aircraft kill) or radar cross section, because survivability was not considered to be a formal attribute of a military aircraft. Consequently, there was no apparent need for a formal discipline.

The importance of survivability in the design of military aircraft increased dramatically in the middle 1960's when many aircraft, not specifically designed to be survivable, were shot down in Southeast Asia (SEA). In the years from 1963 to 1973, the U. S. military Services lost approximately 5,000 aircraft to enemy fire in SEA. The losses were nearly equally divided between fixed-wing aircraft and helicopters. Perhaps the first publication to bring attention to the technology that could make aircraft more survivable was the paper "Design of Fighter Aircraft for Combat Survivability," published in 1969. [2]

Because of the U.S. military's experience over the past five decades with aircraft that were not specifically designed to survive in combat, survivability has become a "critical system characteristic" that has emerged as a distinct and important design discipline. A viable, cost-effective technology exists for reducing susceptibility and vulnerability, a methodology exists for assessing survivability, education in survivability is available, testing for survivability is mandated, top level survivability design guidance is prescribed, and quantified requirements on the susceptibility and vulnerability of aircraft are now routinely specified. Table 3 shows the history of the requirements for survivability since 1950. Much of the credit for the increased emphasis on the survivability of aircraft goes to the Joint Technical Coordinating Group on Aircraft Survivability (JTCG/AS), which was established in 1971 with a goal to develop survivability as a design discipline. Credit also goes to the Department of Defense survivability organizations, the survivability engineers in the aircraft industry, and those military program managers that made sure their aircraft were designed to be survivable.

This paper will review the evolution of the survivability design of aircraft from the beginning of

World War II to the present time. The review will examine both susceptibility and vulnerability reduction. However, because of the classified nature of much of the technology for susceptibility reduction, the paper will emphasize vulnerability reduction.

Susceptibility Reduction

World War II

Susceptibility reduction has been a goal of the tactician from the beginning. The tactics, weapons selection, mission planning systems, force packaging, and threat suppression used by the military balance the requirement to accomplish the mission with the expected aircraft losses. This is known as managing attrition. Managing attrition by avoiding the enemy's air defense has always been a high priority goal. During WW II, hundreds of B–17s flew at high altitude in box formations, escorted by P–47 and P–51 fighters looking for the enemy fighters. The bombers were located far enough apart – so that an exploding shell from an anti–aircraft artillery piece (AAA), known as flak, would not damage or kill more than one aircraft – but close enough together so that the enemy fighters could not easily maneuver between them. They were loaded down with twin–50 cal machine guns mounted in electrically driven turrets, and eight of the ten crew members were firing guns at the enemy fighters. The weight of the guns and ammunition was approximately twice the weight of the bombs carried. [3] The B–17s flew during the day, which made them more susceptible, because they used the Norden bombsight which required the bombardier to see the target. The British flew their Lancaster and Halifax bombers at night because they had a better chance of avoiding the fighters and the flak. As a result, they were less susceptible and hence more survivable at night. However, it also was more difficult to destroy a particular factory or bridge when bombing at night. The development of electronic countermeasures to the early radar systems was a high priority item, and radar–reflecting chaff or "window" was used extensively, after some early hesitation because of the fear the enemy might use it against the allied radars. References [4] and [5] present a detailed history of the use of electronic countermeasures in WW II.

The Southeast Asia Conflict

Many of the tactics used to avoid the hostile environment in SEA in the decade from 1963–72 were essentially the same as those used in WW II, such as formations of bombers escorted by fighters. However, the bombers, such as the B–52, F–105, F–4, A–4, A–6, and A–7, had little or no self–defense capability. They relied totally on the fighter escorts, such as the F–4, to keep the enemy fighters away. The surface–to–air guided missile (SAM) emerged as a major threat to contend with, and on–board threat warning receivers and electronic jamming equipment, and the support jamming provided by aircraft such as the EA–6, became major contributors to survivability. Specially modified aircraft were used in the suppression of enemy air defense (SEAD) role to seek out and destroy the enemy SAM launch sites. Mission profiles were often used that kept the aircraft out of the high altitude envelopes of the SAMs but put them within range of ground–based small arms and AAA fire. Reference [5] presents a brief history of the use of electronic warfare in the SEA conflict.

The Recent Past

As a result of the large number of tactical and strategic aircraft lost in the SEA conflict, a major revolution in the design priorities of military aircraft began in the late 1970's when the first stealth aircraft programs were started in an attempt to reduce aircraft susceptibility without the use of large numbers of supporting aircraft. These so–called stealthy aircraft, such as the F–117, A–12, F–22, RAH–66, and the B–2, look different. Their engine inlets and exhausts are modified, their wing sweep angles are high, some of them lack the traditional vertical tail, and they do not have the many bumps and bulges that non–stealthy aircraft have. Even the relatively small stealth aircraft carry their ordnance inside.

There are many other changes associated with susceptibility reduction that are not so obvious. Because of the stealthy design, the flight control system may have to contend with statically unstable aircraft. Manufacturing procedures must contend with different materials, higher tolerances, and complex shaping requirements; and the sensors must be properly located on the aircraft to minimize their contribution to the aircraft's signatures while maintaining their ability to sense.

Some other not–so–obvious design impacts are related to the requirements associated with the electronic warfare equipment carried by the aircraft. This equipment provides the concepts of threat warning, noise jamming and deceiving, and expendables. Adequate space, cooling, and electrical power for the

processors, sensors, and data buses put additional requirements on the design. Should the countermeasures packages be carried externally or internally. Where are the antennas located? Will they affect the radar signature? Another not-so-obvious impact of susceptibility reduction, but one that can be a major contributor to aircraft weight, is the mission flight profile. Aircraft are designed to fly a particular flight profile, such as high-low-low-high. With this profile, the aircraft takes off, climbs to high altitude, and efficiently cruises toward the target. It then drops down to a low altitude to avoid detection by the enemy's air defense sensors and high altitude SAMs and jinks to avoid being hit by enemy gunfire. The target is attacked at low altitude, typically with a pop-up maneuver to acquire the target. After attacking the target, the aircraft heads for home, first at a low altitude until out of the enemy's weapon envelopes, and then at a high altitude for optimum cruise efficiency. The drop down to low altitude, which is solely for enhanced survivability, puts the aircraft in a much more severe flight environment. Drag increases significantly, fuel is burned at a much higher rate to maintain the fast speed required to survive the transit through the enemy territory, and the air loads on the aircraft are much higher than those at high altitude with no maneuvering. One of the most attractive features of a stealthy aircraft is the potential use of a high-high-high flight profile; it keeps the aircraft out of the range of the ground-based guns, a long-time, lethal foe of aircraft.

Vulnerability Reduction

Some General Principles

The vulnerability of an aircraft is reduced by designing the aircraft to withstand any hits by the damage-causing mechanisms created by the enemy warheads, such as penetrators, fragments, incendiary particles, and blast. This is acomplished by ensuring that the critical components on the aircraft continue to function after the aircraft is hit. Critical components are those components whose loss of function or whose kill mode leads to the loss of an essential function, such as lift, thrust, and control for flight. The kill modes associated with the components of each of the major systems on an aircraft are listed in Table 4. Vulnerability is reduced by preventing these kill modes from occurring.

World War II

The vulnerability reduction features used on the aircraft of WW II were the result of wartime experience. Most of the aircraft that were in use at the beginning of the war, such as the Fairey Battle, Brewster Buffalo, Grumman F4F Wildcat, and Boeing B-17, were either extensively modified during the war to make them more survivable or were used on missions with low threat levels. An excellent paper on the effects of enemy gun fire on the German Ju-88 notes that the cost of the Ju-88s lost in combat was the largest single expenditure of the entire program. [6] According to [6], the operations of the Ju-88 were discontinued in 1944 because the opposition of the Allies' standard pursuit aircraft had become so strong. References [1], [3], and [7] present many of the vulnerability features used on several aircraft of the WW II. Table 7 lists some of these features. Each feature was incorporated to prevent one or more of the kill modes listed in Table 4 from occurring.

The Southeast Asia Conflict

Many of the aircraft that fought in the Southeast Asia conflict were designed for high altitude fighting with missiles and for nuclear war. For example, the McDonnell F-4 Phantom II was originally designed as a deck-launched interceptor for the U.S. Navy that would dash out to the enemy bombers approaching the carrier and kill them with air-to-air missiles. There was no (or very little) attention paid during the design of the F-4 (or to the design of any other aircraft of that era) to the damage that enemy guns or guided missiles might do to the aircraft. Due to this lack of attention to survivability during design, the U.S. military began to lose a significant number of aircraft as the SEA conflict intensified.

Because of these losses, the Air Force sent a fact-finding team into the area in 1966 to determine the loss cause(s). The team interviewed crew members who had been shot down and recovered and the wingmen of those not recovered. They also inspected and collected data on battle-damaged aircraft that had returned to base. The battle damage data was used to determine the location and types of damage that did not result in an aircraft loss. The original Air Force directive that identified the problem conjectured that the aircraft were falling out of the sky because of damage to the structure. However, the on-site team determined that the single most important cause of aircraft losses was actually fuel system fire or explosion. Another significant cause of aircraft losses was damage to the flight control system.

Often, damage to the redundant (but collocated) hydraulic components would result in hard–over control surface failures and an uncontrollable aircraft, forcing the pilot to eject – if he could. Many of the control failures were caused by a fuel or hydraulic fluid fire that destroyed the control components.

After the first Air Force team returned in 1966, they recommended a number of actions to reduce the future loss of aircraft. All were approved by Air Force Headquarters. One recommendation was to conduct vulnerability assessments on the tactical aircraft operating in North Vietanm (the F–4, RF–4, F–105, and RF–101) and to develop vulnerability reduction retrofit–packages based upon the combat data collected and the vulnerability assessments. The primary emphasis was on the suppression of fuel system fire and explosion and the prevention of the loss of flight control. Self–sealing fuel tanks and lines and the placement of flexible, reticulated polyurethane orange foam into the fuel tanks were some of the vulnerability reduction features designed to prevent fuel–related fires and explosions.

Features designed to prevent the loss of control were added to both the F–105 and the F–4. A stabilator lock that was activated by the pilot if all hydraulic power was lost at the stabilator actuator was added to the F–105. On the F–4, an Auxillary Power Unit (APU) was added to the stabilator actuator, and armor was placed below the hydraulic components. Another change to the flight control system of the F–4 concerned the hydraulic power supplied to the aluminum aileron actuators. The original hydraulic system consisted of two primary flight control systems, PC1 and PC2, and the utility system. Both PC1 and PC2 supplied power to both aileron actuators. Thus, a hit near either of the aileron actuators (or a fatigue crack) could damage the aluminum actuator, causing the loss of both PC1 and PC2, and the subsequent loss of the aircraft. In the more survivable design, the aluminum actuators were replaced with steel actuators, and the hydraulic lines were replumbed, with utility replacing PC1 in one wing and PC2 in the other wing. With this less vulnerable design, a hit near the aileron actuator could cause a loss of PC1 and utility, or PC2 and utility, but not both PC1 and PC2. [8]

This vulnerability reduction design of the aileron hydraulic system saved the lives of at least 24 air crews that were flying the modified F–4 when they lost all hydraulics in one wing. Twelve of those aircraft were in a combat zone. The resulting savings due to this particular feature were estimated to be $51M (at $2.5M per aircraft) plus the lives of the 24 air crews. The cost of the modification was $9M, but it would have been much less had the hydraulic separation been in the original design. [8] There are many other examples of aircraft modifications that were made to reduce vulnerabilities that were discovered in combat. Table 6 lists some of the features incorporated on the aircraft that fought in SEA. These features were added to prevent one or more of the kill modes listed in Table 4. Many of them, if not most, were retrofitted, and many also contributed to aircraft safety.

The Recent Past

Many of the aircraft flying today were designed during and after the SEA conflict. The lessons learned in combat in that conflict have strongly influenced the design of these aircraft. Three of these aircraft, the Air Force's A–10A Thunderbolt II (affectionately known as the Warthog), the Navy's F/A–18A Hornet, and the Army's UH–60A Blackhawk, have been selected as examples to illustrate the technology for reducing vulnerability that evolved from the late 1960's through the middle 1980's.

The A–10's primary mission was to kill tanks with a 30mm gun and air–to–surface missiles. In this role, it would face a variety of guns and missiles, and it's vulnerability would be tested in combat. Consequently, the aircraft was the first modern fixed–wing aircraft to be designed, from its inception, to a complete set of survivability requirements. It incorporates over 100 vulnerability reduction features, many of which were verified by ballistic testing. In Operation Desert Storm in 1991, the A–10 had an opportunity to show what it could do. According to Air Force Capt. Paul Johnson, who flew home from a mission over Kuwait with a gaping hole in his A–10's right wing, "We always expected the A–10 to be a tough customer, but it hadn't been proven." [9] The survivability and battle damage repair features that were designed into the A–10 'paid off' in Desert Storm. According to an article in Aviation Week & Space Technology, "Survivability features designed into the Fairchild A–10 proved their worth during its first exposure to combat in Operation Desert Storm, when many Thunderbolts flew home despite extensive battle damage sustained in successful low–level attacks on enemy tanks and artillery. ... Most of the damaged aircraft were returned quickly to service by U.S. Air Force aircraft battle damage repair (ABDR) crews. ... Of 20 aircraft that were at least 'significantly' damaged, only one could not be returned to service by ABDR crews ... ." [10] According to Capt. Johnson,

"The guys developed a great affection for the airplane and a very healthy respect for what it could absorb." [9]

The F/A–18 was the Navy's first aircraft in which survivability considerations played a major role in the design. Trade–off studies were performed to determine the payoffs and costs associated with each enhancement feature considered. Those features that had high pay–offs with relatively low costs were incorporated because the Hornet is both a fighter and an attack aircraft and had to perform well in both roles. The F/A–18 is the Navy's most survivable aircraft flying today. It, too, proved itself to be a survivable aircraft in Desert Storm.

Because of the large number of Army helicopters lost to small arms fire in SEA, the UH–60, which was the winning design for the Utility Tactical Transport Aircraft System (UTTAS) competition, had a firm design requirement on vulnerability. The helicopter in forward flight was to be capable of safe flight for at least 30 minutes after a single hit by a 7.62mm API projectile. [11] In the vernacular of the vulnerability engineer, the helicopter must have zero vulnerable area for a B level attrition kill. A minimum vulnerable area to the 23mm HEI was a design goal. The reduced vulnerability paid off in Grenada. "The BLACKHAWK played a key role in combat during the 1983 Grenada invasion. ... It sustained and survived small arms and 23mm anti-aircraft fire while carrying out its mission of transporting and supporting Army Rangers. Of the 32 BLACKHAWKS used in Grenada, ten were damaged in combat. One helicopter had 45 bullet holes that damaged the rotor blades, fuel tanks, and control systems, yet it still managed to complete its mission." [12]

To illustrate the state–of–the–art of vulnerability reduction design in the recent past, the vulnerability reduction features used on the A–10A, F/A–18A, and the UH–60A to prevent the system kill modes from occurring are given in Tables 7a–e and Figs. 1–3 for the major systems. [13, 14, and 15] All three aircraft, as well as the F–117 and many of the other aircraft involved in the operation, proved themselves to be survivable aircraft in Desert Storm. They took some hits, but suffered very few losses. This combat experience validated the approach to survivability design that was taken during 1970's and 80's.

Testing for Survivability

The current generation of operational aircraft, as well as those in development, are undergoing extensive life fire testing. The Joint Live Fire (JLF) test program, initiated in the early 1980's, has tested the F–15, F–16, F/A–18, AV–8B, UH–60A, and AH–64A to both non–explosive and explosive ballistic projectiles. The congressionally mandated Live Fire Test (LFT) law for aircraft in development, passed in FY87, requires realistic vulnerability tests on the complete aircraft, with all combustibles on–board, using weapons likely to be encountered in combat. If such tests are unreasonably expensive and impractical, a waiver must be approved by the Secretary of Defense prior to the entry into Engineering and Manufacturing Development, and an alternate realistic test program plan must be submitted and approved. Vulnerability testing of components and subsystems early in the development cycle is strongly encouraged in order to identify vulnerabilities and eliminate them without major weight and cost penalties. The law has had a major beneficial effect on the vulnerability reduction of many of the aircraft currently operational, as well as those in development, and this beneficial effect should continue into the future. [16]

Present and Future Designs for Survivability

The current generation of military tactical aircraft now in development or low rate initial production, e.g., the F–22, F/A–18E/F, V–22, and RAH–66, have strong survivability requirements. The C–17 is the first cargo aircraft with survivability requirements on the original design because its mission requires it to go in harm's way. Both susceptibility and vulnerability are being reduced using the technology that has evolved over the last thirty years. A balanced design between susceptibility and vulnerability issues is achieved using trade–off studies to determine the proper balance for the different aircraft with their different missions. This approach is expected to continue into the future, with an improved capability for conducting integrated survivability assessments and trade–off studies, including tactics, electronic warfare, and signature reduction, developed through the efforts of the JTCG/AS and others.

The designer of future aircraft will face different problems when trying to design survivable aircraft, but the fundamental approches to solving those problems remains the same: reduce susceptibility and reduce

vulnerability. One of the survivability issues on aircraft in design today, as well as those of the future, is the increased use of composite materials, which affect (1) an aircraft's signatures, and hence susceptibility, (2) its structural vulnerability, and (3) the ability to rapidly repair battle damage. Other issues are the possible reduction in the number of engines on an aircraft due to the increase in engine reliability, the trend toward an all or mostly electric aircraft, the significant increase in the reliance on avionics, with digital data buses transporting flight critical signals throughout the aircraft, and the mandated requirement to find a replacement for the current fire extinguishing/fuel tank inerting systems that use a environmentally destructive gas, such as Halon 1301.

Conclusions

Survivability has come a long way in the past thirty years. It is now a combat tested, critical system characteristic, with performance requirements, an enhancement technology, and an assessment methodology. The original goal of the JTCG/AS in 1971 to establish survivability as a design discipline has been achieved. This goal has been reached because the U.S. military Services have learned that aircraft that have not been designed to survive in combat are not effective in combat.

However, there are many changes that are either here now or are looming ahead that can impact the survivability of those aircraft that will be operating in the twenty–first century. The affordability of modern military aircraft has become a major issue, with the potential consequence of less survivable aircraft because of a reliance on relatively inexpensive, off–the–shelf, peacetime designs. The authors believe that when procuring affordable military aircraft, survivability must not 'drop through the crack' because of the elimination of the military specifications and standards that have become a controversial issue. Military aircraft must be designed to fight and survive in wartime, not just to fly in peacetime.

The Department of Defense (DoD) is downsizing, and the availability of people to pay attention to those details that are unique to combat may decline. The authors believe that as DoD downsizes, the resources, personnel, and facilities required for survivability assessment, design, and test and evaluation, must not be downsized below a critical mass. Providing support to program managers, developing new technology, and conducting realistic live fire and operational tests to evaluate susceptibility, vulnerability, and survivability requires an investment for the security of the nation.

Finally, the identification of the specific threats to future aircraft is difficult, at best, which may lead some people to the conclusion that there are no serious threats to contend with; and if there are no threats, survivability can be ignored. The authors believe that history has shown, and will continue to show, that there is always another threat waiting just around the corner. Having aircraft available that are both lethal and survivable will help to dissuade potential adversaries from any foolish action.

In conclusion, the authors believe that if the survivability community continues to work together in the future, as it has in the past, then survivability as a design discipline will continue to mature, and the U.S. military aircraft of the future will be more survivable and thus more effective.

References

1. Ball, Robert E., The Fundamentals of Aircraft Combat Survivability Analysis and Design, AIAA, New York, 1985.

2. Atkinson, D. B., Blatt, P., et al., "Design of Fighter Aircraft for Combat Survivability," Paper 690706, Society of Automotive Engineers, National Aeronautic and Space Engineering and Manufacturing Meeting, Los Angeles, California, Oct. 6–10, 1969.

3. Price, A., The Bomber in World War II, Charles Scribner's Sons, New York, 1979.

4. Price, A. "The History of US Electronic Warfare, The Years of Innovation – Beginnings to 1946," Vol 1, Association of Old Crows, 1984.

5. Price, A. "Instruments of Darkness, The History of Electronic Warfare," Macdonald and Jane's, London, 1977.

6. Wertenson, F., "Effect of Gunfire on Aircraft," Aero Digest, June, 1955.

7. Boies, Michael A., "Evolution of Survivability Technology of Combat Aircraft from World War II to the Present," MS Thesis, Naval Postgraduate School, March, 1980.

8. Taylor, F. R. and Schonowski, J., "Application of Designs to Improve Aircraft Flight Control Survivability," Proc. of the Sym. on Vulnerability and Survivability, ADPA, Cornado, California, October 21–23, 1975.

9. "Air Force Pilot Tests A–10's Toughness in Battle," Aviation Week & Space Technology, Aug. 5, 1991.

10. "Air–10 'Warthogs' Damaged Heavily In Gulf War But Survived to Fly Again," Aviation Week & Space Technology, Aug. 5, 1991.

11. Caravasos, N., "Survivability of the Boeing UH–61A Helicopter," Proceedings fo the 2nd American Defense Preparedness Association Symposium on Vulnerability and Survivability, Vol. 1, Oct. 1976.

12. Wagner GEN L. C., "BLACKHAWK Comes of Age," Army Aviation, June 30, 1989.

13. Arrighi, J. A., "Survivability Design Features Incorporated in the A–10A Close Air Support Weapon System," Proc. of the Third Biennial Aircraft Survivability Symposium, Vol I, Naval Postgraduate School, Monterey, California, 30 Oct – 2 Nov, 1978.

14. Mihalik, J. T., "Invulnerable, Unsusceptible, and Survivable," Naval Institute Proceedings, July, 1991.

15. Foulk, J. B., "Survivability of the Army/Sikorsky YUH–60A Helicopter," Preprint No. 1011, 32nd Annual National V/STOL Forum of the American Helicopter Society, Washington, D.C., May, 1976.

16. National Research Council (NRC), Committee on Weapons Effects on Airborne Systems, "Vulnerability Assessment of Aircraft, A Review of the Department of Defense Live Fire Test and Evaluation Program," Air Force Studies Board, Commission on Engineering and Technical Systems, National Academy Press, Washington, D.C., 1993.

Table 1 Some Typical Survivability Enhancement Features

Speed and altitude	Maneuverability/agility	Chaff and flares
Fire/explosion protection	Terrain following	Hydraulic ram protection
Self–repairing flight controls	No fuel adjacent to air inlets	Rugged structure
Lethal stand–off weapons	Self–defense missiles and guns	Good target acquisition capability
Night–time capability	Crew situational awareness	Threat warning system
More than one engine – separated	Fighter escort	Mission planning system
Low signatures or observables	Crew skill and experience	Antiradiation weapons
Tactics	Nonflammable hydraulic fluid	Armor
On–board electronic countermeasures	Redundant and separated hydraulics	Stand–off electronic countermeasures

Table 2 The Twelve Survivability Enhancement Concepts [1]

Susceptibility Reduction	Vulnerability Reduction
Threat warning – missile approach warning receiver	Component redundancy (with separation) – two widely separated engines
Noise jamming and deceiving – ALQ–126B on–board ECM	Component location – no fuel adjacent to air inlets
Expendables – flares	Passive damage suppression – explosion suppression foam in fuel tank ullages
Signature reduction – shaping to reduce the radar signature	Active damage suppression – fire detection and extinguishing in engine bays
Threat suppression – anti–radiation missile	Component shielding –armored seats
Tactics, performance, & crew skill & experience – terrain following	Component elimination/replacement – nonflammable hydraulics

Table 4 A List of System Damage–Caused Failure (Kill) Modes [1]

Fuel	Propulsion	Flight Control
Fuel supply depletion	Fuel ingestion	Disruption of control signal path
In-tank fire/explosion	Foreign object ingestion	Loss of control power
Void space fire/explosion	Inlet flow distortion	Loss of aircraft motion data
Sustained exterior fire	Lubrication starvation	Damage to control surfaces and hinges
Hydraulic ram	Compressor case perforation or distortion	Hydraulic fluid fire
Power Train and Rotor Blade/Propeller	Combustor Case perforation	
Loss of lubrication	Turbine section failure	Structural
Mechanical/structural damage	Exhaust duct failure	Structure removal
	Engine controls and accessories failure	Pressure overload
		Thermal weakening
Electrical Power		Penetration
Severing or grounding	Crew	
Mechanical failure	Injury, incapacitation, or death	Avionics
Overheating		Penetrator/fragment damage
	Armament	Fire/explosion/overheat
	Fire/Explosion	

Table 3 New U.S. Military Aircraft Starts (Approximate Dates)

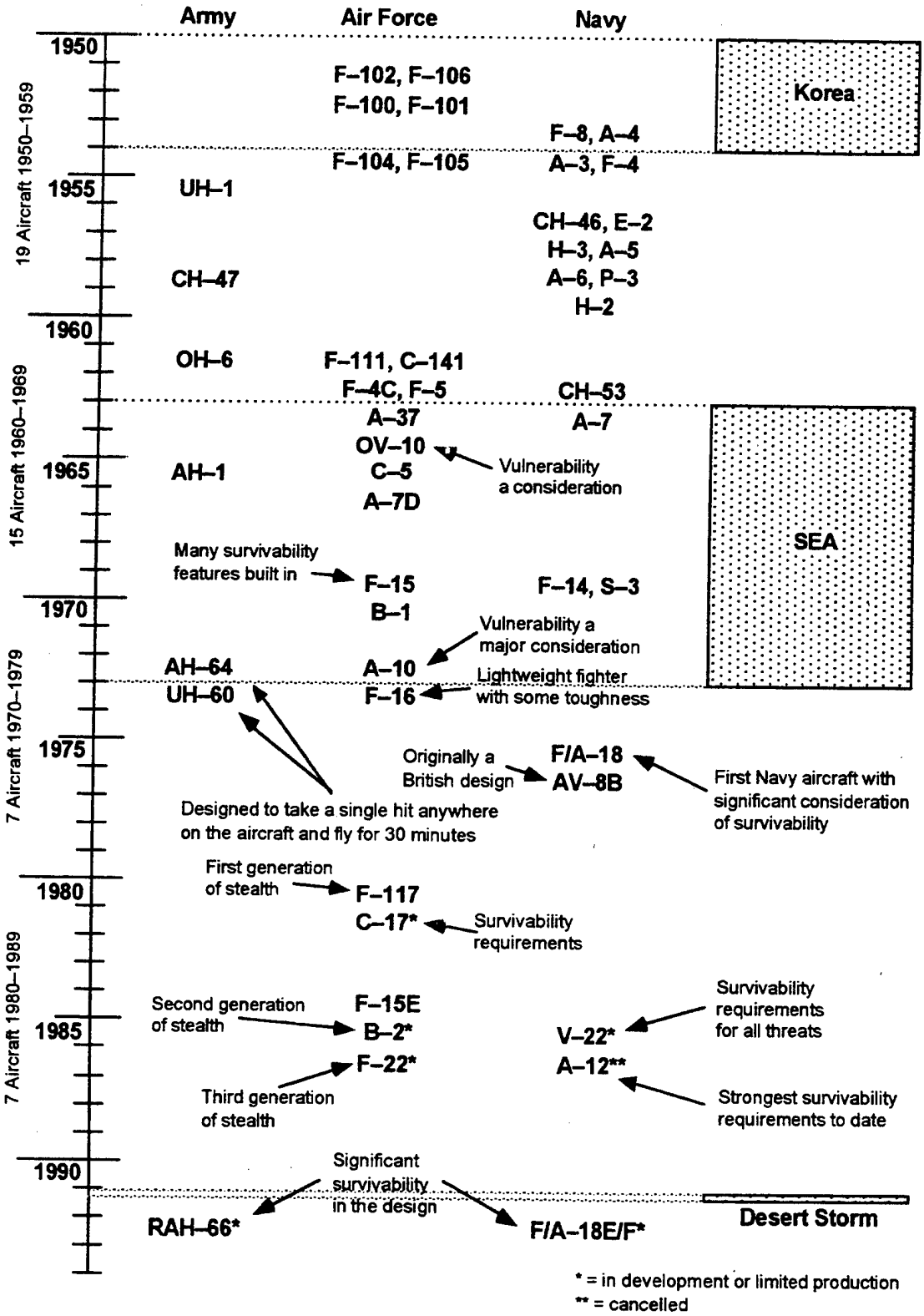

Table 5 Some Vulnerability Reduction Features used on WW II Aircraft

Armor plating	Self-sealing fuel tanks
Location of cooling and lubrication components	Fuel venting and void space filling
Bullet-proof glass canopy	Fuel tank ullage inerting
Rugged construction	Fuel tank depressurization
Air–cooled engines	Fire extinguishing (crew and engines)
Emergency extension of landing gear	Fuel tank cross–over lines with shut–off valves
Back-up propeller feathering subsystem	Firewalls

Table 6 Some Vulnerability Reduction Features used on SEA Aircraft

Orange foam in fuel tanks	Rerouted hydraulics in wings
Back-up flight controls and surfaces	Added APU
Stabilator lock	Independent, self-sealing fuel feed tanks and lines
Bomb bay fire extinguishers	Ram air emergency power package
Improved self-sealing fuel tanks	Emergency pressurization for fuel transfer
Steel liners added to aluminum hydraulic barrels	Armor

Table 7a Some Vulnerability Reduction Features used on the Fuel System of the A–10A, F/A–18A, and UH–60A Aircraft

A–10A	F/A–18A	UH–60A
Kill Mode: Fuel Supply Depletion		
Two self–sealing feed tanks located away from ignition sources	Two self–sealing feed tanks located away from ignition sources	Two self–sealing/crashworthy tanks located away from ignition sources
Short, self–sealing feed lines	Short, self–sealing feed lines	Short, self–sealing feed lines
Wing fuel used first	Wing fuel used first	Engine–mounted suction pumps
Most fuel lines located inside tanks	Most fuel lines located inside tanks	Cross feed capability
Cross feed capability located within tanks	Cross feed capability	
Redundant feed flow	Backup pump and redundant feed	
Kill Mode: Fire/Explosion		
Two self–sealing feed tanks located away from ignition sources	Two self–sealing feed tanks located away from ignition sources	Two self–sealing/crashworthy tanks located away from ignition sources
Short, self–sealing feed lines	Short, self–sealing feed lines	Short, self–sealing feed lines
Most fuel lines located inside tanks	Most fuel lines located inside tanks	Engine–mounted suction pumps
Open cell foam in all tanks	Open cell foam in wing tanks	Closed cell foam around tanks
Closed cell foam in dry bays around tanks	Closed cell foam under two fuselage tanks	
Draining and vents in vapor areas		
Kill Mode: Hydraulic Ram		
Minimum fuel in wings during combat	Minimum fuel in wings during combat	Crashworthy fuel tanks also hydrodynamic tolerant
	Damage control design of short length of inlet next to fuel tank	

Table 7b Some Vulnerability Reduction Features used on the Propulsion System of the A–10A, F/A–18A, and UH–60A Aircraft

A–10A	F/A–18A	UH–60A
Kill Mode: Loss of Thrust		
Two widely separated engines	Two engines	Two widely separated engines
Dual fire walls	Fire walls between engine, AMAD, and APU	Titanium fire walls
Fail–active fire detection with two shot fire extinguishing	Fire detection and one shot extinguishing system	Fire detection with two shot fire extinguishing
Engine case armor	Blade containment for fan, compressor, and turbine	Widely separated engine to transmission input modules
Separation between fuel tanks and air inlets	Inlet duct/fuel tank hydrodynamic ram damage control	No fuel ingestion
One engine out capability	One engine out capability	Good one engine out capability

Table 7c Some Vulnerability Reduction Features used on the Flight Control System of the A–10A, F/A–18A, and UH–60A Aircraft

A–10A	F/A–18A	UH–60A
Kill Modes: Disruption of Control Signal Path and Loss of Control Surfaces		
Two independent, separated mechanical flight controls with mechanical disconnects	Two flight control computers with four separated electrical signal lines to actuators	Two independent, separated mechanical flight controls with mechanical disconnects
Two rudders and elevators	Backup mechanical controls to tail	Tail rotor is stable if pitch rod is severed
Armor around stick where redundant controls converge		Spring drives tail rotor blades to fixed pitch setting if control signal is lost
		Controls are ballistically tolerant
Kill Modes: Loss of Control Power and Hydraulic Fluid Fire		
Two independent, separated hyd power subsystems	Two independent, separated hyd power subsystems with two circuits per subsystem	Two independent, separated, and shielded hyd power subsystems
A/C can be controlled without hyd power with mech controls and dual, electrically powered trim actuators	Rip–stop actuators	Third electrically driven backup can power either or both primary subsystems with quick disconnects and leak isolation valves
Less flammable hyd fluid	Less flammable hyd fluid	Less flammable hyd fluid
	Reservoir level sensing	

Table 7d Some Vulnerability Reduction Features used on the Air Crew System of the A–10A, F/A–18A, and UH–60A Aircraft

A–10A	F/A–18A	UH–60A
Kill Modes: Incapacitation or Death		
Pilot sits in a titanium/aluminum armor bathtub		Crashworthy armored seats and retention system
Spall shields between armor and pilot		Shatterproof cockpit window
Bullet resistant windscreen		Minimum–spall materials used in cockpit
Spall resistant canopy side panels		Kevlar armor to stop HEI fragments

Table 7e Some Vulnerability Reduction Features used on the Rotor Blade & Drive Train of the UH–60A Aircraft

UH–60A		
Kill Modes: Loss of Lubrication and Structural Damage		
Main Transmission	*Main rotor*	*Tail Rotor Drive System*
Modularized transmission eliminates exposed high speed shafts and multiple lube systems with exposed oil components	Rotor blades tolerant to HEI projectiles	Large vertical tail with log boom provides anti–torque in forward flight
Operates more than one hour after loss of all oil	Elastomeric hub with no lube, tolerant to HEI projectiles	Shaft supports provide damping for damaged shaft
Noncatastrophic failure allows autorotation		No bearings or lube in cross–beam rotor
		Tail rotor blades ballistically tolerant
		Damaged parts thrown away from the helicopter

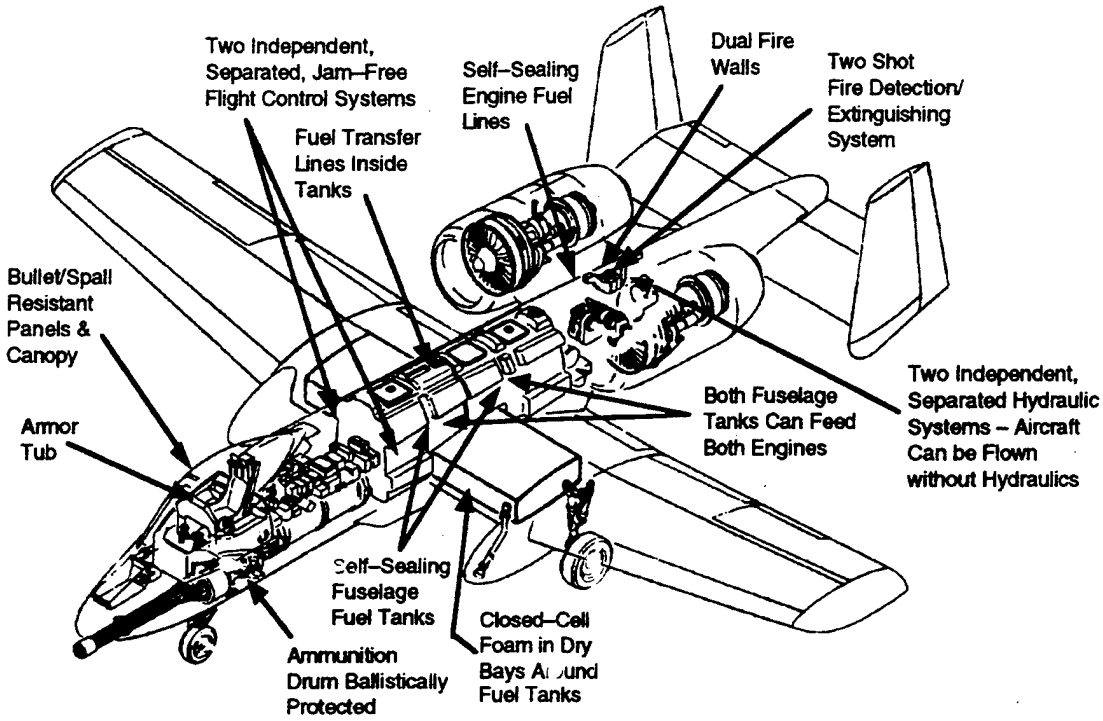

Fig. 1 Some Vulnerability Reduction Features on the A–10A Thunderbolt II [13]

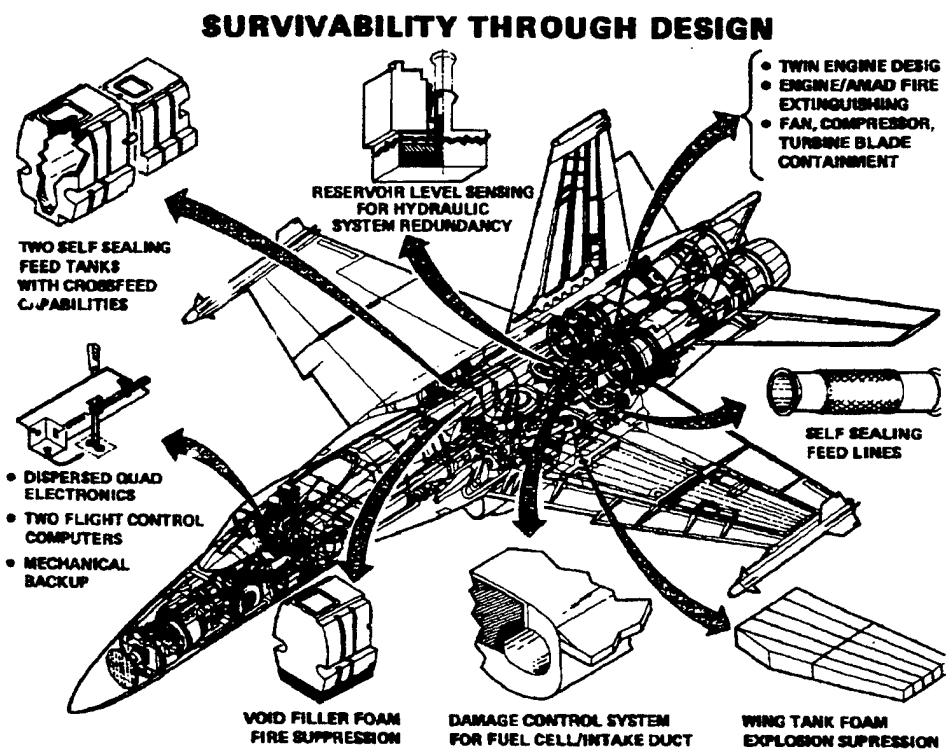

Fig. 2 Some Vulnerability Reduction Features on the F/A–18A (Courtesy of McDonnell Aerospace)

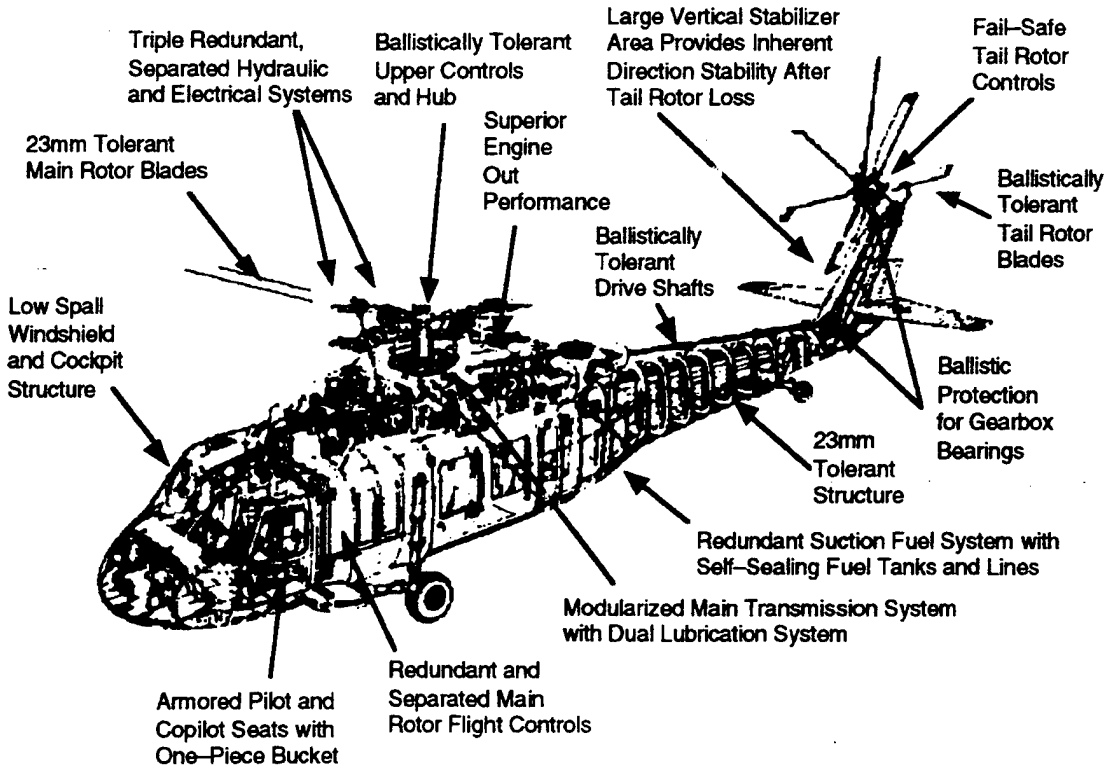

Fig. 3 Some Vulnerability Reduction Features on the UH–60A (Courtesy of Sikorsky Aircraft Division)