SESSION PAPERS

OVERVIEW & VISION

STANDARD TEST EQUIPMENT PLATFORM (MODULES)

GWTS UPGRADE

COMMON ATS ARCHITECTURE

HARDWARE | SOFTWARE

AIRCRAFT INTERFACE EXAMPLE

MISSILE AUR ATS EXAMPLE

Raytheon

Standard Missile All Up Round (AUR) Testing on a Common Munitions Standard Test Equipment Platform

John J. Lohse

Raytheon Company

Test Systems Design Center

NDIA

Systems Engineering and Supportability Conference

San Diego, CA

25 October 2000

Introduction

Raytheon

- **Standard Missile is the Navy's Premier Surface to Air and Surface to Surface Missile**
- **Standard Missile All Up Round (AUR) Test Set (MK612 Guided Missile Test Set)**
  - **Successfully Deployed Since 1978**
    - **25 MK612s Deployed**
    - **Domestic and Foreign**

Introduction

Raytheon

- **A Next Generation AUR Test Set is being considered to support Standard Missile well into the 21st century**
  - **Must be robust to support a wide variety of stimulus and measurement**
    - **Analog**
    - **Microwave (including target generation)**
    - **Infrared (IR)**
    - **High and low speed digital data**
    - **Pitch and roll motion**

Introduction

Raytheon

- **Next Generation AUR Test Set Possibilities**
  - **Refurbish existing MK612s and add additional capability as needed**
  - **Develop a new Standard Missile unique test system**
  - **Develop a Standard Missile Operational Test Program Set (OTPS) to be used in conjunction with a Common Munitions Standard Test Equipment Platform (CMSTEP) concept**

Introduction

Raytheon

Standard Missile OTPS and CMSTEP Solution

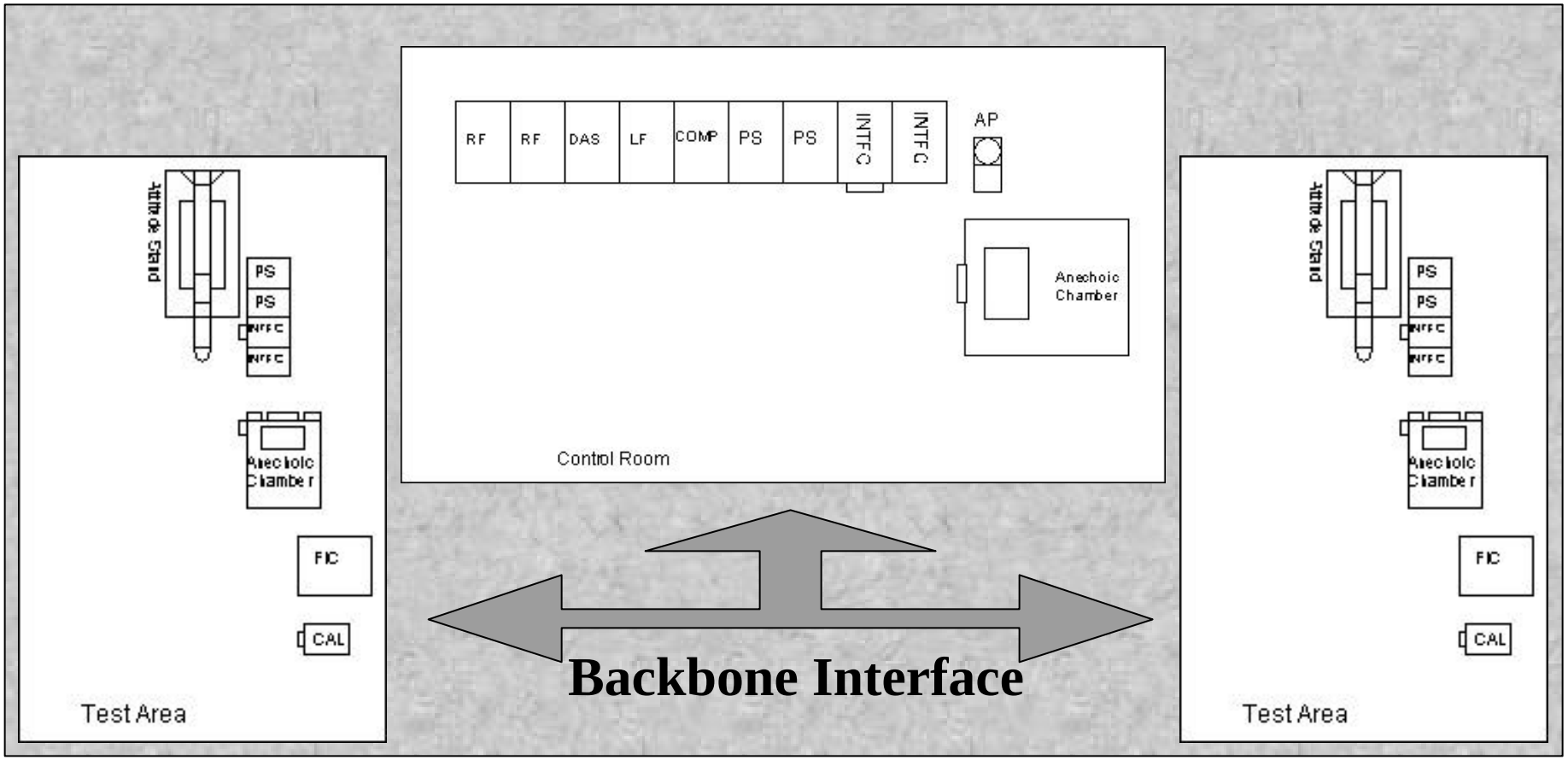

CMSTEP Concept

Raytheon

CMSTEP Components

Controller Subsystem

Radio Frequency (RF) Subsystem

Low Frequency (LF) Subsystem

Power Subsystem

Data Acquisition Subsystem

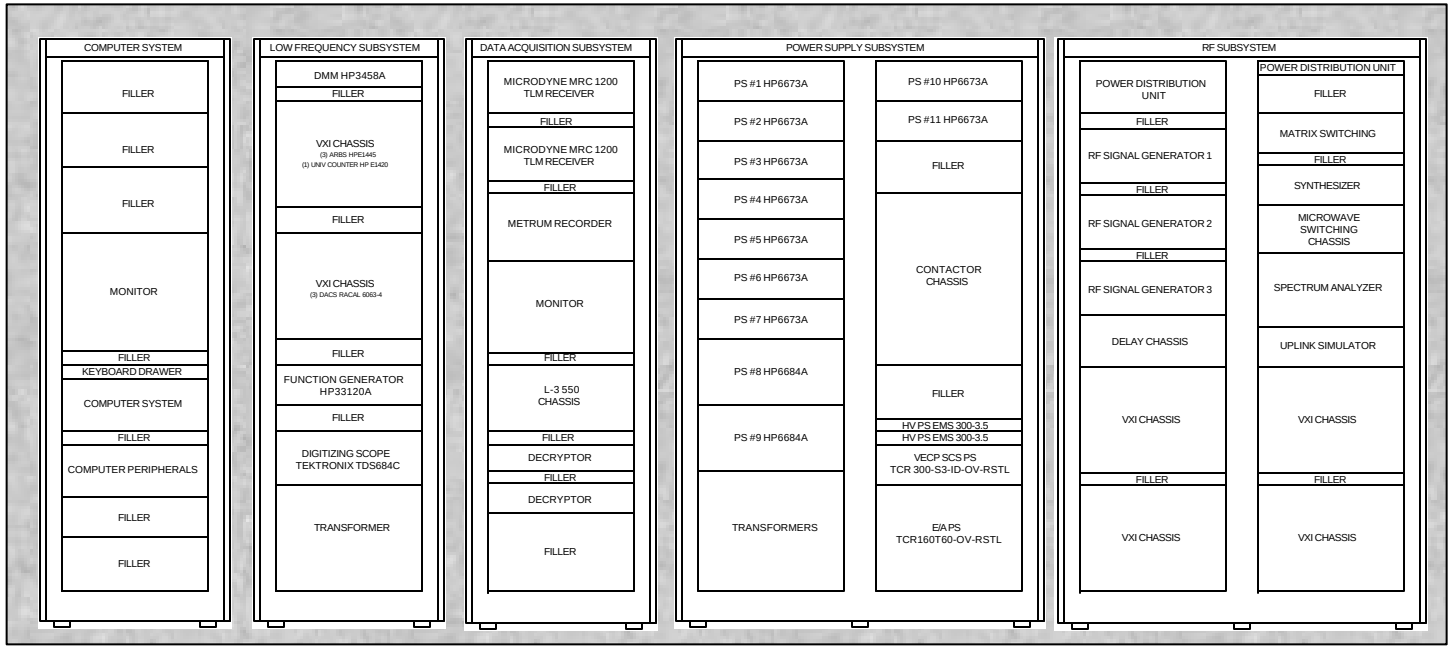

CMSTEP Concept

Raytheon

- **Controller Subsystem**
  - **PC Based System Controller**
    - **Windows 2000**
    - **C++ application language**
    - **Interactive instrument displays**
  - **Monitor**
  - **Printer**
  - **Misc. User Peripherals**
  - **Remote Terminal**

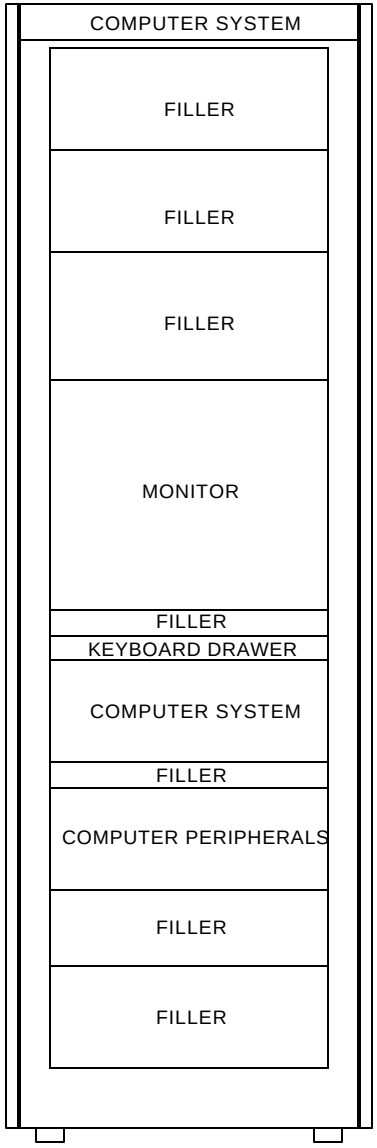

CMSTEP Concept

Raytheon

- **Low Frequency Subsystem**
  - **LF Stimulus**
    - **Function Generator**
    - **Arb. Waveform Generator**
    - **Digital to Analog Converters**
  - **LF Measurement**
    - **Digital Multimeter**
    - **Digitizing Oscilloscope**
    - **Universal Counter**
  - **LF Switching**

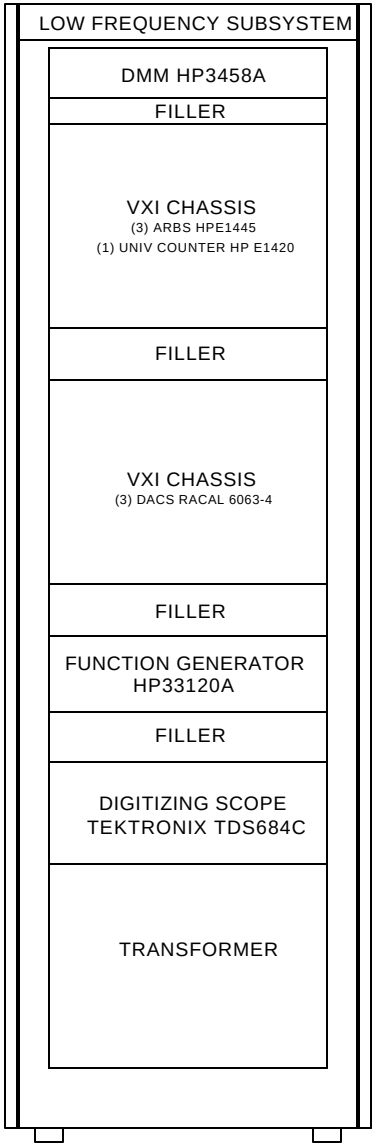

CMSTEP Concept

Raytheon

- **Data Acquisition Subsystem**
  - **Captures Digital/Analog Data**
    - **High Speed**
    - **Real Time**
    - **Multi-channel**
    - **Multi-function**
  - **Processes Telemetry Data**
    - **RF Receivers**
    - **Real Time**
  - **Post Test Analysis Tool**

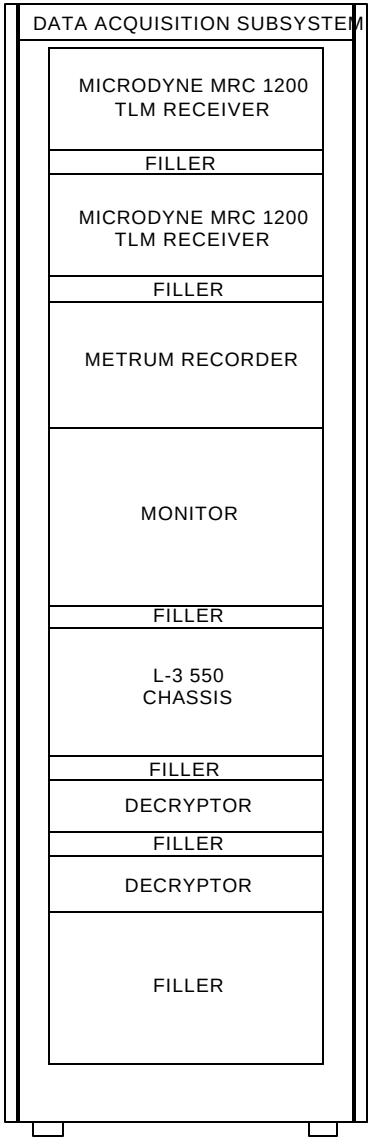

CMSTEP Concept

Raytheon

- **Power Subsystem**
  - **Standard Missile Specific**
    - **15 UUT Power Supplies**
    - **AC and DC**
    - **Family of DC Supplies**
    - **Reconfigurable**

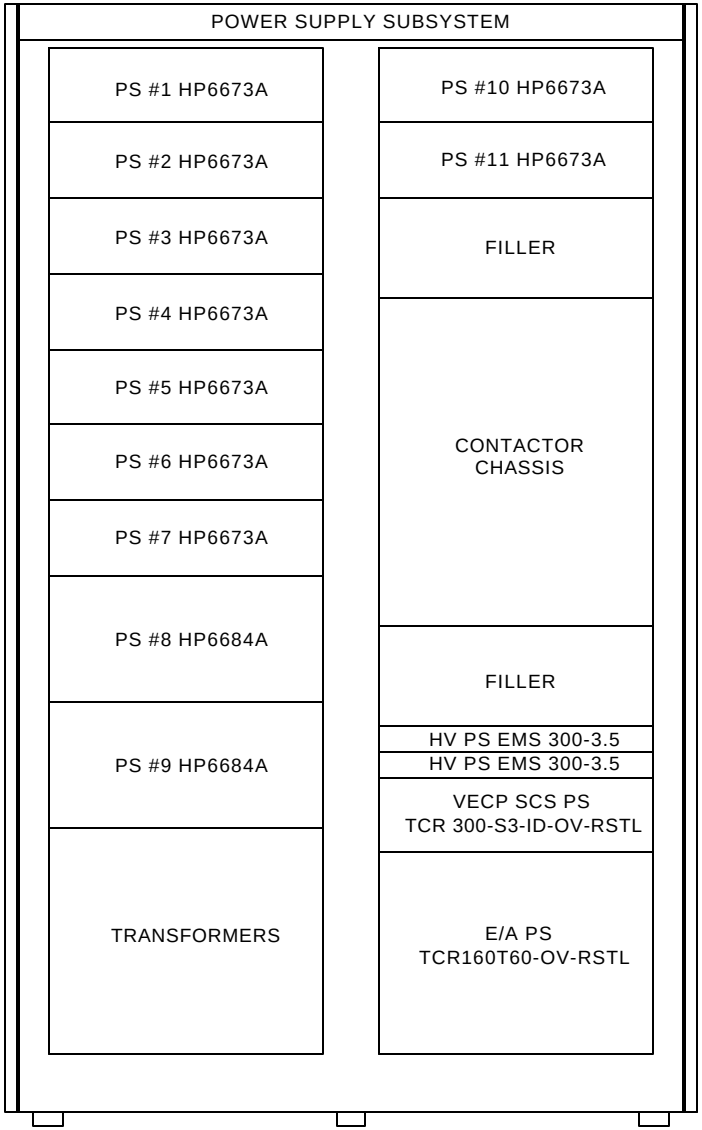

CMSTEP Concept

Raytheon

- **RF Subsystem**
  - **RF Stimulus**
    - **RF Signal Generators**
    - **Arb. Waveform Generators**
  - **RF Measurement**
    - **Spectrum Analyzer**
    - **Microwave Counter**
    - **Power Meters**
  - **RF Signal Conditioning**
    - **Delays/Combiners/etc.**
  - **RF Switching**

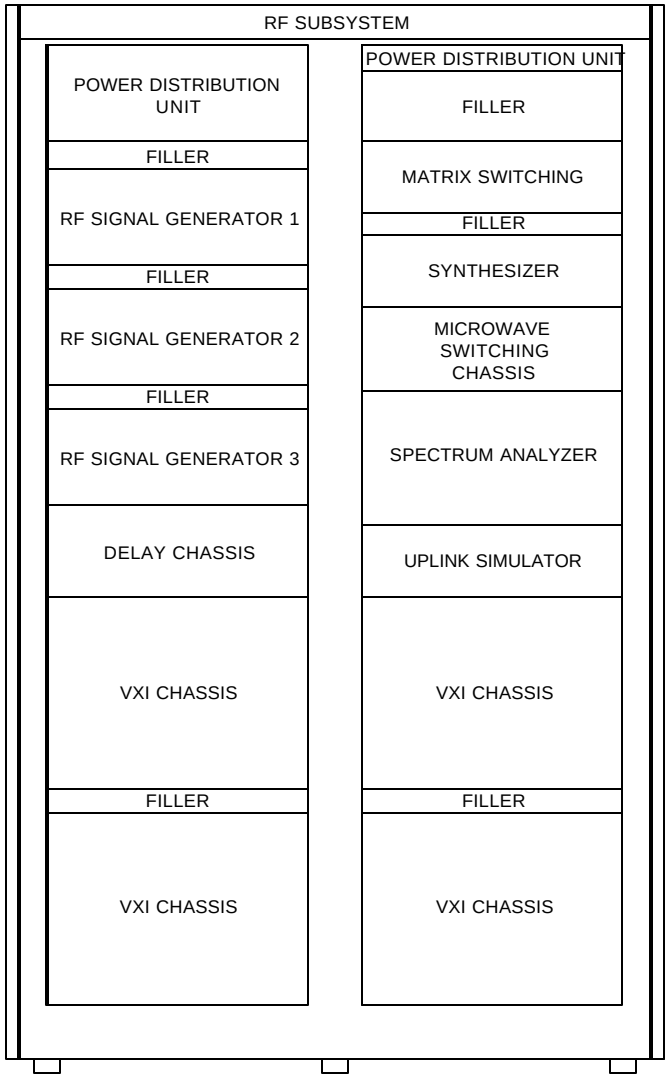

OTPS Concept

Raytheon

- **OTPS Components**
  - **UUT/TE Interface Subsystem**
  - **RF Enclosure**
  - **Motion Stand**
  - **OTPS Calibration Cart (optional)**

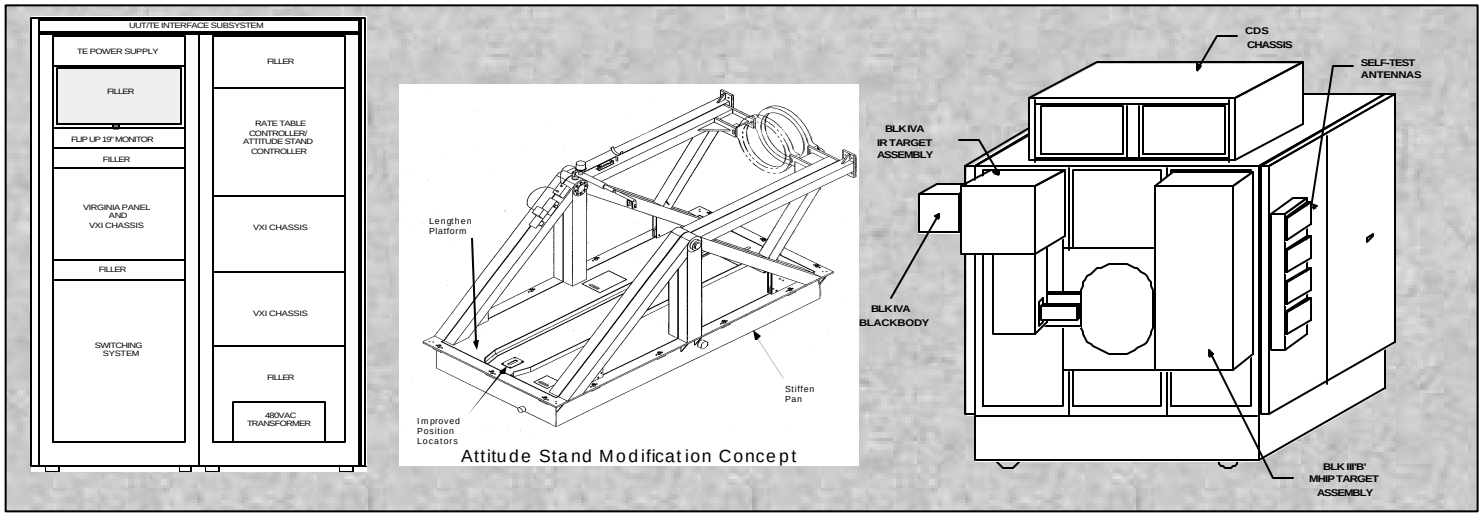

OTPS Concept

Raytheon

- **UUT/TE Interface Subsystem**
  - **Patch Panel Interface**
    - **Interface Test Adapter/Cables**
  - **Switching**
    - **Existing MK612 Mod 4 Switching**
  - **Unique Standard Missile Subsystems**
    - **Custom Designed Circuits for Legacy Test**

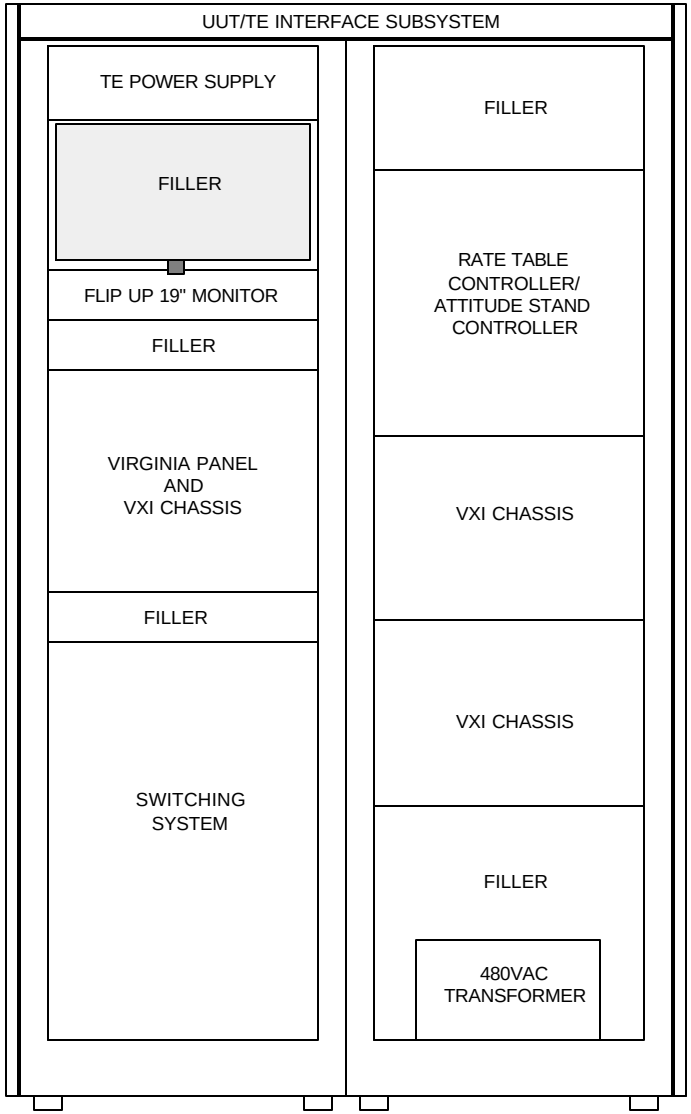

OTPS Concept

Raytheon

- **RF Enclosure**
  - **Portable Anechoic Chamber**
    - **RF and IR Targets**
    - **Antenna Couplers**
  - **Based on Current Chamber**
    - **w/ Improved Alignment**

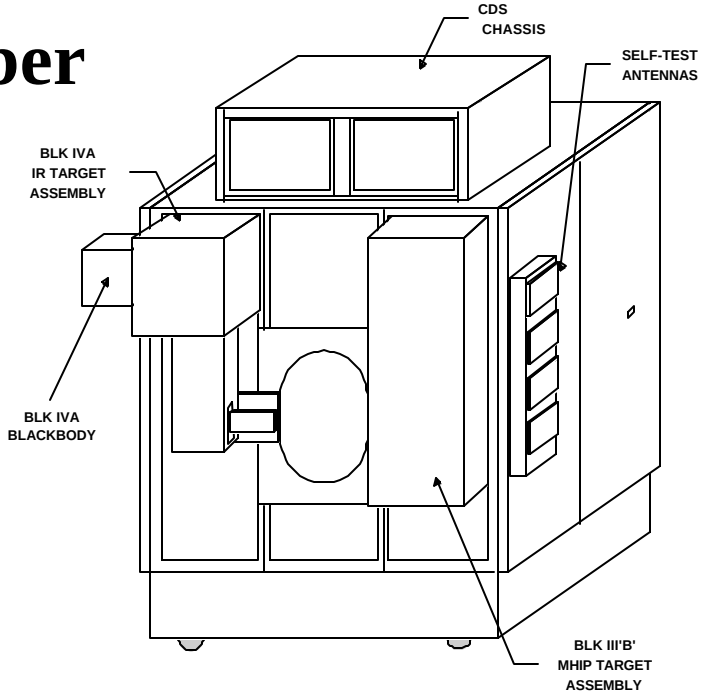

OTPS Concept

Raytheon

- **Motion Stand**
  - **Mechanical Cradle**
    - **Missile restraint**
    - **Pitch and Roll Motion**
  - **Based on Current Cradle**
    - **w/ Improved Alignment**

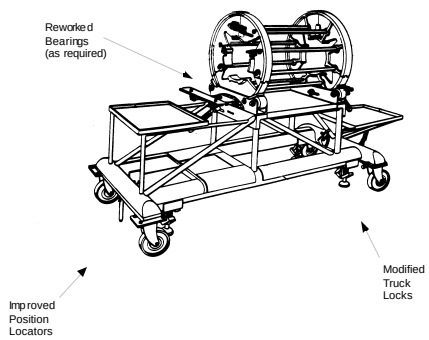

Roll Stand Modification Concept

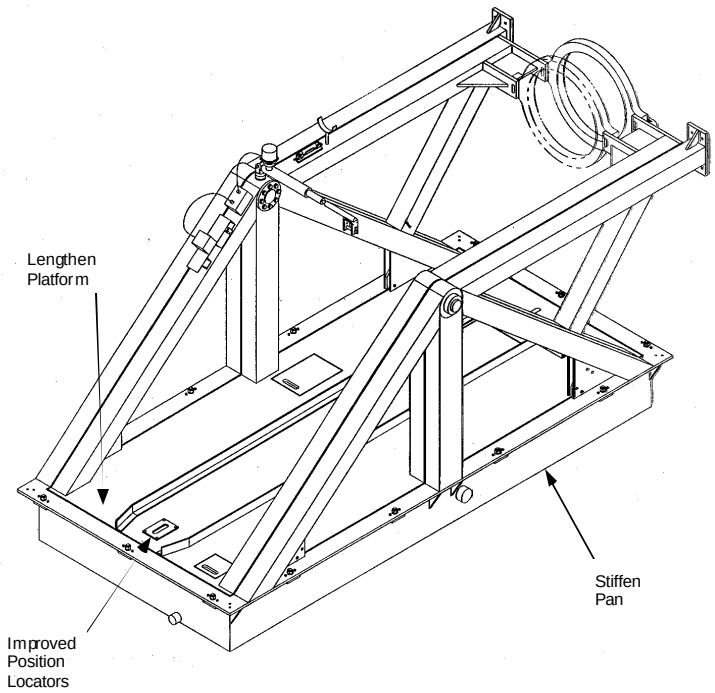

Attitude Stand Modification Concept

OTPS Concept

Raytheon

- **OTPS Calibration Cart (Optional)**
  - **Houses Calibration Standards**
    - **Calibrate OTPS Assets**
    - **Perform OTPS System Level Verification**
  - **Automated Calibration Procedures**

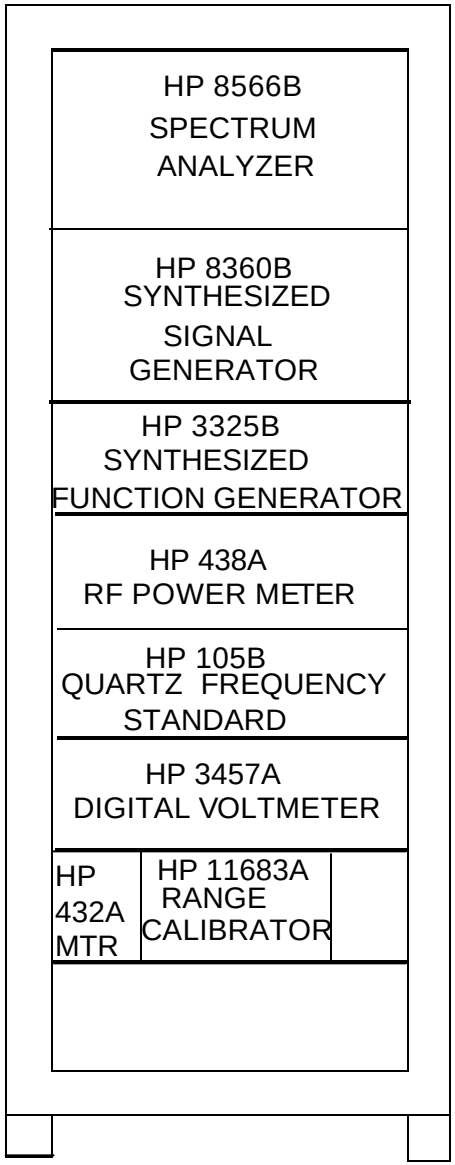

Extended Test Architecture

Raytheon

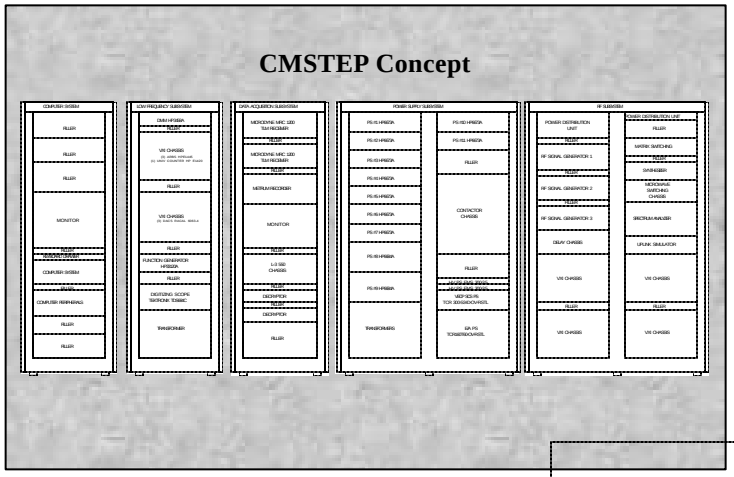

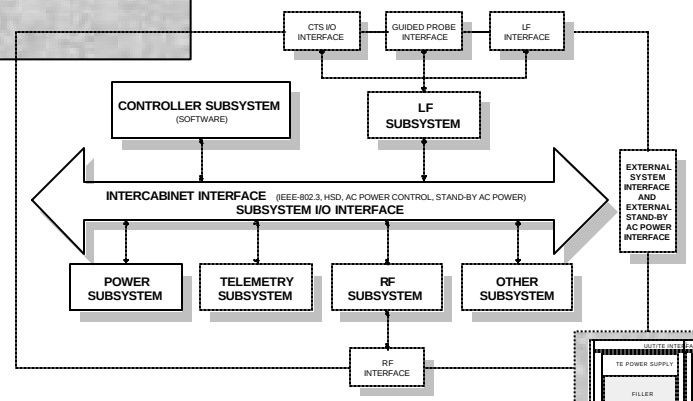

OTPS

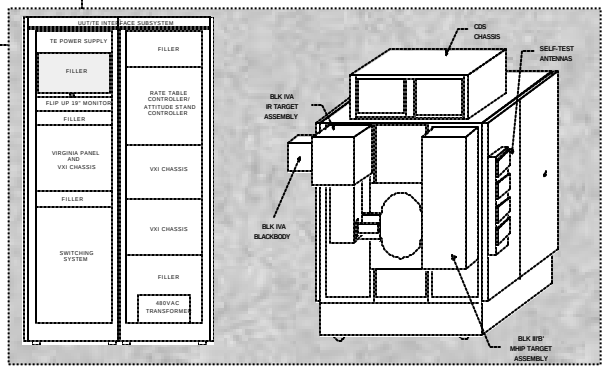

Backbone Interface Extends Architecture into OTPS

Extended Test Architecture

Raytheon

- **Common Munitions Test Architecture extended from CMSTEP to OTPS**
  - **Basic hardware, software, and maintenance building blocks which mirror one another**

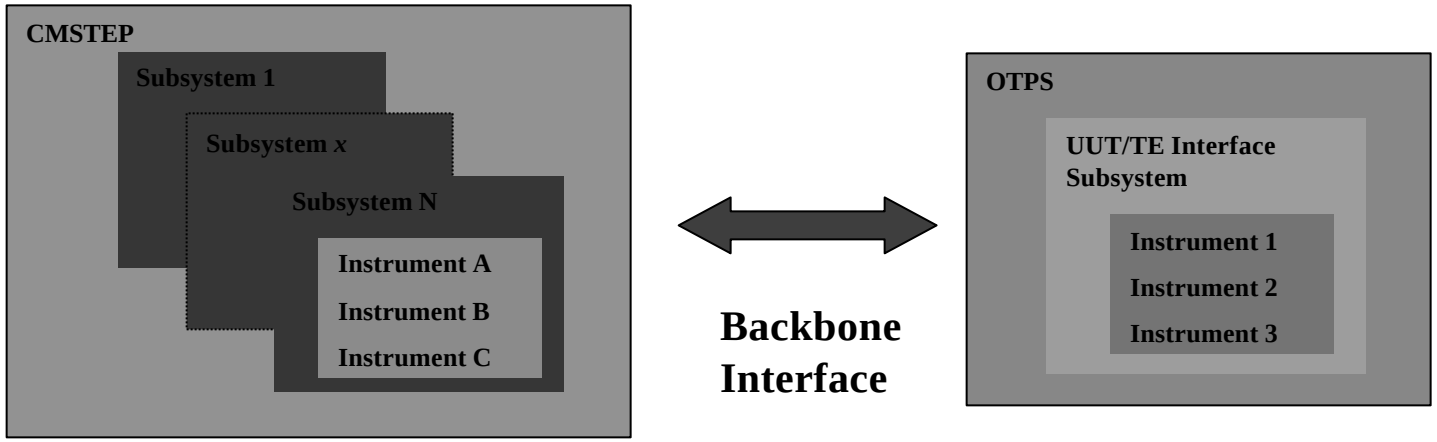

Extended Test Architecture

Raytheon

- **OTPS Hardware**
  - **COTS VXI Instrumentation**
  - **Common Internal and External Interfaces**
- **OTPS Software**
  - **Layered Software Approach**
- **OTPS Maintenance**
  - **Self-test Ascertains Health Status of OTPS**
    - **OTPS Diagnostics and Repair Verification**
  - **Calibration Verifies OTPS Assets and System Level Performance**

Conclusion

Raytheon

- **A Next Generation AUR Test Set is needed to support Standard Missile in the Future**
- **A Viable Option for the Next Generation AUR Test Set would be a new CMSTEP with a Standard Missile OTPS**
- **CMSTEP would be based on the Common Munitions Test Architecture**
  - **The Architecture would be extended into the OTPS**