HIGHLY INTEGRATED FIRING MODULE

Mr. Tom Nickolin
Manager Advanced Technology
KDI Precision Products, Inc.

Mr. Jim Denny
Senior Engineer
China Lake

REYNOLDS SYSTEMS INC.

Mr. Tom Reynolds
President
Reynolds Systems

Mr. John Cole
President
Silicon Designs

OUTLINE

- Participants
- Ultimate Objective
- Critical Components
- Solid-State Switch
- Test Data
- Summary

PARTICIPANTS
FOUR PARTY COOPERATIVE RESEARCH AND DEVELOPMENT AGREEMENT (CRADA)

- Participants
  - Mr. Jim Denny, China Lake
  - Mr. John Cole, Silicon Designs
  - Mr. Tom Reynolds, Reynolds Systems
  - Mr. Tom Nickolin, KDI Precision Products

ULTIMATE OBJECTIVE

- To Develop a Highly Integrated Firing Module
  - Small
  - Reliable
  - Low Cost
  - Modular

CRITICAL COMPONENTS

- EFI / LEEFI
- Capacitor
- Insensitive Explosive Material
- High Voltage Switch

EFI / LEEFI

- Traditional EFI
  - Kapton Base
  - Etched Copper Bridge
  - 2-3 kv Operating Voltage

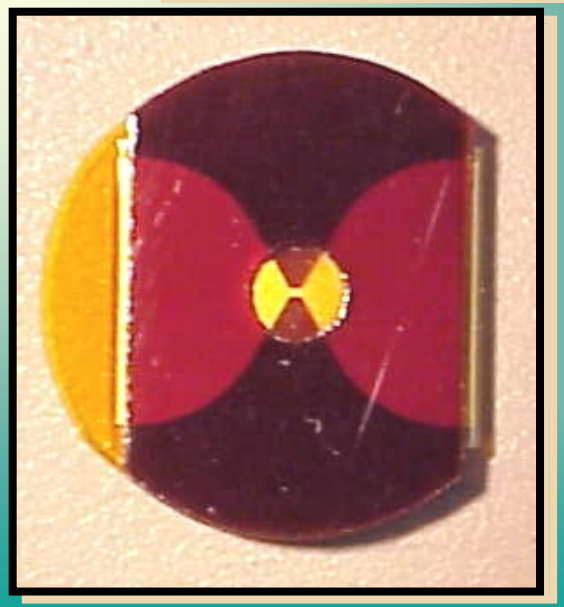

REYNOLDS SYSTEMS INC.

EFI / LEEFI

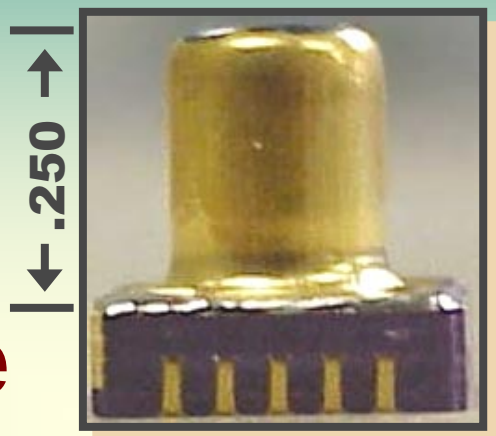

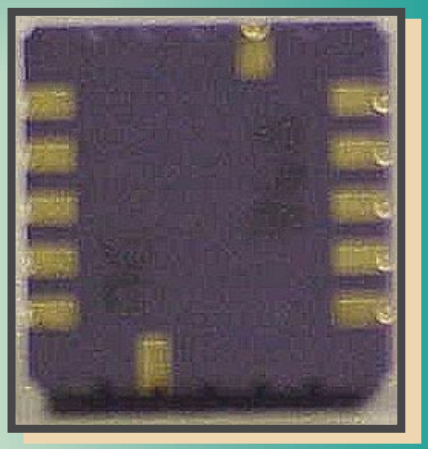

LCC - 20

- **LEEFI**
  - Ceramic Base
  - Vapor Deposited Bridge
  - Hermetic Seal
  - Lower Operating Voltages
  - Lower Value Capacitor

REYNOLDS SYSTEMS INC.

CAPACITORS

- Performance
  - Capacitance
  - Operating Voltage
  - Inductance / ESR
  - Number Firings

Engineering Trade-Off's

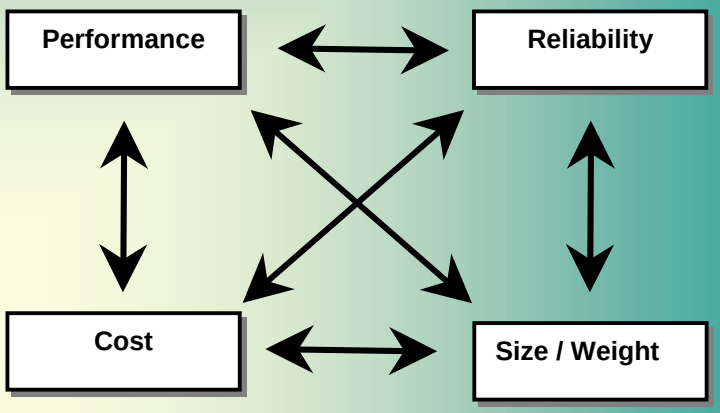

- Major Influences
  - Reduced Energy Requirements
  - Technology Advancements

EXAMPLE CAPACITORS

.165 µF 3kv - Patriot ESAD

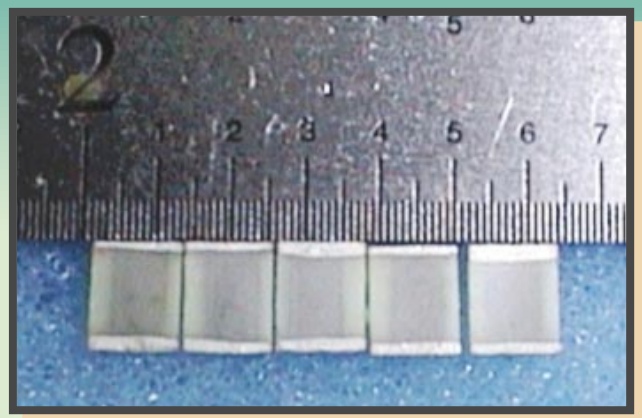

.1 µF 1.5 kv - In Development

.13 µF 2.5 kv - AIM-9X

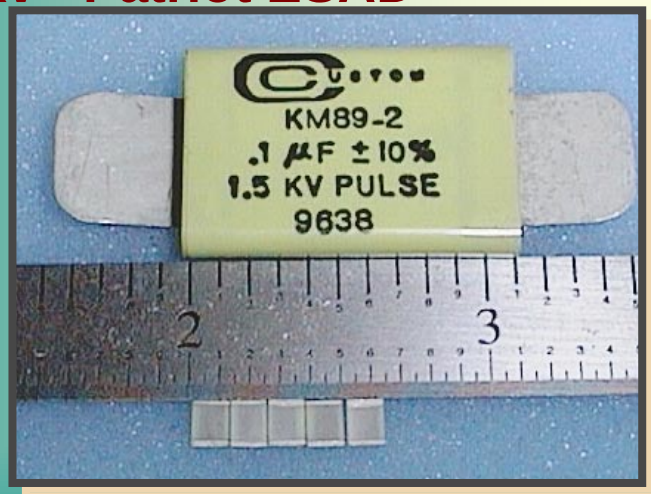

.1 µF 1.5 kv

.1 µF 3.0 kv - Swiss Dragon

REYNOLDS SYSTEMS INC.

INSENSITIVE EXPLOSIVE MATERIAL

- HNS- IV
  - Most Popular
  - Accepted By MIL-STD-1316D
  - Not Certified
  - High Cost

INSENSITIVE EXPLOSIVE MATERIAL

- Alternative Energetic Material
  - Developed By China Lake / RSI
  - Nearly Qualified
  - Material of Choice for the Highly Integrated Firing Unit
  - Separate NDIA Paper

HIGH VOLTAGE SWITCH

- Spark Gap
  - Gas Filled
  - Vacuum

- Explosive Kapton Switch

HIGH VOLTAGE SWITCH

- Vacuum Relay
- Hybrid
- Solid-State Devices
  - MOSFET
  - NMCT

NMCT

- 'N' Channel MOS Controlled Thyristor
  - Originally Developed By Harris Semiconductor
  - Product Sold To Silicon Power Corp.
  - Excellent Test Results
  - Separate Presentation By Mr. Kwong Chu - Sandia

MOSFET

- Commercially Available
- Lower Cost

MOSFET

- Application Is Outside Bounds Defined by Data Sheet
  - Voltage Rating, Sufficient
  - Pulse Current, Too Low
  - On Resistance, Too High
  - Switching Speed, Too Slow

MOSFET PARASITIC ELEMENTS

- C_{ISS} Capacitance - Gate to Source
  - Large for Power MOSFETS (5,000 - 10,000 PF)
  - Reduces Turn On Rate
  - Requires Low Impedance Drive Circuit

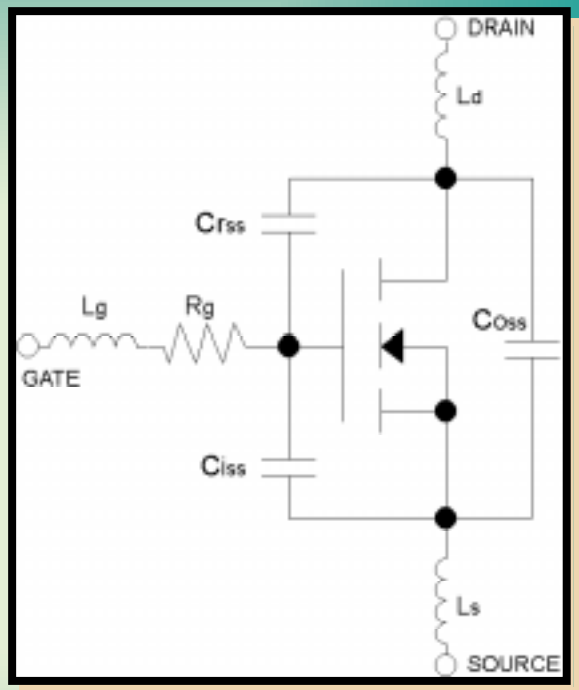

MOSFET PARASITIC ELEMENTS

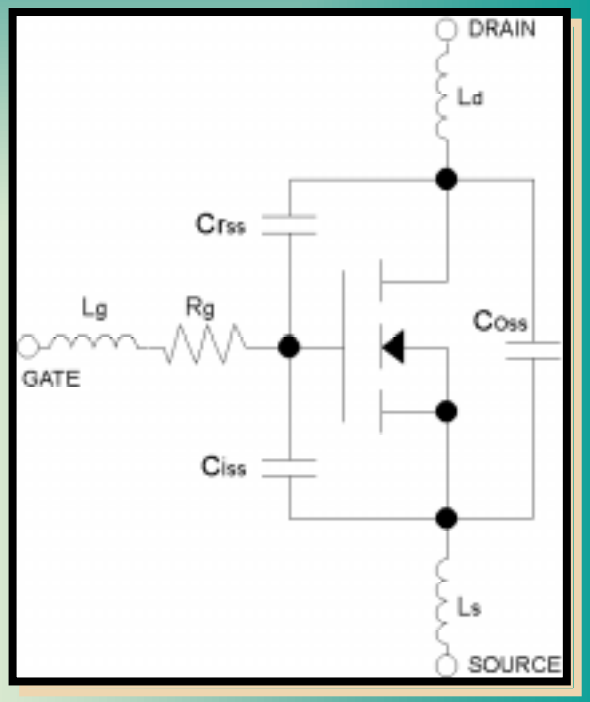

- C_{RSS} Capacitance - Drain to Gate
  - Couples *dv/dt* at Drain, to the Gate
  - Degenerative to Turn On
  - Potential to Damage Gate

MOSFET PARASITIC ELEMENTS

- L_{ss} Source Inductance
  - Degenerative to Turn On
  - Adds to Overall Loop Inductance
  - Internal to Package
  - Potential to Damage Gate

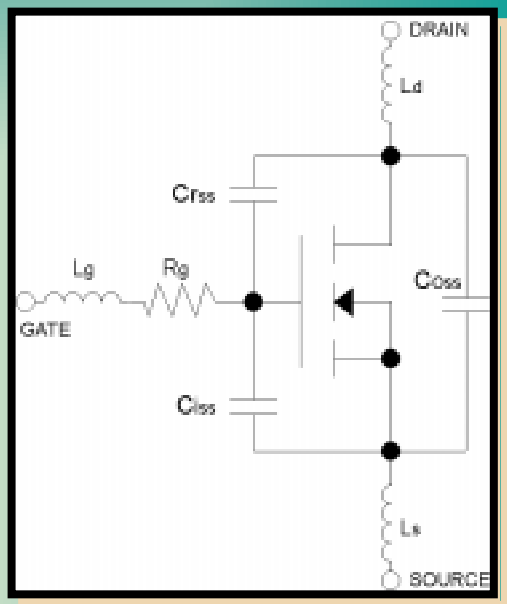

$$\frac{di}{dt} = \frac{1{,}000 \text{ Amps}}{100 \times 10^{-9} \text{ Sec}} = \frac{10{,}000 \text{ Amps}}{\upsilon \text{ Sec}}$$

$$L = 2 \text{ nH}$$

$$\mathbf{E} = \mathbf{L} \bullet \frac{di}{dt} = (2 \times 10^{-9})\frac{(10{,}000)}{10^{-6}} = 20 \text{ Volts}$$

REYNOLDS SYSTEMS INC.

AVALANCHE THRESHOLD

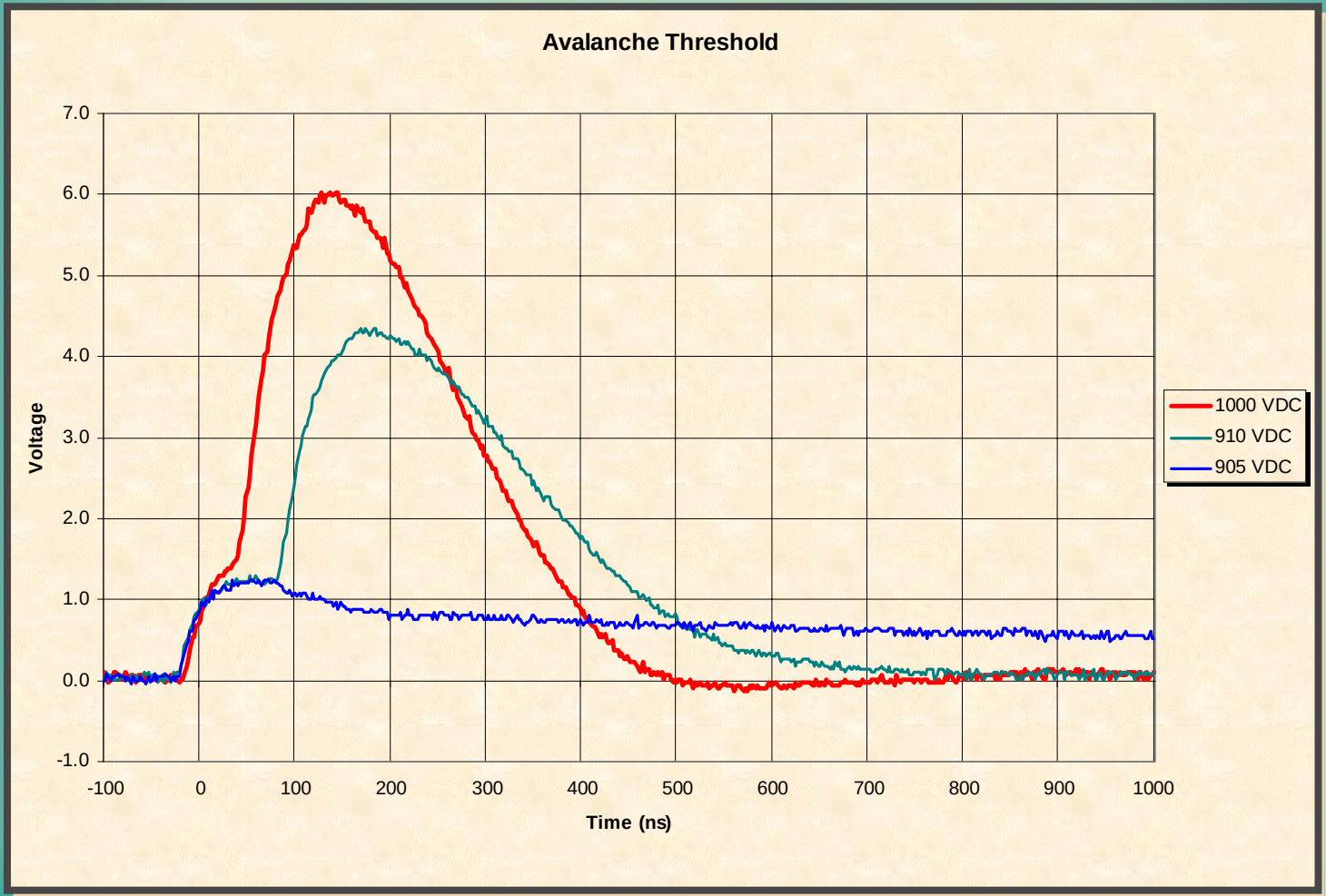

REYNOLDS SYSTEMS INC.

TEST DATA

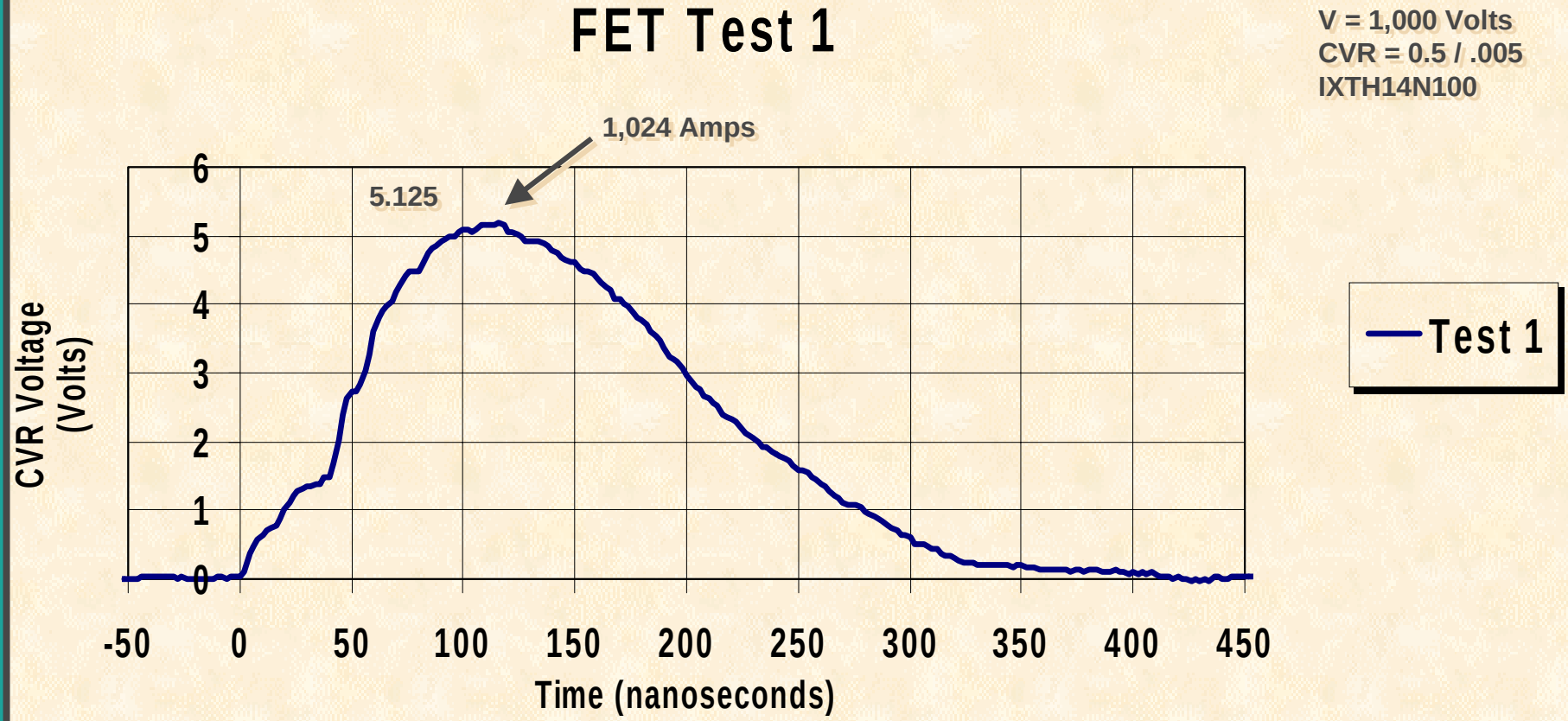

REYNOLDS SYSTEMS INC.

TEST DATA

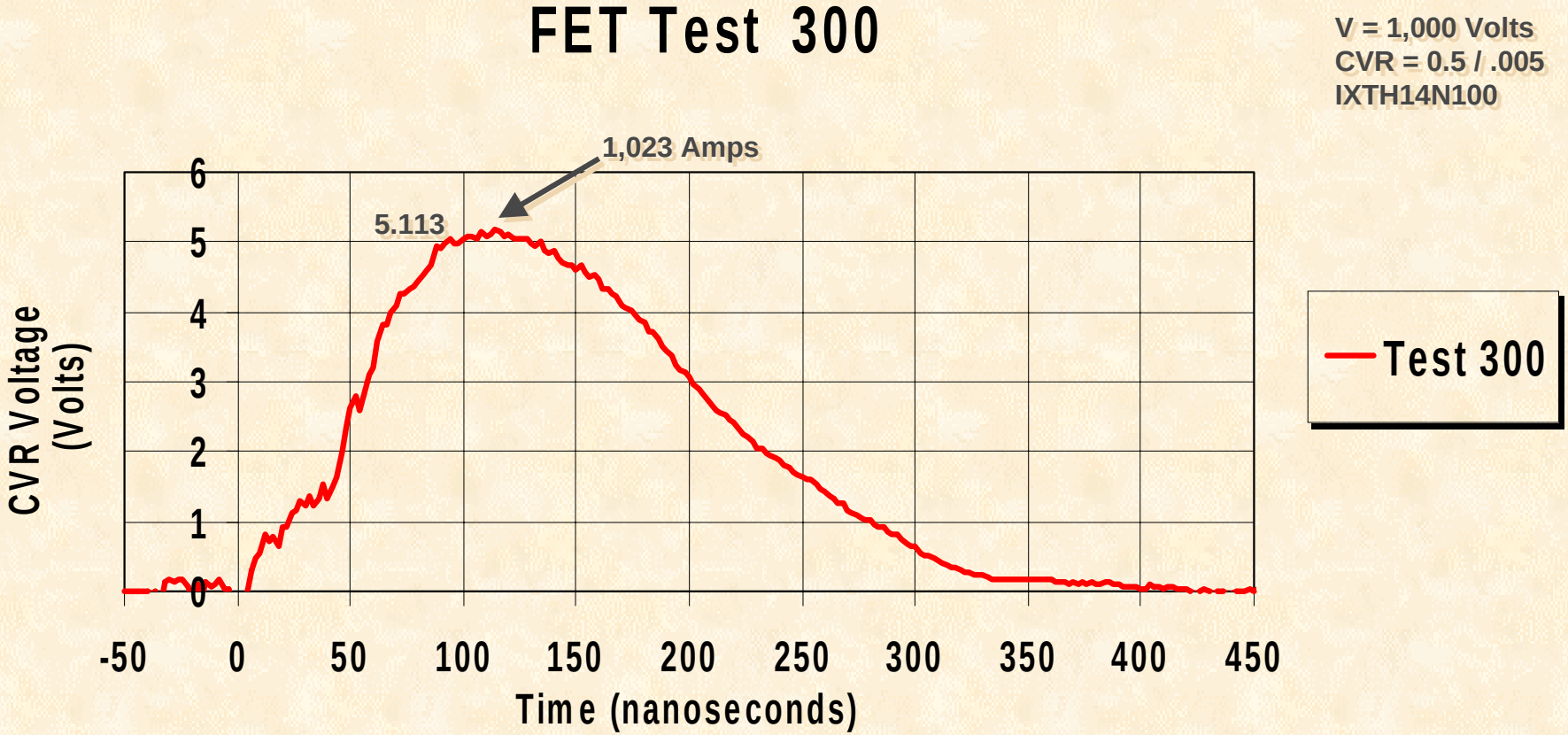

REYNOLDS SYSTEMS INC.

TEST DATA

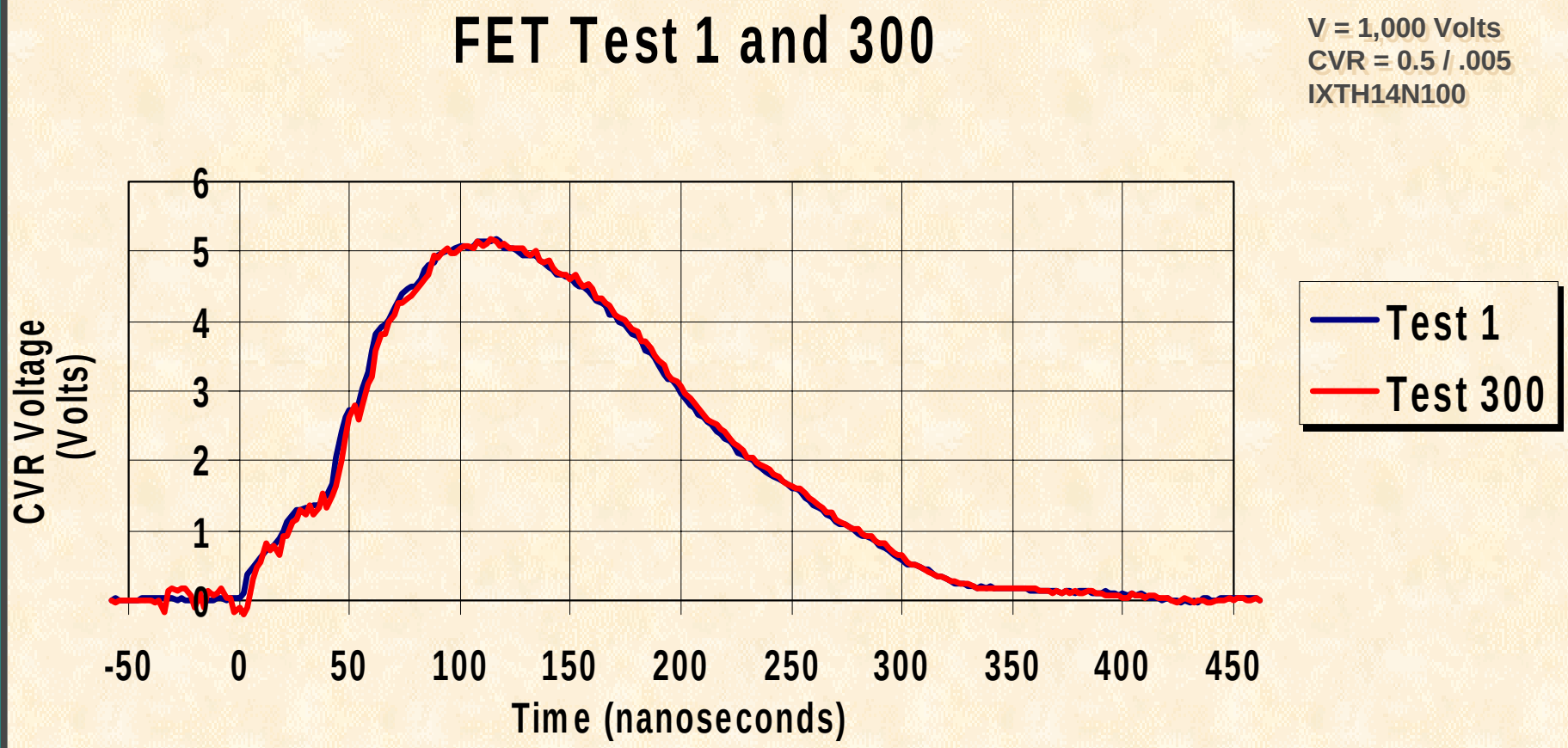

REYNOLDS SYSTEMS INC.

HIGH TEMP (160°F) FIRING

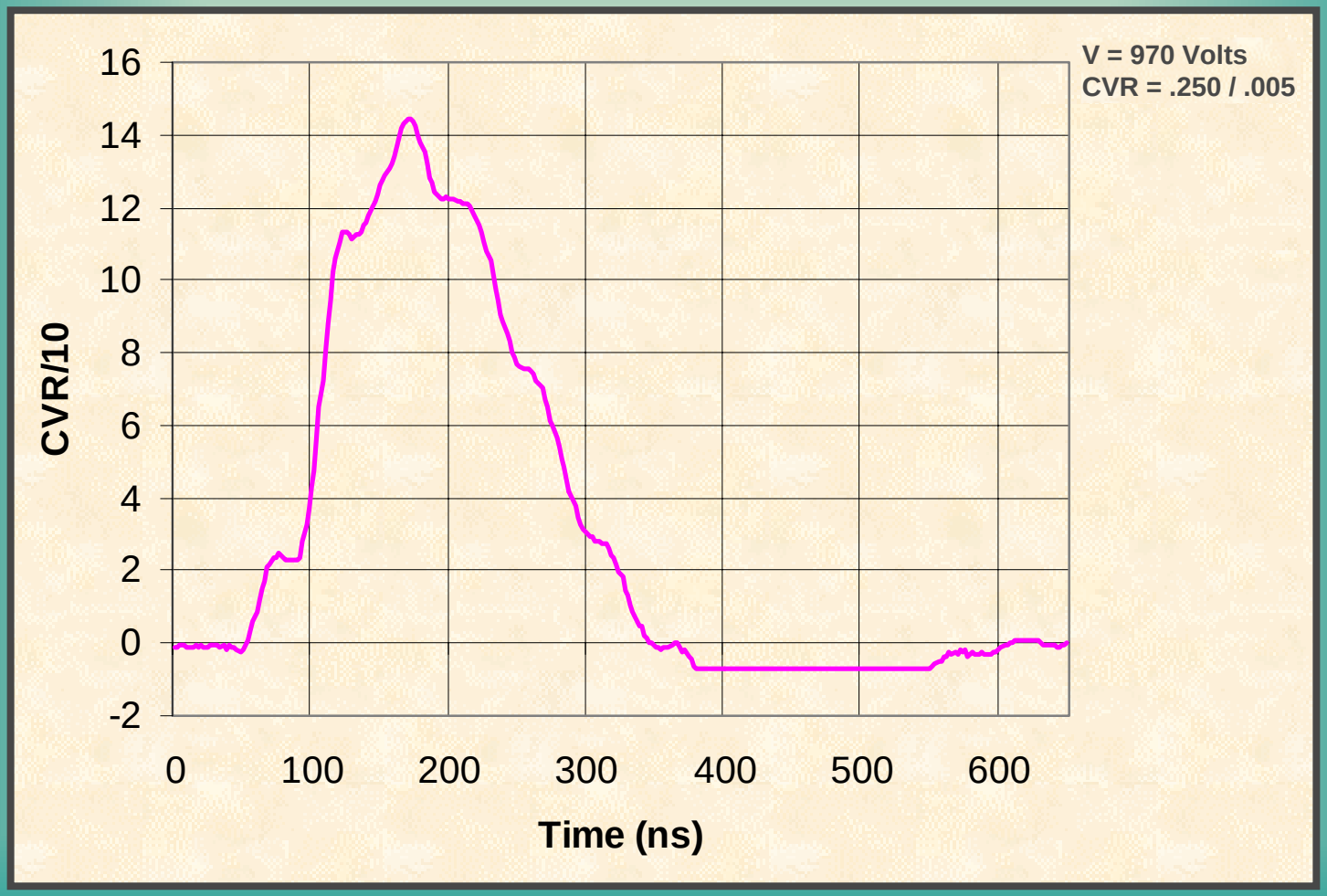

REYNOLDS SYSTEMS INC.

HIGH TEMP VS. LOW TEMP

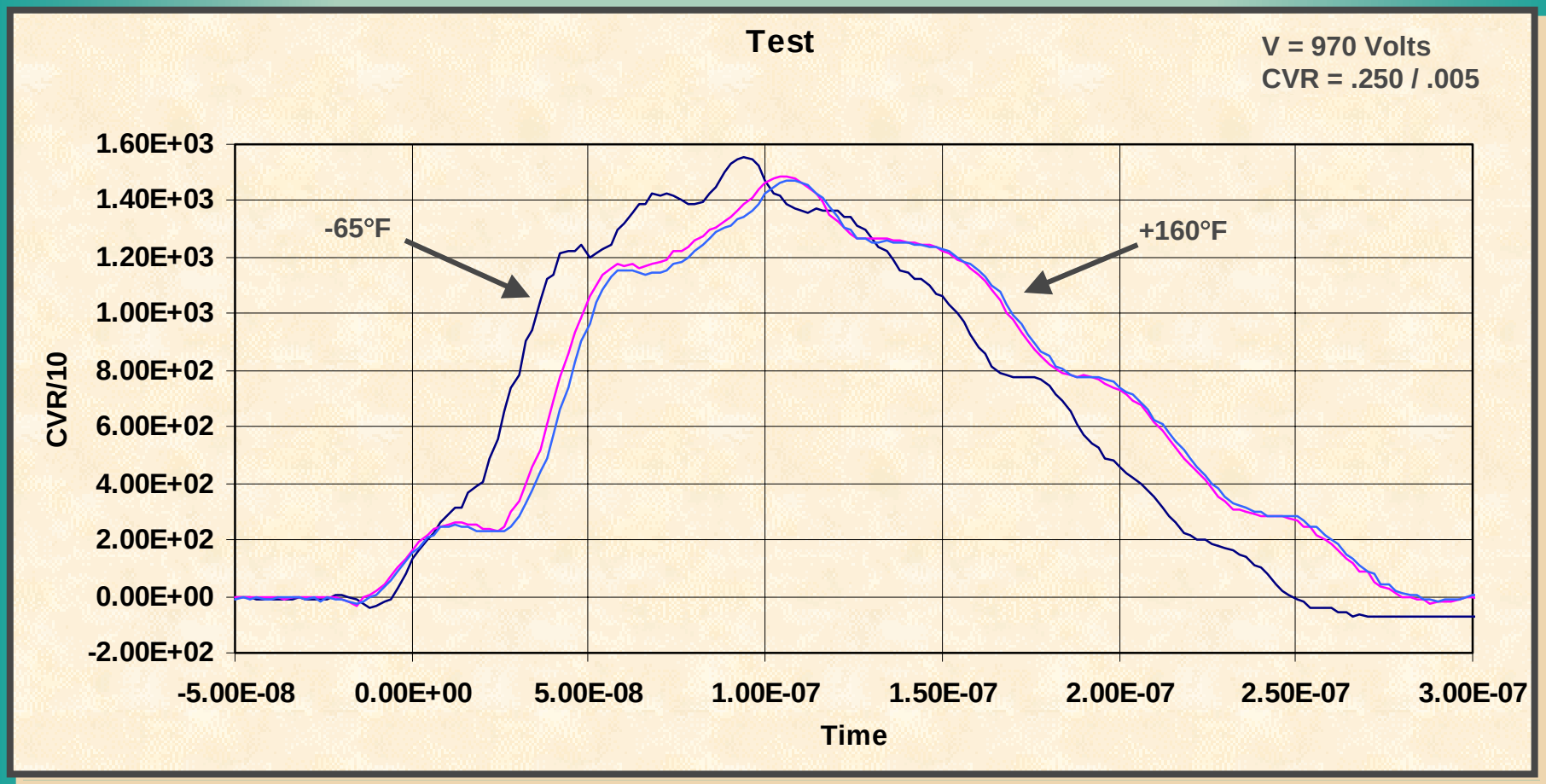

REYNOLDS SYSTEMS INC.

HIGH TEMP VS. BRIDGE

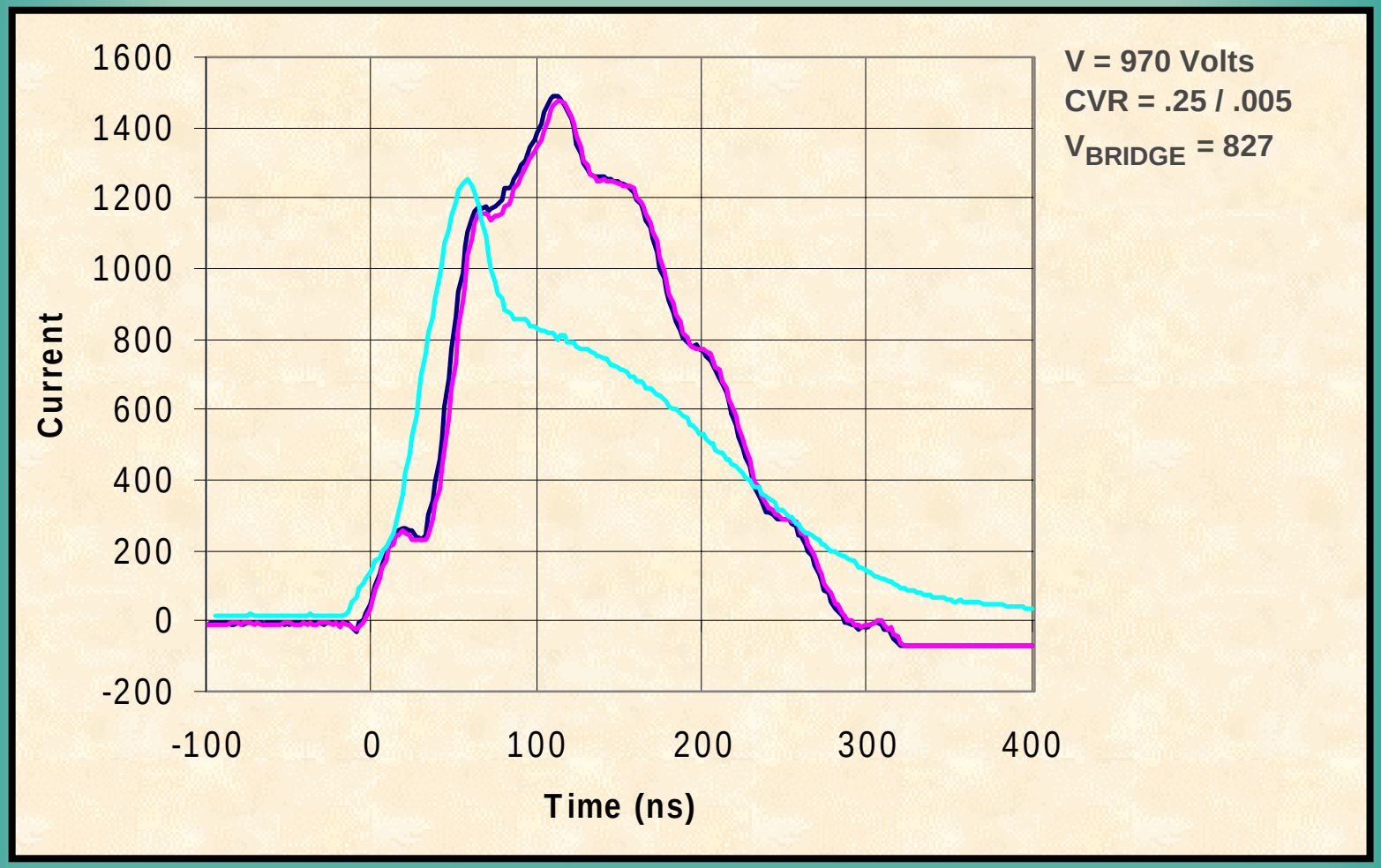

REYNOLDS SYSTEMS INC.

CAPACITOR VOLTAGE

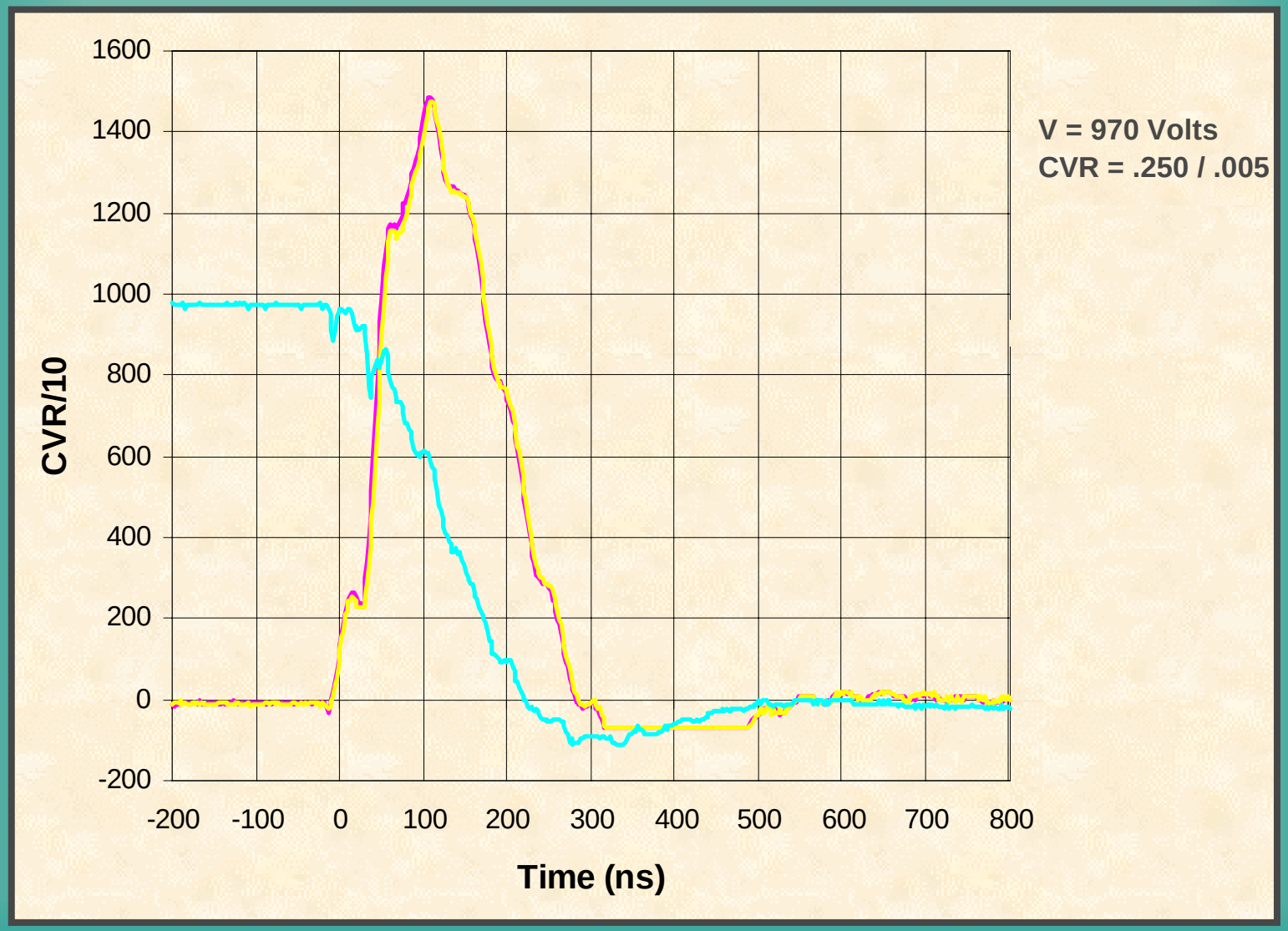

REYNOLDS SYSTEMS INC.

AVALANCHE VS. LINEAR

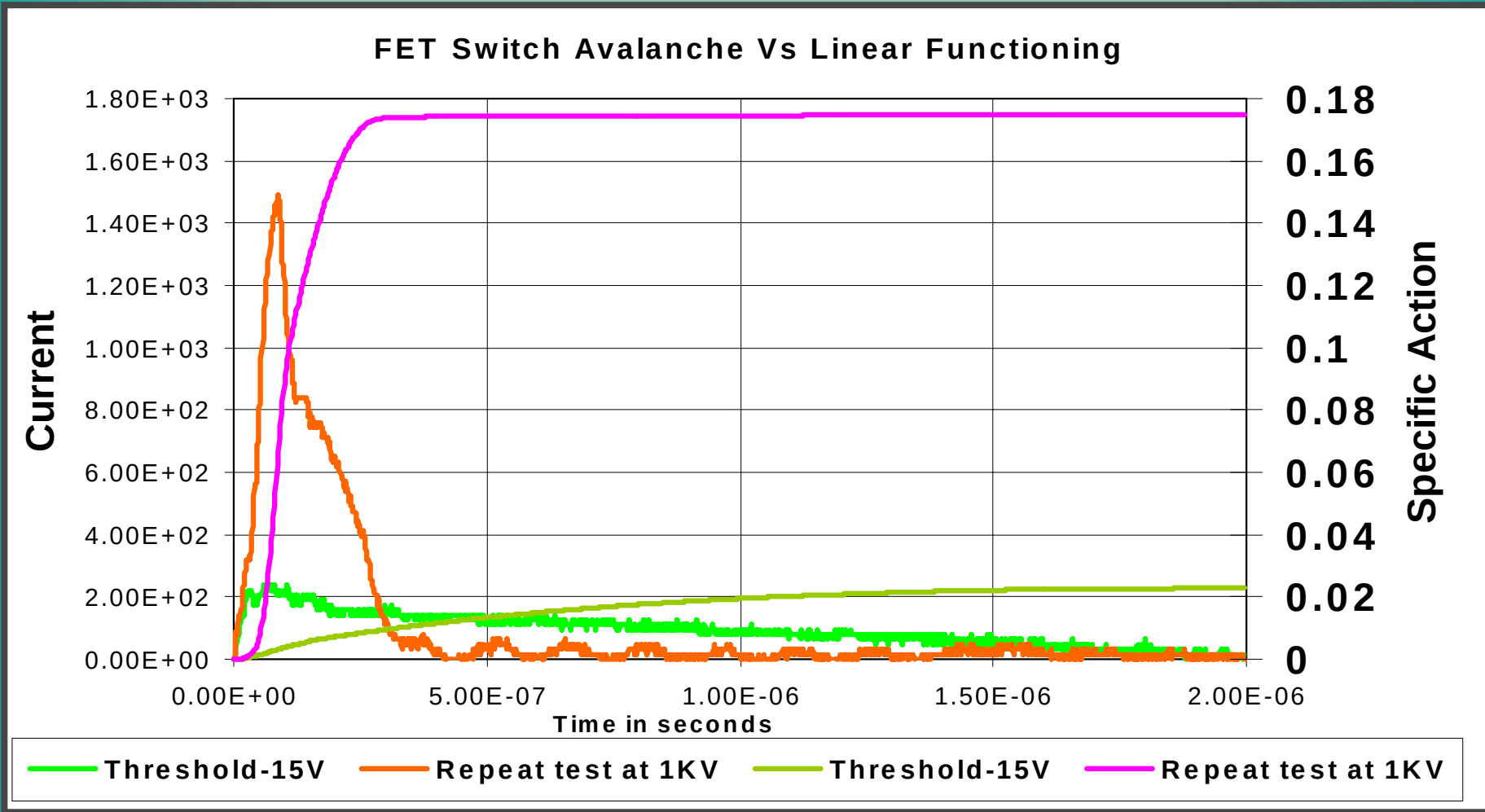

REYNOLDS SYSTEMS INC.

REMAINING TASKS

- FET Switch
  - Fully Characterize Avalanche Operation
    - Understand Any Failure Mechanisms
    - Investigate Part to Part and Manufacture to Manufacture Variations
    - Environmental Testing

REMAINING TASKS

- Explosive Material
  - Monitor Qualification Progress
  - Fabricate and Test
- Capacitor
  - Monitor Technology Advancements
  - Acquire Samples
  - Extensive Testing

SUMMARY

- Firesets and Fireset Components Are Critical to the Performance of ESADs
- Advances in Technology Have Made Improvements Possible
- Test Data Has Shown That MOSFETs / NMCTs May Replace Spark Gaps in the Near Future