LASER DAZZLER

9/30/97

LE Systems has developed a new tool, for today's Law Enforcement, Corrections & Military Communities. Under the sponsorship of DARPA's Joint Program Steering Group, LE Systems has completed and delivered, ten prototype non-lethal laser flashlights. The Laser Dazzler is designed to allow the officer to "reach out" to their suspect.

Working with both Phillips Laboratory, [PL/LIDA], and the National Institutes of Justice, [NIJ], the design incorporates features which allows the officer to disorient, confuse, and distract the suspect, without causing bodily harm.

Eyesafe at the aperture, the Laser Dazzler will have a temporary effect on the officers adversary. It presents to the target, an "optical wall", which will cause most suspects to turn away from the light. Another feature of the flashlight is the "strobe" effect, built into the programmable power supply, which modulates the laser, to add to the distraction.

During the course of the devices development, LE Systems has interacted with numerous potential endusers. Comments have ranged from, "how soon can I have one?", to, "if only we had this yesterday"

Today's Police Officer, Corrections Officer or Soldier in peace-keeping efforts, has many choices when dealing with a potentially violent situation. Unfortunately, with these choices come limitations. Traditional tools such as batons, pepper sprays and defensive tactics require the Officer to place him or herself within close personal distances with their adversary, which greatly increases the chance of injury. Less-Lethal munitions (Bean Bag, Baton, & Net rounds) allow only a slightly greater distance, but can (and have) caused unwarranted lethal injuries. These devices often escalate encounters because of the close proximity the operators must get have with their targets. Firearms bring a tragic end to some situations where no other means are available to safely control an individual from distance.

Distance is the key to controlling potentially violent encounters. Creating a safety zone for the officers involved and a time cushion to allow a variety of decisions on the use of force continuum does this. Having a Laser Dazzler, in the inventory, will give the officer the ability to reach out beyond 25 meters, to ranges up to hundreds of meters. The Laser Dazzler will give the officer or soldier an "optical shield", even in daylight, and will give the officer a choice, an upper hand, and most of all time, before resorting to lethal force.
LE Systems Inc. expects to be able to begin, "limited", deliveries of the Laser Dazzler by the end of 1998, to selected endusers. The initial device incorporates, "off-the-shelf" technology, and the second generation will be "smaller, lighter, and less expensive".

Keywords: Laser, Non-Lethal, Dazzle, 532nm, and Eyesafe

Author: Jay Kehoe, Application Manager
LE Systems Inc. 60 Sequin Drive Glastonbury, CT. 06033
Phone: 1-860-633-0459 Fax: 1-860-633-3284 e-mail: LESystems@AOL.com

For further information contact: Richard Nelson, Program Manager - Laser Systems

Laser Dazzler for Non-Lethal Force Applications

LE Systems has developed a new tool, for today's Law Enforcement, Corrections & Military Communities. Under the sponsorship of DARPA's Joint Program Steering Group, LE Systems has completed and delivered ten prototype non-lethal laser flashlights. The Laser Dazzler is designed to allow the officer to "reach out" to their suspect.

Working with Phillips Laboratory, [PL/LIDAI, and the National Institutes of Justice, NIJ, the design incorporates *features,* which allows *the* officer to disorient, confuse, and distract the suspect, without causing bodily harm.

The Laser Dazzler is essentially a handheld, green, 532mn diode pumped laser. The *532nm* frequency was chosen for it's unique ability to react with the human eye in both daylight and reduced light conditions, causing disorientation and confusion. The second advantage is the range of green light is, "orders of magnitude" greater than white light

Eyesafe at the aperture, the Laser Dazzler will have a temporary effect on the officer' or soldier's 5 adversary. It presents to the target, an "optical wall", which will cause most suspects to turn away from the light. *Although a minimal* use of force, the Laser Dazzler gives the user a "time cushion" that is found in no other device. This "time cushion" allows a safe standoff distance, greater officer safety, surrender, de-escalation, or other force options to be exercised. Another feature of the flashlight is the "strobe" effect, built into the programmable power supply, which modulates the laser, to add to the distraction I disorientation effects.

In encounters between law enforcement personnel and persons demonstrating passive resistance or emotionally disturbed individuals, the distance between the two can be directly related to force needed to control the individual and the potential for violence. With conventional tools currently available to law enforcement, the officer must get within close personal distances to employ any non-lethal measures. Closing this distance increases the risk to the officer and to the escalation of the event. Less-lethal measures can increase the standoff distance to approximately *25* meters, but the potential for injury or even death is real.

Non-Lethal devices, such as the Laser Dazzler, are not meant to replace anything tools currently used in law enforcement. They are to add to the versatility of law enforcement, dealing in today's litigious world. The goal of non-lethal devices is greatly different from less-lethal devices. Non-lethal devices offer temporary control, their effects are uncomfortable, they cause no injury, and there are no lawyers. Less-Lethal devices offer a higher level of control, but the potential for injury or death must be carefully weighed before use.

The Laser Dazzler, in its current configuration, can be effectively used beyond distances of fifty meters. This allows for a large "time cushion", enhanced officer safety, and a tremendous effect referred to as a "Psychological Takedown". This is the ability to effectively interact with a subject, by overwhelming the senses without injuring, and without getting within close personal distances.

The Physical design of the Laser Dazzler is critical. This device is designed to look like and be operated like a typical law enforcement flashlight. This is to maintain a consistency in training with the officer. All of the physical skills needed to utilize the Laser Dazzler, as a stand-alone device or in conjunction with a duty firearm, are the same as those currently used with a flashlight. (Figure 1)

The mechanical design of the Laser Dazzler is very straightforward. The assembly consists of four subassemblies. The "Patent Pending" LE System resonator, a four cell rechargeable battery pack, computer controlled power supply, and the Beam Expander assembly. Each subassembly is modular, allowing for independent assembly, and computerized testing prior to final assembly.

LE Systems inc. expects to be able to begin, "limited", deliveries of the Laser Dazzler by the end of 1998, to selected end users. The initial device incorporates, "off-the-shelf technology, and ~e second generation will be "smaller, lighter, and less expensive

Keywords: Laser, Non-Lethal, Dazzle, $532nm_3$ and Eyesafe

Author: Jay Kehoe, Applications Director
LE Systems, inc.
60 Sequin Drive
Glastonbury, CT 06033
Phone: (860)633-0459 Fax(860)633-3284
E-Mail: LBSYSTEMS®AGL.COM

REVISIONS					
LTR	DESCRIPTION	ECN	NAME	DATE	CHK

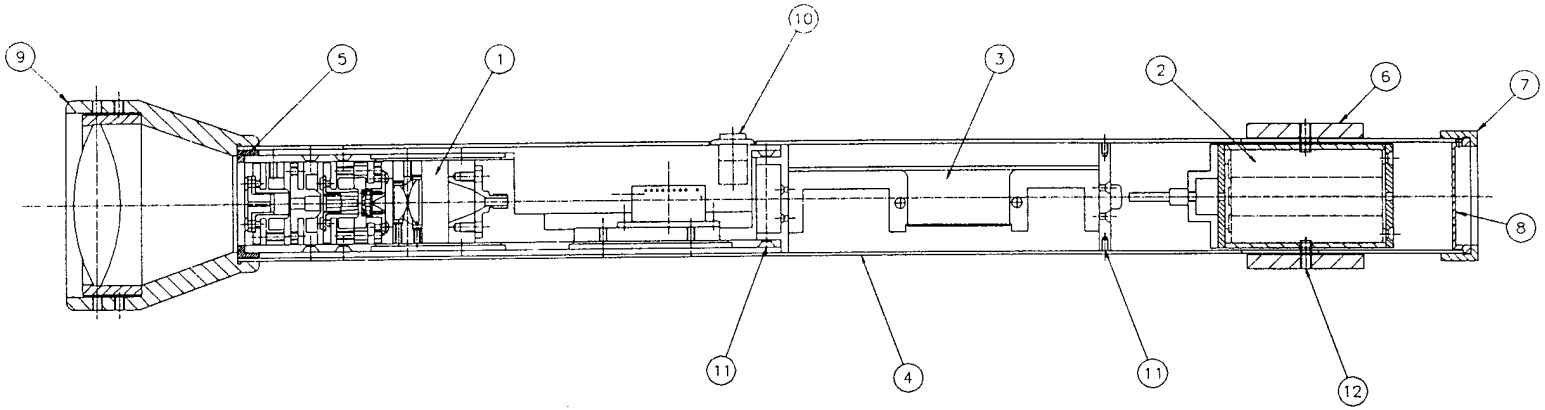

ITEM	QTY.	DESCRIPTION	PART NUMBER
12	2	SHSS, #10-32 X .50 LG	
11	11	FHCS, #6-32 X .25 LG	
10	1	PUSHBUTTON (NEWARK)	
9	1	ASSY, BEAM EXPANDER	33007-78
8	1	INSERT, PANEL, CONTROL	33007-71
7	1	CAP, END	33007-53
6	1	RING, SLIDE	33007-58
5	1	SPACER, RESONATOR	33007-49
4	1	HOUSING, OUTER	33007-48
3	1	ASSY, POWER SUPPLY	33007-03
2	1	ASSY, BATTERY PACK	33007-02
1	1	ASSY, RESONATOR	33007-01

PARTS LIST

THIRD ANGLE PROJECTION

THIS DOCUMENT, INCLUDING THE INFORMATION CONTAINED HEREIN, IS THE PROPERTY OF L.E.SYSTEMS AND IS DELIVERED ON THE EXPRESS CONDITION THAT IT NOT BE DISCLOSED, REPRODUCED IN WHOLE OR IN PART, OR USED FOR MANUFACTURE WITHOUT THE EXPRESS WRITTEN CONSENT OF L.E. SYSTEMS

UNLESS OTHERWISE SPECIFIED
TOLERANCES
.XX = ±.010 FRACTIONS = ±1/64
.XXX = ±.005 ANGLES = 0°-30'
BREAK SHARP EDGES .005-.020
FILLET RADII .005-.020
DIMENSIONS ARE IN INCHES

DO NOT SCALE DWG.

MATERIAL XXX

FINISH XXX

	NAME	DATE
DRN		
DESG	L. BILLINGS	5/31/97
CHK		
APPR		

PROJ. NO. DAAE30-98-C-0070

MODEL XXX

L E Systems Inc.
CLINTONBURY, CT 06033

TITLE ASSY, FLASHLIGHT

DWG NO. D-33007-00 REV 4

SCALE FULL SHEET 1 OF 1