POCKET LASER RANGEFINDER UPDATE

2002 International Infantry & Small Arms Symposium

May 16, 2002

William Dunnill

Jos van Seeters

Leica Technologies Inc
703-777-3900
bill.dunnill@lti.leica.com

Leica Geosystems

Outline

- Pocket Laser Rangefinder (PLRF)
- Viper/Vector IV
- Vector 21
- Vector N (Night)
- Laser Rangefinder/Digital Magnetic Compass Module

Leica Geosystems

Leica LRF Products Supporting Small Arms Users

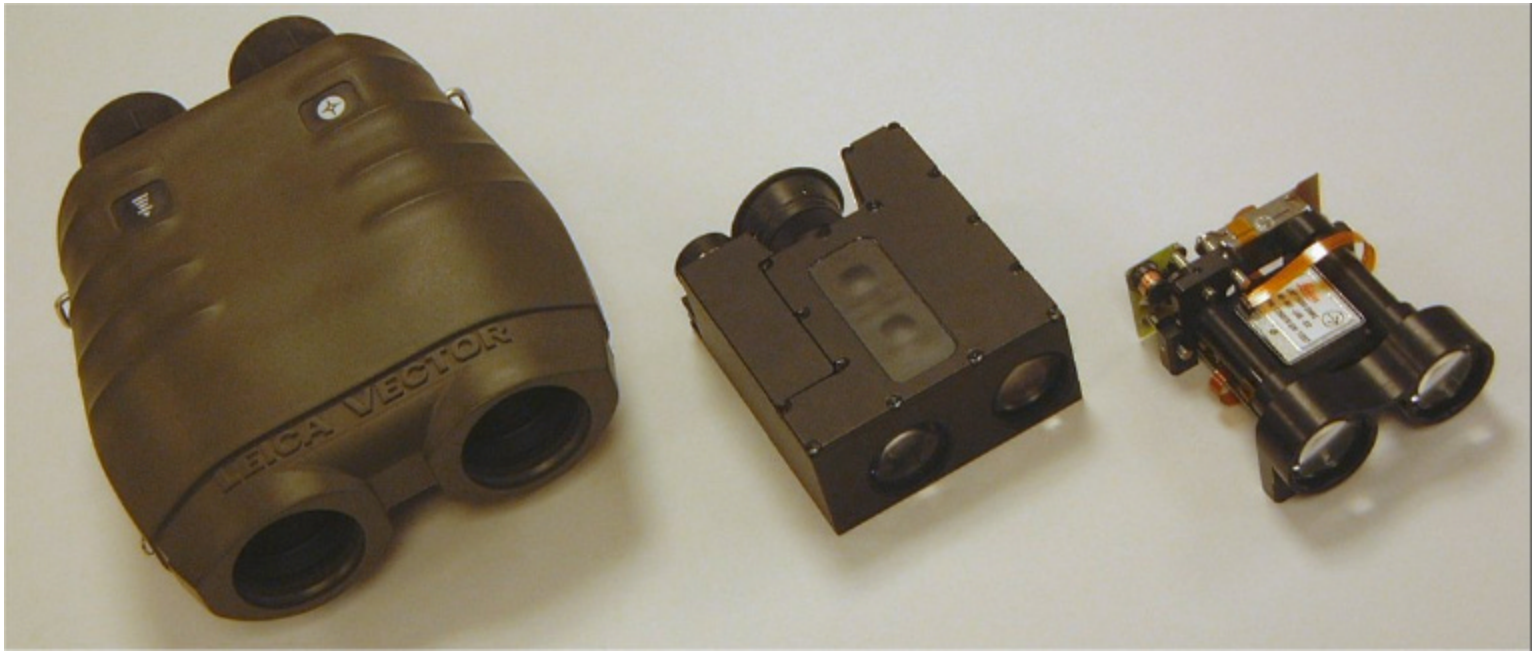

VIPER/VECTOR POCKET LRF LRF/DMC MODULE

Leica Geosystems

LEICA PLRF - Pocket Laser Rangefinder

- Pocket LRF Range > 1km
- Class 1 eye safe
- Size (4.5 x 3.7 x 1.7 inch)
- Handheld (17 oz)
- 6 x 28 Monocular
- Button operated
- Adaptation to NV
- IAW MIL-STD 810
- Submersible 66 ft
- > 5,000 shots, COTS battery

Leica Geosystems

LEICA PLRF - General Characteristics

Rangefinder

- Range performance: 50 - 1000 m
  (albedo 0.1, target size 1 x 1 m, vis. 7 km)
- Measurement range: 5 - 2500 m
  (theoretical on display)
- Accuracy: ± 1 m
- Diode laser: 905 nm
  1550 nm
- Eye-safety: Class 1
  according to ANSI Z 136.1 (2000)

Leica Geosystems

PLRF - Status

- Oct. 4, 2000: Order for two 905 nm ETU (engineering test unit) USN Contract N00164-01-D-0004, delivery order 0001
  (delivered April 2001)

- Jan. 20, 2001: Order for two 1550 nm ETU, delivery order 0002
  (delivered July 2001)

- Feb. 14, 2002: Order for 523 1550 nm units, delivery order 0003
  (delivery to start August 2002)

Leica Geosystems

LEICA VIPER/VECTOR IV Rangefinder Binoculars

- 7 x 42 Binocular Optics
- Rangefinder: 5 m to 4+ km
- Class 1 eye safe
- Gating, MOM
- Compass and Inclinometer
- Displays range, bearing, elevation, FO SV (8 meas. in total) in field of view
- Digital output via RS232, PLGR interface, SLP in process
- Auto boresight with NV equipment
- Floats and is waterproof
- >3000 measurements with COTS battery
- 3.7 lbs

Leica Geosystems

VECTOR/VIPER: Typical Applications

Snipers
Anti-tank Weapons
Range and elevation
First round hit
Optimal deployment

Scouts
Forward Observers
Mortar Fire Controllers
Engineers
Reconnaissance
Target acquisition
Rapid surveying
Digital data capture
Gap measurement

Leica Geosystems

Low Earth Orbit Position and Reporting Device (LEOPARD)

Assault Pack Capabilities

Viper Laser Range Finder
- Azimuth, Elevation & Distance
- 4.5km range
- +/- 1m accuracy

Palmtop
- GPS,Comms, Viper Interface
- Standard Mil Reporting Formats
- Common Operational Picture

Mobile Satellite Service Handset (Iridium)
- Voice and Data Capability
- 2400bps transmission rate
- Worldwide over-the-horizon coverage

PLGR II
- Provides 10 Digit Location
- Provides enemy location using the vipers

Modifications for the VECTOR 21

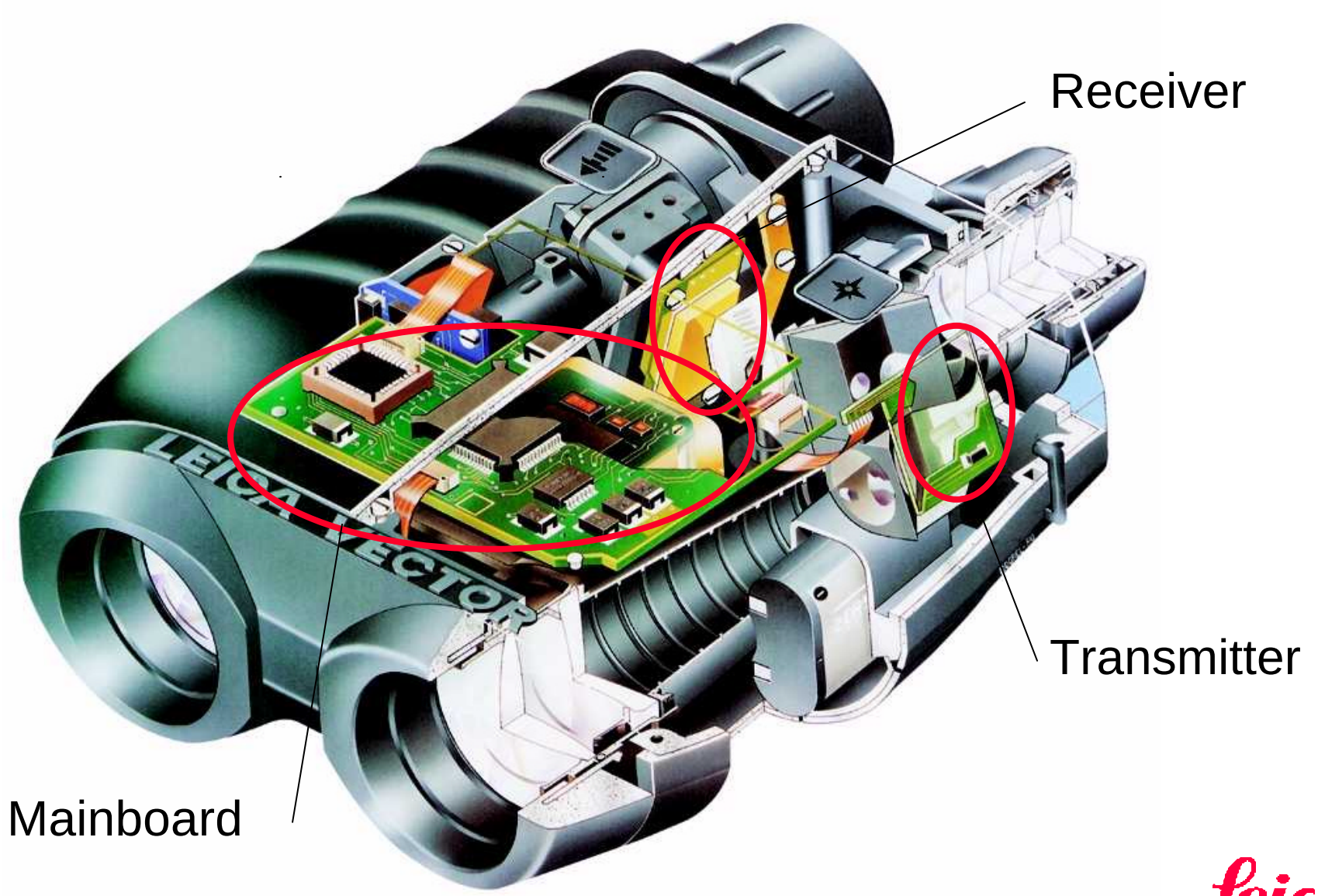

Leica Geosystems

Range Comparison, at Visibility of 10 km

Target,Albedo/Size	VIPER*	VECTOR 21*	Melios**
DPST 0.5/ 0.5m	1.5 km	2.8 km	2.8 km
NATO 0.2/ 2.3m	2.5 km	5.6 km	5.5 km
Tree 0.23/ 5m	4.0 km	7.8 km	7.6 km
House 0.35/10m	5.5 km	10.6 km	(10.0 km)

*verified with field measurements

**according to data sheet

Leica Geosystems

Vector 21 Range Measurements in Meters

Extended targets:
- 12,000, maximum
- 11,900, Mt. Scott, Ft. Sill (25 Oct 01), white house (Switzerland)
- >8,000, trees
- >7,000, slope with grass
- >4,000, slope with snow

NATO targets:
- 5,200, (2.3 x 2.3 m, 30% reflectivity; 2.3 x 4.6m, 20% reflectivity)*
- 8,100, tank
- 1,000, smoke test (could not see target) Ft. A. P. Hill (18 Oct 01)

Man-sized
- 1,964 (10% reflectivity)*

* Visibility <7 km

Leica Geosystems

VECTOR/VIPER with Integrated Night Vision

- Technological Enablers
  - breakthrough in miniaturization of Leica LRF technology
  - introduction of a new generation of Leica digital magnetic compass
  - availability of miniaturized image intensifier tubes

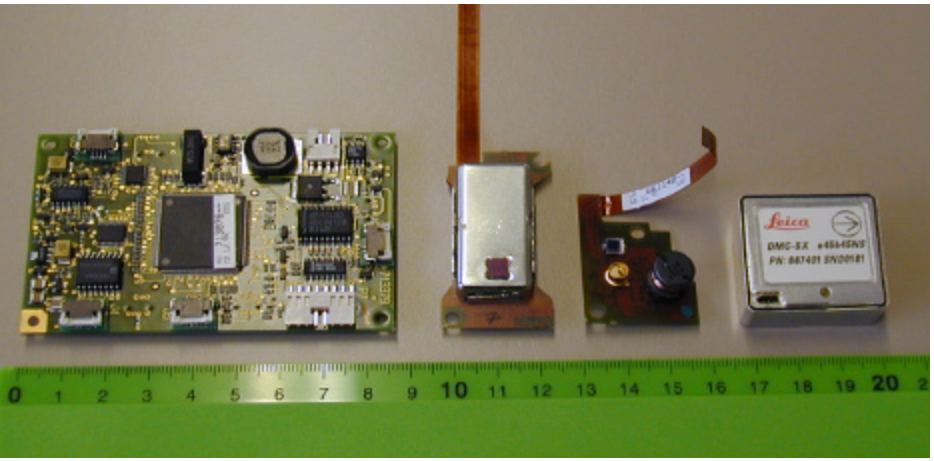

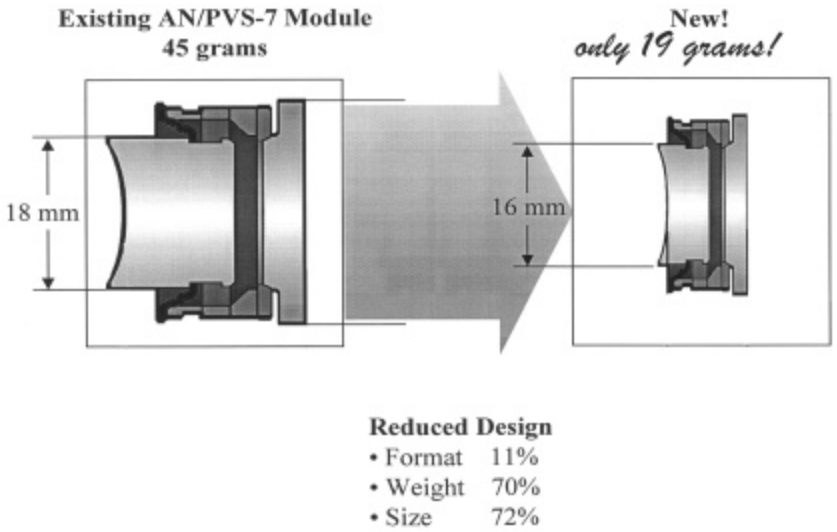

Leica Geosystems

VECTOR Night Layout

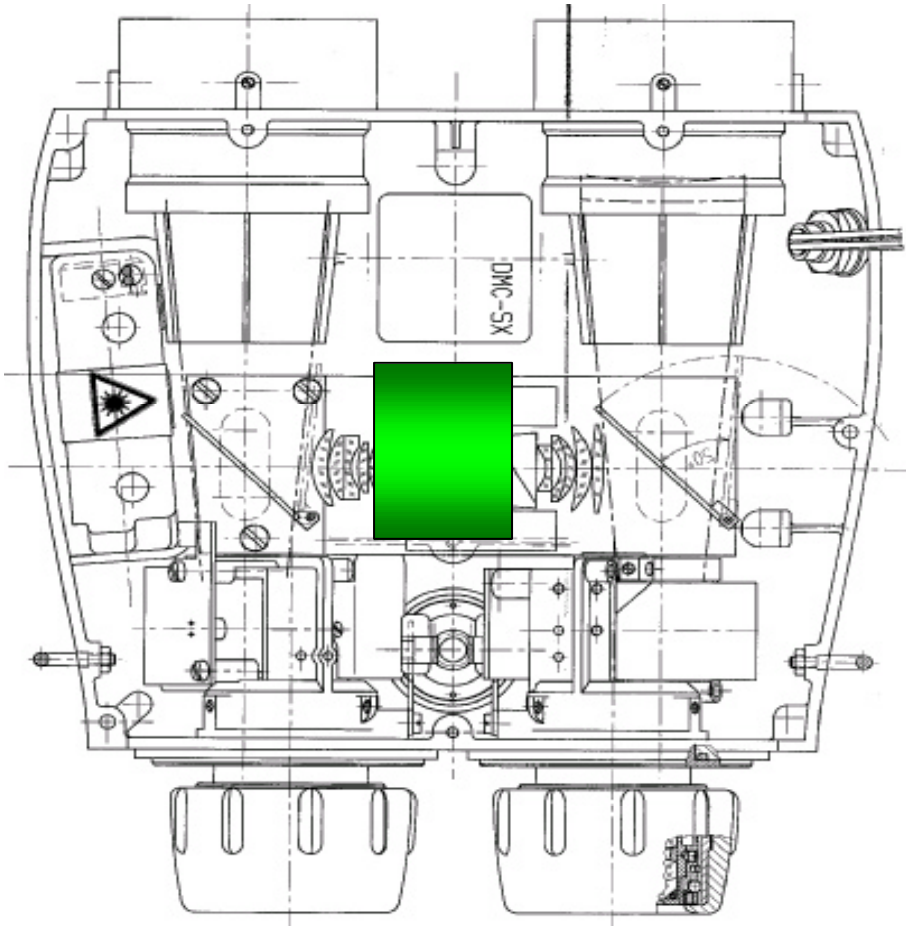

Leica
Geosystems

Laser Rangefinder/Digital Magnetic Compass Module

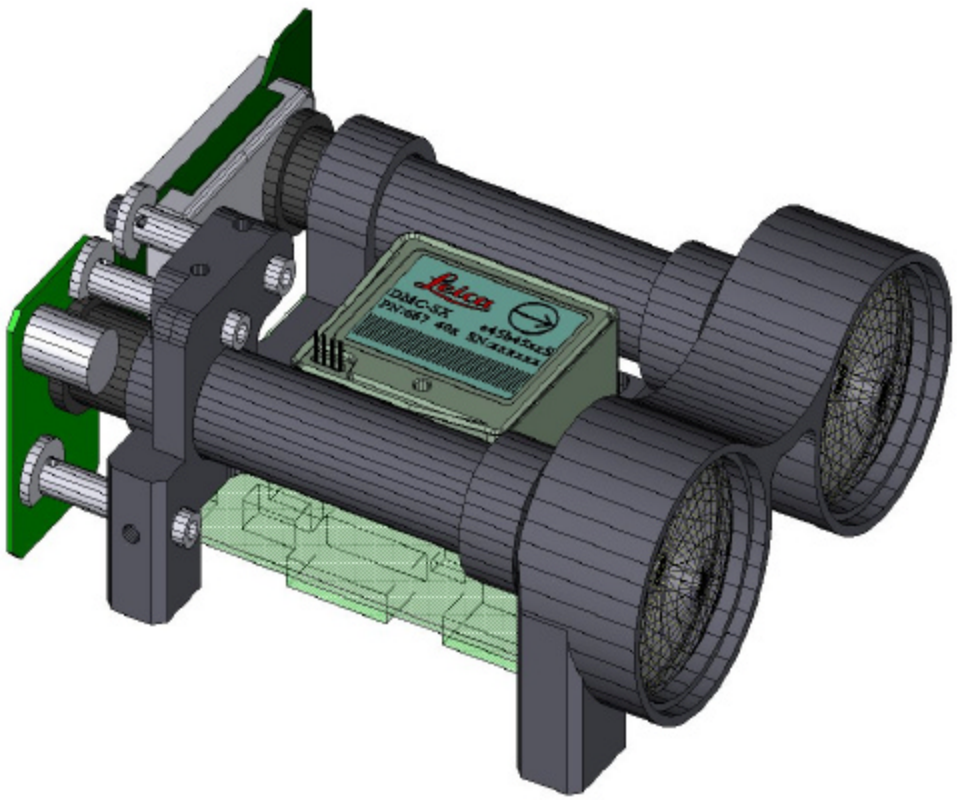

Range

- Ranges up to 2500/5000 m
- Wavelength 905 nm and 1550 nm
- Class 1 Eye Safe
  (ANSI Z136.1-2000 & EN 60825-1 1994)

Heading & 2-axis tilt

- Azimuth accuracy 0.5°, independent of elevation and bank positions
- Elevation and bank up to +/- 80°
- Built-in 3D magnetic compensation

Physical characteristics

- L x W x H: 3.9 x 3.1 x 1.7/4.3 x 3.9 x 2.0 in
- Weight (as shown): ≈ 8/12 oz.

Leica Geosystems

LRF-DMC Module, Top View

Leica
Geosystems

MK47 and VIPER Operators

Leica LRF module in LVS

VIPER/VECTOR

Leica Geosystems

Programs Using Leica LRF Modules

US Programs

MK 47 Grenade Launcher (LVS)

MK 19 Grenade Launcher FCS (SAFCS II)

OICW (LRF short list)

Proposed Land Warrior MFLS

European Programs

FIST (UK)

IdZ (Germany)

FALIN (France)

Leica Geosystems

Multi-Function Laser System

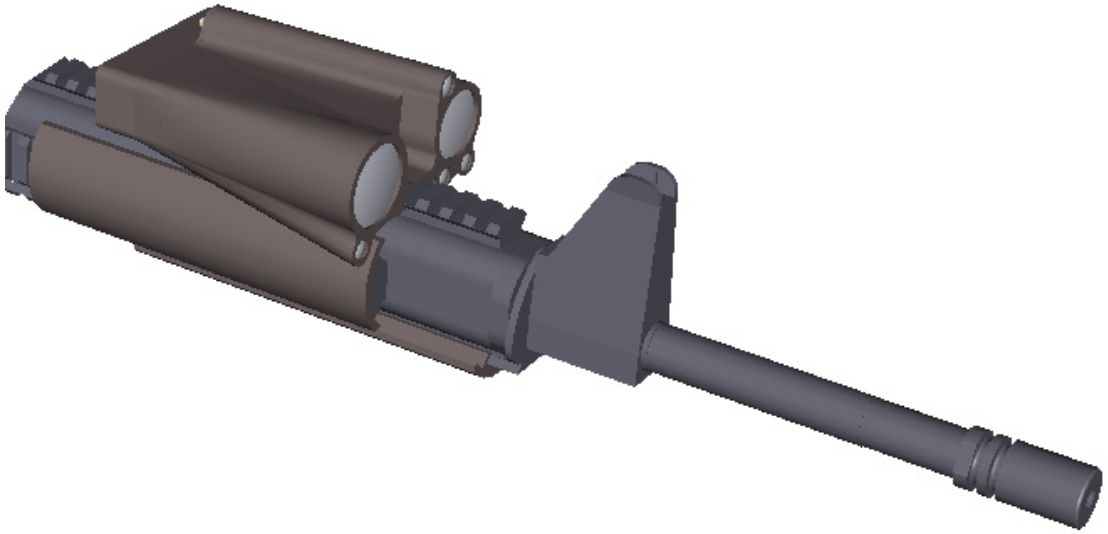

5 laser functions	Weight ~ 16 oz
CVAM	Dimensions ~ 4.7 x 3.7 x 1.9 in.
Optional CID	

Leica Geosystems

Proposed Land Warrior MFLS

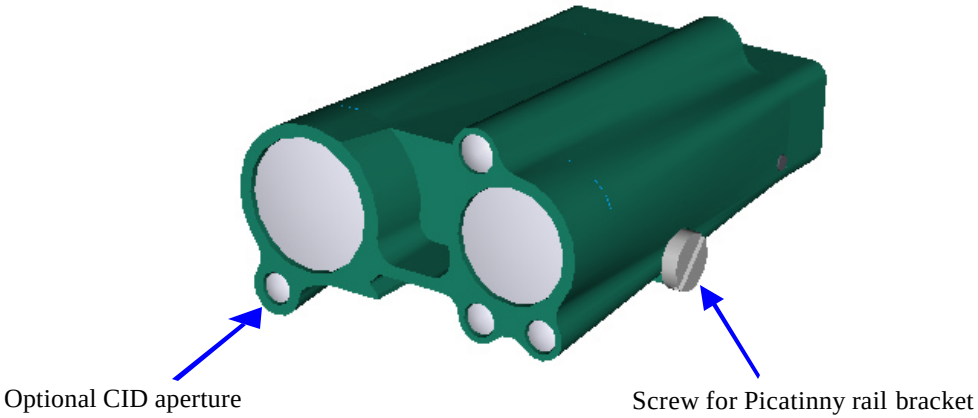

LRF: >2,500 meters

Visible Aiming Laser

NIR Aiming Laser

NIR Illumination Laser

TES (MILES)

CVAM

Leica Geosystems

Our Headquarters are in Switzerland's Rhine Valley

Heerbrugg, since 1921 (former Wild Heerbrugg)

Heerbrugg

Leica Geosystems
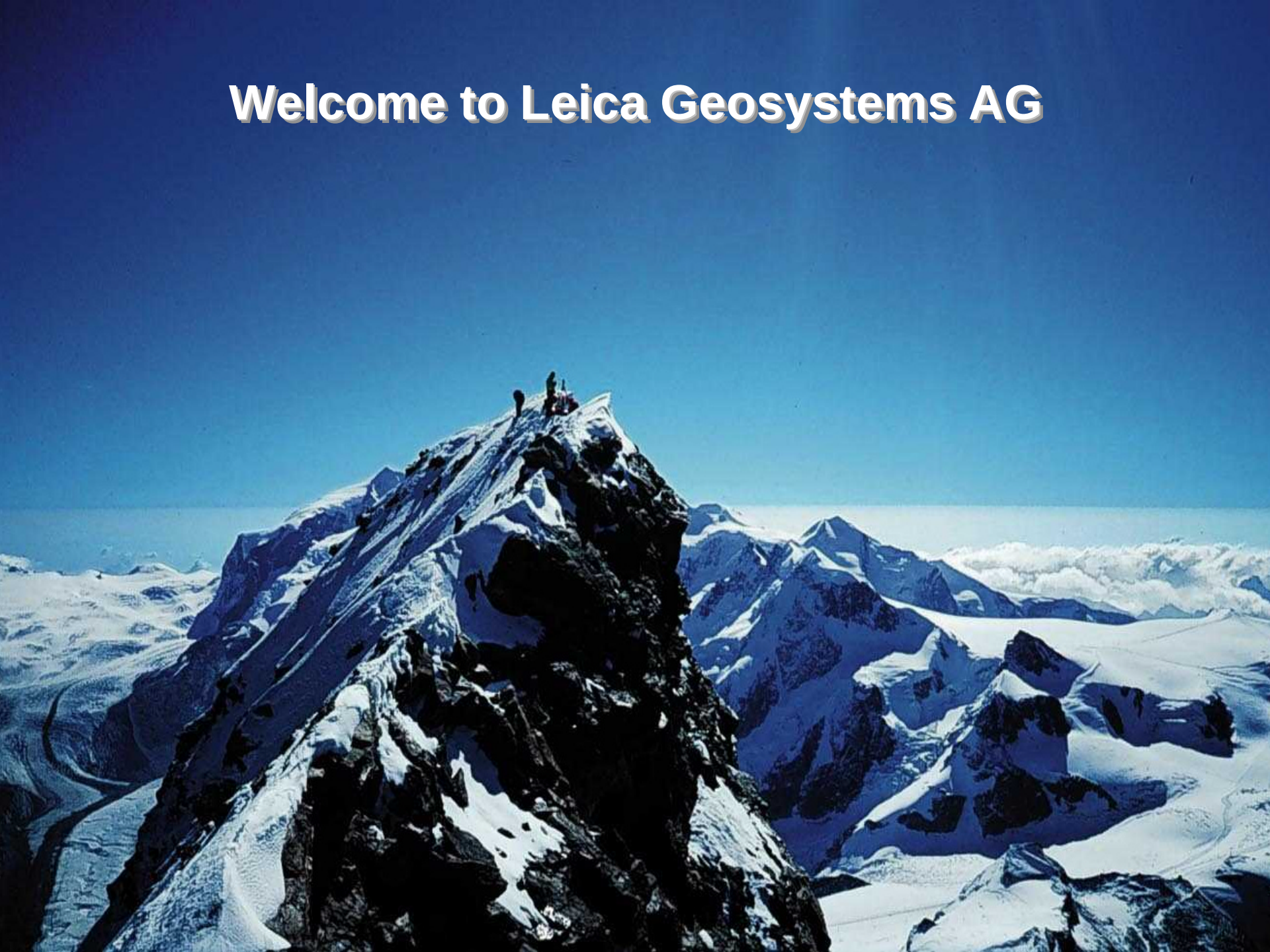
Welcome to Leica Geosystems AG