TACOM

Mobility and Firepower
for America's Army

Vehicle Electronic Architecture

Rakesh Patel

Electronic Architecture Team

Email: patelrak@tacom.army.mil
(810) 574-5188 / DSN 786-5188
Fax (810) 574-5008

U.S. Army Tank-Automotive RD&E Center (TARDEC)
Vetronics Technology Area
(AMSTA-TR-R, Mailstop 264)
Warren, MI 48397-5000

30 May 2001

UNCLASSIFIED

Outline

- TARDEC Vetronics Architecture - History
- VTT System Architecture
  - Data Distribution
  - Power Management & Distribution
- VTT Hardware Architecture
  - Crew Vetronics Station
  - Drive Vetronics Station
  - Video Distribution
- VTT Software Architecture
  - Context and Level 1 DFD
  - GOA Model - Application/System Services Layer
  - GOA Model - System Services Layer & Below
- Lessons Learned

TARDEC Vetronics Architecture - History

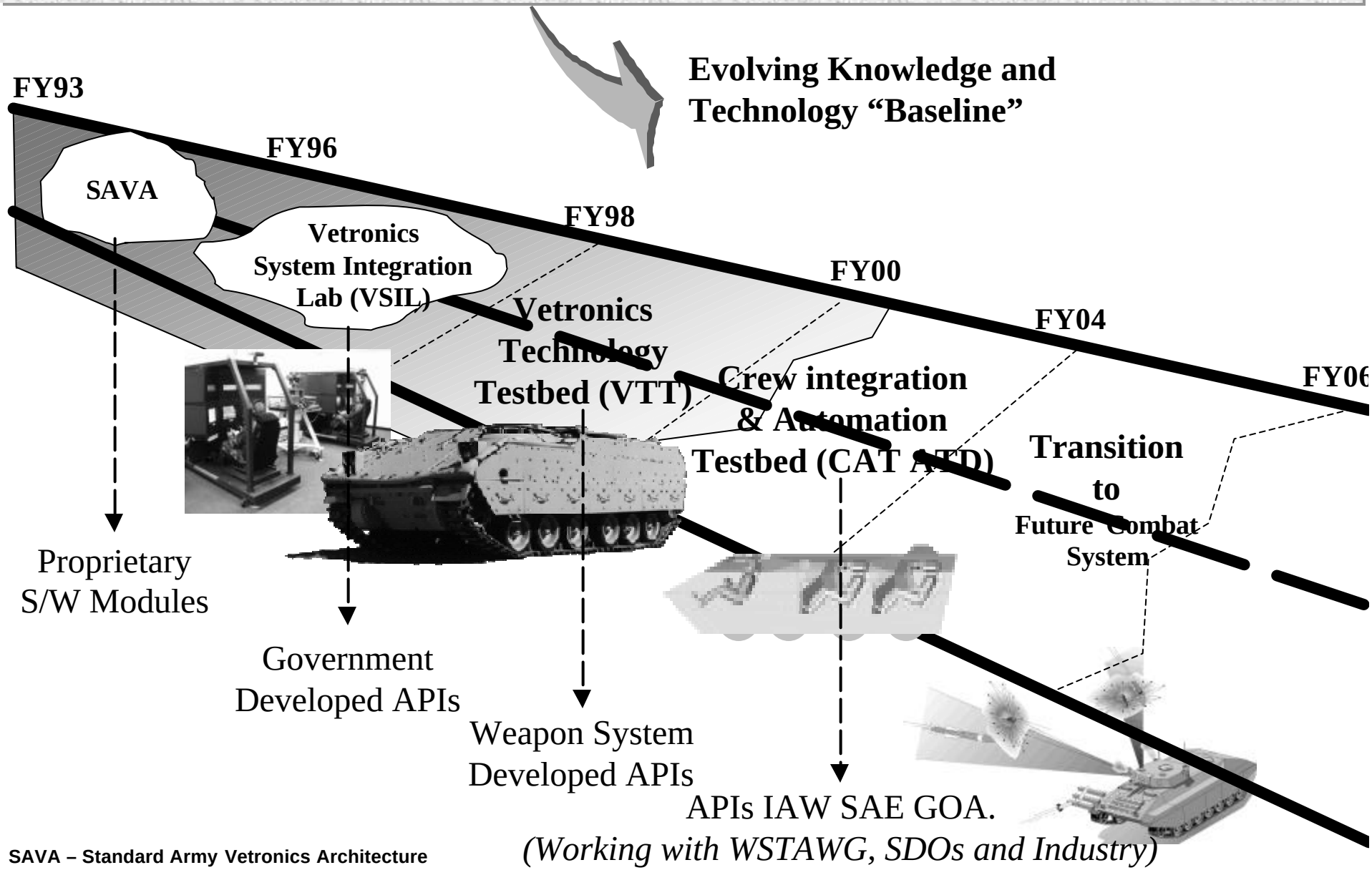

SAVA – Standard Army Vetronics Architecture
SDO – Standards Development Organization
WSTAWG – Weapon System Technical Architecture Working Group

VTT System Architecture Design Process

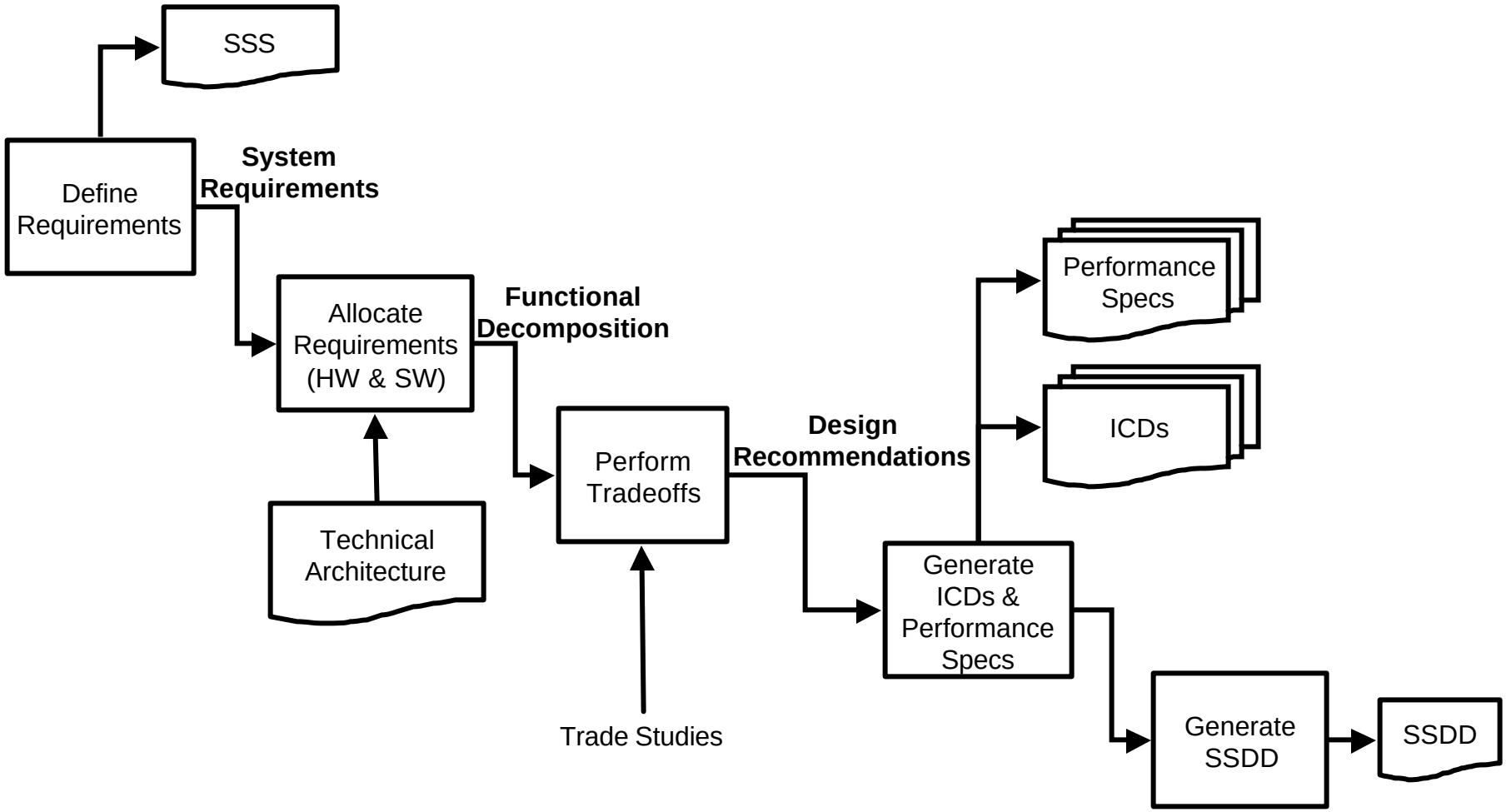

VTT System Architecture

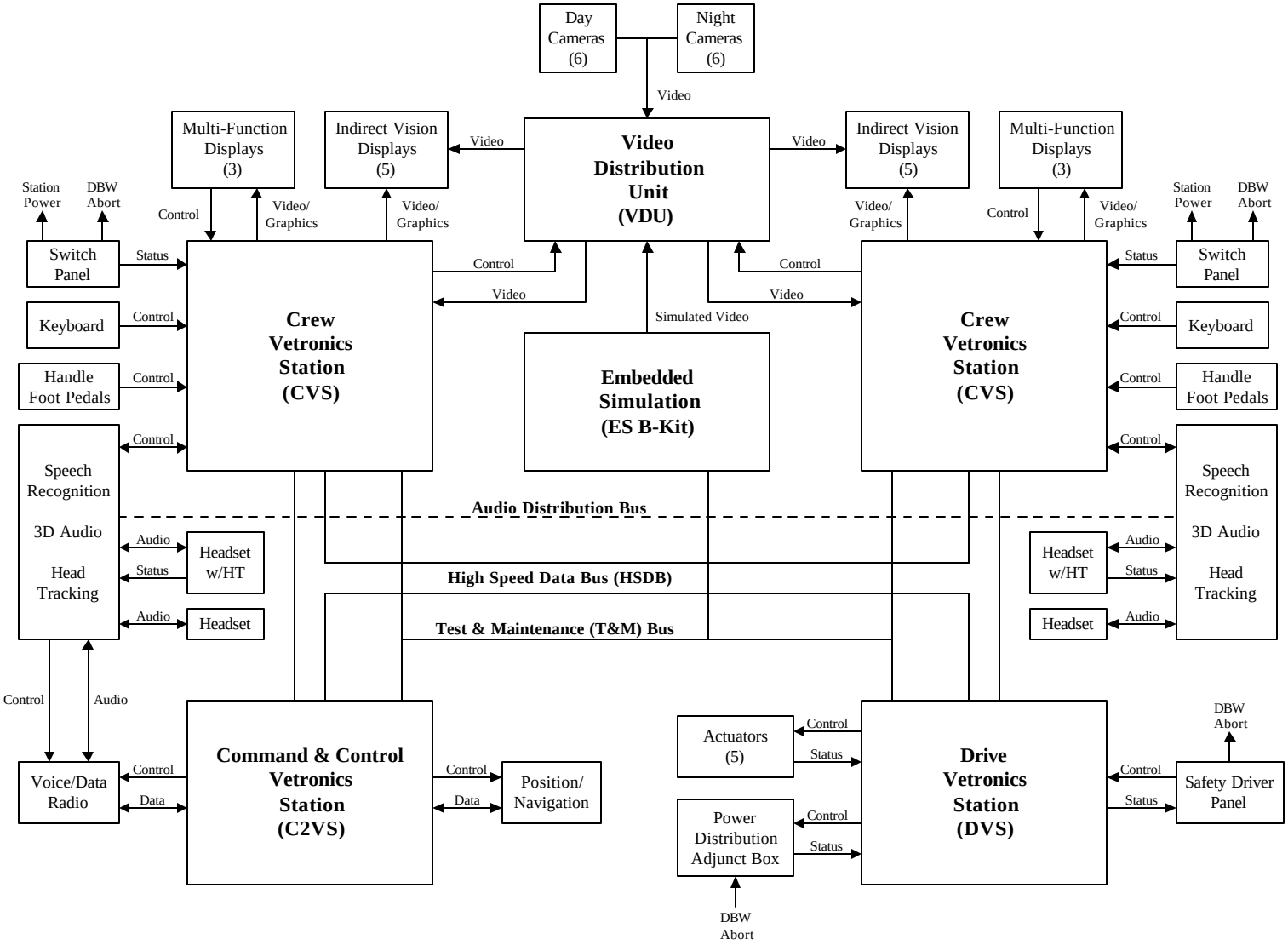

Revision 11 - 14 February 2000

VTT System Architecture
Data Distribution Block Diagram

Includes High Speed Data Bus (HSDB) and Test and Maintenance (T&M) Bus.

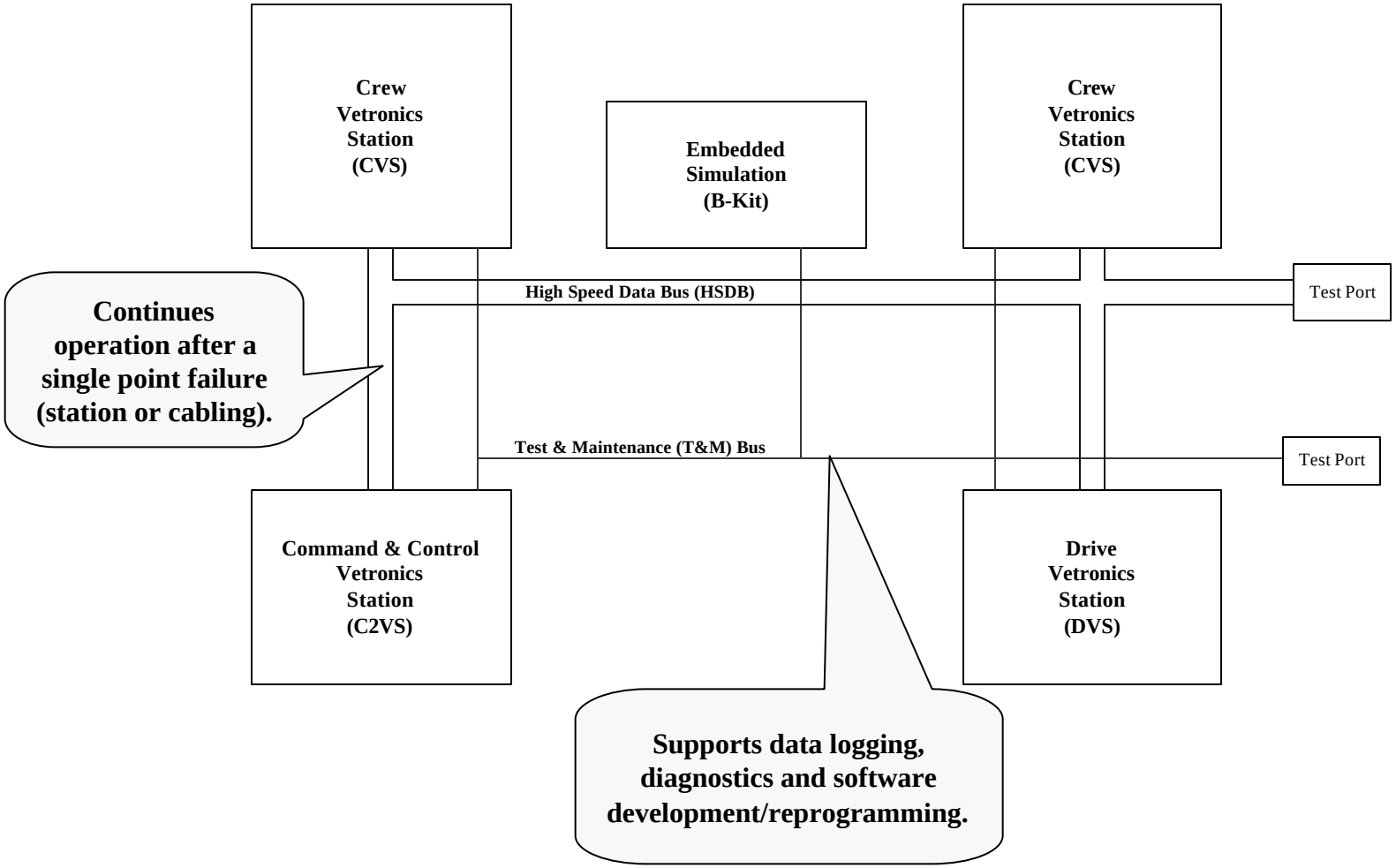

VTT System Architecture
Data Distribution Candidates

Candidate	Standard	Data Rate	Study/Drop	Justification
Linear Bus				
1553	MIL-STD-1553	1 Mbps	Drop	Too Slow
SAE 1773	SAE AS1773	20 Mbps	Drop	Too Slow
Collision Sensing				
Ethernet	IEEE 802.3	10 Mbps	Drop	Too Slow, Non-Deterministic
Fast Ethernet	IEEE 802.3u	100 Mbps	Drop	Non-Deterministic
Gigabit Ethernet	IEEE 802.3z	1 Gbps	Drop	Still Evolving
Token Bus				
IEEE Token Bus	IEEE 802.4	10 Mbps	Drop	Too Slow
LTPB	SAE AS4074	50/100 Mbps	Drop	Fiber Implementations Only
Token Ring				
IEEE Token Ring	IEEE 802.5	4/16 Mbps	Drop	Too Slow (SAVA)
FDDI	ISO 9314	100 Mbps	**Study**	Deterministic, Fault Tolerant
HSRB	SAE AS4075	100 Mbps	Drop	No available products
VNet	VSO VITA 21	24 Mbps	Drop	Too Slow, Discontinued
New Technology				
ATM	ATM Forum	155 Mbps	**Study**	Deterministic
Fibre Channel	ANSI X3	100/800 Mbps	**Study**	Deterministic, Fault Tolerant

VTT System Architecture
Data Distribution

Characteristic	FDDI	ATM	Fibre Chanel
Standardization	ISO 9314-x	ATM Forum	ANSI X3
Topology	Ring	Switched	Looped
Media Access Control	Token Passing	Switched Fabric	Arbitrated Loop
Redundancy Features	Dual Counter-	Redundant switches	Dual Counter -
	Rotating Rings		rotating Loops
	Bypass Switches		Bypass Switches
Data Rate	100 Mbps	155 Mbps	100/800 Mbps
Signal Rate	125 Mbps	155 Mbps	125/1000 Mbps
Data Encoding	4B/5B NRZI	NRZ	8B/10B
Message Overhead	224 bits Max	5 Bytes	288 bits Max
Data Packet Size	1 to 4500 Bytes	48 Bytes	0 to 2112 Bytes
Error Checking	32-bit CRC	32-bit CRC	32-bit CRC
# of Nodes	500 Max	Switch Dependent	Loop, 127 ports
Addressing Modes	Individual	Individual	Individual
	Multicast	Multicast	Multicast
	Broadcast	Broadcast	Broadcast
Supported Media	Fiber/Copper	Fiber/Copper	Fiber/Copper
Price	$8,550	$8,000	$4,500
Availability	24 Weeks	16 weeks	22 weeks (Jan 99)
Notes:	Rejected	Rejected	**Selected**
	Second Choice	Third Choice	Meets Requirements

VTT System Architecture
PM & Distribution Block Diagram

Provides the crew and subsystems the capability to control, monitor and protect electrical loads.

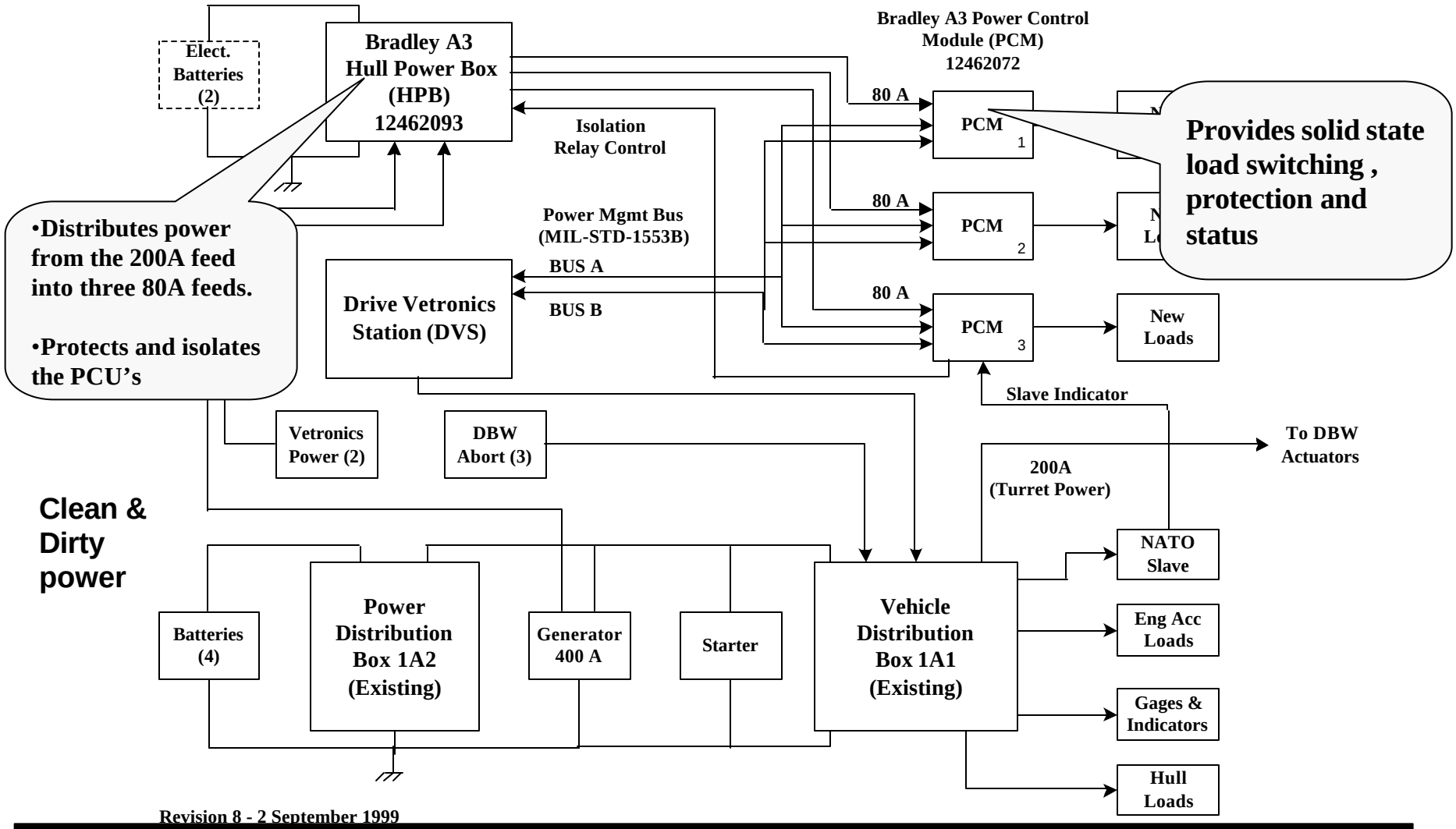

Provides solid state load switching , protection and status

•Distributes power from the 200A feed into three 80A feeds.

•Protects and isolates the PCU's

VTT System Architecture
Power Control Module

PCM Characteristics	PCM Option #1	PCM Option #2	PCM Option #3
Standardization	Mil-Std-461 &1275	**Mil-Std-461 &1275**	Mil-Std-461 &1275
Load Control & Status	Yes	**Yes**	Yes
Overload Protection	Yes	**Yes**	Yes
Master Power Override	Yes	**No**	No
Built in Test (BIT)	Yes	**Yes**	Yes
Switch Control Type	Solid State	**Solid State**	Solid State
Input Voltage	28 Volts DC	**28 Volts DC**	28 Volts DC
Input Current	80 Amps	**80 Amps**	80 Amps
Grounding	Separate Returns	**Separate Returns**	Separate Returns
Bond	Yes	**Yes**	Yes
Number of Outputs	10	**10**	11
Output Load Range	5 to 25A (1)	**1 to 25A (2)**	2 to 25A (2)
Serial Interface Type	EIA RS-485 (3)	**Mil-Std-1553 (1)**	Utility Bus / RS-485 (1)
Redundant Serial Bus	Yes	**Yes**	Yes
Automatic Reset	Yes	**No**	Yes
Cable Continuity Detection	Yes	**Yes**	Yes
Unit Cost Est.	$30K (2)	**$10K**	$7,250
Delivery	26 weeks	**26 weeks**	26 weeks
Notes:			
	Meets All Requirements	Meets All Requirements	(1) Will require UB PMC or IP
	High Cost	(1) Will require 1553 PMC or IP	Proprietary protocol
	(1) (6) 5A, (1) 10A, (3) 25A		
	(2) Esitmated cost		
	(3) One RS232 port	(2) (1) 2A, (4) 7A, (2) 15A, (3) 25A	(2) (6) 7A, (3) 15A, (1) 25A

VTT Hardware Architecture
Crew Vetronics Station (CVS)

Provides the capability for Soldier machine interface

Communicates to other devices via the High Speed Data Bus (Fibre Channel) to operate the vehicle

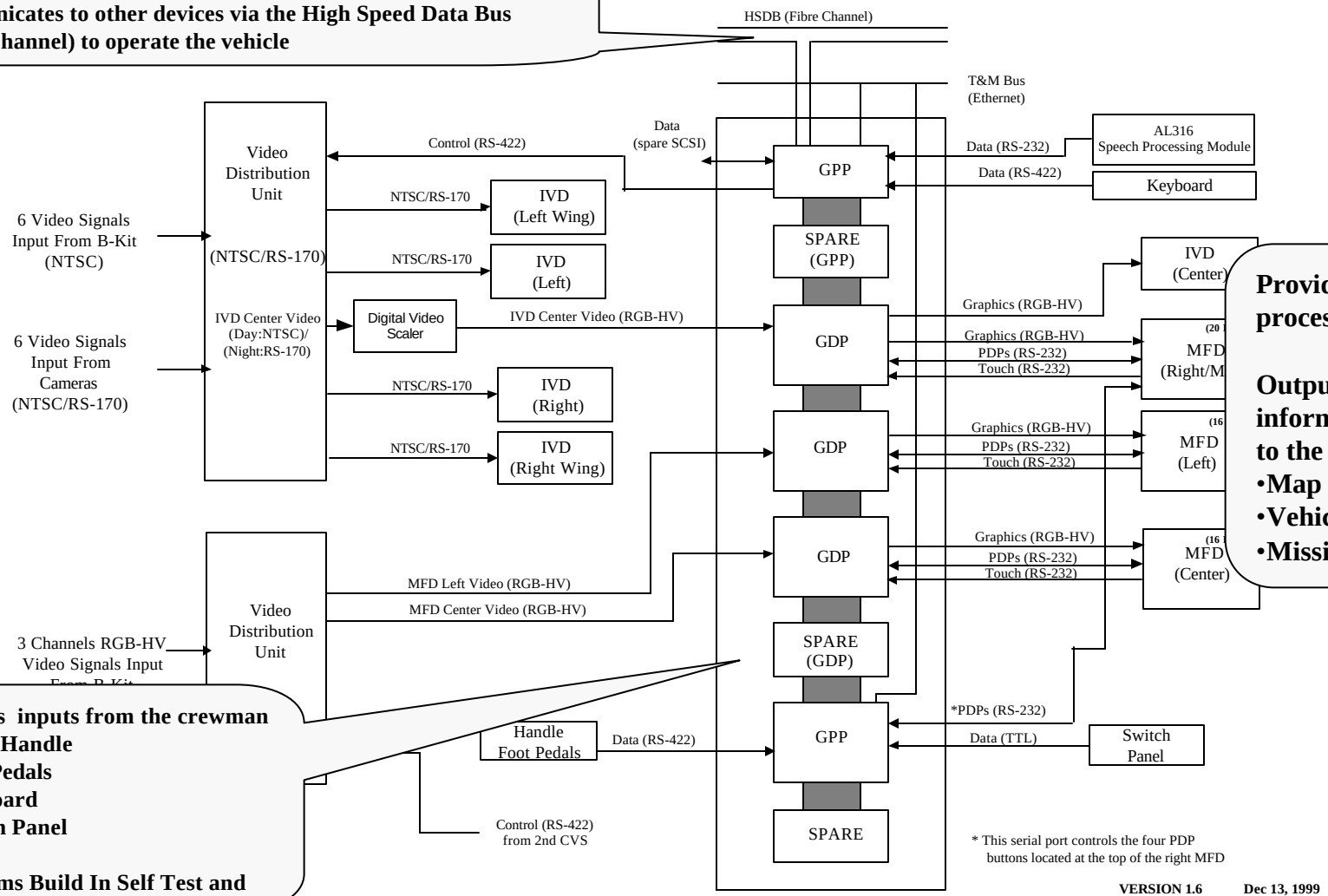

Provides graphics processing

Outputs vital information critical to the crewmen
- **Map**
- **Vehicle status**
- **Mission status, etc**

Process inputs from the crewman
- **Drive Handle**
- **Foot Pedals**
- **Keyboard**
- **Switch Panel**

Performs Build In Self Test and

VERSION 1.6 Dec 13, 1999

VTT Hardware Architecture
CVS GPP

Characteristic	GPP Option #1	GPP Option #2	GPP Option #3
Processor Type	**PowerPC G4 @ 366 Mhz**	PowerPC 750 @266Mhz,	Pentium II @ 266MHz
Dram Size	**256 Mbyte SDRAM,**	64 Mbyte DRAM,	128 Mbyte SDRAM
Cache Size / Type	**2Mbyte L2 cache,**	1 Mbyte L2 cache,	512 Kbyte L2 cache,
Flash Size	**48 Mbyte Flash,**	16 Mbyte Flash,	1 Mbyte Flash,
Non-Volitile Memory	**32 K NOVRAM,**	512K EEPROM,	24 Mbyte Disk on Chip
Ethernet Type	**10/100 Base T**	Fast	10/100 base T
SCSI Type	**SCSI-2,**	Ultra SCSI,	SCSI-2
Serial Interface	**4 serial ports,**	4 serial ports,	4 serial ports
I/O Support	**12 bit discrete I/O**	mouse, keyboard, floppy	parallel port, USB,
		&, parallel ports,	SVGA, IDE
PMC Support	**2 PMC sites**	2 PMC sites	2 PMC sites
Built in Test (BIT)	**Yes**	Yes	Yes
Temperature	**(-40 to 71 degree C)**	(-50 to 85 degree C)	(-40 to 71 degree C)
Shock	**40 g, half sine 11 ms**	20 g, half sine 11 ms	40 g, half sine 11 ms
Vibration	**10 g, 15 to 2KHz**	2g, 10 to 500 Hz	10 g, 15 to 2KHz
Unit Cost Est.	**$ 14,000.00**	$ 14,943.00	$ 10,120.00
Delivery	**22 weeks**	no commitment	
Notes:	**Selected**	Rejected	Rejected
	1) meets all requirements	1) Fibre Channel not supported	1) no software legacy
	2) software legacy	2) no discrete port	2) no discrete port
		3) mem expansion PMC site only	

VTT Hardware Architecture
CVS GDP

Characteristic	GDP Option #1	GDP Option #2
Processor Type	**C-80 processor @40 Mhz**	C-80 processor @60Mhz
VRAM Size	**8MB**	4MB
Video Output	**2 RGB**	1 RGB
Output Standard	**RS-170, RS-343, RS-330**	RS-170, RS-343
	VESA up to 1600x1200	1600x1280 @76 Hz
Video Input	**RS-170, RGB, PAL**	Monochrome, RGB, PAL
	NTSC	NTSC
Video Overlay	**Frame grabber, analog**	Frame grabber, analog
Serial Interface	**2 RS-423**	2 RS-423
I/O Support	**None**	Keyboard & Mouse (PS2)
Built in Test (BIT)	**Yes**	Yes
Temperature	**(-40 to 71 degree C)**	(-50 to 85 degree C)
Shock	**40 g, half sine 11 ms**	20 g, half sine 11 ms
Vibration	**10 g, 15 to 2KHz**	2g, 10 to 500 Hz
Unit Cost Est.	**$26,860.00**	$26,843.00
Delivery	**24 weeks**	24 weeks
Notes:	**Selected:**	Rejected
	Two independent video channels	one single video channel

VTT Hardware Architecture
CVS Chassis

Characteristic	Chassis Option #1	Chassis Option #2	Chassis Option #3
Number of slots	**8 slots**	7 slots	8 slots
VITA 1 & 1.1 compliant w/5 row P0, P1, & P2	**yes**	non-standard P0	yes
IEEE 1101.2 form factor	**yes**	yes	yes
Configurable back-plane to I/O panel interface	**yes**	yes	yes
Configurable I/O panel	**yes**	yes	yes
28 VDC Input Power	**yes**	yes	yes
Power Supply	**158.5 watt**	225 watt	250 watt
Temperature	**(- 40 to 85 degree C)**	(-55 to 85 degree C)	(-55 to 75 degreeC)
Humidity	**0 to 100%**	0 to 95%	0 to 95%
Shock	**20g, 11ms, half sine**	MIL-STD-810E (516.3)	20g, 11ms
Vibration	**0.1g2/Hz, 15 to 2000 Hz**	MIL-STD-810E (514)	0.1g2/Hz, 15 to 2000 Hz
Unit Cost Est.	**$26,500**	$29,500	$39,086
Delivery	**24 weeks**	26 weeks	26 weeks
Notes:	**Selected**	Rejected	Rejected
	meet all requirements	non-standard P0	price

VTT Hardware Architecture
Drive Vetronics Station (DVS)

Provides primary interface between the VTT crewstations and the Drive-By-Wire Subsystem

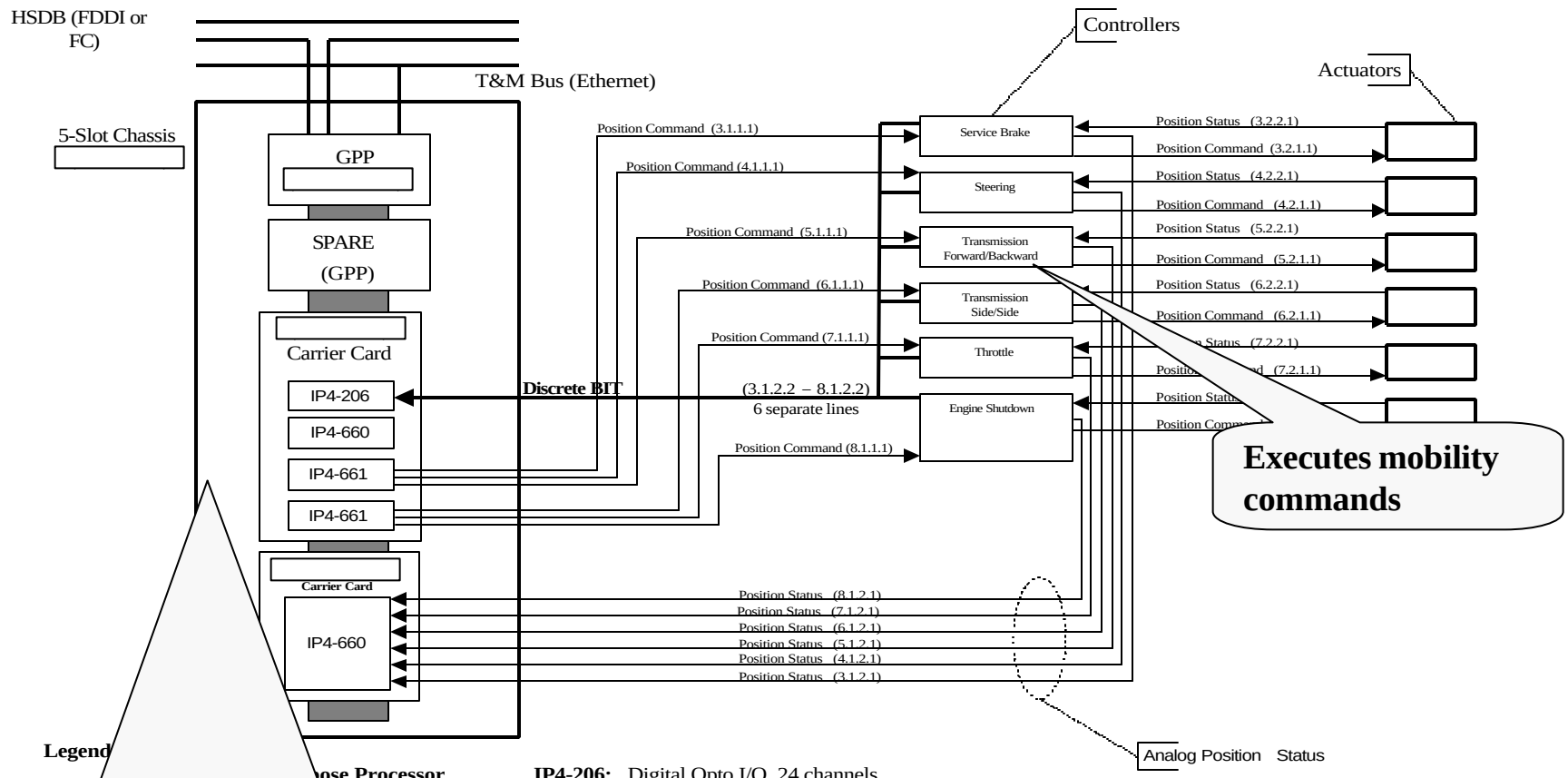

Executes mobility commands

Communicates mobility and automotive commands/status with active "Driver"
Provides BIT and Data Logging information

Jan 6, 1999

VTT Hardware Architecture
Video Distribution Diagram

Provides the capability to distribute live and simulated video from cameras, FLIRs, and B-Kit to Crew Station IVDs, and MFDs.

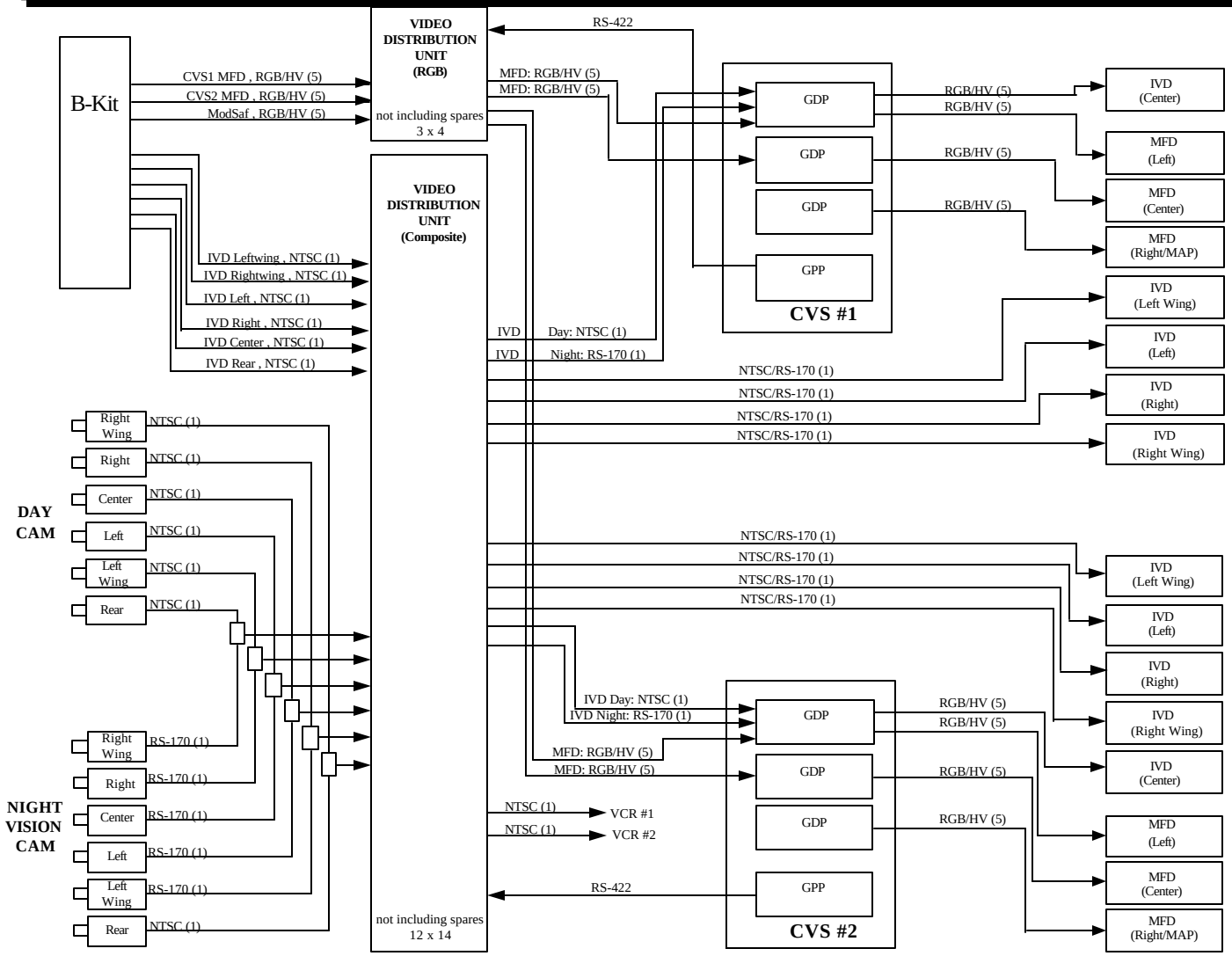

Supported video formats: NTSC/RS-170 and SVGA

VTT Hardware Architecture
VDU

Characteristic	VDU	VDU	VDU
	Option #1	Option #2	Option #3
Switch Matrix 24x26 min	32x32		
(18x14 NTSC, 6x12 SVGA)		2x(16x16 NTSC), 8x16 SVGA	23x16 NTSC, 6x12 SVGA
Video formats	NTSC, RS-170, SVGA	NTSC,RS-170,SVGA	NTSC,RS-170, SVGA
Active Switching	yes	yes	no
Switch Element	solid state	solid state	solid state
Bandwidth	DC - 120 MHZ	DC - 125 MHZ	DC - 100 MHZ
75 ohms I/O interface	yes	yes	yes
Control	RS-232, GPIB	RS-232, RS-422, GPIB	RS-232, RS-422
Dimension (HxWxD)	4 each, 3.5"x19"x16"	8.72"x19"x20"	8.73"x19"x17"
Power requirement	120 VAC	120 VAC	120 VAC
Mounting	Rack mount	rack mount	rack mount
Weight	n.a.	n.a.	5 lb
Temperature	0 to 70 degree C	0 to 60 degree C	0 - 60 degree C
Shock	n.a.	n.a.	
Vibration	n.a.	n.a.	
Unit Cost	$15,360.00	$10,600.00	$8,000.00
Engineering Cost	0	0	$3,750.00
Delivery	8 weeks	8 weeks	
Notes: All data shown are commerial grade, decision is not final on which vendor			

VTT Software Architecture
Context and Level 1 DFD

VTT Context Diagram

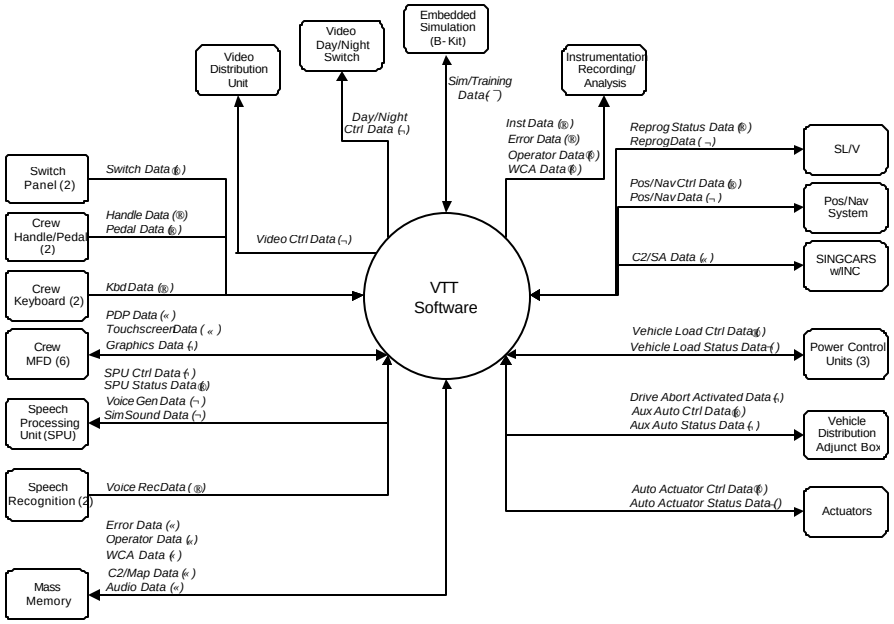

VTT Level 1 DFD

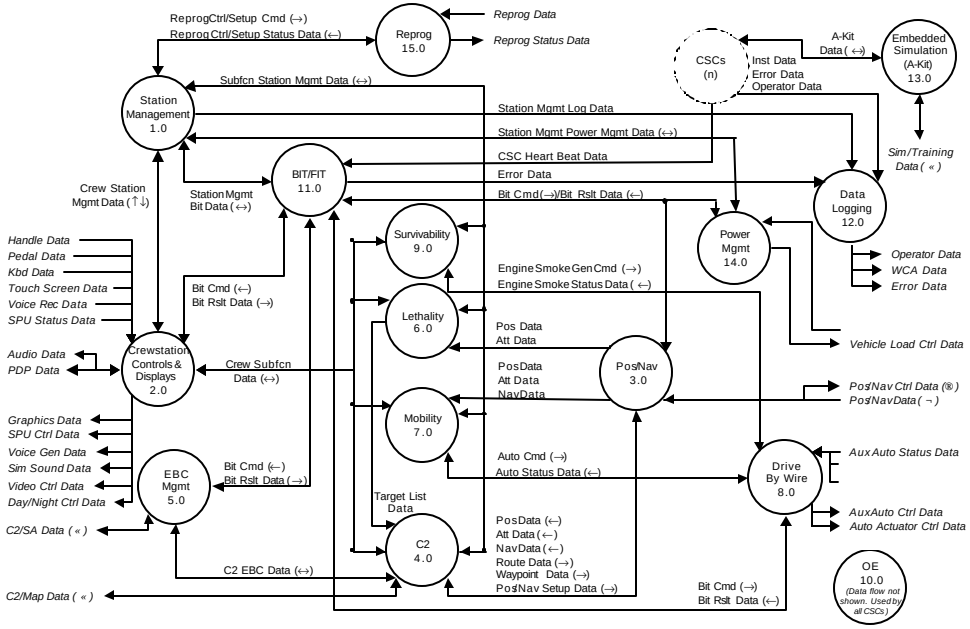

VTT Software Architecture
GOA Model – Application/System Services Layer

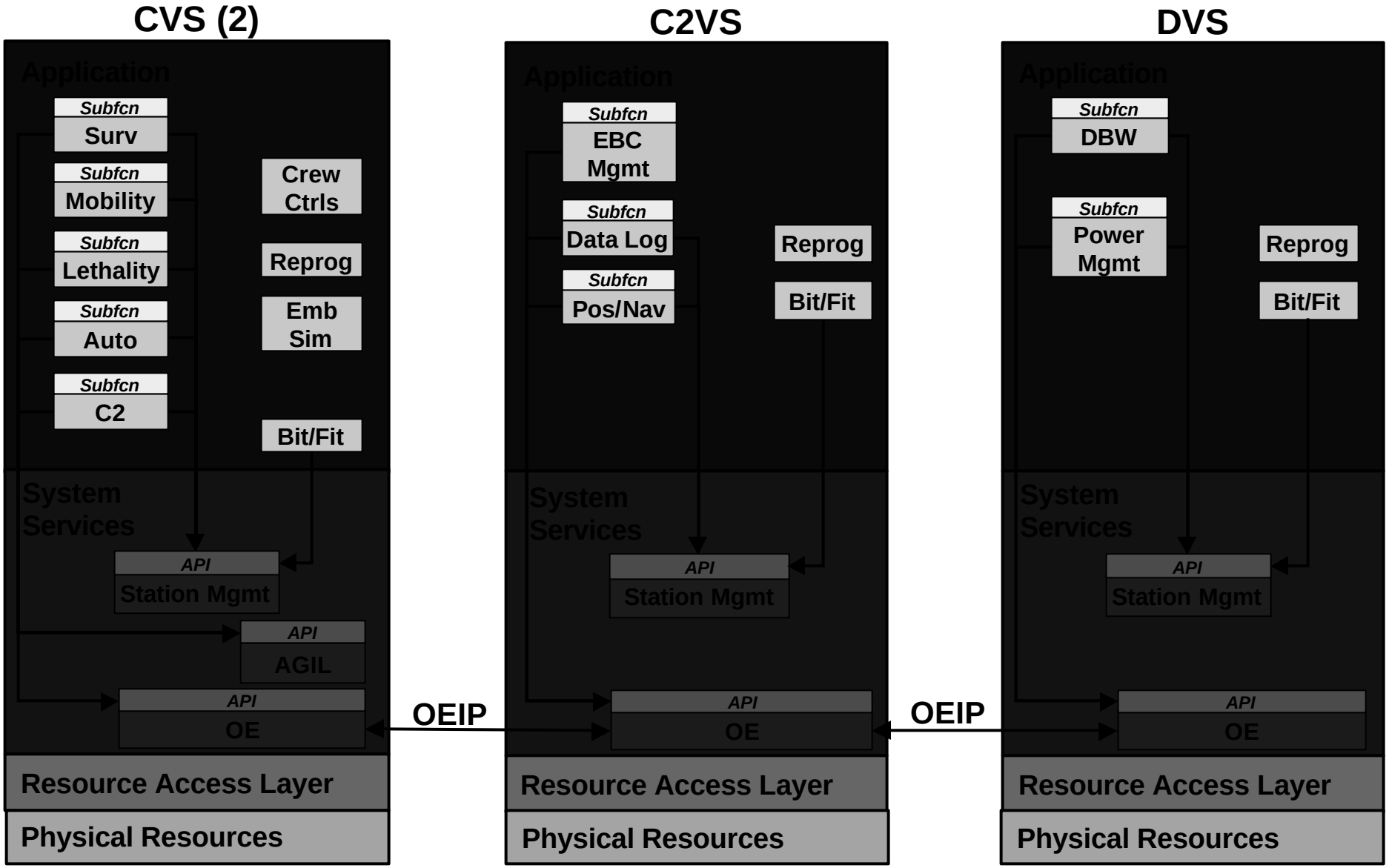

GOA: Generic Open Architecture

VTT Software Architecture
GOA Model – System Services Layer & Below (CVS)

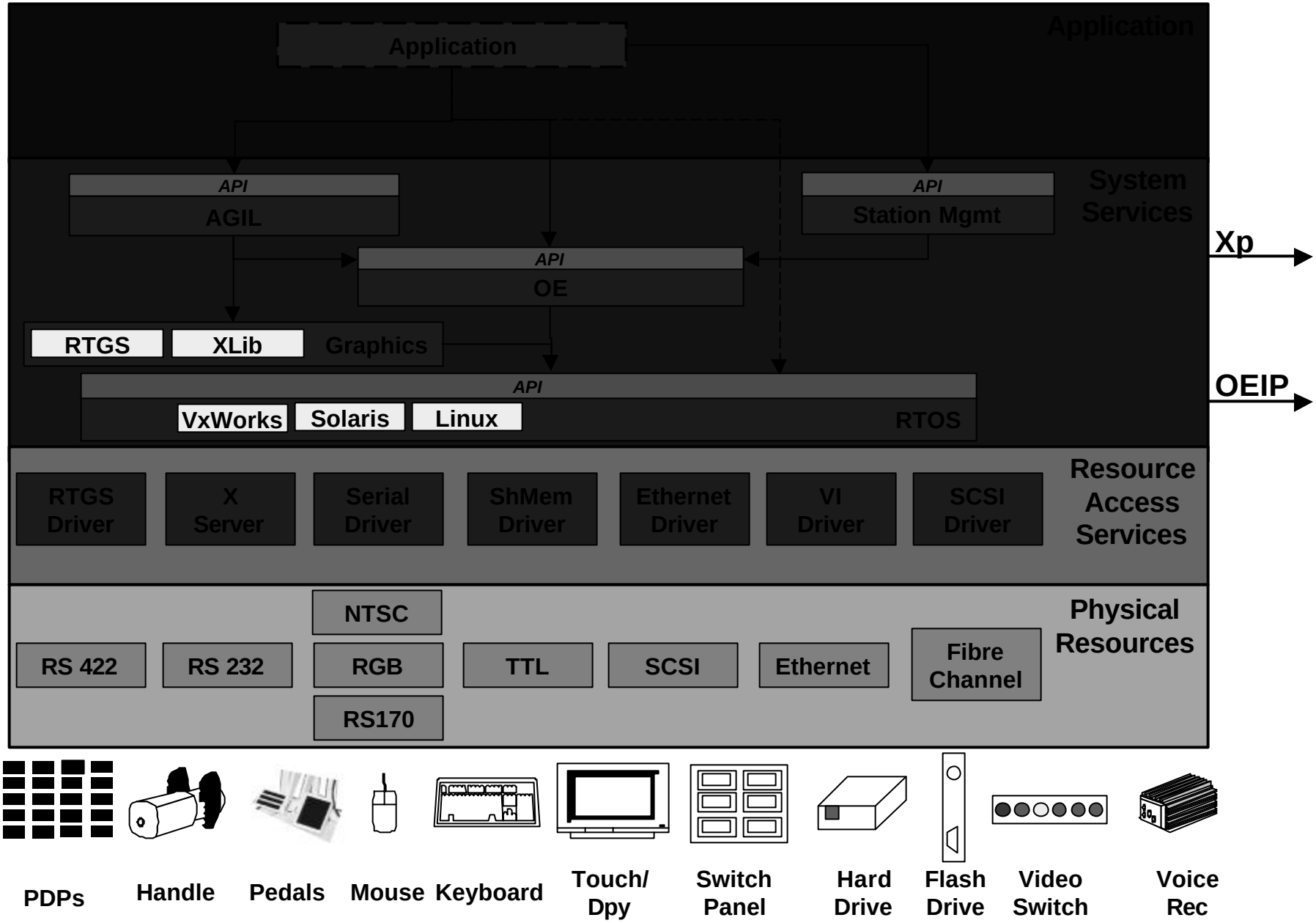

TARDEC Vetronics Architecture - Lessons Learned

- Architectures will evolve, specify to utilize well established open standards.
- Focus on interfaces, don’t mandate implementations/products (especially proprietary).
- Don’t be trapped by current hw limitations (provide flexibility where possible).
- Provide traceability from APIs to defined system requirements.
- Define APIs/middleware to isolate dependencies, ease porting, and delay hw buys.
- Define APIs/middleware to be “thin” in order to map to a variety of implementations.
- Define APIs/middleware such that they can be replaced by emerging standards as they mature and are accepted by industry and DoD.
- Design APIs for reuse and interoperability (define physical/logical interfaces).
- Design APIs for testability (carry through conformance/validation requirements).
- Don’t lock into specific paradigms (e.g. patterns, languages, methodologies).
- Include industry, academia, and standards bodies to the degree possible when defining new APIs and/or middleware.