M1A2 SEP Tank
Embedded Training Technology

Carl Hobson
President & CEO

Oasis Advanced Engineering

Email: hobson@OasisAdvancedEngineering.com
Phone: (248) 373 – 9800 • Fax: (248) 373 – 9898

Embedded Training Technology

Yesterday	Today	Tomorrow	Future
Laboratory Environment	Virtual Target in Virtual Environment	Virtual Target in Virtual/Live Environment	Future Combat Systems
• Contractor IR&D • INVEST STO	• M1A2 SEP hw, sw • MWTB Vehicle sw • ModSAF	• FBCB2 • AGTS sw • INVEST Technology	**Fully Embedded Training**

Crawl → Walk → Run

Laboratory Based Research & Development

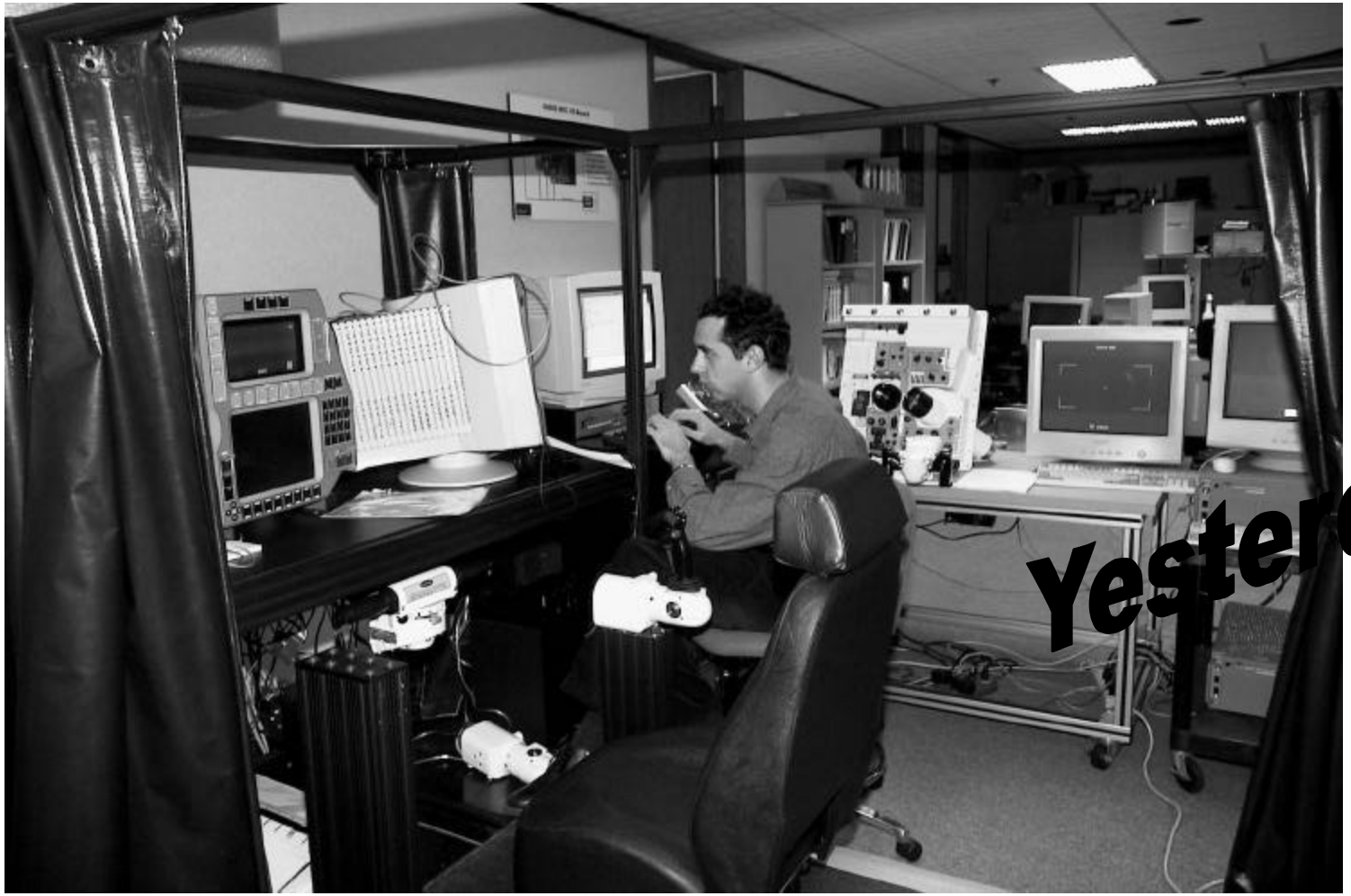

Reconfigurable Test Platform

Mobile Laboratory

- **Utilized for Vehicle-on-the-Move Testing**
- **AM General M1097A2 HMMWV with a Military Shelter**
  - 15KW Generator
  - 24,000 BTU ECU

Mobile Crew Station Simulation Laboratory (MCSSL)

Facilitates M1A2 SEP Tank Embedded Training Technology Implementation

- Incorporates M1A2 SEP Tank LRUs or Commercial Equivalents
- Utilizes M1A2 SEP Tank Software
- Pre-platform Integration Risk Reduction

Today

Cost Effective • Reconfigurable • Mobile

MCSSL Top Level Functional Diagram

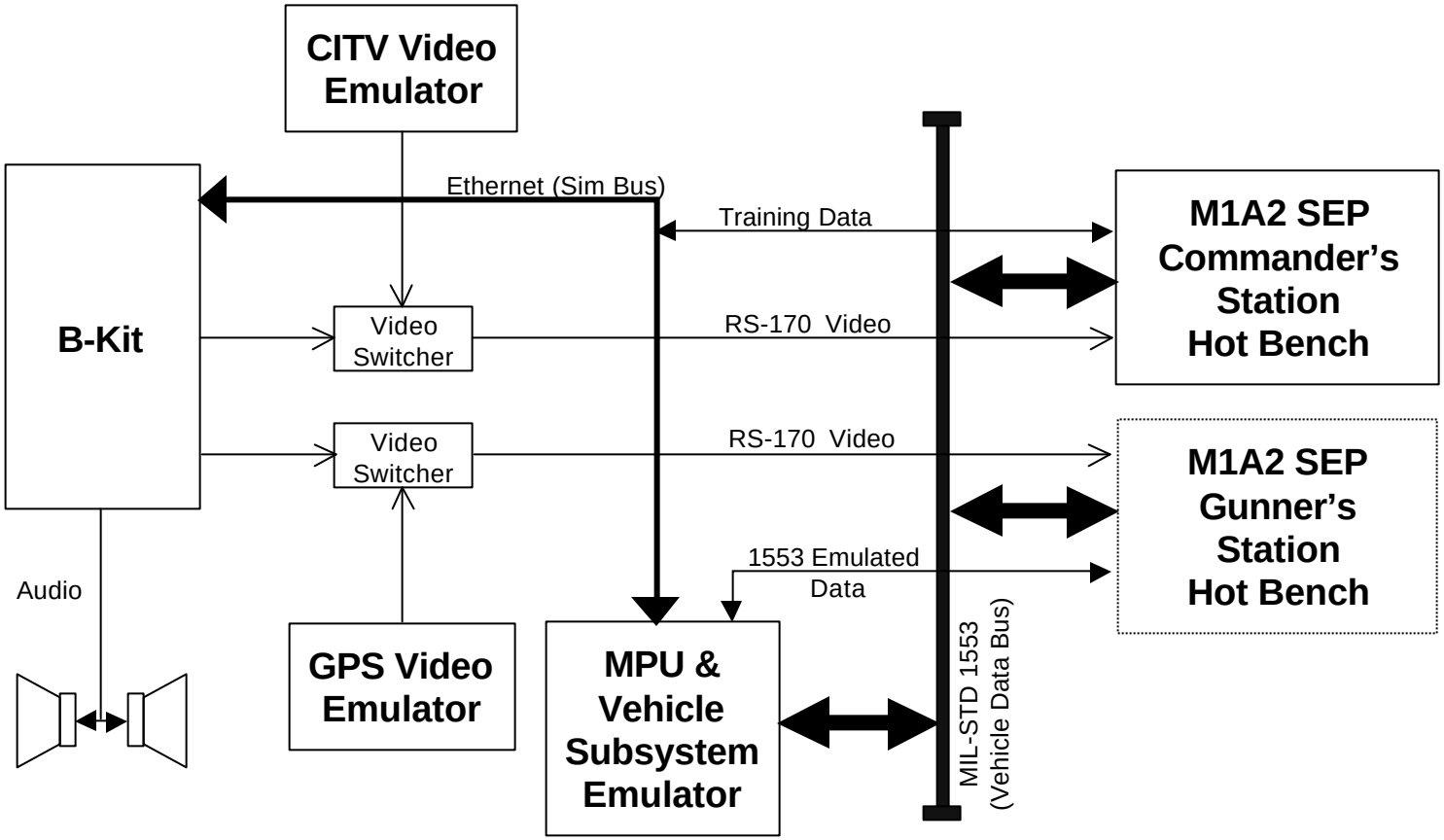

MCSSL Detail Architecture Diagram

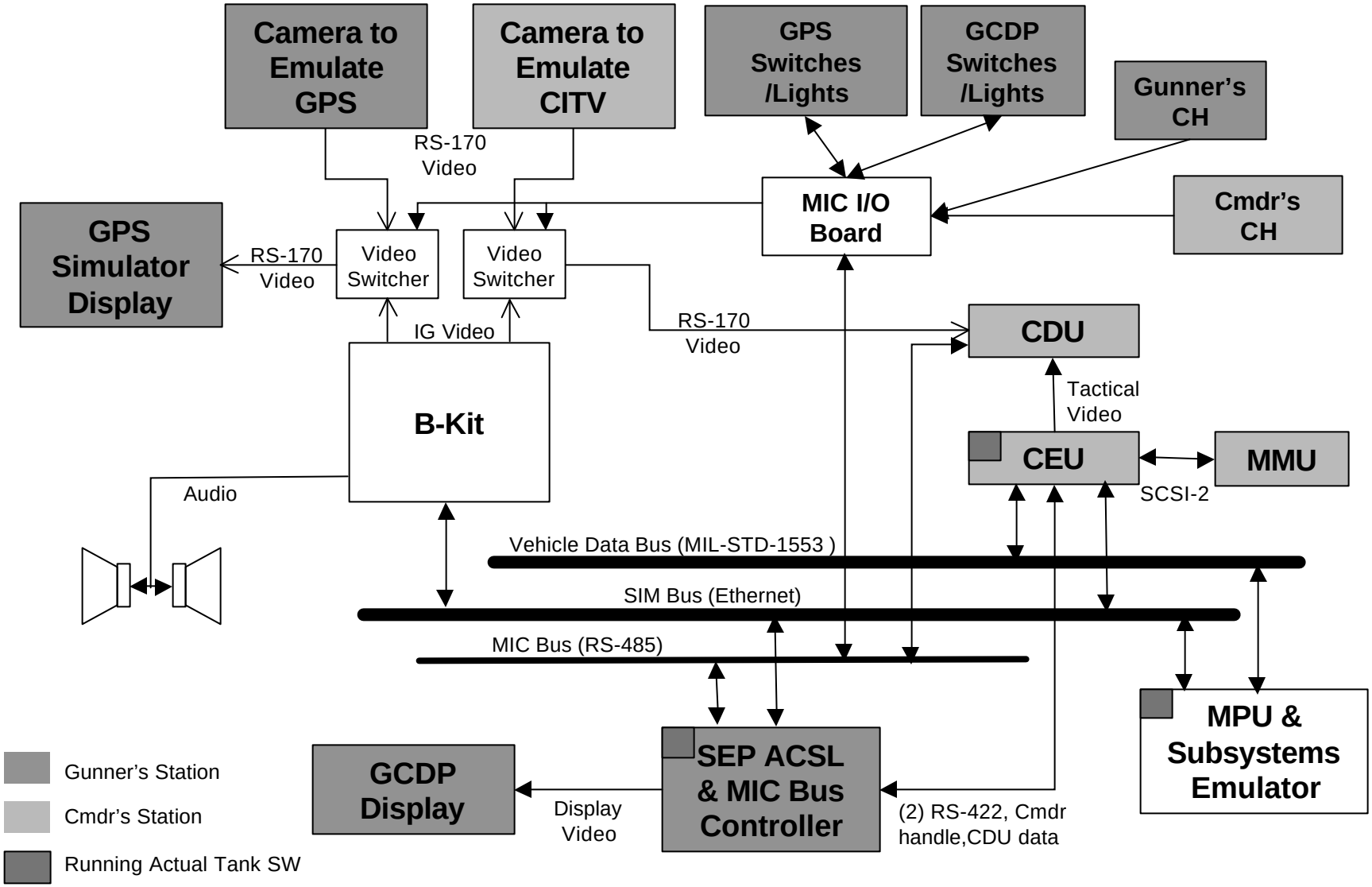

B-Kit Architecture Diagram

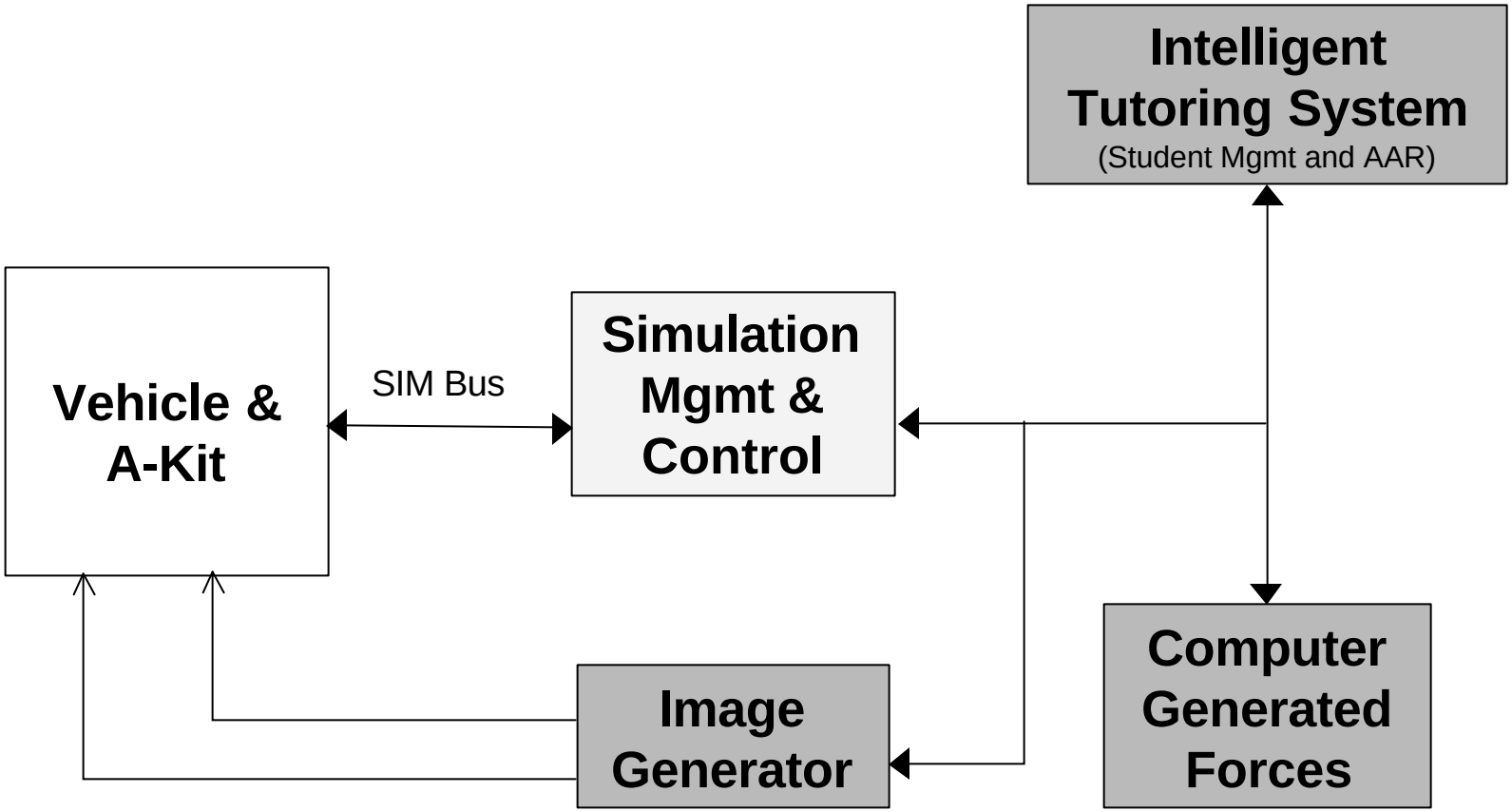

M1A2 SEP Tank

M1A2 SEP Tank - Embedded Training Demonstrations

General Capabilities	Objective Demo	Initial Demo AUSA
Full Virtual Environment	X	X
After Action Review	X	No
AGTS Software Integration	X	No
Distributed Interactive Simulation (DIS)	X	Limited
Gunner Station Capabilities		
Gunner's Primary Sight (GPS)	X	Limited
Gunner's Control Display Panel (GCDP)	X	X
Gunner's Control Handle	X	X
Commander Station Capabilities		
Commander's Independent Thermal Viewer (CITV) Sight	X	X
Command & Control (including FBCB2)	X	No
Integrated Training Menus on CDU	X	X
Commander's Control Handle	X	X
Hardware Features		
Ruggedized Embedded Training LRUs	X	X
A-Kit for M1A2 SEP Tank	X	Limited

M1A2 SEP Tank Embedded Training System Architecture

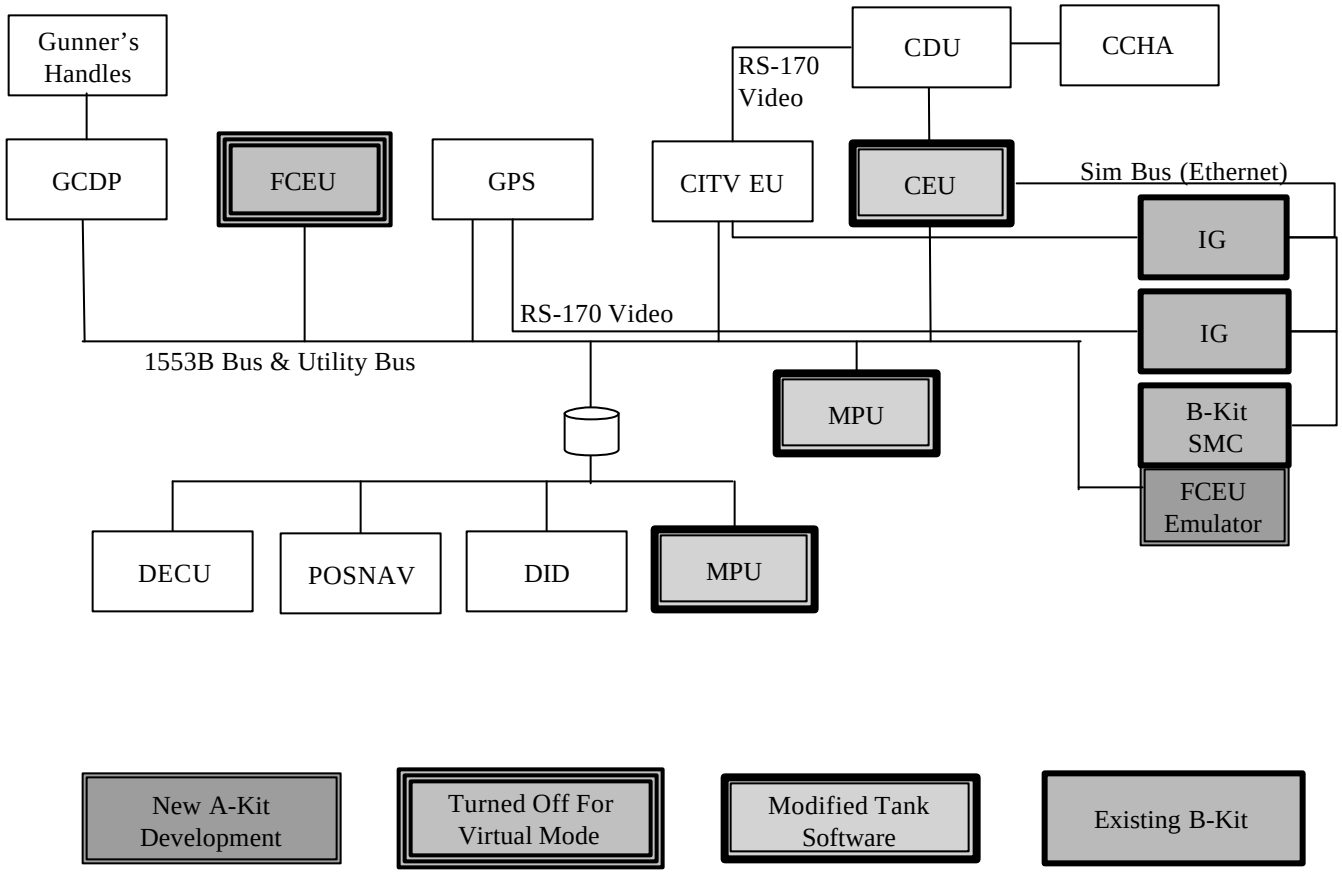

B-Kit Architecture

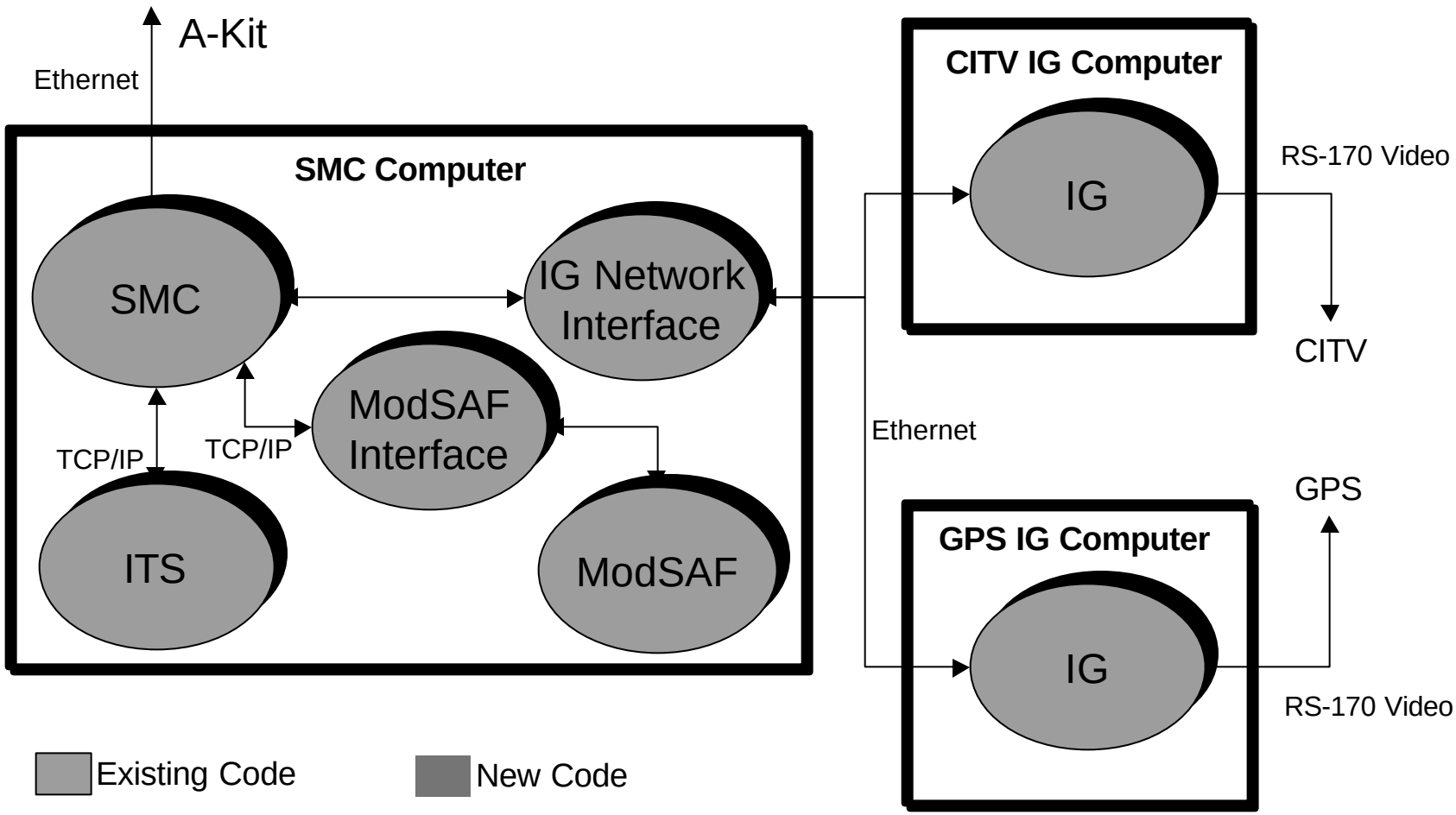

Commander's Electronic Unit (CEU) Architecture

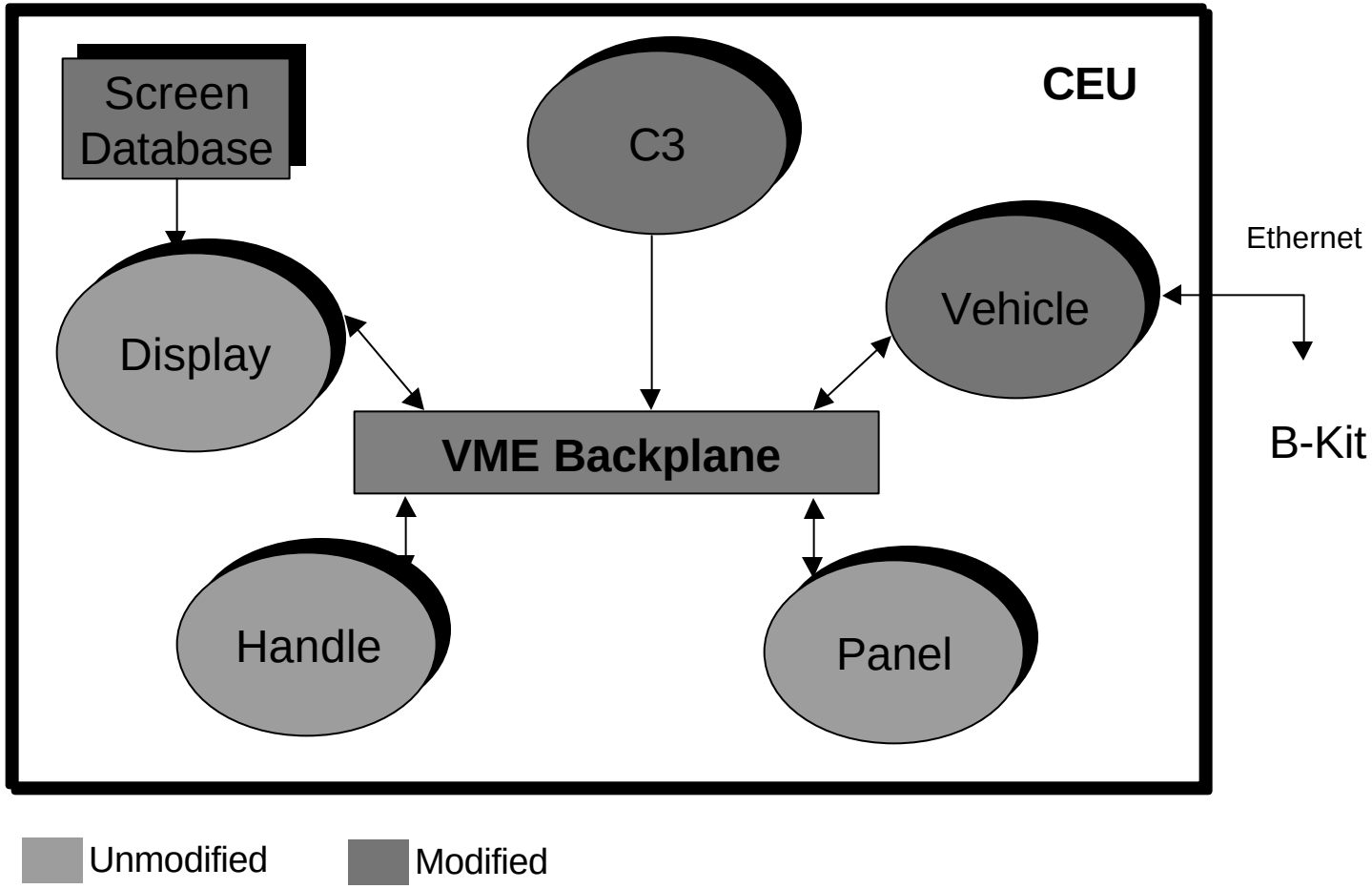

FCEU Emulator Architecture

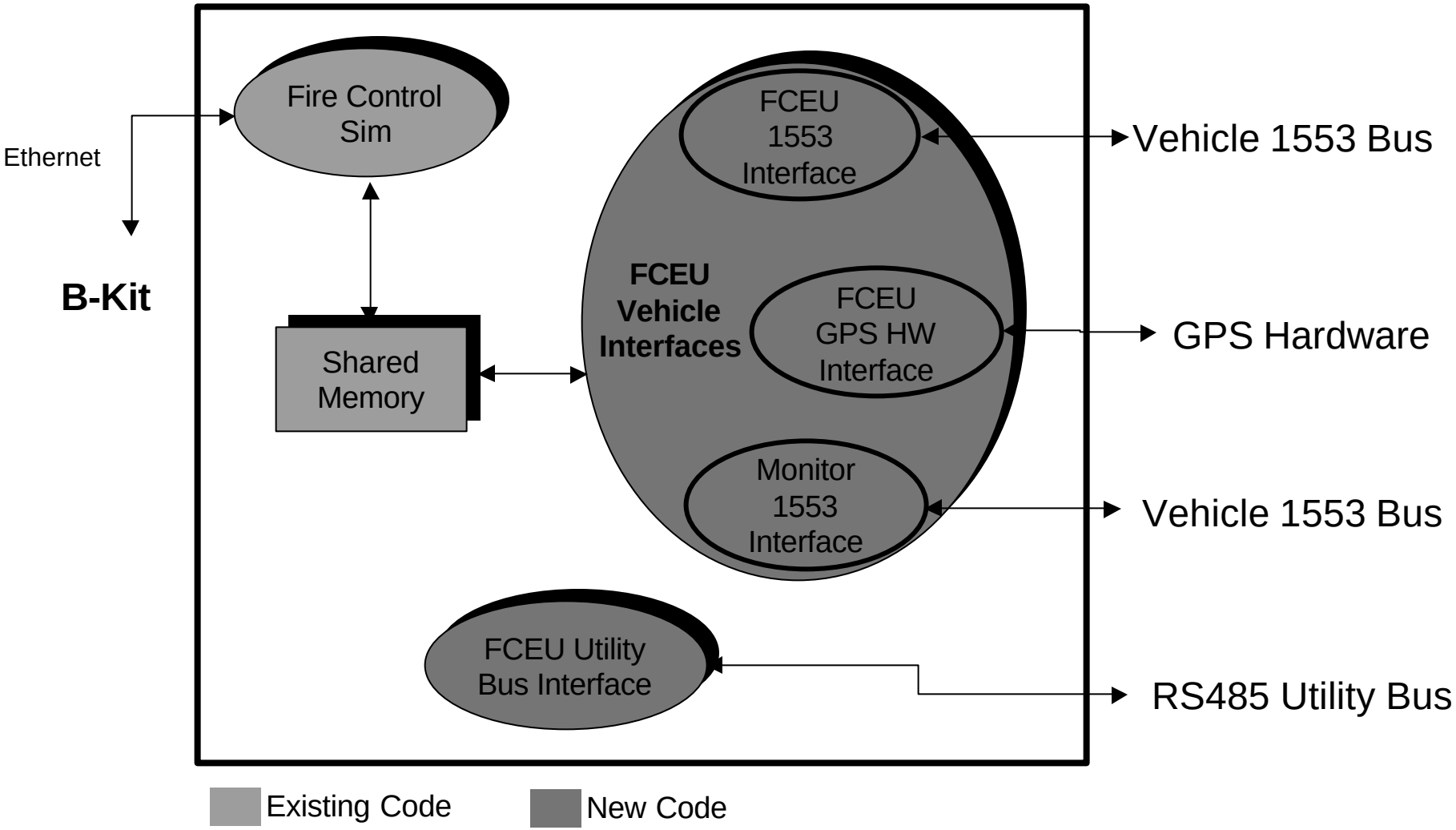

Technical Approach - Building Block Solution

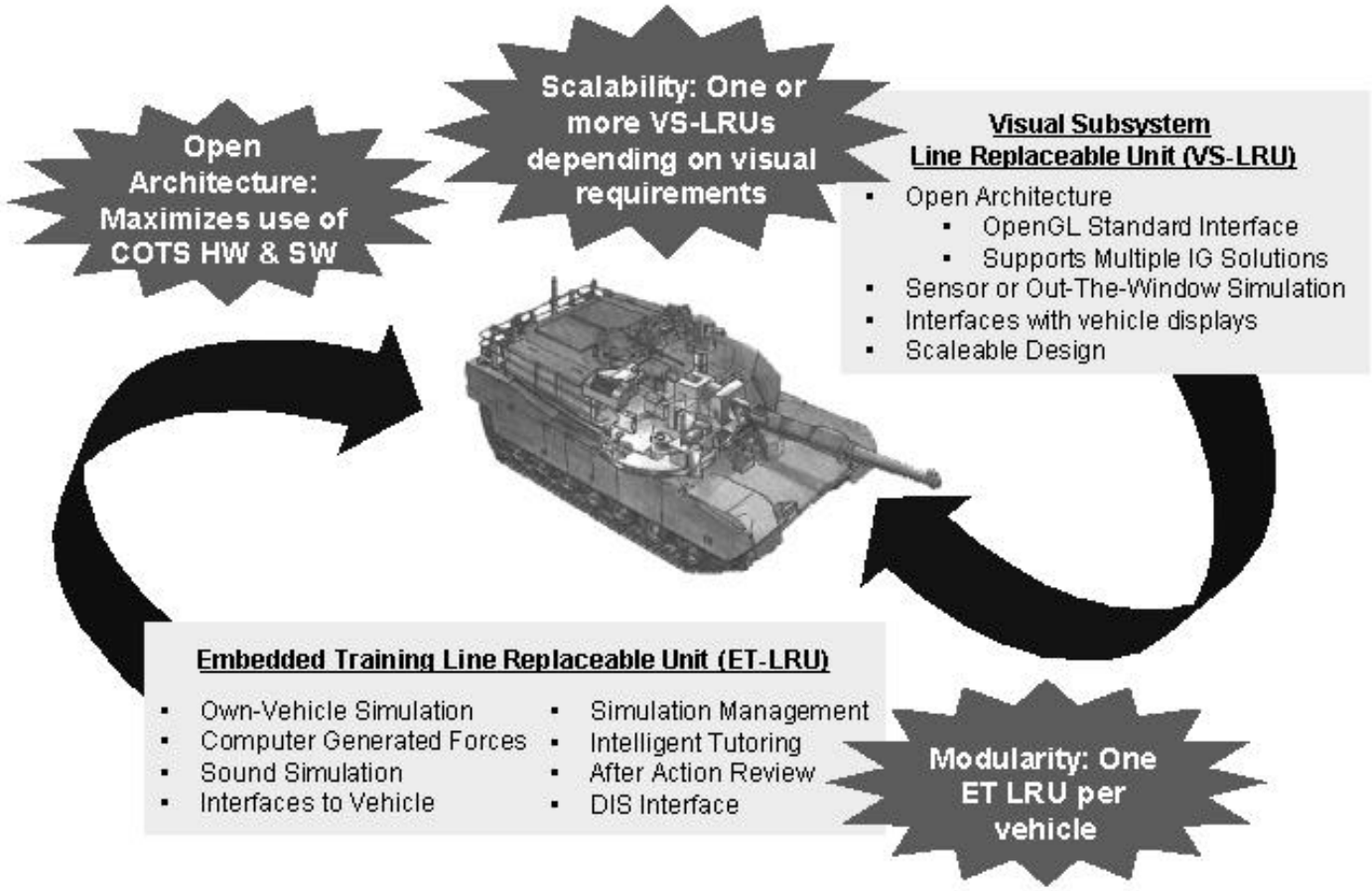

A building block approach using an ET-LRU and multiple VS-LRUs allows for maximum flexibility and cost effectiveness

Building Block Approach Advantages

Attribute	Advantages
Placement	Placement of multiple small boxes will be easier to achieve within the tight confines of the legacy ground combat vehicle.
Environmental	Distribution of the heat loads assists in heat load management.
Power Management	Distribution of the power loads assists in power management.
Scalability	Additional capabilities (e.g., adding the driver) can be achieved by adding a VS-LRU in the driver's area.
Modularity	System modularity is achieved by logical distribution of software and hardware functions allowing changes in subsystem configuration without impacting the entire architecture.
Graceful Degradation	Failure of a single VS-LRU does not imply total system failure.

ET & VS LRUs – Maximum Use of Common COTS SRUs

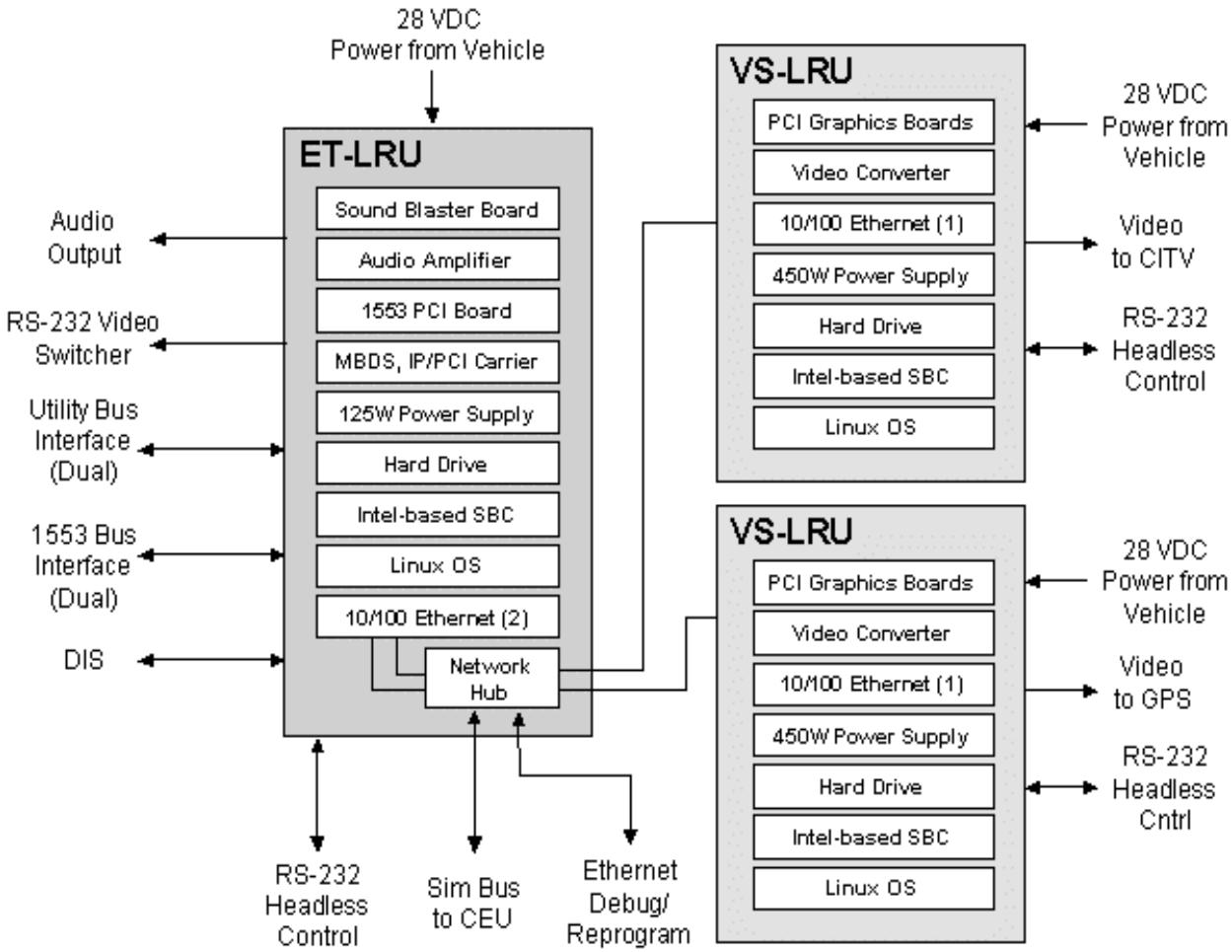

AUSA Demo Hardware Architecture

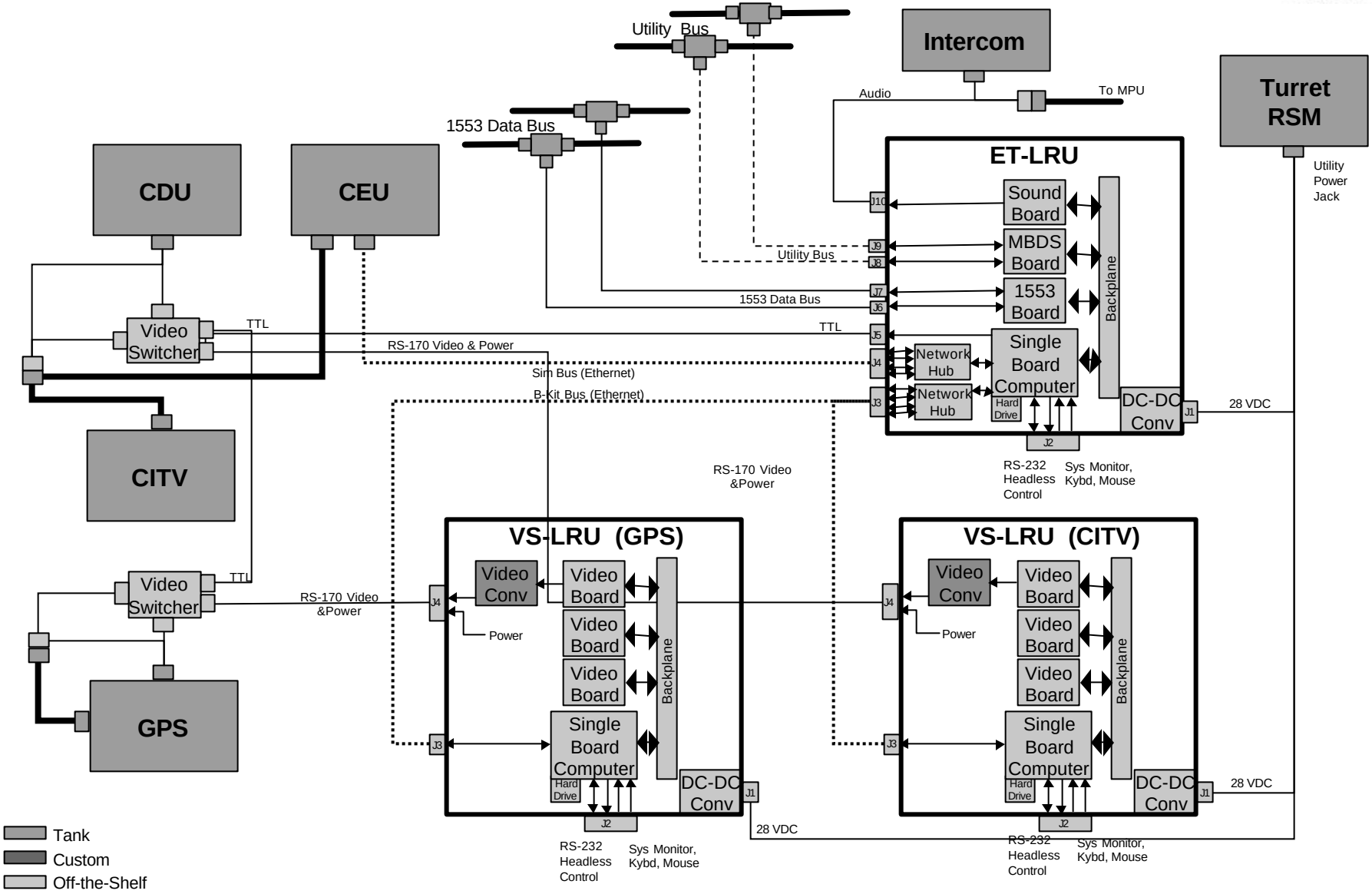

AUSA Demo Prototype LRUs

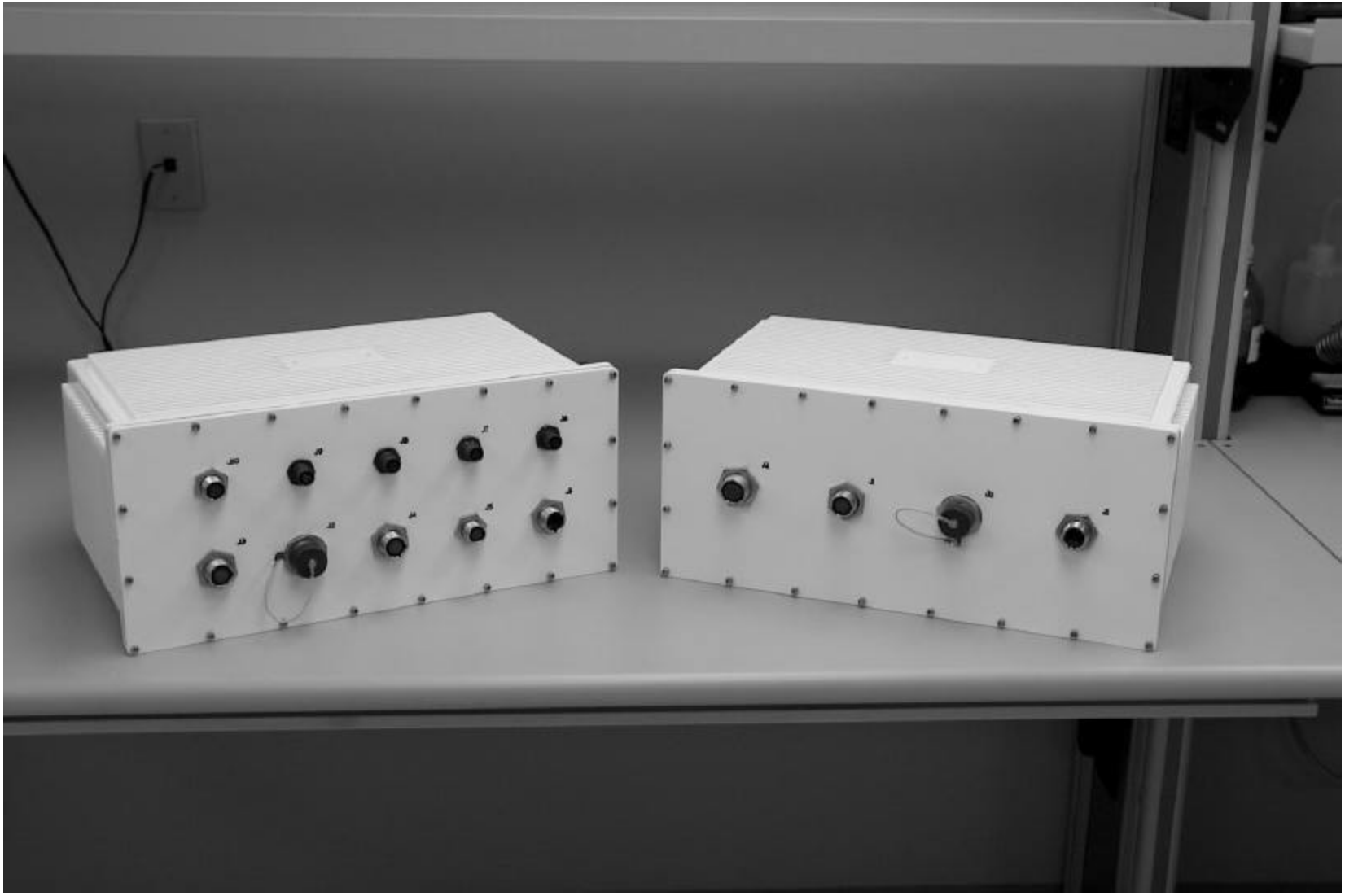

Visual Subsystem (VS) Prototype LRU

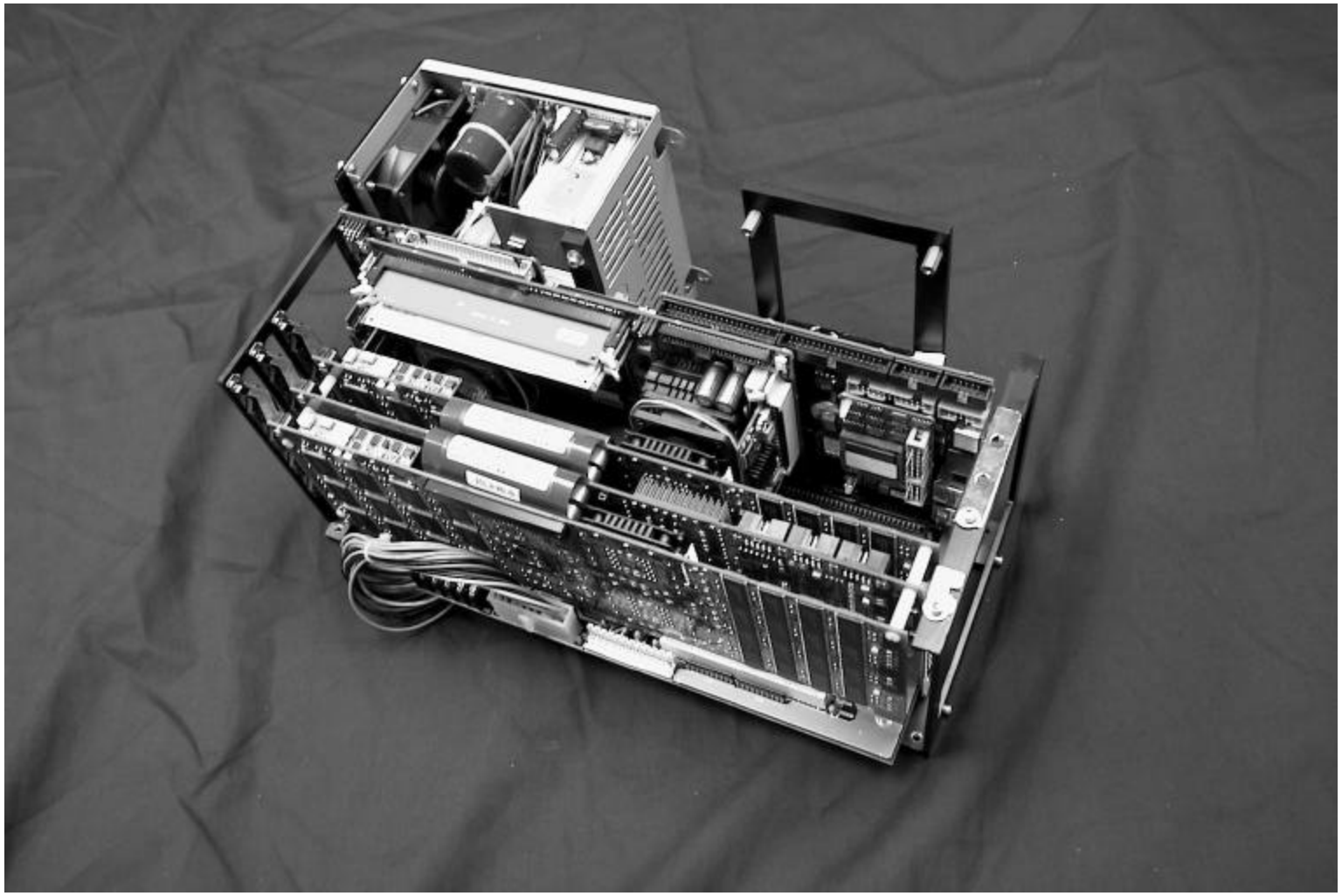

Embedded Training (ET) Prototype LRU

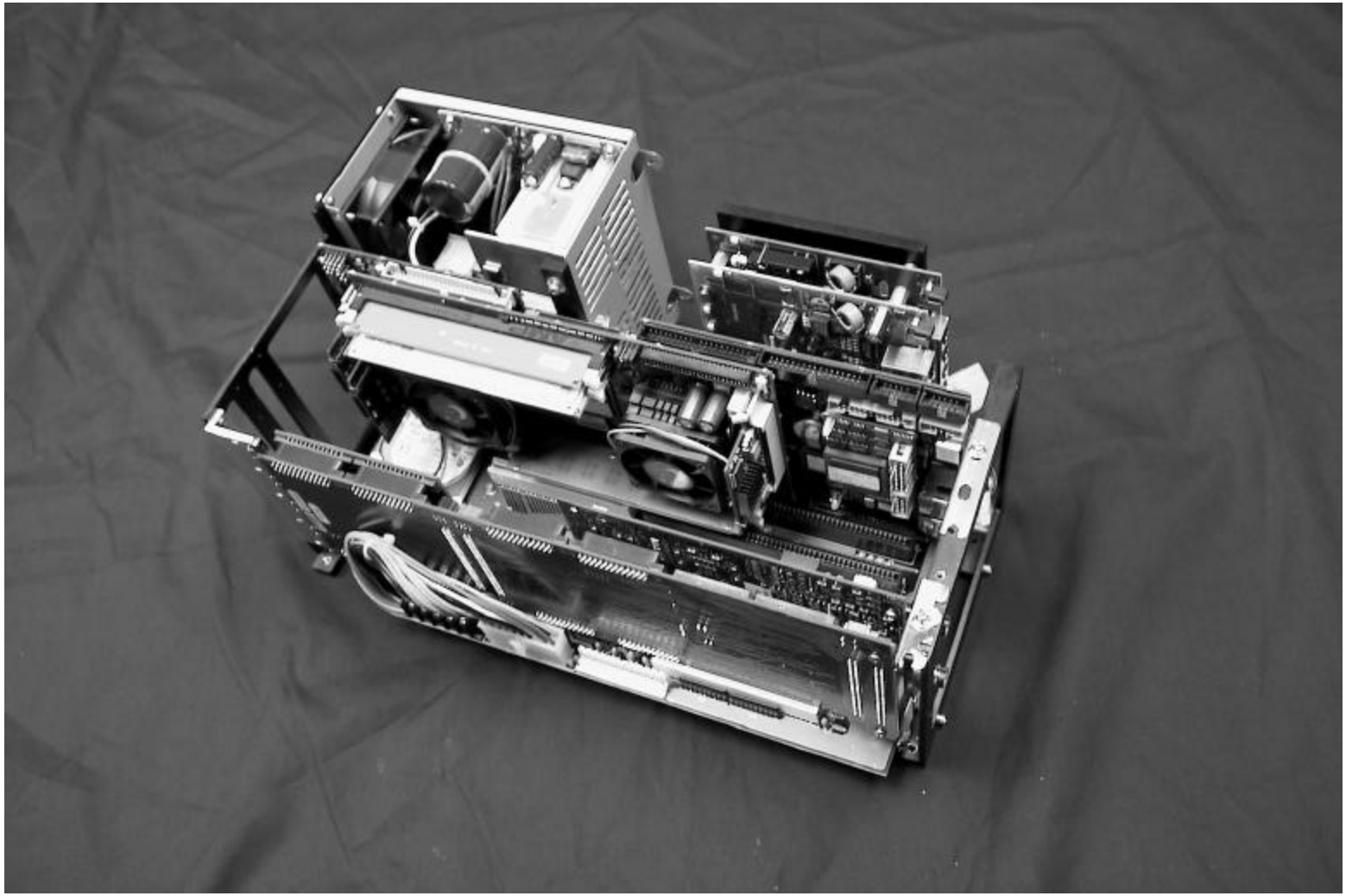

M1A2 SEP Tank
Embedded Training Technology

M1A2 SEP Tank Block Upgrade
FY 03/04

Requirements

Technology Transfer

MCSSL (ET R&D)

- **Design & Documentation**
- **A/B-Kit Development**

- Precision Gunnery
- Full Crew Training
- Mission Planning/Rehearsal
- Mobilility Training
- Section/Platoon Gunnery
- Combined Arms Training

Embedded Training Technology Challenges

- **Medium Risk Technology Challenges**
  - Hardware Miniaturization, Ruggedization, Heat Management
  - Secure High Bandwidth Inter-vehicular Communication
  - Real-time Database Development & Deployment
- **High Risk Technology Challenges**
  - Virtual Image Insertion into Live Imagery
  - Synchronized Semi-Auto Forces

Future Combat Systems

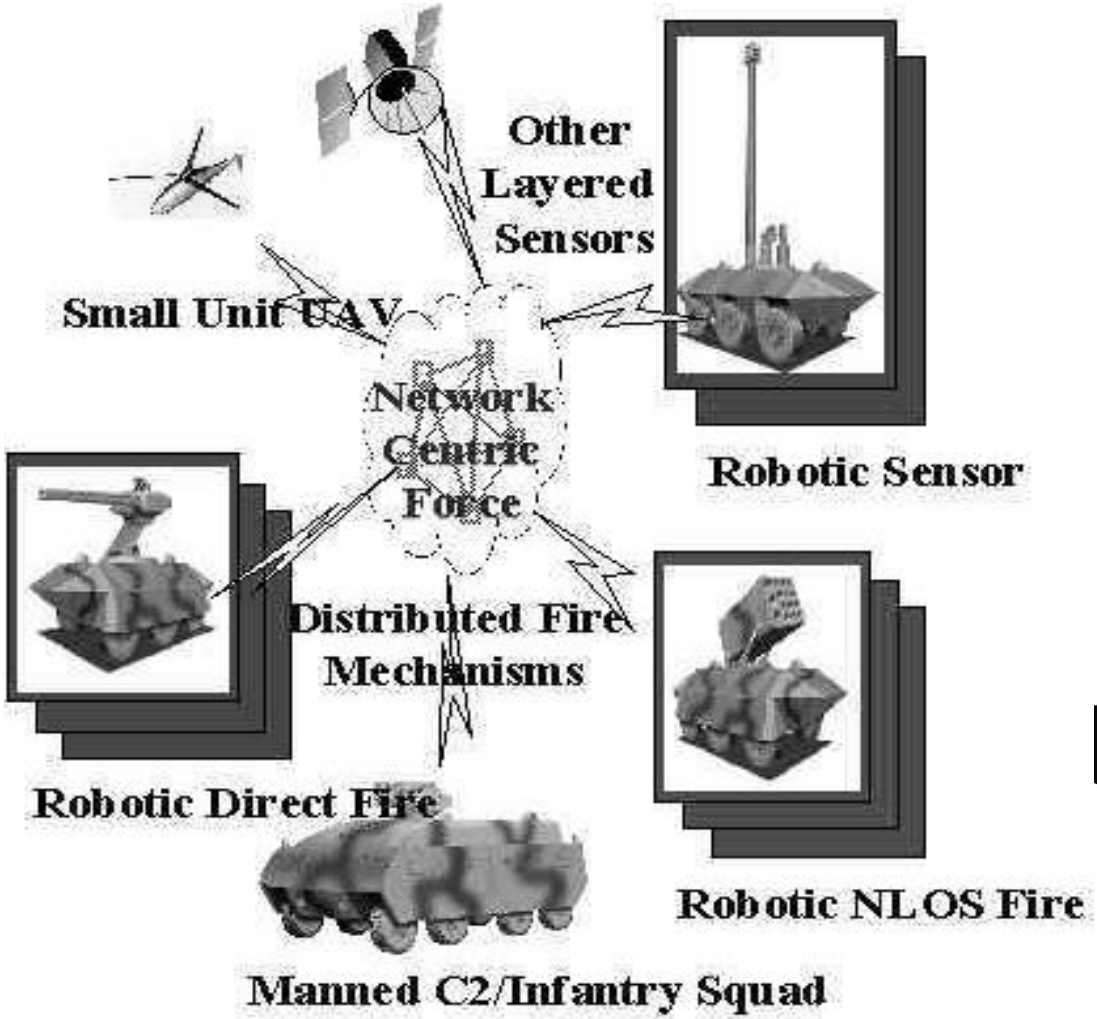

Future

Embedded training