Vetronics Technology Demonstrator Display Technology

Greg Downs
Product Manager
Computing Device Canada
phone (613) 596-7255
fax (613) 596-7697
e-mail: greg.downs@cdott.com

Overview

- Computing Devices Flat Panel Displays
- Vetronics Technology Demonstrator
  - Program Requirements
  - Crew Station
  - Display Content Requirements
- Display & Touch Panel Technology Review
- Display Architecture
- Display Characteristics

Computing Devices Flat Panel Displays

- Proven Military Flat Panel Display Expertise
  - Thousands of FPD's sold into land, naval and airborne applications
  - >15 years of FPD production experience
  - Participation in DARPA Technical Re-Investment Program (TRP)
  - Participation in United Stated Display Consortium (USDC) Military and Aerospace User Group (MAUG)
  - Member of the Society for Information Display (SID)

Vetronics Technology Demonstrator

- US Army TACOM Sponsored Program
  - Develop and demonstrate next generation crewstation
  - Crew stations evaluated in both lab and vehicle environments
  - Vehicle trial scheduled for summer 2001

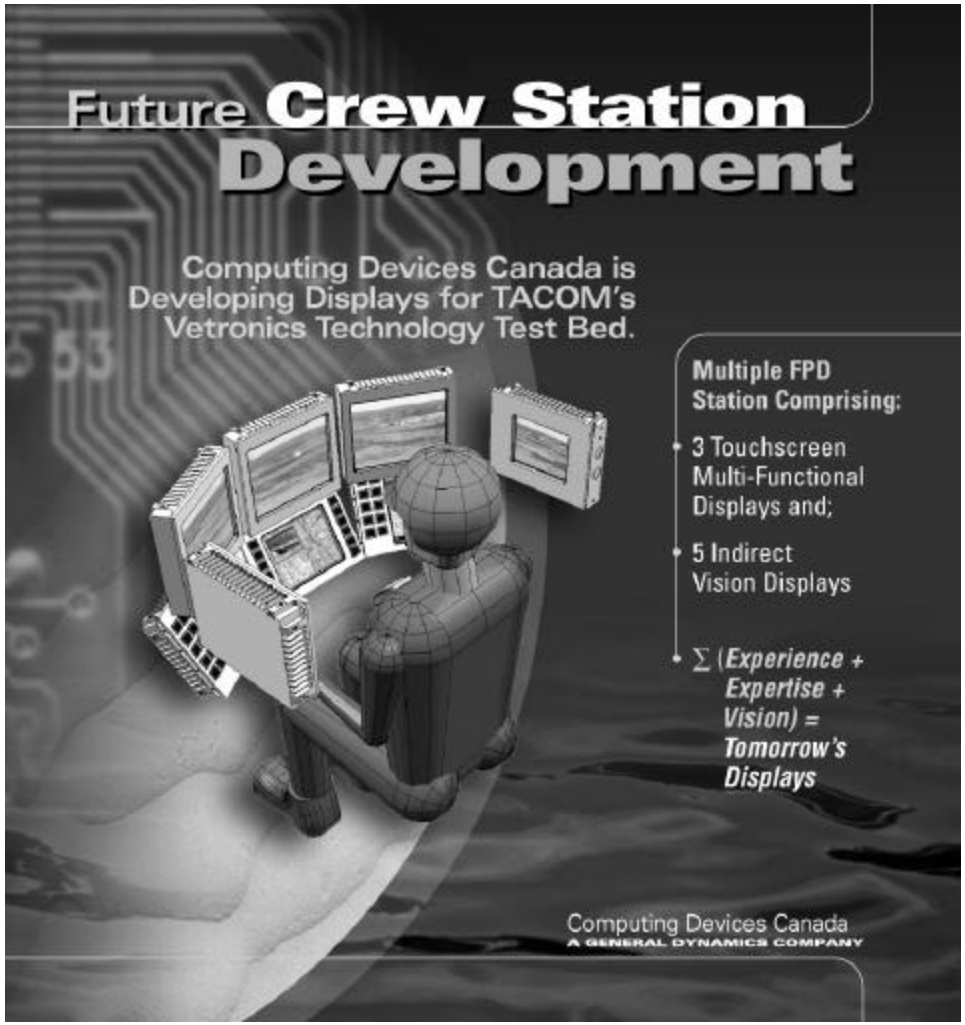

Vetronics Technology Demonstrator

- Requirements
  - Rugged
  - High performance
  - Low cost (both NRE & recurring)
  - State of the art (latest fieldable technology)
  - Flexible - must enable system functionality to be changed with a minimum of impact on the crewstation design

Crew Station Concept

Indirect Vision Displays (IVD's)

Multi-Function Displays (MFD's)

Display Content Requirements

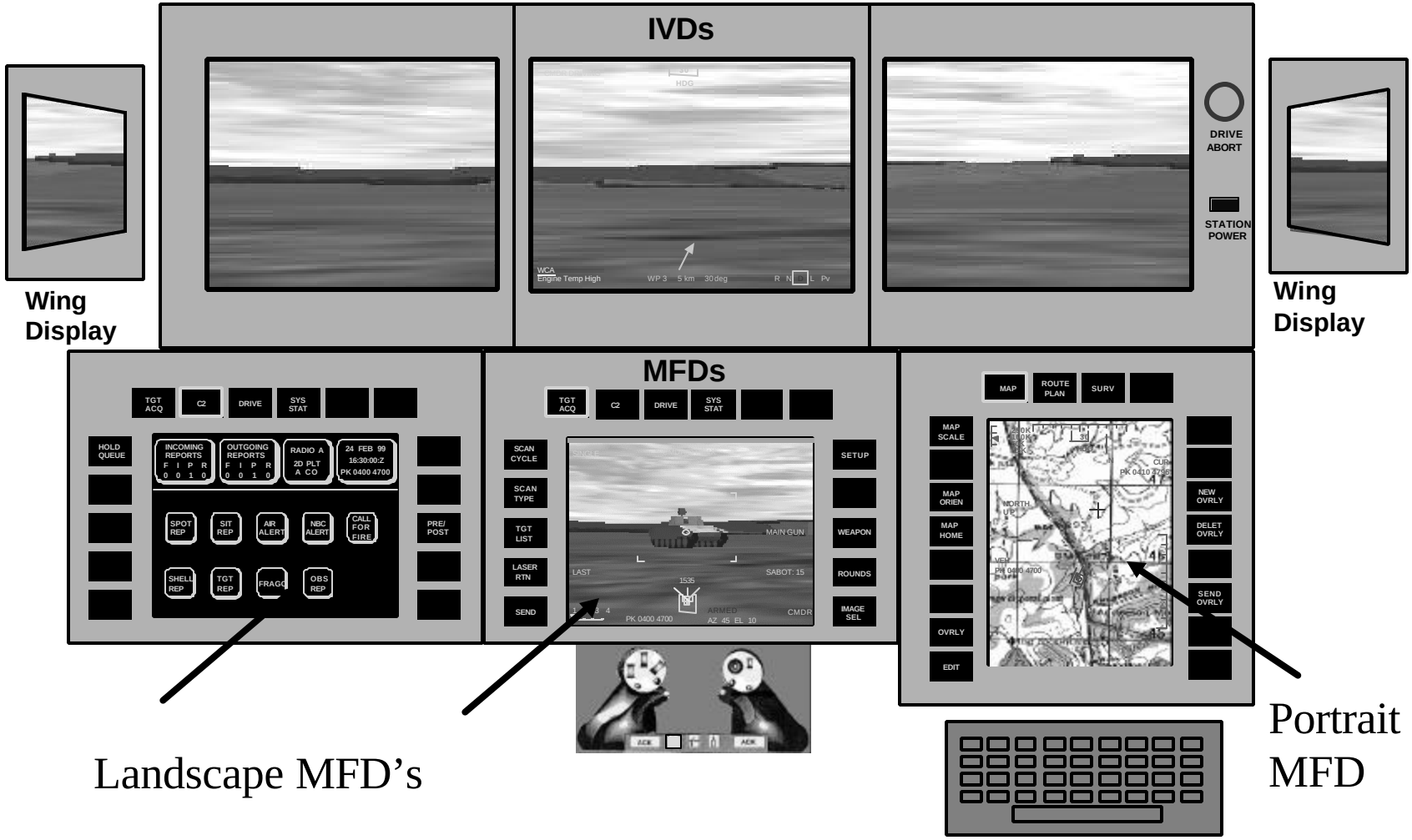

Display Technologies

Technology		Pro's	Con's
LCD	**Liquid Crystal Display (Many varieties)**	**Mature & low cost** **Good optical performance & contrast ratio** **Good MTBF**	**Requires heaters, Warm-up time** **Poorer off-axis viewing performance,** **Moderate video response, delicate polarisers**
EL	Electroluminescent (several varieties)	Mature, very rugged, available in custom size/formats, fast video response, high-resolution, Excellent MTBF.	Moderate brightness and poor colour availability, moderate voltage matrix drive electronics.
PDP	Plasma Display Panel (several varieties)	Mature, Rugged, Good colour gamut.	Poor resolution , marginal brightness, heavy, high power consumption. Limited sizes
FED	Field-Emission Display	"Flat CRT" Good color gamut, fast video response, good uniformity, low power for luminance, wide operating temperature, Low voltage matrix drive.	Emerging technology, poor lifetime, moderate brightness, high anode voltage (~8KV), has to overcome the economics of AMLCD to succeed.
LED	Light-Emitting Diode	Mature, simple, rugged, low-voltage, limited colour gamut, very long life.	Power-hungry, very poor Resolution.
OLED	Organic light emitting device (OLED)	Printable, flexible, very fast video response, low power consumption, wide colour gamut, potentially for very bright, high resolution, wide temperature, active matrix.	Unproven (unobtainable). Probably UV-degradable, moisture sensitive and short life span.
LEP	Light-Emitting Polymerized Plastic (very large molecule)	Printable, embedded drive circuits, compatible with low cost flexible substrate, low power, potential for good color, temperature & video response.	Unproven, UV-degradable, cannot obtain. Short life expectancy at this time.
DMD	Digital Mirror Display	Wide operating temperature range. Available.	Bulky (projection), optical cross talk, poor contrast (requires reflecting surface to project images).
VFD	Vacuum-Fluorescent Display	Mature, Simple, Cheap, and rugged.	Very low resolution, moderate luminance, high reflectivity, poor brightness, large IR signature.

Touch Panel Technologies

Touch-input Technology	Positive Attribute	Negative Characteristic
Infra red	No luminance loss.	IR emission.
	No additional reflection.	Low resolution.
	No environmental limitations.	
Surface Acoustic Wave	No luminance loss.	Low resolution.
	No additional reflection.	Materials incompatibility with environment and NBC.
		Packaging problem to accommodate sensors.
Near Field imaging	No luminance loss.	EMI emission at RF.
	No additional reflection.	Incompatible with a range of stylus materials.
Capacitive	Hard front surface.	Cannot be used with gloves.
	Minimal light loss.	EMI emission at RF.
Resistive	**High resolution.**	**Very poor reflection characteristics.**
	No RF emissions.	**Soft materials may be damaged.**
	Limited environmental problems	**Deformation properties change at low temperatures.**

Display Architecture

Standard Display Heads

LCD

Display Head
- Backlight
- Microcontroller
- Video I/F (LVDS)
- Adapted for each specific LCD

- 8.4” VGA
- 10.4” SVGA
- 13.0” SXGA

Common Hardware Modules

Video Module
- General Purpose Video I/F
  - LVDS
  - RGB Analog
  - Separate Hsync & Vsync
  - Composite TTL Sync
  - Sync on Green (RS-170)
  - NTSC/PAL/SECAM
- Frame rate/Scan converter/Scale
- Standard LVDS output

Power Supply Module
- Mil-Std-1275 compliant input
- Heater Power @ 150W

Keypad/Touchscreen

Video Multiplexor

Optional Modules

AC-DC Power

Single Board Computer
cPCI+PMC

Display Architecture - Exploded View

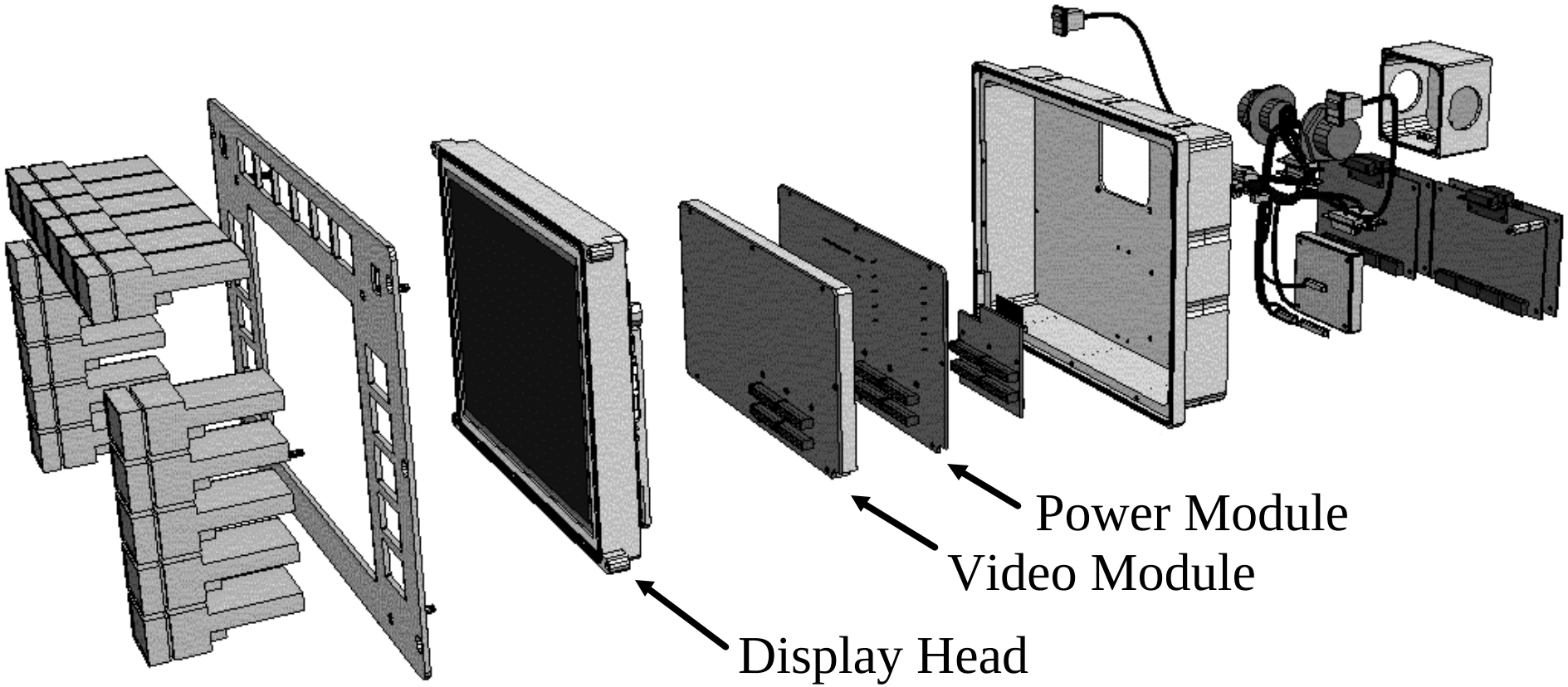

Display Head - Exploded View

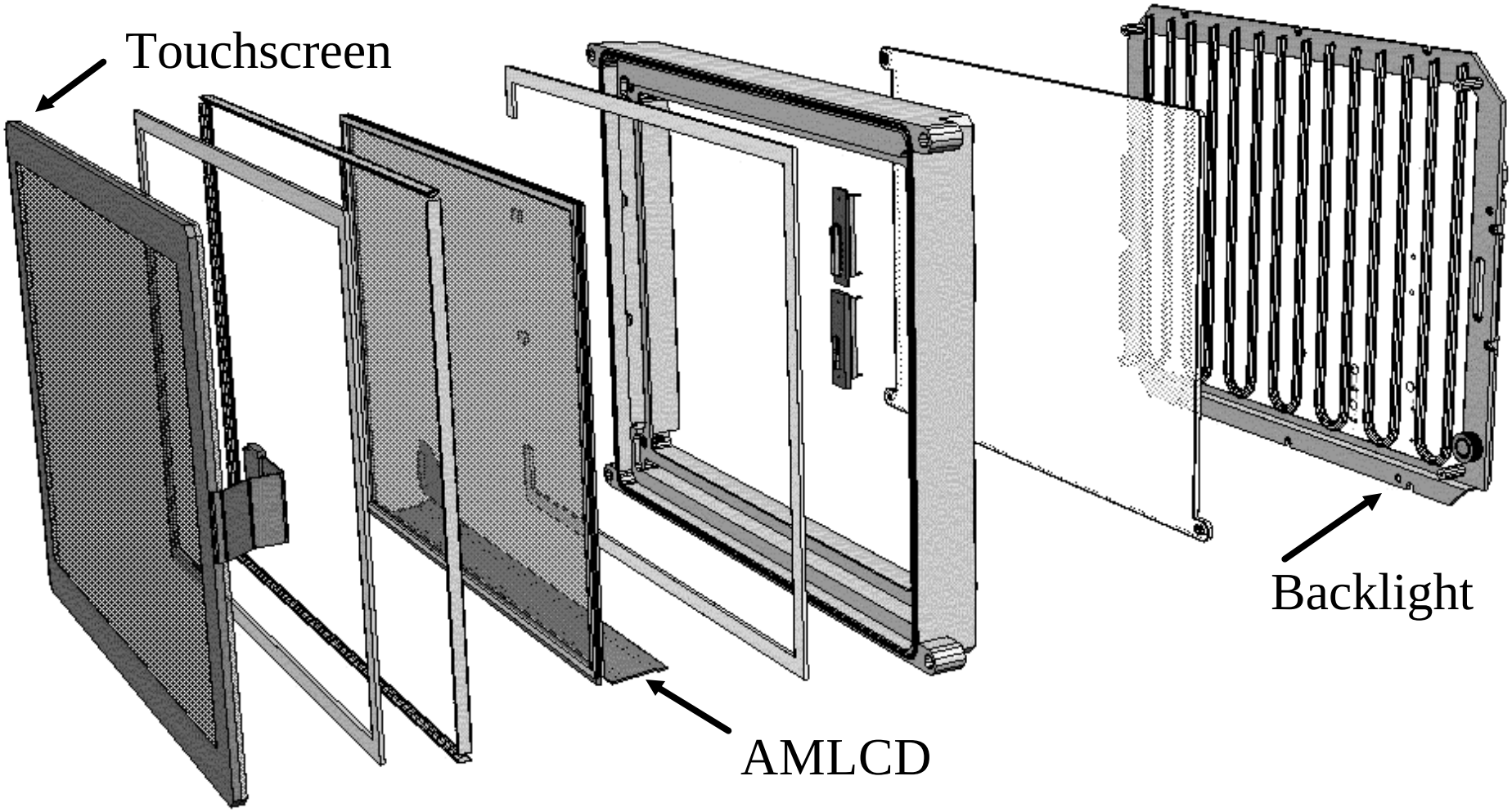

Common Display Characteristics

- **Optical Characteristics**
  - Brightness >250 fL (856 cd/m^2)
  - Brightness control <0.5 to >250 fL (1.7 to 856 cd/m^2)
  - Contrast Ratio >10:1 @1000 fc (10,764 lux)
- **Environmental Specifications**
  - Operating Temperature -40°C to +60°C
  - Storage Temperature -55°C to +85°C
  - Relative Humidity up to 100%
  - Shock MIL-STD-810E, Method 516.4, Procedure 1, Functional Shock
  - Vibration MIL-STD-810E, Method 514.4, Category 8, Ground Mobile
  - EMI/EMC MIL-STD-461D
  - Nuclear hardened design utilising a Nuclear Event Detector
- **MTBF >7500 hours at 60 °C MIL-STD-217(AIC)**

8.4” IVD Characteristics

Optical Characteristics

- Display Area 6.73” (170.9 mm) x 5.10”(129.6 mm)
- Matrix 640 x 480 (VGA)
- Pixel Size 0.267 mm x 0.27 mm (94dpi)
- 18 bit color (262144 colors)
- Viewing Angles:

  Horizontal >50°

  Vertical > 45° up, 35° down

Physical Characteristics

- Height 7.62” (193.0 mm)
- Width 8.82” (223.5 mm)
- Depth 2.79” (70.9 mm)
- Weight 6.0 lbs max (2.73 kg)

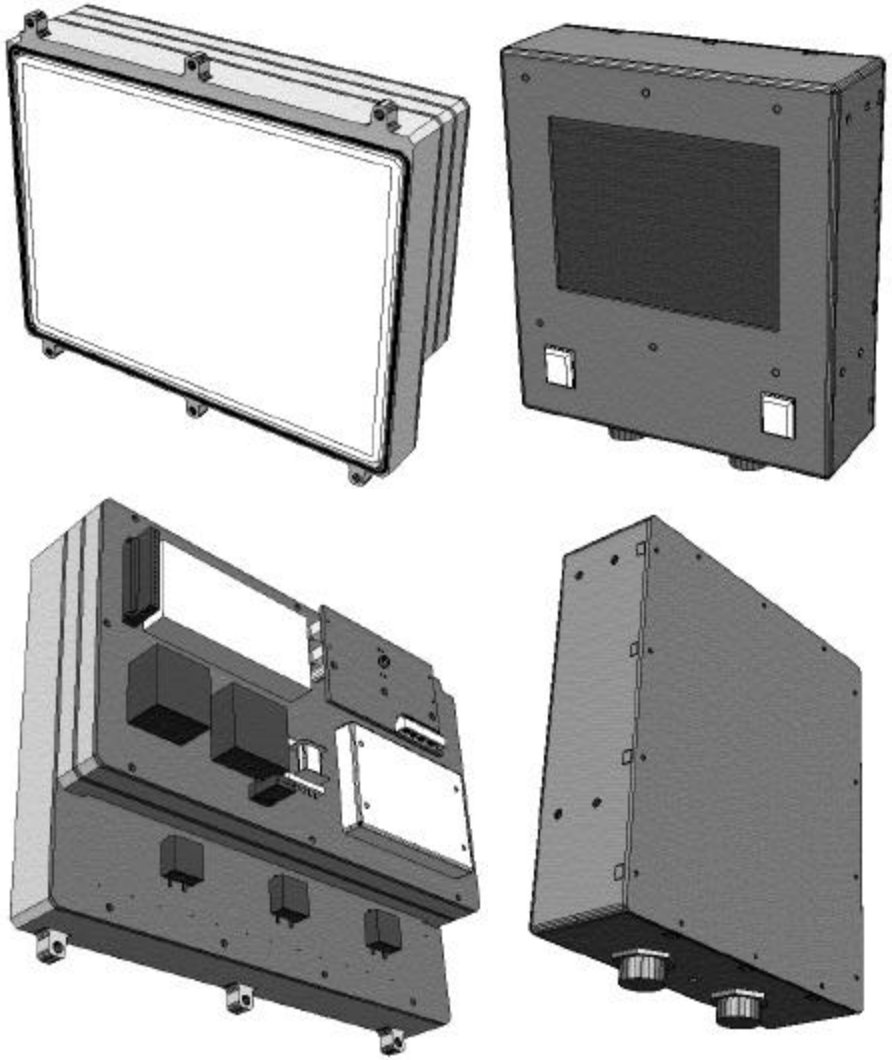

13.0” IVD Characteristics

Optical Characteristics

- Display Area 10.13” (257.3 mm) x 8.14”(206.8 mm)
- Matrix 1280 x 1024 (SXGA)
- Pixel Size 0.20 mm x 0.20 mm (127 dpi)
- 24 bit color (16.8 million colors)
- Viewing Angles:

  Horizontal >100°

  Vertical > 20° up, 25° down

Physical Characteristics

- Height 11.11” (282.2 mm)
- Width 13.83” (351.3 mm)
- Depth 3.00 (76.2 mm)
- Weight 15 lbs max (6.8 kg)

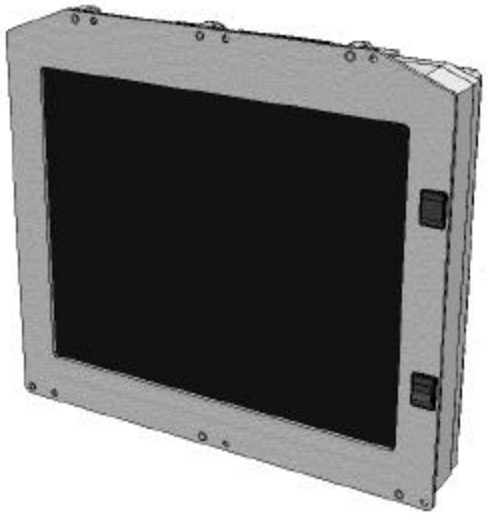

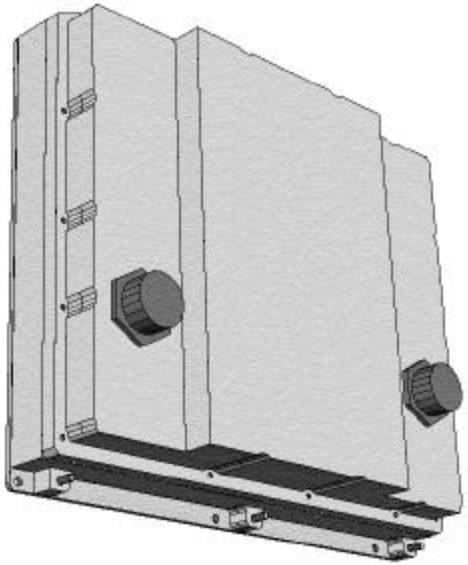

10.4” MFD (Landscape) Characteristics

Optical Characteristics

- Display Area 8.31” (211.2 mm) x 6.24”(158.4 mm)
- Matrix 800 x 600 (SVGA)
- Pixel Size 0.26 mm x 0.26 mm (98dpi)
- 18 bit colour (262144 colours)
- Viewing Angles:

  Horizontal >100°

  Vertical > 45° up, 20° down

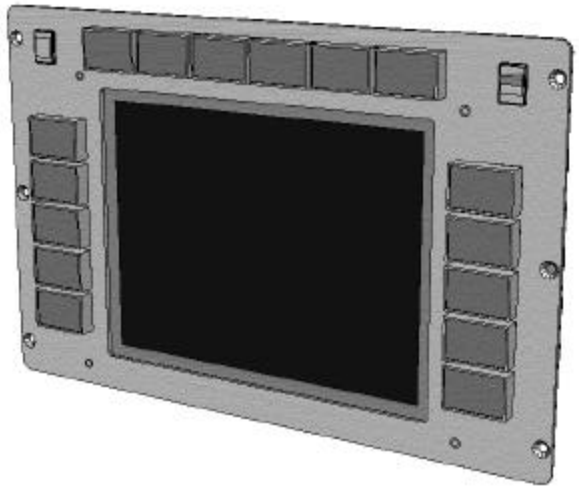

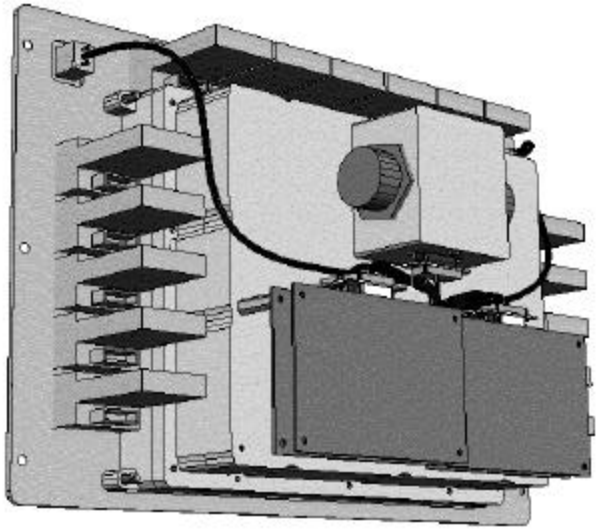

Physical Characteristics

- Height 9.00” (228.6 mm)
- Width 11.50” (292.1 mm)
- Depth 3.00” (76.2 mm)
- Weight 11 lbs max (5.0 kg)

10.4” MFD (Portrait) Characteristics

Optical Characteristics

- Display Area 6.24”(158.4 mm) x 8.31” (211.2 mm)
- Matrix 600 x 800 (SVGA)
- Pixel Size 0.26 mm x 0.26 mm (98dpi)
- 18 bit colour (262144 colours)
- Viewing Angles:

  Horizontal > 45° left, 20° right Vertical >100°

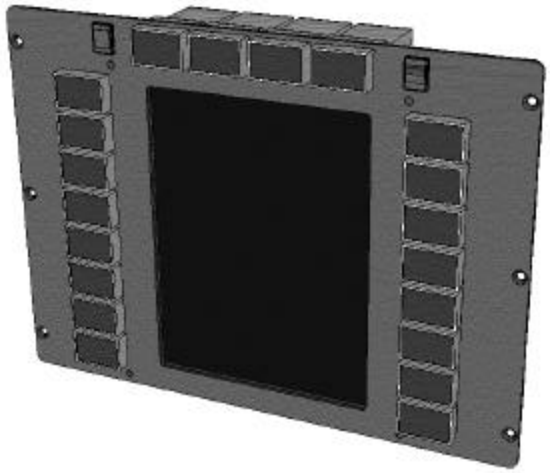

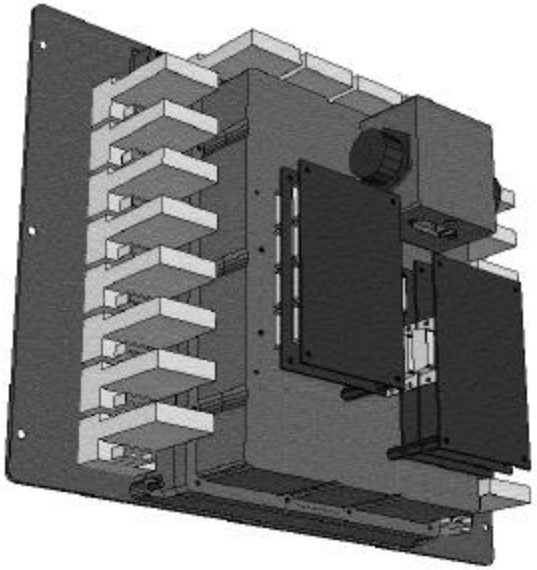

Greg Downs
phone (613) 596-7255
fax (613) 596-7697
e-mail: greg.downs@cdott.com

Conclusions
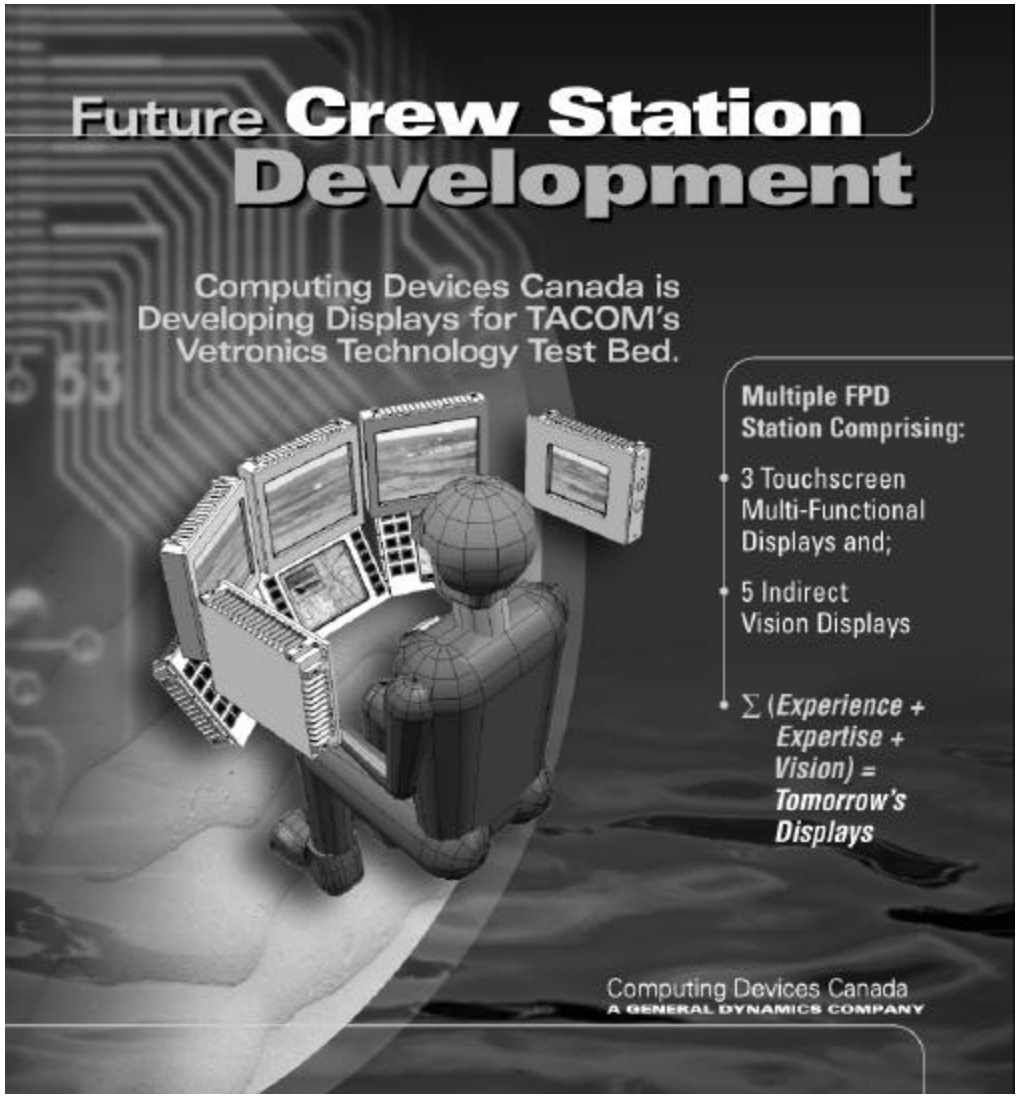
- AMLCD remains the technology of choice for AFV Applications (for now …)
- Modular architecture successfully met the TACOM requirement
  - Minimized development & lifecycle cost
  - Minimized obsolescence risk
  - Maximized flexibility