36th Annual
Gun & Ammunition Symposium

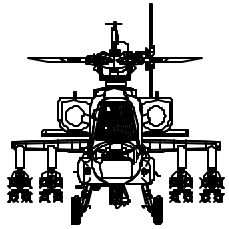

APACHE – 30mm Combo-PAK

Presented By

Gregory C. Hill

Director of Marketing

Western Design

April 11, 2001

Program Prime: Robertson Aviation, LLC

APACHE – 30mm Combo-PAK

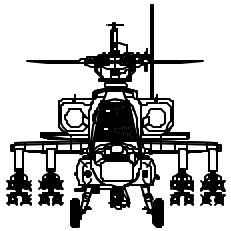

A Report:

‘ENHANCEMENT OF A LEGACY SYSTEM TO MEET EVOLVING COMBAT NEEDS’

Providing:

‘VERSATILITY FOR THE BENEFIT OF A SMALLER, MORE CAPABLE FORCE’

APACHE – 30mm Combo-PAK

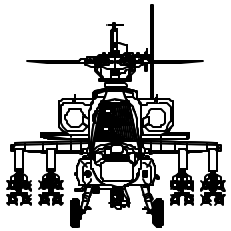

AH-64A 30mm 12-PAK Magazine

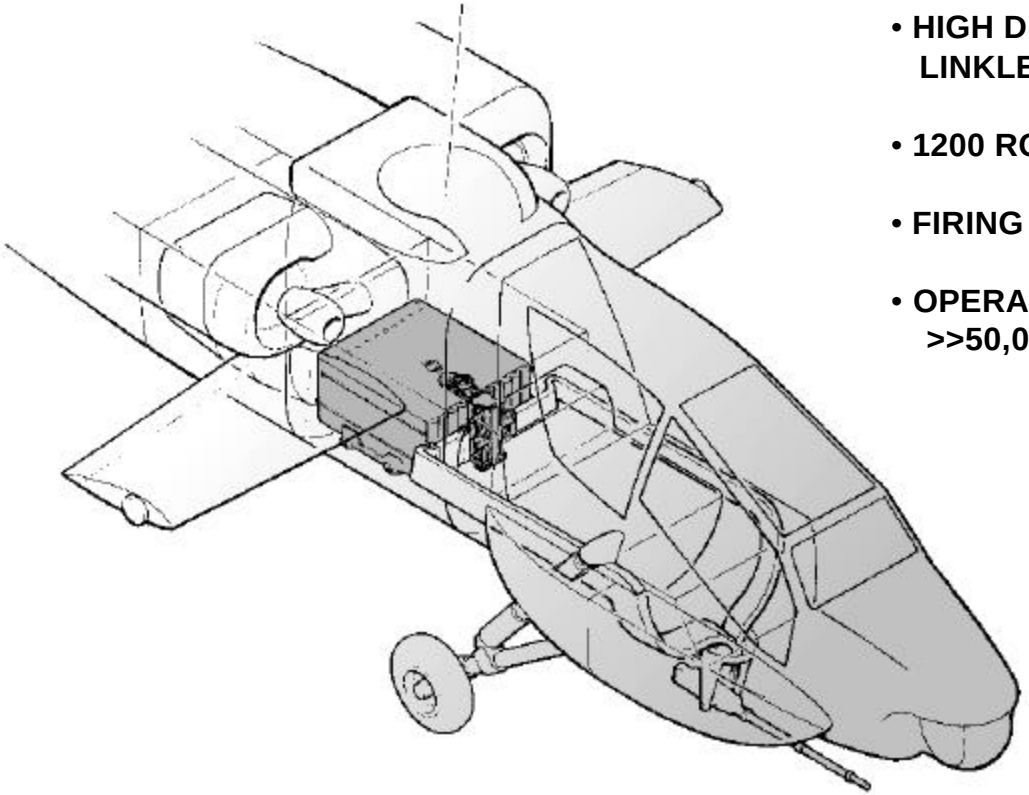

- HIGH DENSITY, TWO BAY, LINEAR LINKLESS MAGAZINE
- 1200 ROUND CAPACITY
- FIRING RATE 600 SPM
- OPERATIONAL RELIABILITY >>50,000 MRBF

APACHE – 30mm Combo-PAK

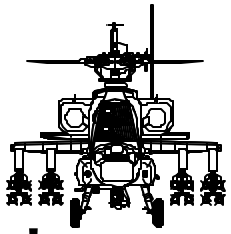

AH-64D 30mm 12-PAK "Sideloader'

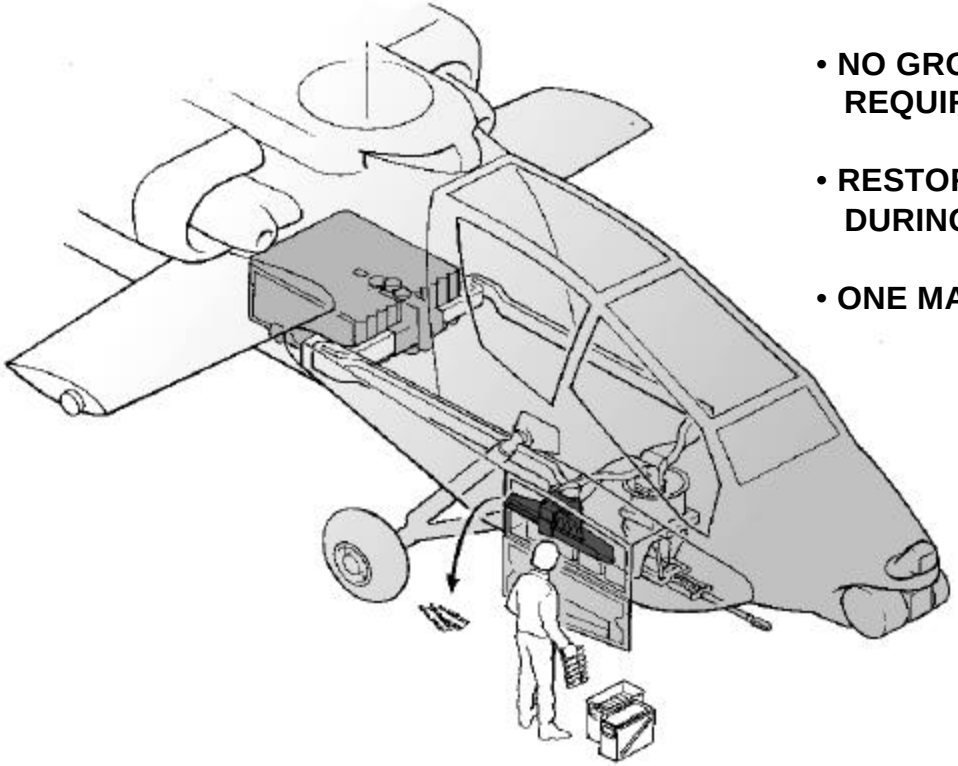

- 1164 ROUND CAPACITY
- NO GROUND SUPPORT EQUIPMENT REQUIRED
- RESTORES AMMUNITION TO STRIPS DURING DOWNLOAD
- ONE MAN OPERATION @ 100 RNDS/MIN

APACHE – 30mm Combo-PAK

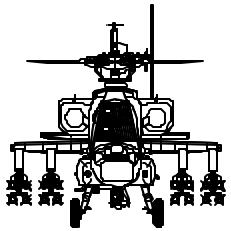

THE EVOLVING REQUIREMENT

- **Operational need identified:**
  "Greater range required for Apache"
  (A lesson learned from Task Force Hawk in Kosovo)

- **Translated to a requirement:**
  Extended Range Fuel System (ERFS) became a part of the Apache Operational Capabilities Improvements Priority List

- **Internal Fuel Solutions Developed:**
  Reduction of ammunition load (full complement rarely used) to provide additional space for internal fuel (2 options)

APACHE – 30mm Combo-PAK

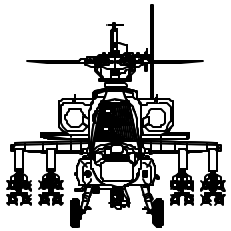

COMBINATION:
FUEL AND AMMO FOR VERSATILITY

APACHE – 30mm Combo-PAK

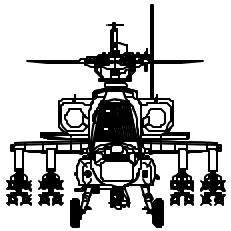

APACHE HISTORY: AMMUNITION/FUEL

Six-PAK	**Original design, 600 round capacity**
12-PAK	**Original fielded system, 1200 rounds**
230 Gallons Fuel	**External, Pylon-mounted tank**

TIME PASSED: Concepts developed for reduced weight and/or additional internal fuel

130 Gallon Tank	**Developed to eliminate use of external tanks**
Combo-PAK	**Compromise on fuel/ammo/weight to provide longer legs and a meaningful amount of ammunition**

APACHE – 30mm Combo-PAK

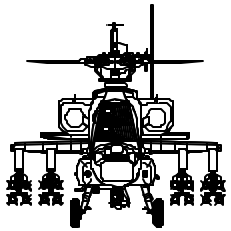

AH-64A 30mm Combo-PAK

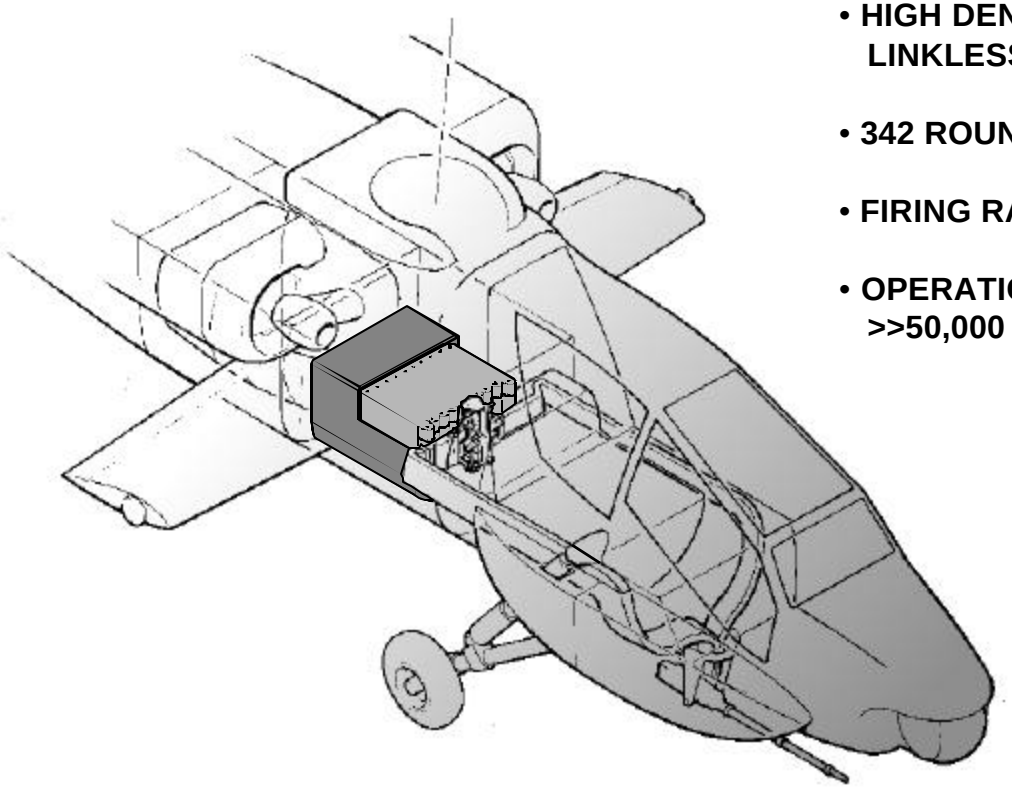

- HIGH DENSITY, SINGLE BAY, LINEAR LINKLESS MAGAZINE
- 342 ROUND CAPACITY
- FIRING RATE 600 SPM
- OPERATIONAL RELIABILITY >>50,000 MRBF

0103-3.CDR

APACHE – 30mm Combo-PAK

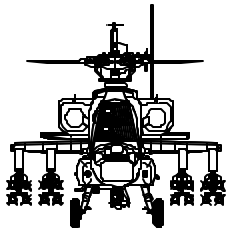

AH-64D 30mm Combo-PAK "Sideloader'

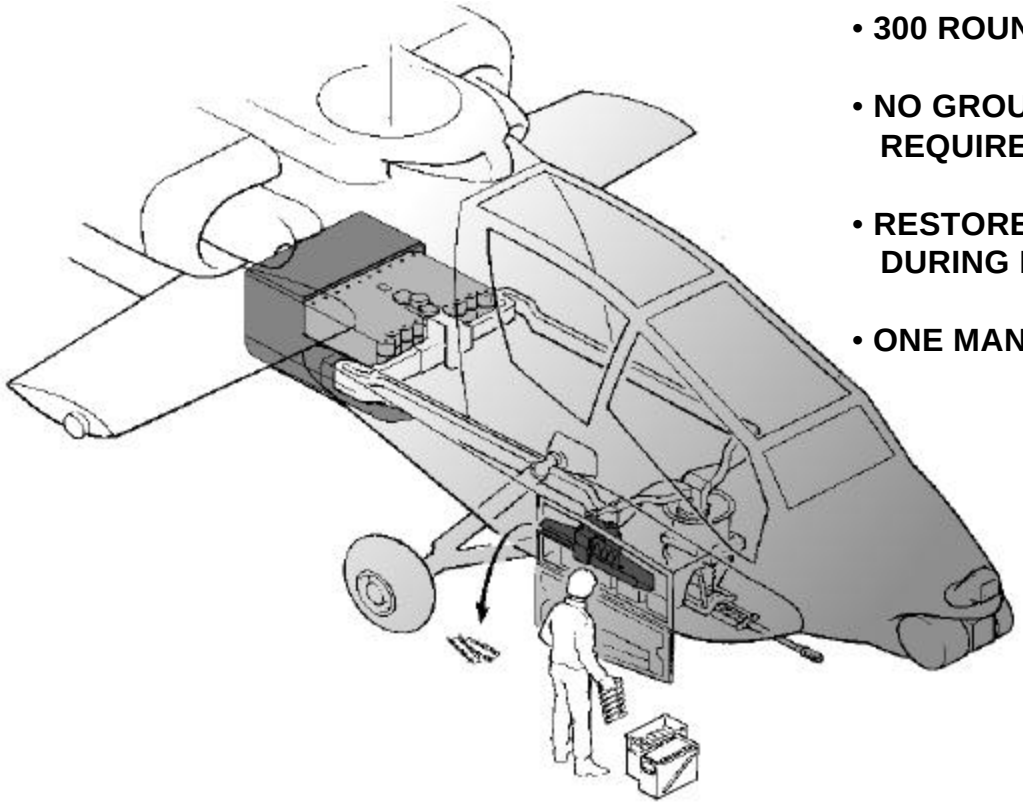

- 300 ROUND CAPACITY
- NO GROUND SUPPORT EQUIPMENT REQUIRED
- RESTORES AMMUNITION TO STRIPS DURING DOWNLOAD
- ONE MAN OPERATION @ 100 RNDS/MIN

0103-5.CDR

APACHE – 30mm Combo-PAK

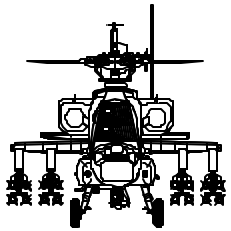

Combo-PAK: A SOLUTION FOR VERSATILITY

Reduced Size Magazine:

Capacity:	**-246 30mm rounds**
Construction:	**-Light weight honeycomb Aluminum**
	-Linear Linkless Chain Ladder

New Fuel Cell:

Capacity:	**-100 gallons**
Construction:	**-Honeycomb/Fiberglass Outer Container**
	-Crashworthy, Self-Sealing Bladder

APACHE – 30mm Combo-PAK

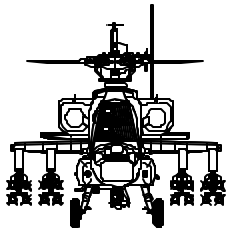

MISSION COMMANDER <u>NOW HAS OPTIONS</u>

1) Existing 30mm 12-PAK Magazine

2) Robertson GUARDIAN Apache Auxiliary Fuel System

- **AH-64A Capacity: 130 gallons / 96 rounds**
- **AH-64D Capacity: 130 gallons / 54 rounds**

3) Robertson / Western Design Fuel / Ammunition Combo-PAK

- **AH-64A Capacity: 100 gallons / 342 rounds**
- **AH-64D Capacity: 100 gallons / 300 rounds**

Interchangeable in less than 30 minutes

APACHE – 30mm Combo-PAK

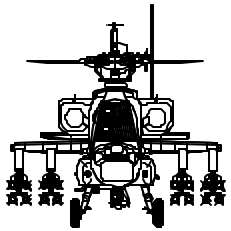

STATISTICAL INFORMATION

Equipment	Empty Wt.	Wt. of Fuel and/or Ammo	Full Wt.
12-PAK Magazine	182 lbs	855 lbs (alum.)	**1037 lbs (alum.)**
		1156 lbs (brass)	1338 lbs (brass)
130 Gallon Tank	215 lbs	871 lbs	**1086 lbs**
100 Gallon Tank	205 lbs	671 lbs	876 lbs
246 Rd. Magazine	75 lbs	190 lbs (alum.)	265 lbs (alum.)
		256 lbs (brass)	331 lbs (brass)
100 Gal + 246 Rd. Combo-PAK	280 lbs	861 lbs (alum,)	**1141 lbs (alum.)**
		927 lbs (brass)	1207 lbs (brass)

APACHE – 30mm Combo-PAK

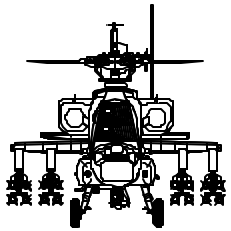

Combo-PAK BENEFITS

Increased Effectiveness for the Mission Commander through operational flexibility

APACHE Force Effectiveness enhanced:

- **Increased range (40 minutes flight time) without using external tanks**
- **'Off-axis Drag' condition removed**
- **Pylon hard-point retained for maximum ordnance load**

APACHE – 30mm Combo-PAK

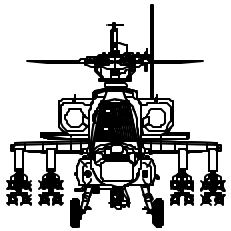

WHY THESE COMPONENTS?

Western Design Magazine:

12-PAK Design Technology proven highly reliable over many years of low maintenance field use. A low risk system.

Robertson Aviation Fuel Cell:

Demonstrated long history with Auxiliary Tanks having crash worthy safety features that include self-sealing breakaway valves, Frangible Fasteners and Puncture/Tear Resistant Bladders

APACHE – 30mm Combo-PAK

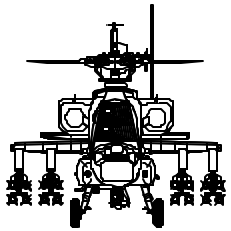

Concluding Thoughts:

Field Commander: Options for Needed Mission **FLEXIBILITY**

Industry: **Innovative Thinking** on Legacy Systems leads to effective Product Improvements

Combo-PAK: Available for field use in ‘02