Nammo
NORDIC AMMUNITION COMPANY

Expanding the Traditional Effectiveness Window

Jan Hasslid Program Manager

CONTENTS

- **OBJECTIVE**
- **EFFECTIVENES IN SELECTED PROGRAMMES**
- **EXPANDING WINDOW**
- **OPTIMIZATION APPROACH**
  - ***Interior Ballistics***
  - ***Intermediate Ballistics***
  - ***External Ballistics***
  - ***Terminal Ballistics***
- **RESULTS**
- **CURRENT & FUTURE ACTIVITIES**

TARGETS:

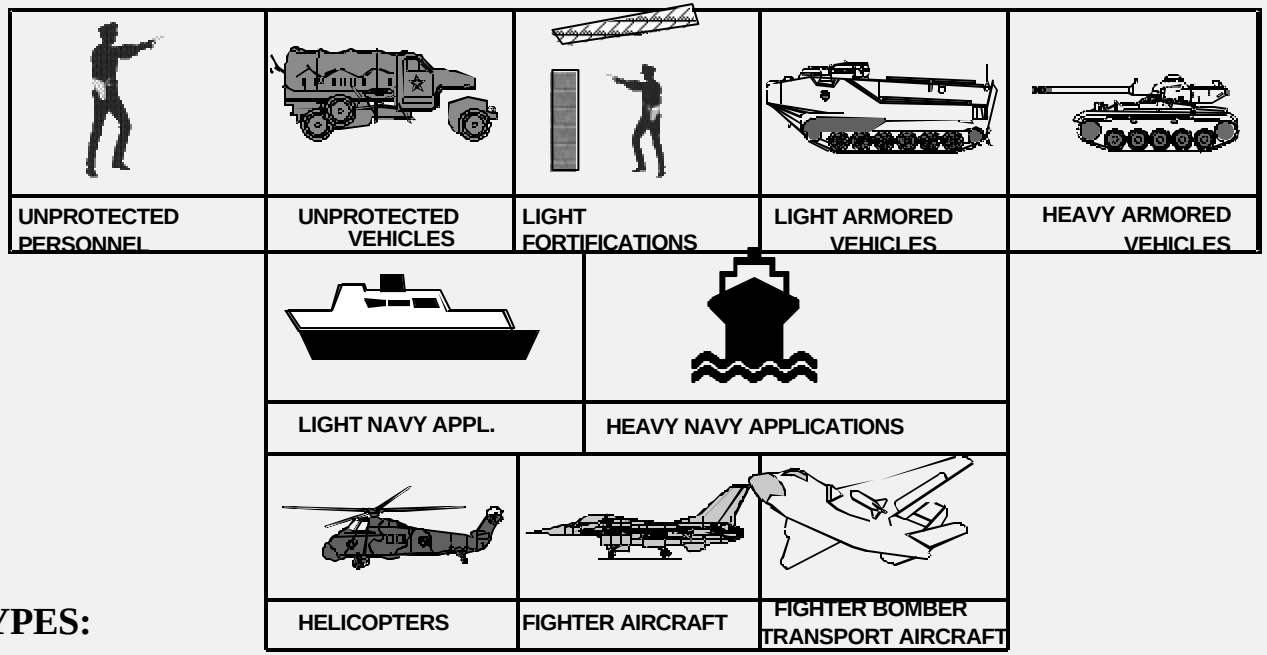

SHELL TYPES:

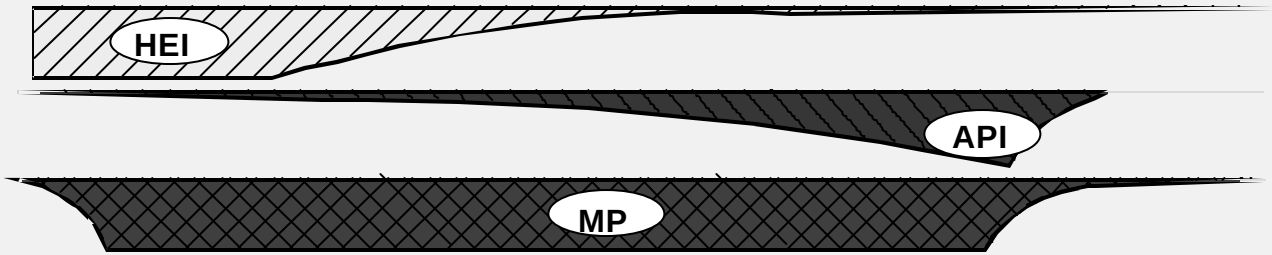

30x173 Family of Ammunition qualified with the Bushmaster II mod 0 & mod 1

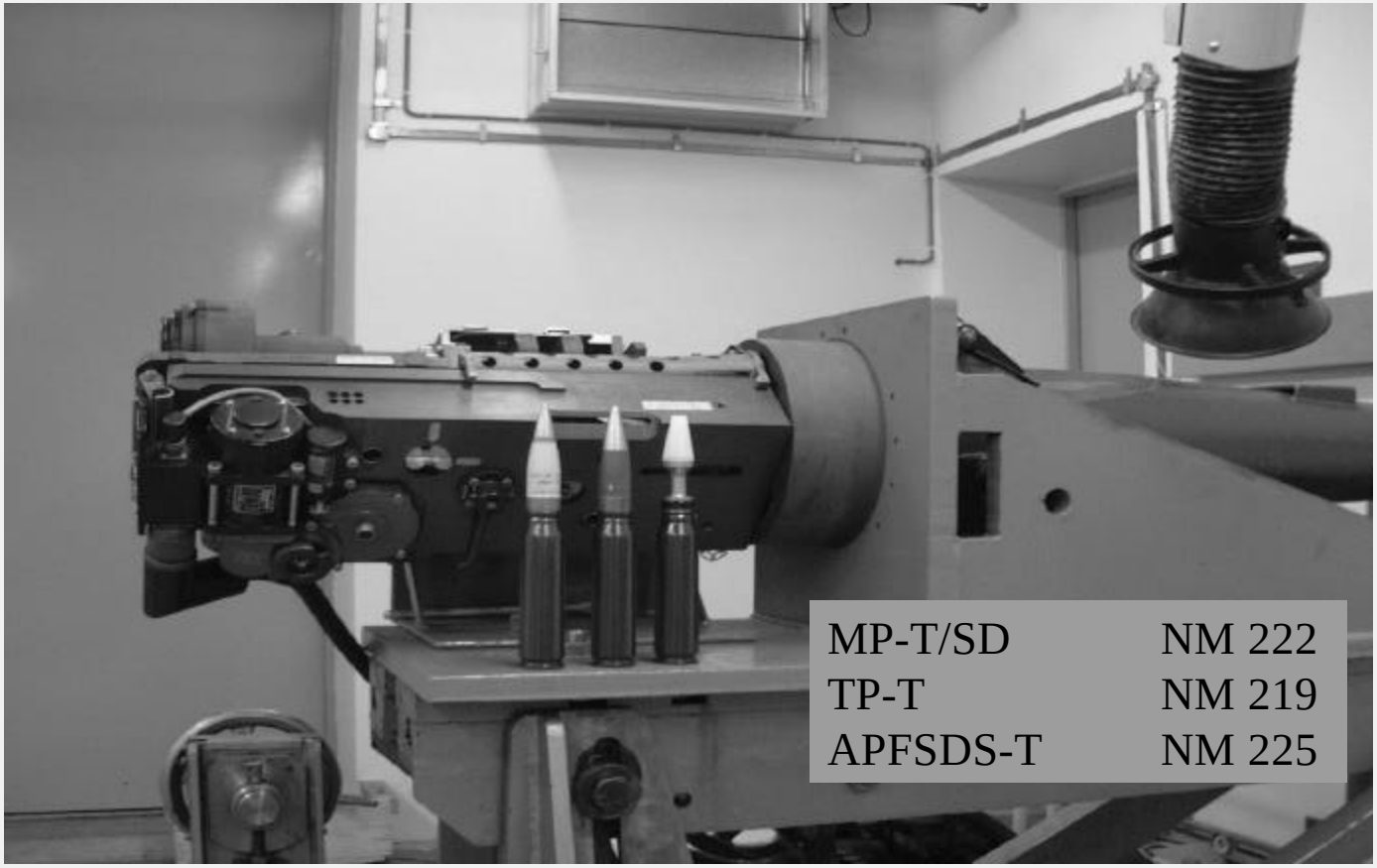

AAAV TGT Matrix

- ***Light*** ***Medium*** ***Heavy***
- ***Infantry*** ***BTR/Urban*** ***BMP***
- ***HEI *---------- ------ -------- ****
- ***MPLD *----- ----- ----------****
- ***APFSDS *---------- ------****
- ***ABM *---------- ---------- -?????****

- ***Expanding the Effectiveness Window***
- ***MRP-T *…. …… . …… …****
- ***ABMP-T*----- -------- ------- -- --------****

Pushmaster II- Traditional Long Rod Rock Penetration

Bushmaster II-Optimized Long Rod Granite Rock Penetration with an APFSDS-T

Nammo
NORDIC AMMUNITION COMPANY

30x173 APFSDS-T
Organization of activities 2001

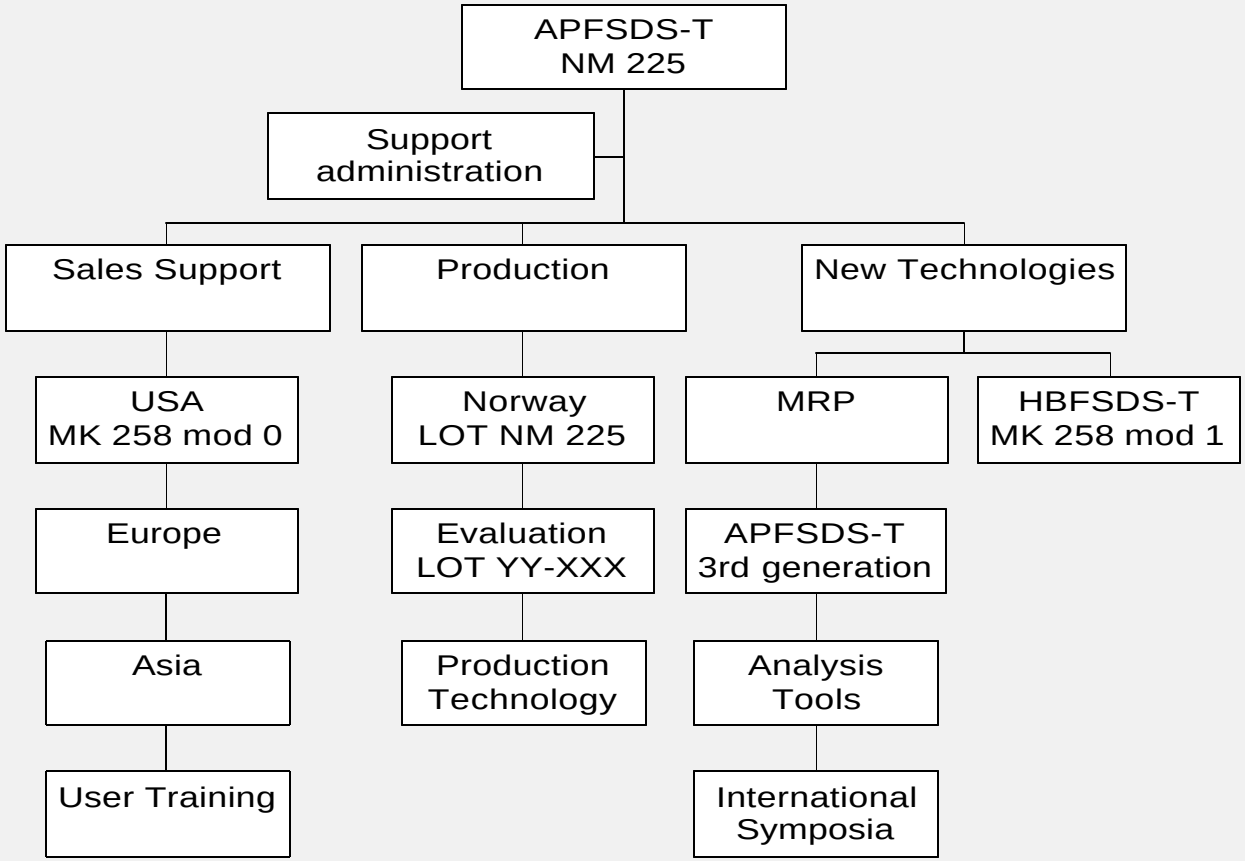

Supplier Selection Criteria for the User

Modern Ammunition	*IM Performance*	*NATO standardized Ammunition family*	*Fits the engagement scenario for MOUT*
New Technologies Integration	*EI Propellant*	*Hydrocode analysis for maximum performance*	*CFD-analysis for superior exterior dynamics*
A Heritage and commitment for the future in medium caliber	*The Multipurpose Concept*	*In service ammunition with Air Force, Navy & Army*	*Integrated Process & Production Development*
Competetive in cost for performance	*30mm stored kills outperform 35 & 40mm*	*Low Lifecycle Cost*	*All current target scenarios defeated*

Optimization

Approach!

Dispersion due to Initial Yaw-Condition

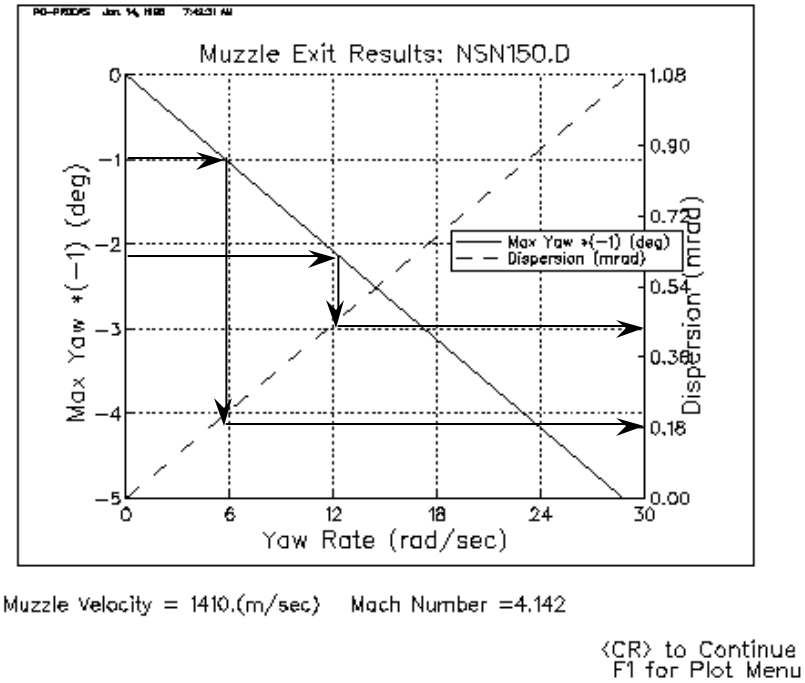

Muzzle Velocity = 1410.(m/sec) Mach Number =4.142

<CR> to Continue
F1 for Plot Menu

Objective #1
Bushmaster II integration (0’-8,5’)

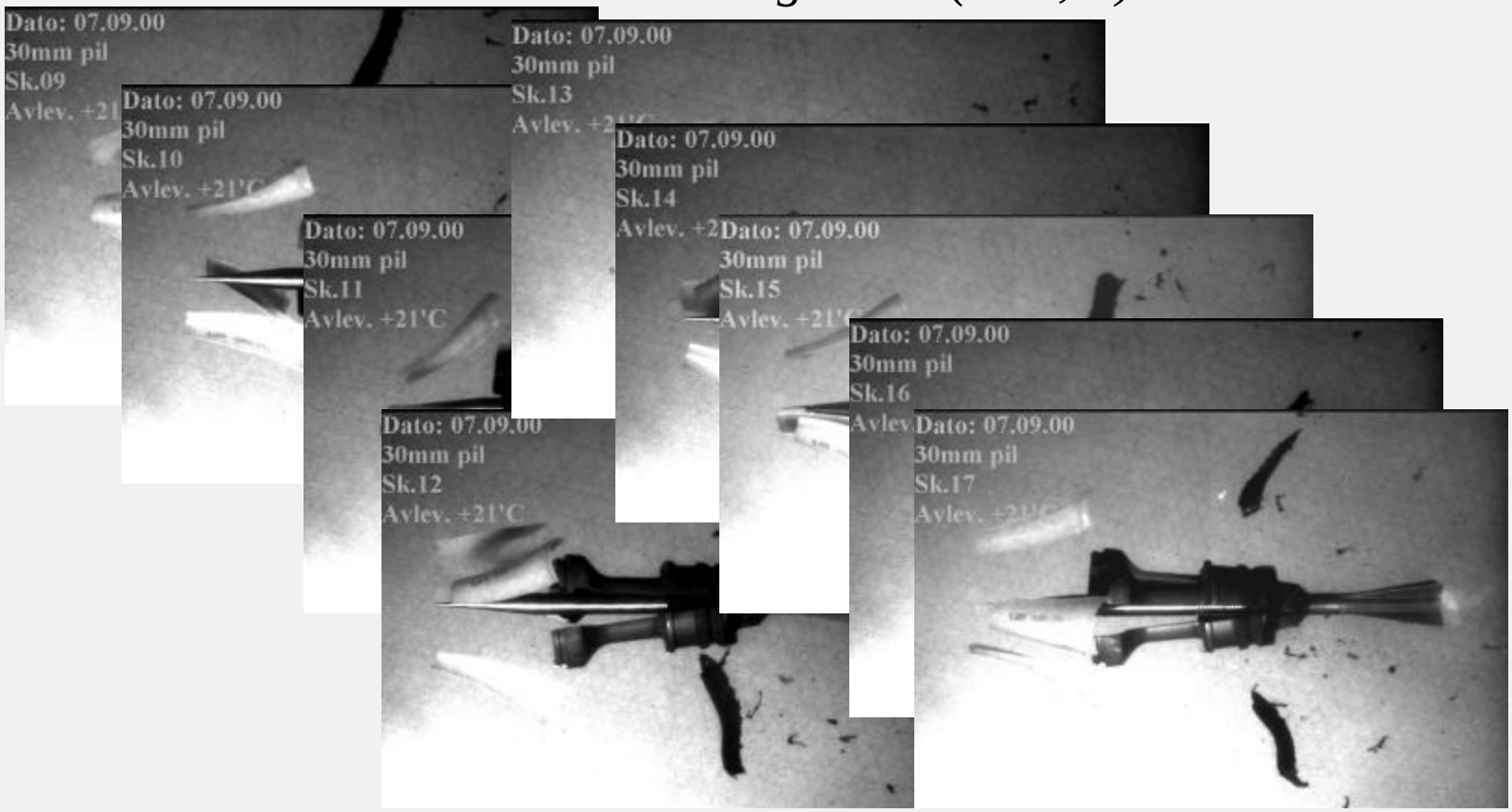

Barrel Interface Study

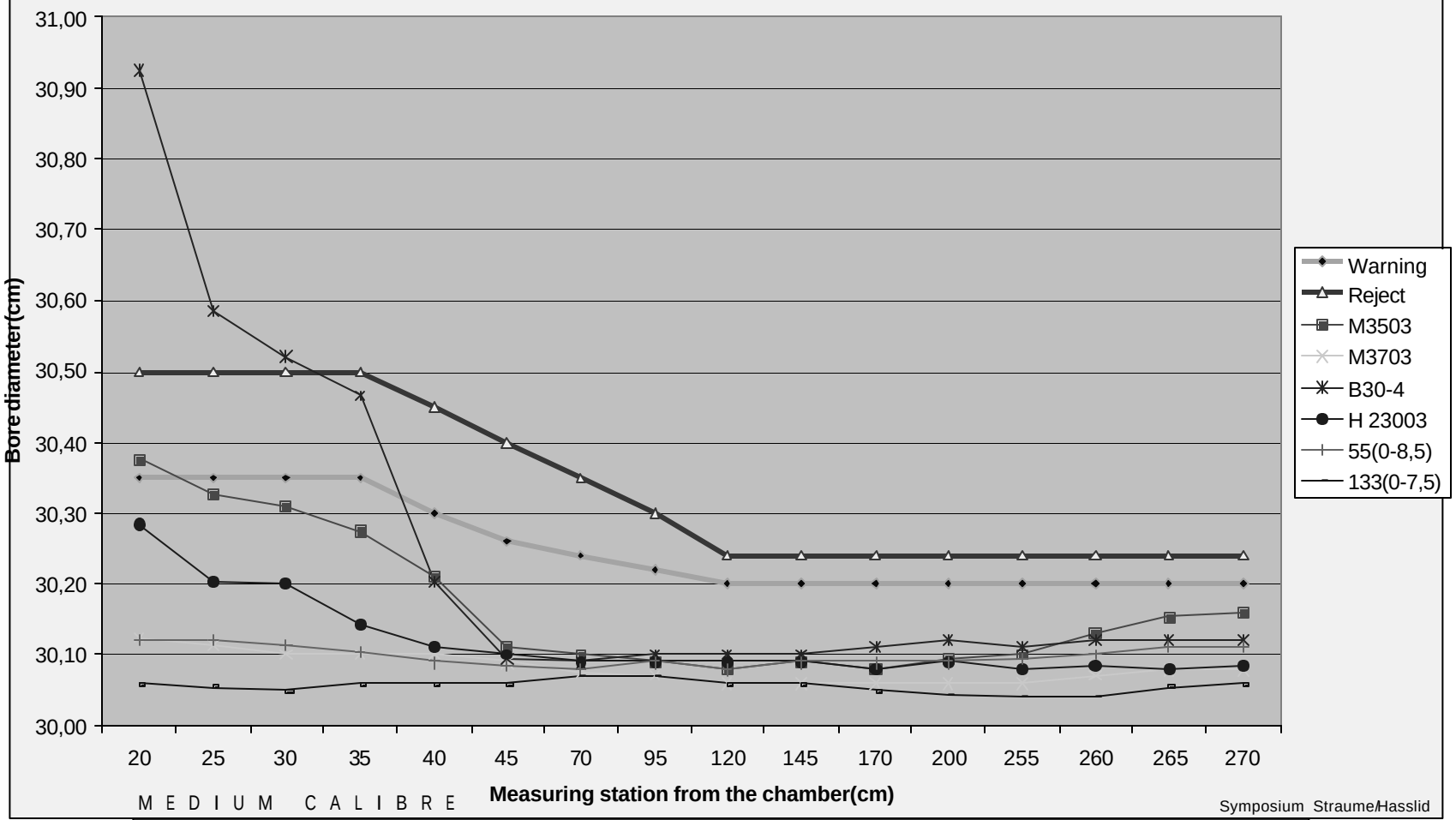

DISPERSION RESULTS

Barrel	Dispersion (1SD)	
	Sx	Sy
	(mils)	(mils)
Mauser Mann	0,15	0,15
Bush II Mann	0,20	0,20
Bush II Auto s.s.	0,35	0,35
Bush II Auto burst	0,45	0,45

Expanding the Traditional Effectiveness Window

APFSDS-T==➔ MRP

Multi Role Penetrator

Nammo
NORDIC AMMUNITION COMPANY

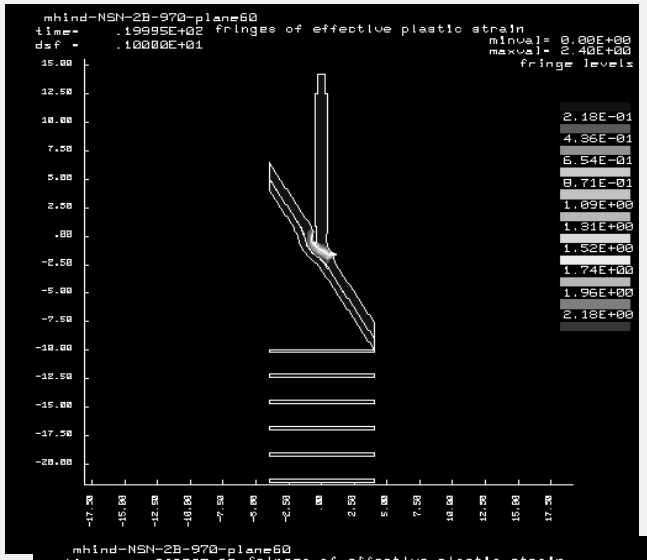

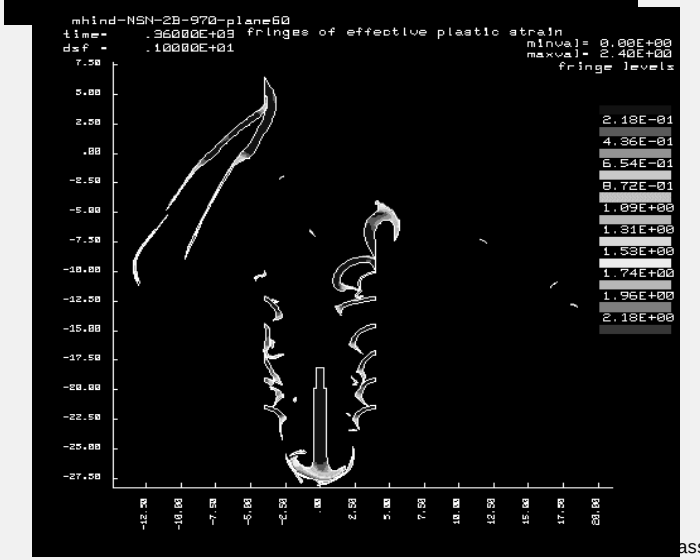

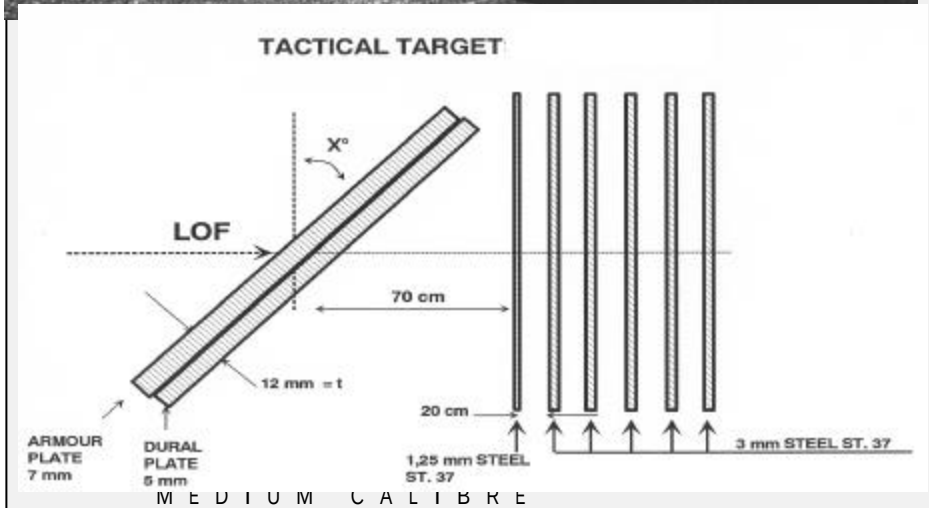

Urban/Bunker Targets (600x600x1200)

Projectile Break-Up

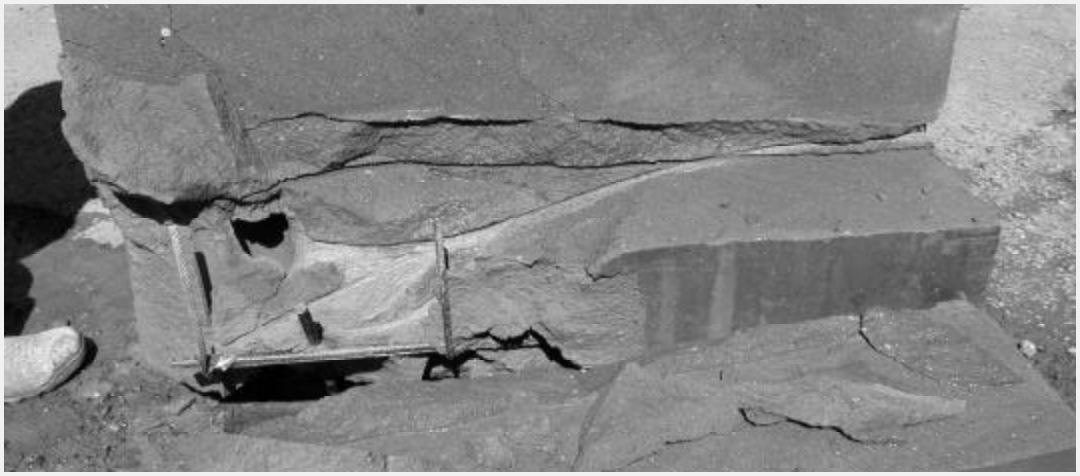

Target 1 Entrance

Full Penetration (+15mm RHA

Target 2 Entrance

30x173 APFSDS-T NM 225

- ***5 rds burst from the Bushmaster II mod 1 (chromed 0-7,5 deg)***
- ***Reinforced Concrete block 1500x1500x300(5ftx5ftx1ft)***
- ***Strength C55; Double matrix 12,7mm re-bar; Grain<8mm***
- ***10,6mm ARMOX MIL-A-12560 with hardness HB 367***
- ***3mm Steel witness plate of size 2000x2000 approx.***

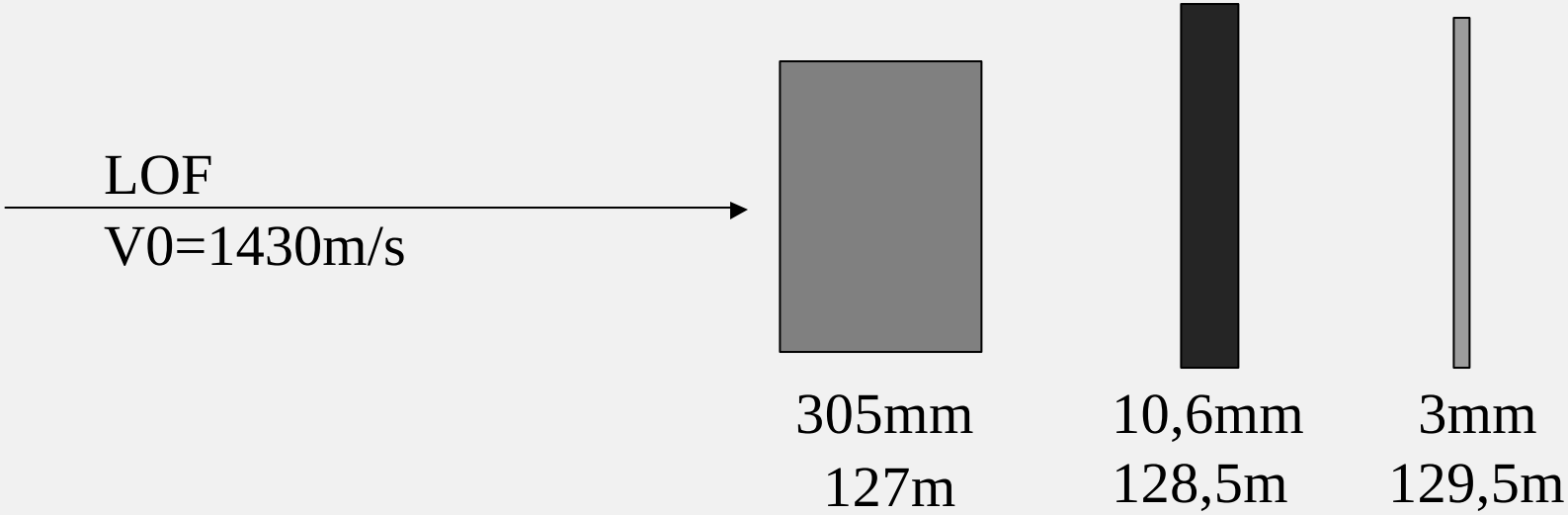

Urban Combo Target Set-Up

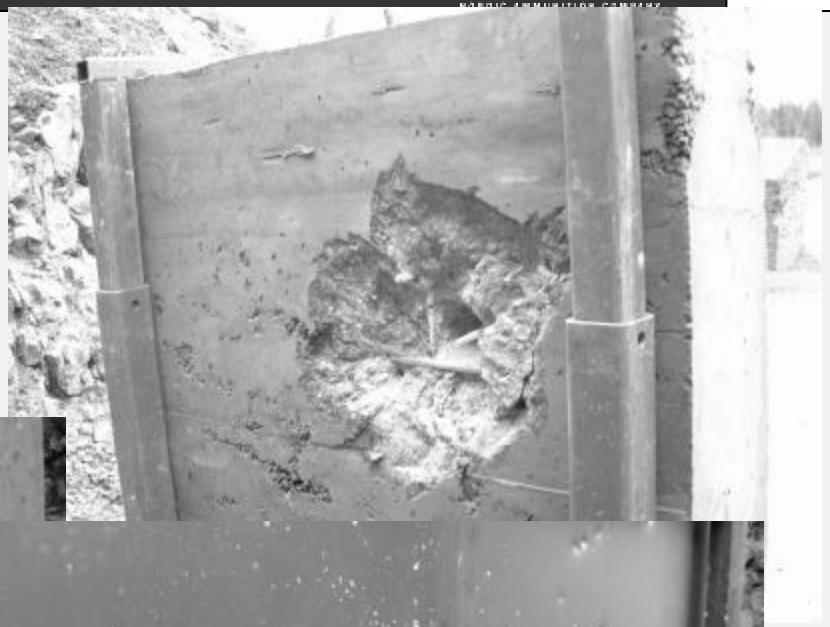

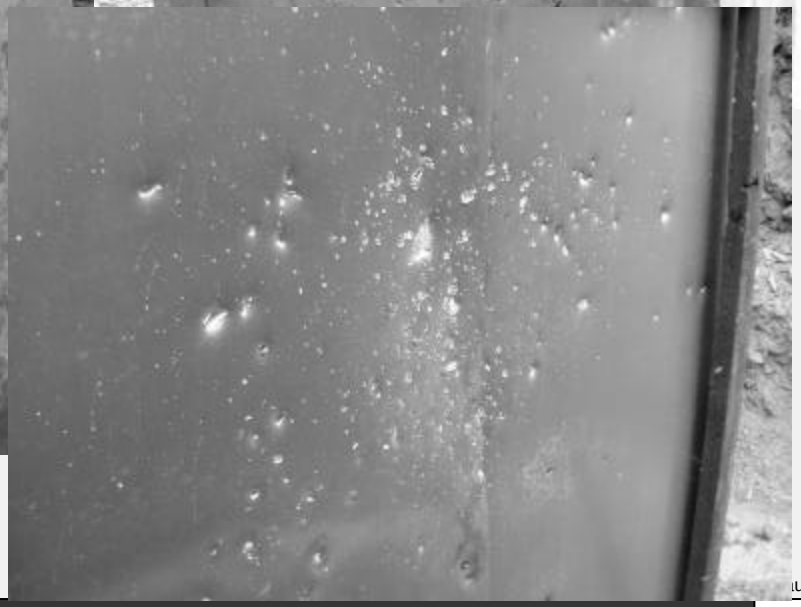

MEDIUM CALIBRE

ume/Hasslid

Expanding the Traditional Effectiveness Window

MP-T/SD==➔ ABMP-T

Air Burst Multi Purpose

<u>3 Modus</u>

Programmable time based fuze	***-Detonation***
Point Detonation	***-Detonation***
Multi Purpose	***-Deflagration***

ABMP-T Ammunition Concept

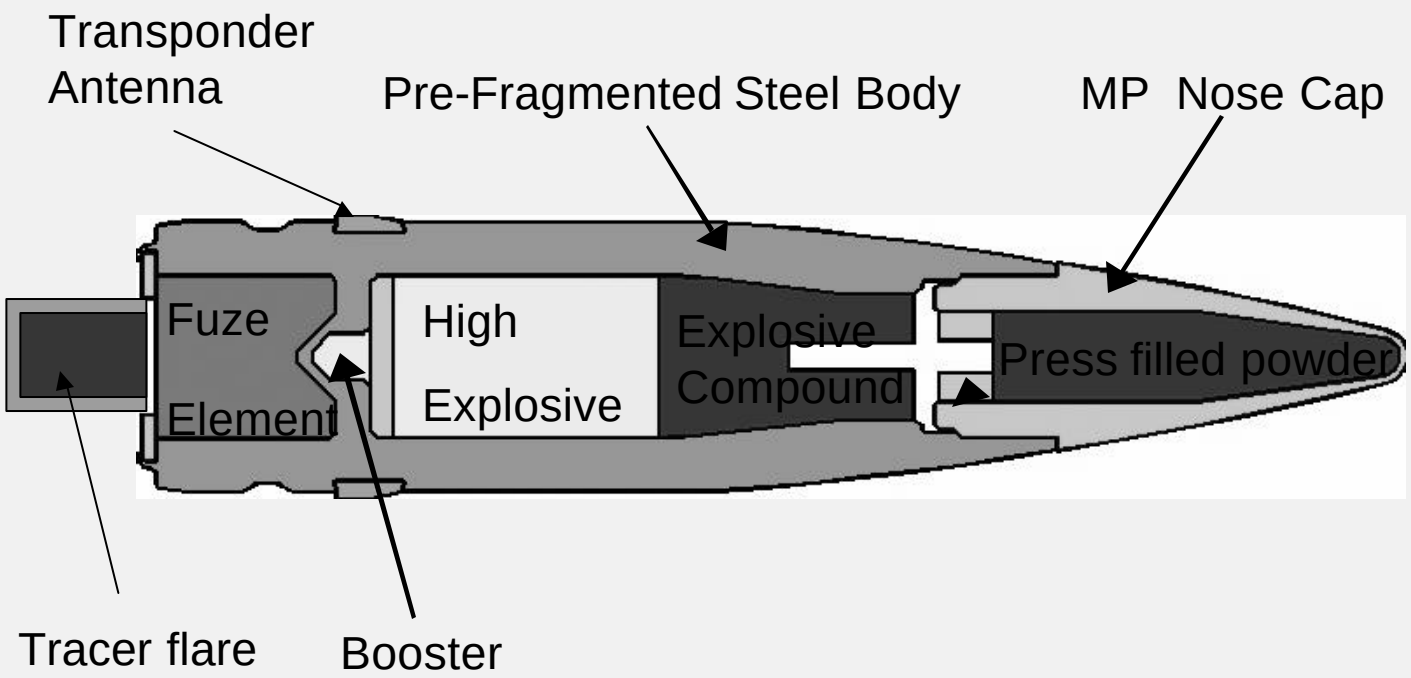

SUMMARY

- **Qualified ammunition defeats current targets as defined in performance spec.**
- **Effectiveness window expanded:**
  - **Urban Targets**
  - **Submerged Targets**
  - **Targets defeated at longer stand-off**
- **> Reduced System Cost and Product LCC**

Mr. Short Rod & Mr. Long Rod at New Frontiers

The Parrot Rifle, Fredericksburg,VA