XM1002 TP-T Development of a New Training Round

Tony Farina

Firing Tables & AeroBallistics Team

TACOM-ARDEC

Rollie Dohrn

Alliant Ammunition Systems Company

XM1002 - Topics

- XM1002 Description
- XM1002 ARDEC Development
- XM1002 Key Requirements
- XM1002 Development Plan
- XM1002 Wind Tunnel Results
- XM1002 Upcoming Events

XM1002 - Training for M830A1

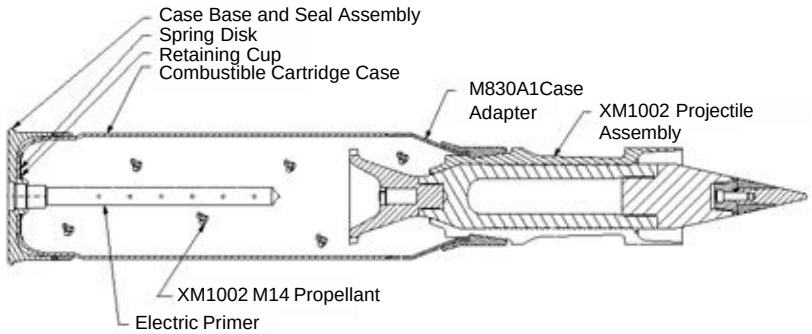

XM1002 Cartridge Layout

26_T105235.ppt

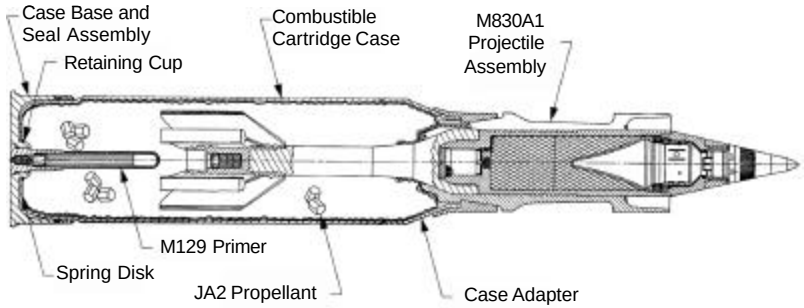

29_T105235.ppt

M830A1 Cartridge Layout

- **XM1002 External Geometry Identical to M830A1**
- **Weight & CG Location Similar to M830A1**
- **Conical Flare to Stabilize and Drag Down**
- **M14 Propellant to Reduce Cost**
- **Consistent Flight Characteristics (Low TID)**

XM1002 – Program Objectives

- **Meet All ORD Requirements**
- **Type Classify (TC), Which Meets All ORD Requirements**
- **Material Release (MR)**
- **Incorporate Into Production 2QFY05**

XM1002 - Background

- **Approved ORD Exists**
- **Royalty Funded Work ($100K) has resulted in a baseline design for the start of a Development Program**
- **Contract Awarded to Alliant Techsystems to Develop & Produce XM1002**

XM1002 – Acquisition Strategy

- **Awarded Fixed Price Single Source EMD I Contract to Alliant Techsystems**
- **Ceiling Price for EMD II, LRIP and PYI Established**
- **Award Second Source After TCLRIP**
- **Award Multi-Year Contract in FY06 Dual Source**
- **Will Replace Current M831A1 With Production Levels of 80K-100K/Yr.**

XM1002 – M831A1 Comparison

XM1002 vs. M831A1 CARTRIDGE

XM1002 EXITING GUN TUBE

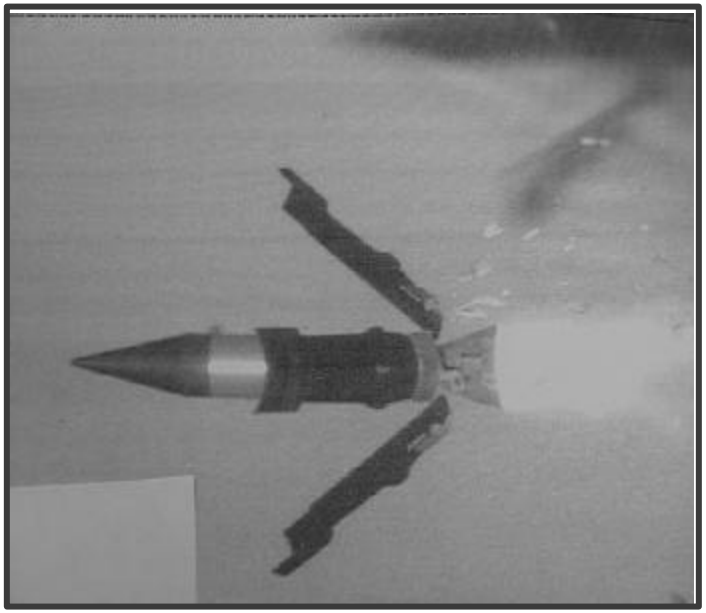

XM1002 – M830A1 Trainer ORD

Key Requirements (JUL 98)

- **Max Range 8 KM (10° Gun Elevation)**
- **Dispersion ~ M830A1**
- **Visual Appearance ~ M830A1**
- **Ballistics Similar to 3000m (Requires FC Solution)**
- **Checking / Setting Capability of Dummy Air / Ground Switch**
- **Tracer Visible To 3000m**
- **Tracer Different Color than M865**
- **Weight(+0/-6 Pounds) Compared to M830A1**
- **Center Of Gravity (+/-3 Inches) Compared to M830A1**

XM1002 – Program Challenges

- **Target Impact Dispersion (TID)**
- **Unit Production Cost (UPC)**

XM1002 – Major Milestones

•Award EMD Phase I	Sep. 2000
•Award EMD Phase II	Apr. 2002
•TC-LRIP	Jun. 2003
•TC-STD	Jan. 2005
•Award 2nd Source LRIP	Jul. 2004
•Material Release	Dec. 2005
•Award FY06 Multi Year 60/40	Dec. 2005

Key Requirements – TID

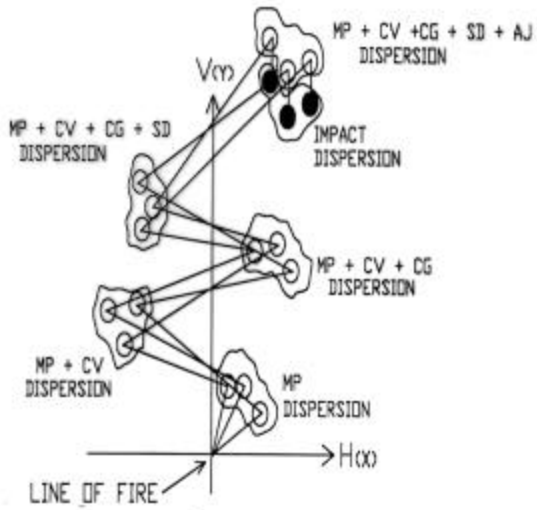

$$DISPERSION = MP + CV + CG + SD + AJ + GD + CORRELATIONS$$

$$\sigma^2 = \sigma_{mp}^2 + \sigma_{cv}^2 + \sigma_{cg}^2 + \sigma_{sd}^2 + \sigma_{aj}^2 + \sigma_{gd}^2 + 2\sigma_{cgaj}$$

Jump Variability

- **Gravity Drop**
- **Aerodynamic Jump**
- **Sabot Discard**
- **Center of Gravity**
- **Crossing Velocity**
- **Muzzle Pointing Angle**

TID = Variability in Jump

Key Requirements – TID

XM1002 Approach to Reduce TID

Gravity Drop:

- **Reduce Propellant Variability**
- **Reduce Time of Flight**

Aerodynamic Jump:

- **Increase Stability (Cp Back, CG Forward)**
- **Reduce Jump Factor, Decrease Transverse MOI**
- **Reduce Asymmetries**

Sabot Discard:

- **Move Pivot Near Cp, Reduce Sabot Weight Ratio**

Center of Gravity/Crossing Velocity/Muzzle Pointing Angle

- **ARL In-Bore Analysis and Transonic Range Testing**

XM1002 Enhancements

Three Tail Cone Concepts all have "short" 5mm boom.

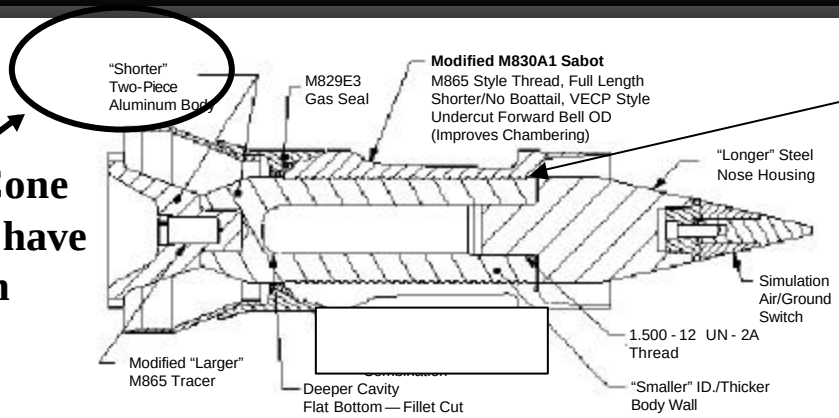

Threaded Grooves Reduces Cost

042_T105235.ppt

Aerodynamic:

- **Heavy Nose – CG Moves Forward Improving Stability**
- **Thicker Body & Increased Grooves – Reduces Plastic Deformations**
- **Stabilizer – Optimize Stability & Jump Factor**

Sabot Discard:

- **Sabot Pivot Near Cp – Reduces Impulse From Sabot Discard**
- **Truncated Sabot – Reduced Sabot Weight Ration Reduces Impulse**
- **M829E3 Obturator – Proven Obturation**

Design – Structural Integrity

XM1002 Baseline

XM1002 Proposal Baseline

012_T105235.ppt

XM1002 Enhanced

XM1002 – Development Plan

EMD 1 Development Plan

Iteration #1:

Wind Tunnel	**Sub-Scale Spark Range**
TID	**Propellant Charge Establishment**

Iteration #2:

TID	**Transportation Handling & Drops**

Iteration #3:

TID	**SOD/Max Range**

TACOM-ARDEC Supersonic Wind Tunnel

9”x9” Supersonic Wind Tunnel

Range: Mach 2.4, 3.0, 3.5

Static Temperatures: -200° to -300°F

Altitude: 25,000 to 60,000 feet (based on static pressure)

Capacity: 2.25” Dia. Model and 12” Long

Angles-of-Attack: -8° to +15°

Operation: **16,000 Cu. Ft. Dry Air Stored at 120 ps**

TACOM-ARDEC Supersonic Wind Tunnel

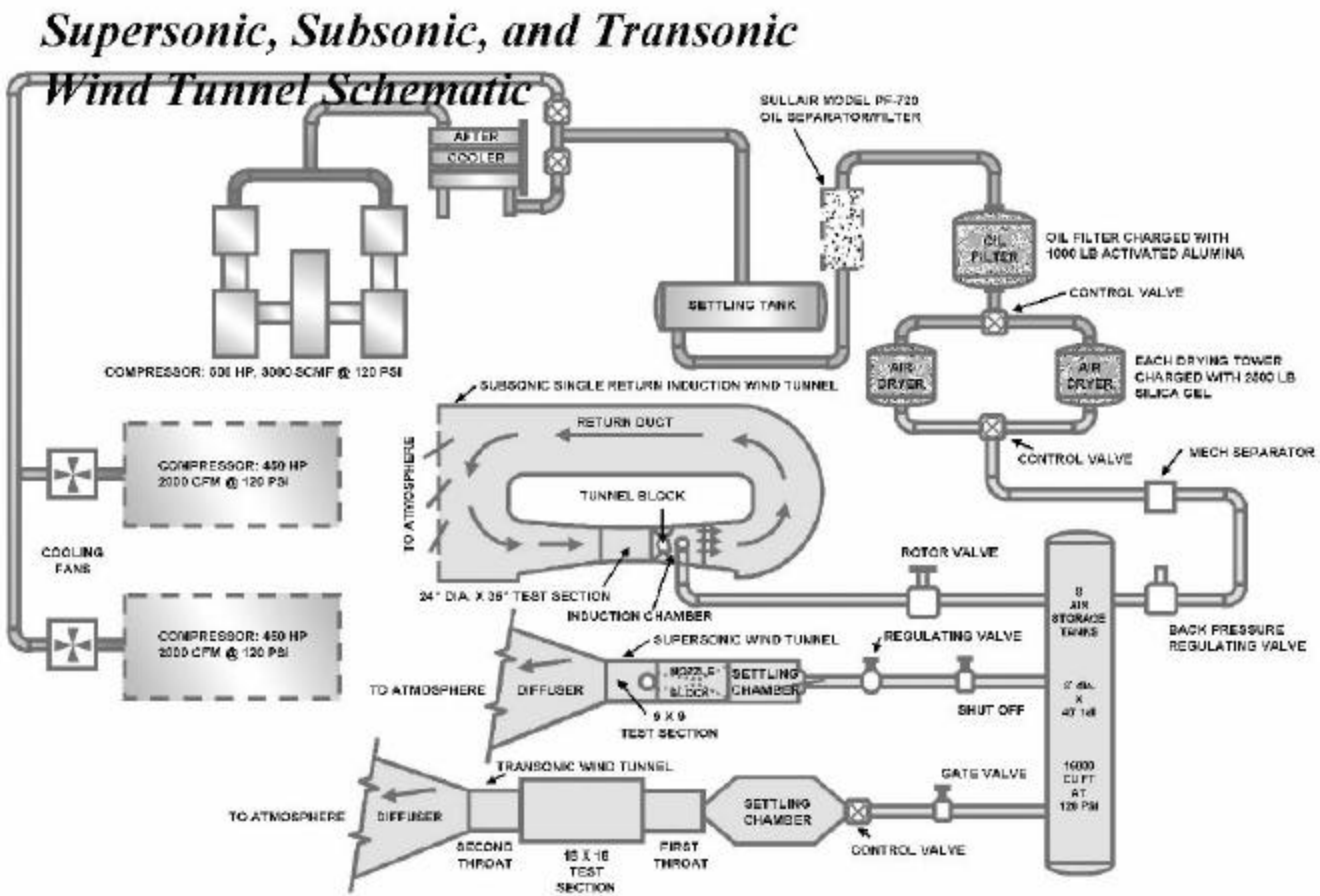

TACOM-ARDEC Supersonic Wind Tunnel

9-inch by 9-inch Supersonic Tunnel

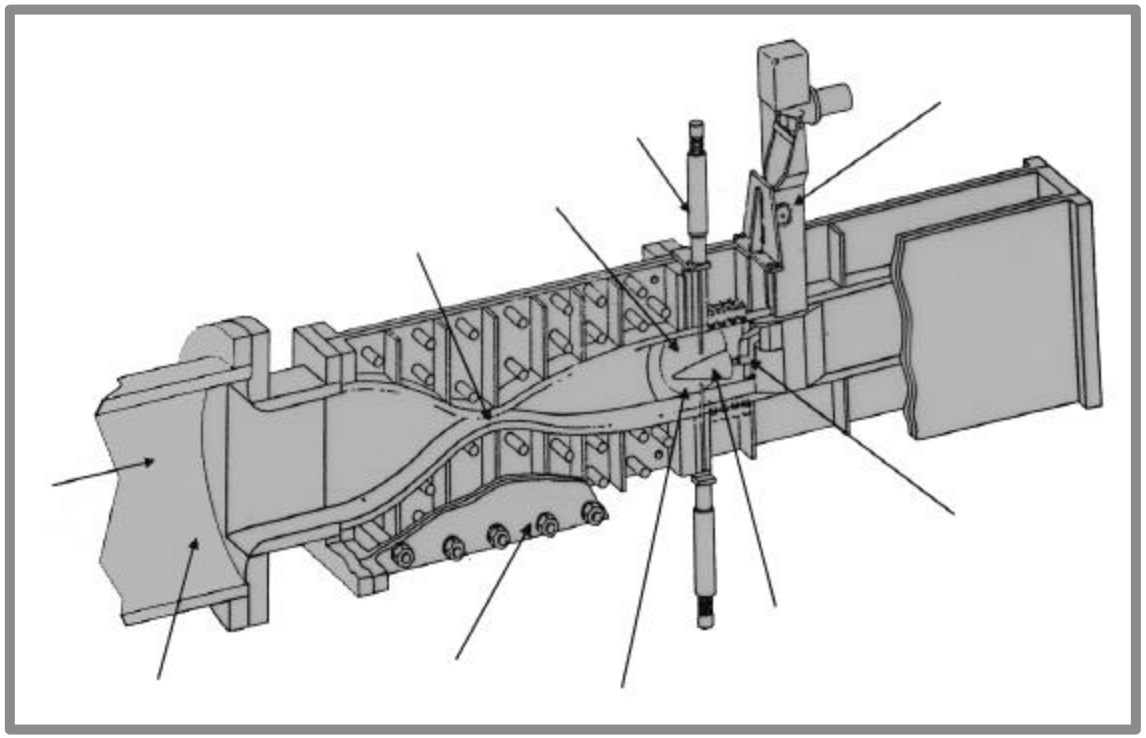

XM1002 Wind Tunnel Test

Config. #	Description
111	M830A1
222	Proposal Baseline
2314	Fin 14, T. Farina 93 Test
232	Baseline w/Threaded Body
233	Proposal Enhanced Design
234	Conical Flare (118mm Base)
235	Reduce Cone Angle Extra Length
236	Reduced Flare Diameter
237	Enhanced Stabilizer w/Boom
238	Strakes
349	Reduced Body Diameter

XM1002 Wind Tunnel Test - Results

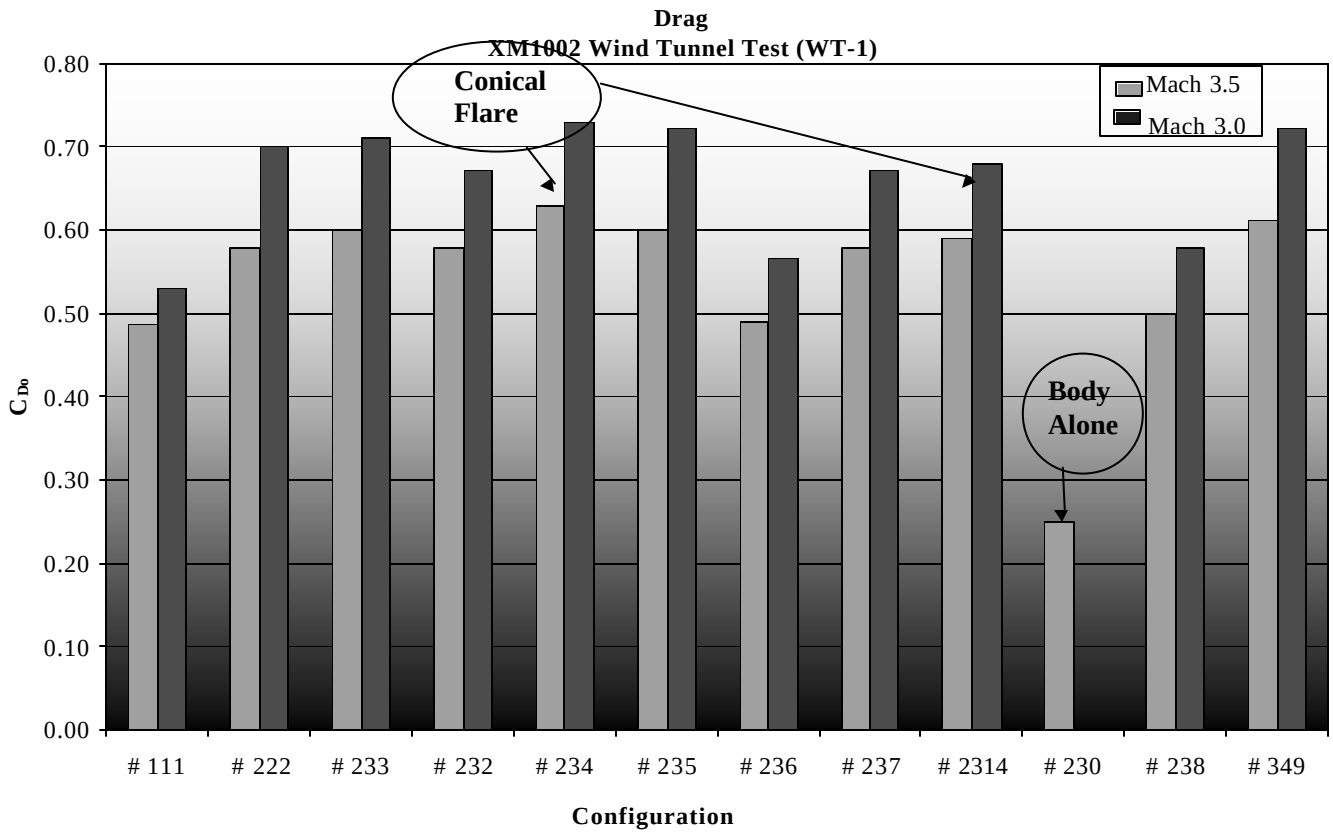

XM1002 Wind Tunnel Test - Results

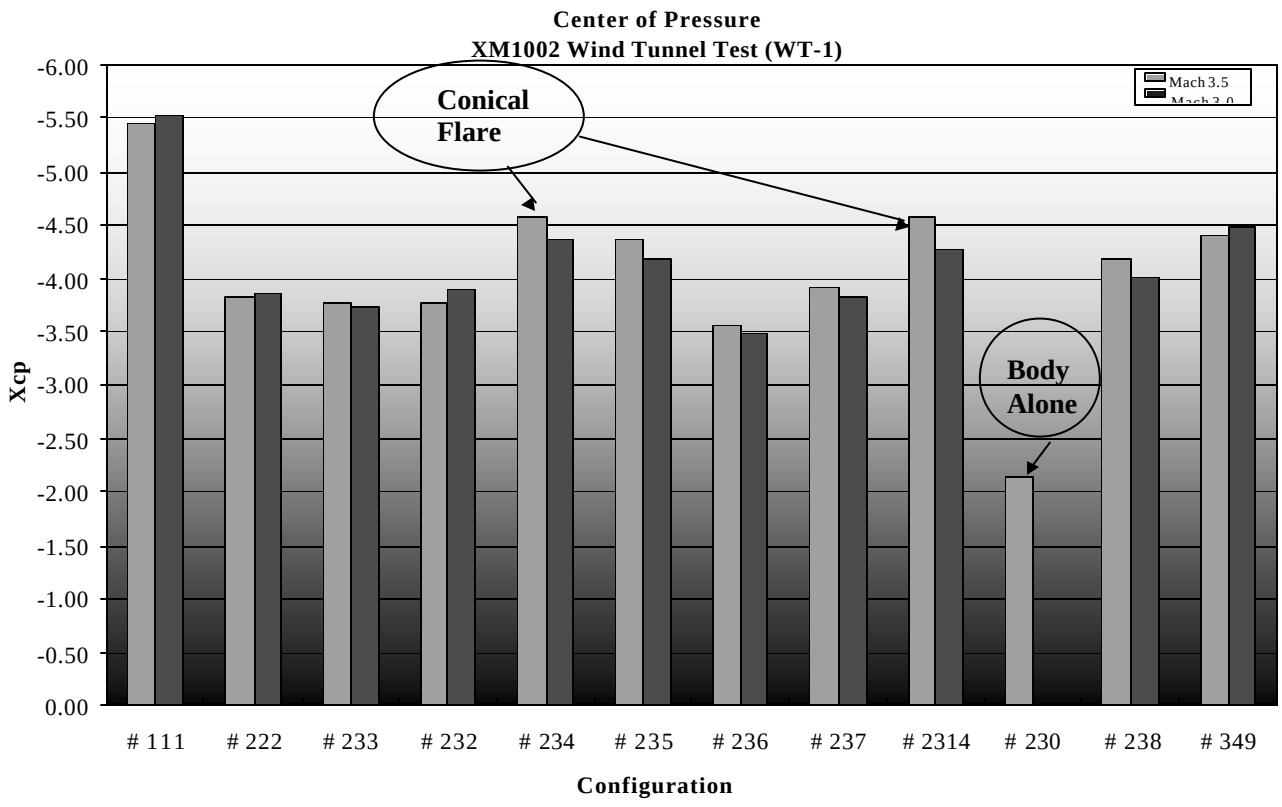

XM1002 Wind Tunnel Test - Results

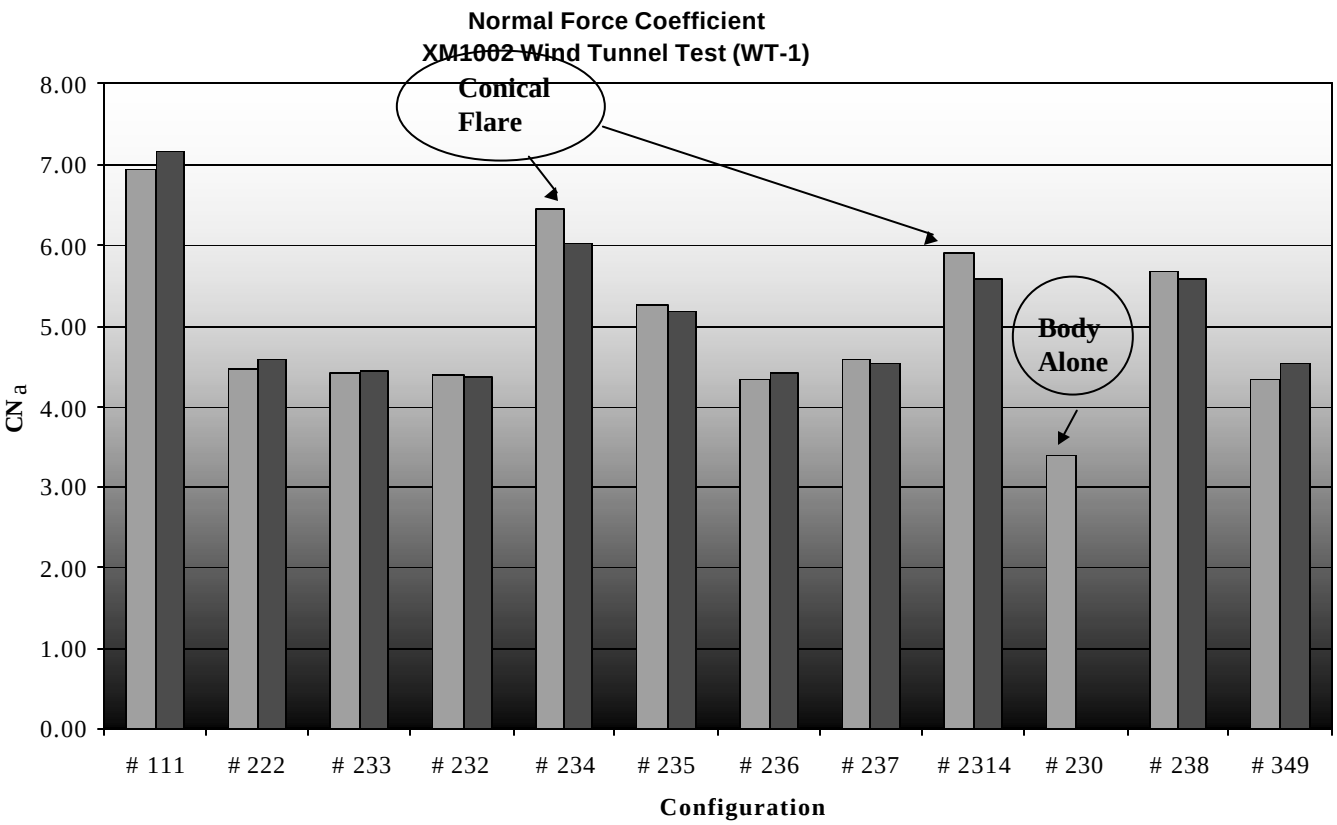

XM1002 Wind Tunnel Test - Results

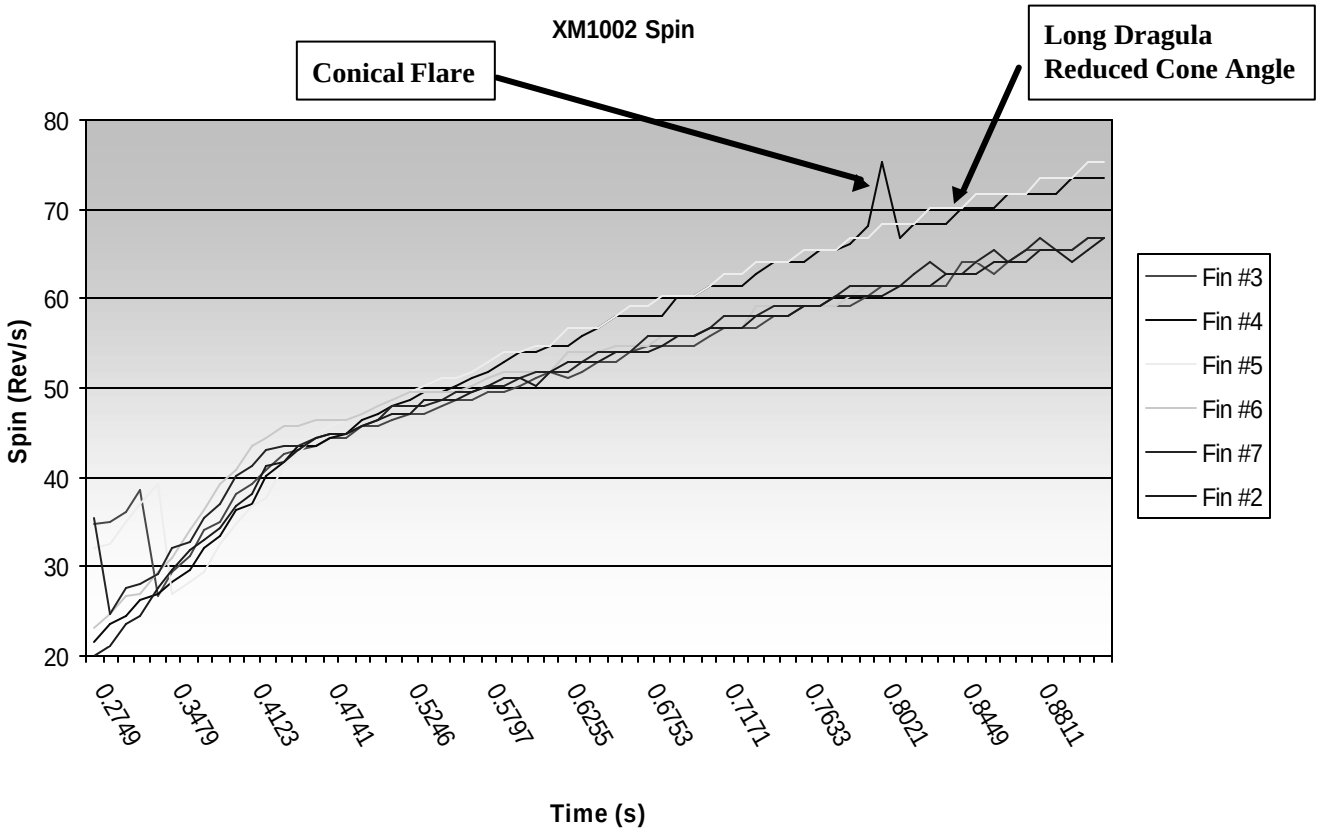

XM1002 TID Configurations

Configuration #1
Baseline "Dragula"
Jw = 0.267

Configuration #2
Conical Flare (118mm Base)
Jw = 0.136

Configuration #3
Conical Flare (114mm Base)
Jw = 0.129

XM1002 What's Next?

April 2001 – TID & Propellant Test

- **Establish Charge Weight**
- **Verify Muzzle Velocity**
- **1st Look at TID, Obturation & Sabot Discard**
- **Establish Drag Profile**

April 2001 – Sub-Scale Aero Range Test

- **Detailed Aeroballistic Coefficients**