TEAM FUZING

SEI

DAYRON

KDI

RAYMOND

www.teamfuzing.com

Programme Objectives

- Obsolescence
- Tooling
- Test Gear
- Safety
- Reliability
- Qualification
- 1st Article
- Production

TEAM FUZING

Qualification Programme

Sub System Tests

HARDWARE

3 off
sub-assys
(Electronic Module
& Cover Plate)

KDI

3 off
sub-assys
(S&A Module)

RAYMOND

3 off
Vibration

DAYRON

3 off
sub-assys
(Booster)

SEI

ENVIRONMENT
INTERNAL

QUALIFICATION
TESTS

a) 3 hrs hot temperature (+85°C)

b) 3 hrs cold temperature (-40°C)

3 Systems -Dayron
3 Boosters - SEI

- 3 hrs random vibration ($0.04g^2$/Hz between 20 Hz and 2 kHz) (Hot/Cold)

a) 1.5 hrs hot temperature (+85°C)

b) 1.5 hrs cold temperature (-40°C)

INTERNAL TEST
(TEST/INSPECTION)

KDI
a) Visual Inspection - Pre
b) Functional Test -Pre
c) Visual Inspection - Post
d) Functional Test - Post

RAYMOND
a) Visual Inspection - Pre
b) Functional Test -Pre
c) Visual Inspection - Post
d) Functional Test - Post

DAYRON
a) Visual Inspection – Pre
b) Functional Test -Pre
c) Visual Inspection – Post
d) Functional Test - Post

SEI
a) Visual Inspection prior to test
b) Visual Inspection following test
c) Firing into witness plate
d) Evaluation results

Sequence 1

a) & b) prior to test

Salt Fog

LIVE	INERT
3 off	3 off
a) & b)	**a) & b)**

Ascertains the ability to resist the effects of a moist, salt-laden atmosphere.
Subjected to a specified controlled environment for 24 hours.
(MIL-STD 331A Test 107.1)

a) Visual check
b) Impedance check

Contamination

LIVE	INERT
3 off	3 off
a) & b)	**a) & b)**

Determines the resistance of equipment to contamination from fuels, lubricants, hydraulic fluids, de-icers, solvents, fire-fighting agents & fresh/saltwater.
(Def Stan 00-35)

a) Visual check
b) Impedance check

Accelerated Ageing

LIVE	INERT
3 off	3 off
a), b), c), d)	**a), b), c), e)**

To determine the ability of equipment to withstand prolonged storage at extreme (hot & cold) temperatures.
(MIL-STD 331A Test 112.1 Procdr. 1)

a) Visual check
b) Impedance check
c) Leak Test
d) Fired
e) Strip & Examine

SEI DAYRON KDI RAYMOND

FMU-139B/B

- Further contract for 3000 FMU139B/B fuzes for a European country.
- Need to address the Power consumption issue to meet the FFCS requirement for the Navy.
- Potential further orders for other European and Middle/Far East Countries.

TEAM FUZING

FMU-139 B/B

SEI DAYRON KDI RAYMOND

Mitigation of FMU-139 Component Obsolescence

John N. Minnich, KDI Electrical Engineer

Ted Lewis, KDI Sr. Staff Engineer

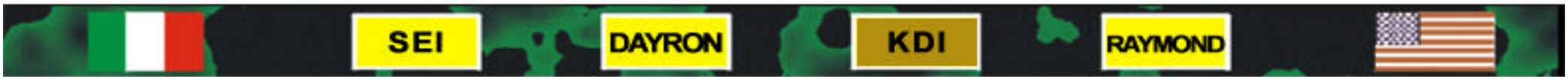

FMU-139 Chronology

- FMU-139A/B
  - Full scale procurement commenced in 1985
  - Last procurement was in 1993

- SAU - A FMU-139A/B derivative
  - Original build circa 1989-1992
  - Team Fuzing awarded contract in 1999, delivered units in 2000.

Two Major Design Challenges

- Replacing the obsolete 4-bit microcontroller.
  - Reverse engineering the logic without source code.

- Improving the operating duration when powered in FFCS mode.

Replacing the Microcontroller

- FMU-139 A/B based upon COP320C
  - 4 bit, CMOS design
  - Industrial temp range (-40 °C to 85 °C)
  - Low current: 100 µA at 5V with f_{clk} = 32 KHz

- KDI evaluated 8-bit µcontrollers and FPGAs
  - Architecture A: 8-bit µcontroller + ASIC
  - Architecture B: Two FPGAs / ASICs

Reverse engineering the fuze logic.

- Drawing package did not include source code.
  - ROM Object code available as printed media only !
- KDI attempted to reverse assemble this ROM
  - Output is uncommented assembly code.
  - Output appeared to have reverse assembly errors.
- KDI abandoned the µcontroller approach due to these issues.

What legacy documentation was available to KDI?

- FMU-139A/B Mil. spec. MIL-F-85815A(AS)
  - FFCS and Turbine operating modes
  - High & low drag arm times
  - Impact or proximity detection requirements
  - Impact or Prox function delay timing
- Navy DWG package 1379ASxxx
- SAU DWG package SK105xxxx

What information was missing ?

- Drawing package did not include source code.
  - Internal self tests
  - Detailed DUD logic requirements
  - Digital filtering / signal conditioning of inputs

To address these “holes” KDI requested a Commercial Service Agreement with the Navy

SAU Implementation

- 2 FPGAs replace the µcontroller and ASIC
  - FPGA, U_{402} initiates Gag rod and DET circuitry
  - FPGA, U_{401} initiates Bellows circuitry
- Switching regulator based on FMU-139 A/B "JANTX" implementation rather than SAU
- Components are predominantly "through-hole"

FPGA Partitioning

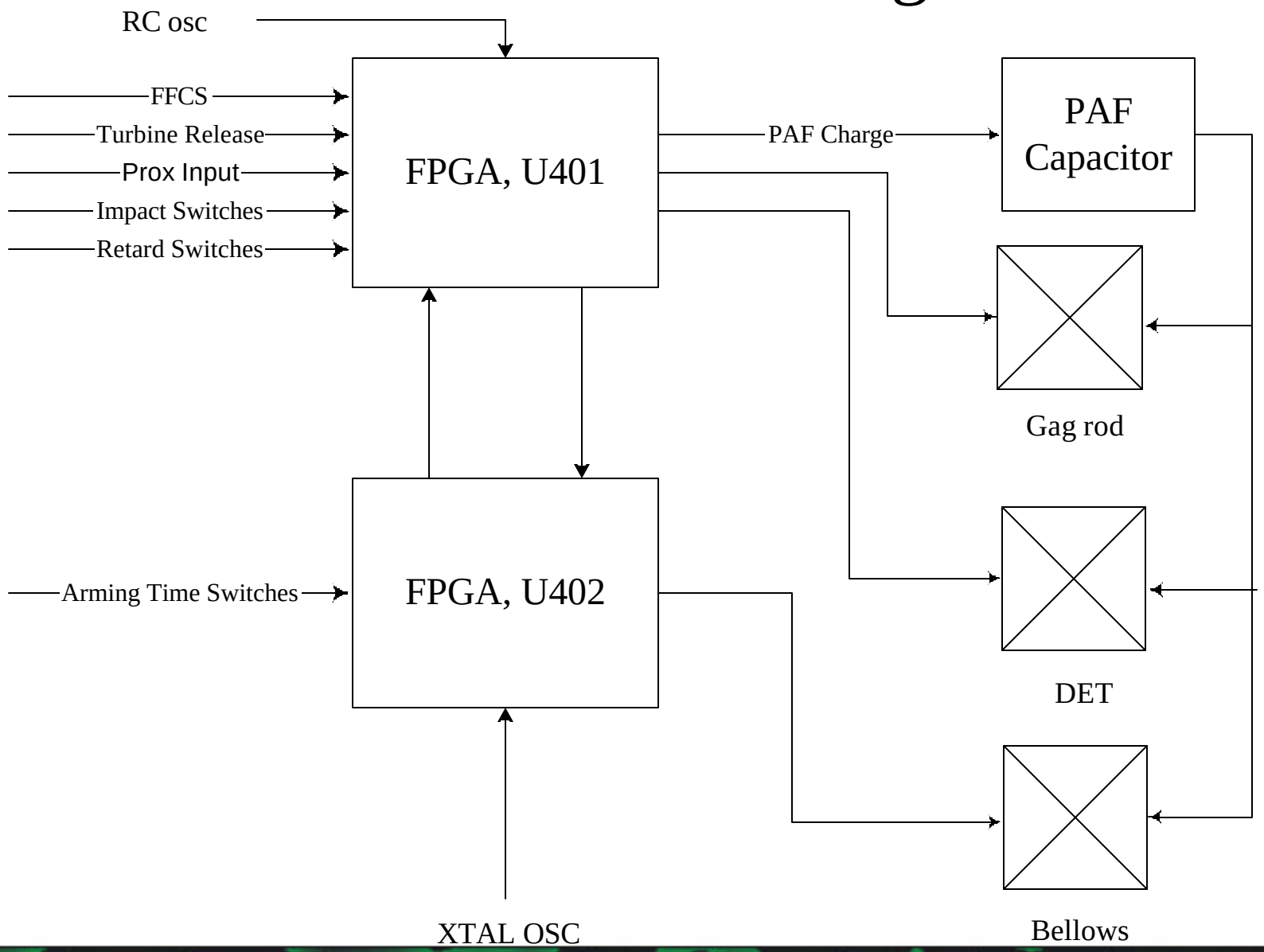

SAU Production Panel

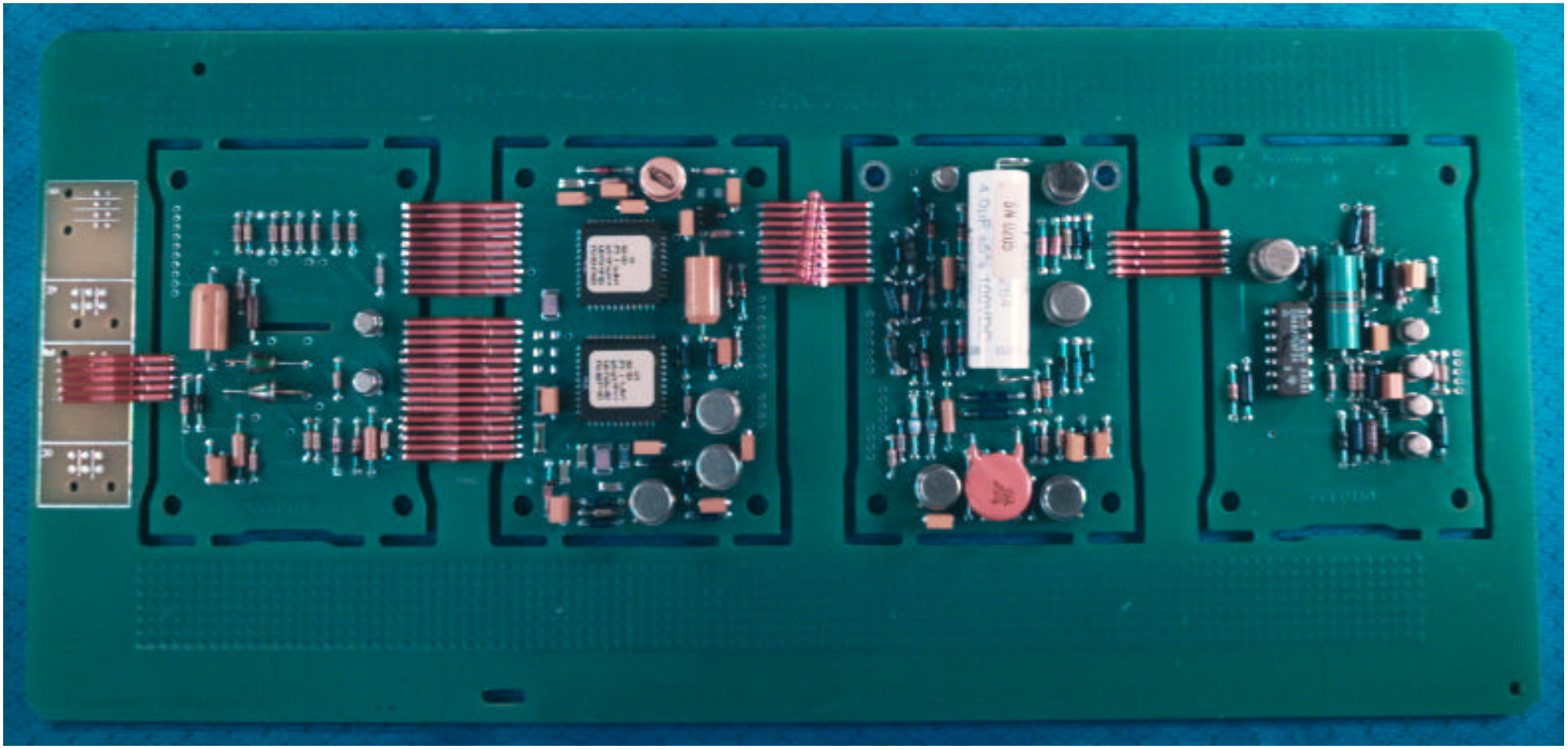

SEI DAYRON KDI RAYMOND

FMU-139B/B Implementation

- 2 ASICs replace the SAU FPGAs
- KDI improved the switching regulator
  - Higher efficiency toroidal inductor
  - All 3 select resistors eliminated
- Components are predominantly surface mount

FMU-139 B/B Prototype Panel

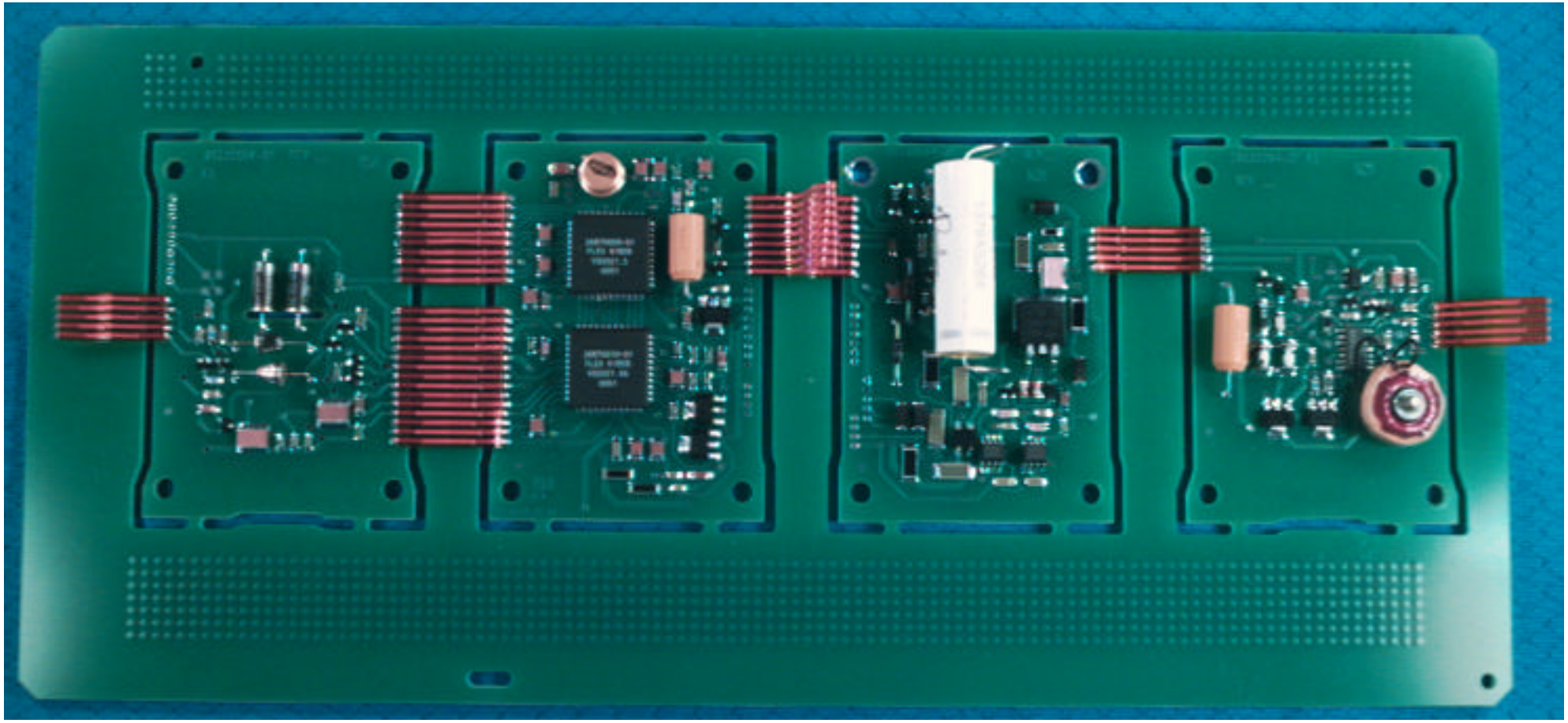

SEI DAYRON KDI RAYMOND

FFCS Mode Energy Balance

$$\frac{1}{2} C_1 V_1^2 = \frac{3}{2} C_2 V_2^2 + (V_{bus})(i_{ave})(t)$$

C1 ➔ Main energy storage capacitor
C2 ➔ PAF capacitor

Let: $C_1 = 4.0\ \mu F$, $C_2 = 47\ \mu F$
$V_1 = 195$, $V_2 = 9$, $V_{bus} = 3.8$

For: $t = 60$ seconds, $i_{ave} = 308\ \mu A$

Benefits of the Team Fuzing Design Changes

- Operating duration when powered in FFCS mode exceeds the original FMU-139 A/B
- Extended operating duration facilitates higher altitude bomb release
- Modern and reliable manufacturing process.
- Potential cost reduction.
- Based on proven design.