JAMI
Flight Termination System
A Cooperative Development Between NAWC/CL and KAMAN

Dale Spencer, Presenter
Andy Yuenger, Co-Author

45th Annual Fuze Conference

Long Beach, California

April 18th , 2001

Overview

- **Joint Advanced Missile Instrumentation**
  - **Roles**
  - **System**
- **FTSA**
  - **Requirements**
  - **Features**
  - **Block Diagram**
  - **Design/ Implementation**
  - **Test Results**
  - **Status**
  - **Plans**

DEVELOPMENT UNDER CRADA

- Cooperative Research and Development Agreement
  - Raymond Engineering Operations (REO)
  - Signed 12 April 1999
  - Division of Responsibilities
    - **China Lake**
      - **Electrical/Explosive Design and Development**
      - **Environmental Testing**
    - **REO**
      - **Packaging**
      - **Hardware Manufacturing**

JAMI FTS TEAM

- **Program Dir :** **Mr. Don Scofield, NAWCWD, China Lake**
- **Navy Deputy:** **Mr. Dave Powell, NAWCWD, Pt Mugu**
- **Project Engr:** **Mr. Andy Yuenger, NAWCWD, China Lake**
- **EE Design (Past):** **Mr. Mike Haddon, NAWCWD, China Lake**
- **EE Design (Present):** **Mr. Gabe Soto, NAWCWD, China Lake**
- **Analyst:** **Mr. Jim McVay, NAWCWD, China Lake**
- **Industry Partner: Kaman Aerospace Corporation/ Raymond Engineering**
  - **ME Design:** **Mr. Robert Spooner**
  - **FCDC Interface:** **Mr. Ted Horbacewicz**
  - **Test Engineer:** **Mr. Mario Fasulo**
  - **Reliability & Safety:** **Mr. Pete Rohner**
  - **Firmware:** **Mr. Pete Solari**
  - **Project Engineer:** **Mr. Dale Spencer**

JAMI System

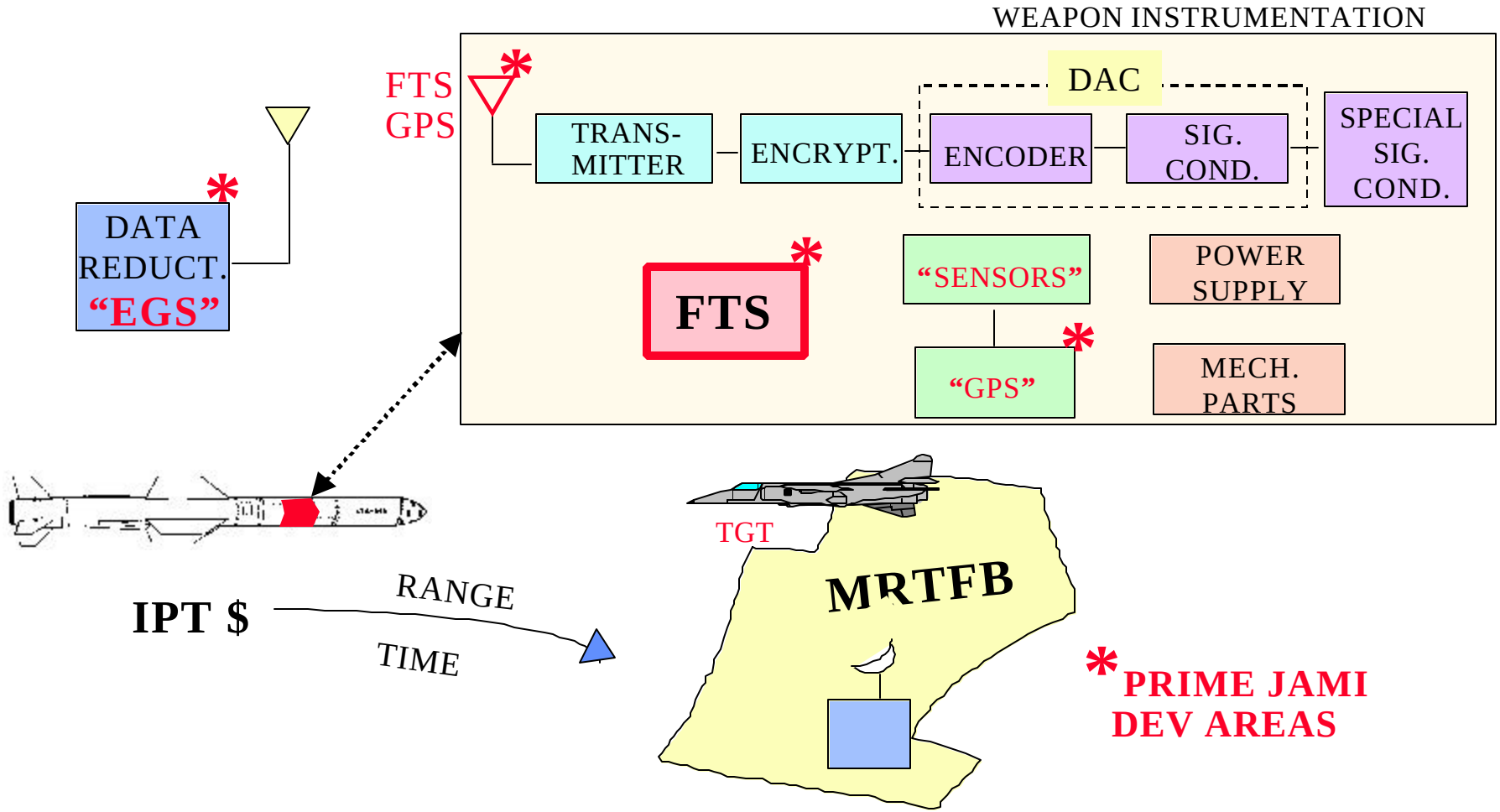
WEAPON INSTRUMENTATION
FTS
GPS
TRANS-
MITTER
ENCRYPT.
DAC
ENCODER
SIG.
COND.
SPECIAL
SIG.
COND.
DATA
REDUCT.
"EGS"
FTS
"SENSORS"
POWER
SUPPLY
"GPS"
MECH.
PARTS
TGT
MRTFB
IPT $
RANGE
TIME
PRIME JAMI
DEV AREAS

FTSA in JAMI System

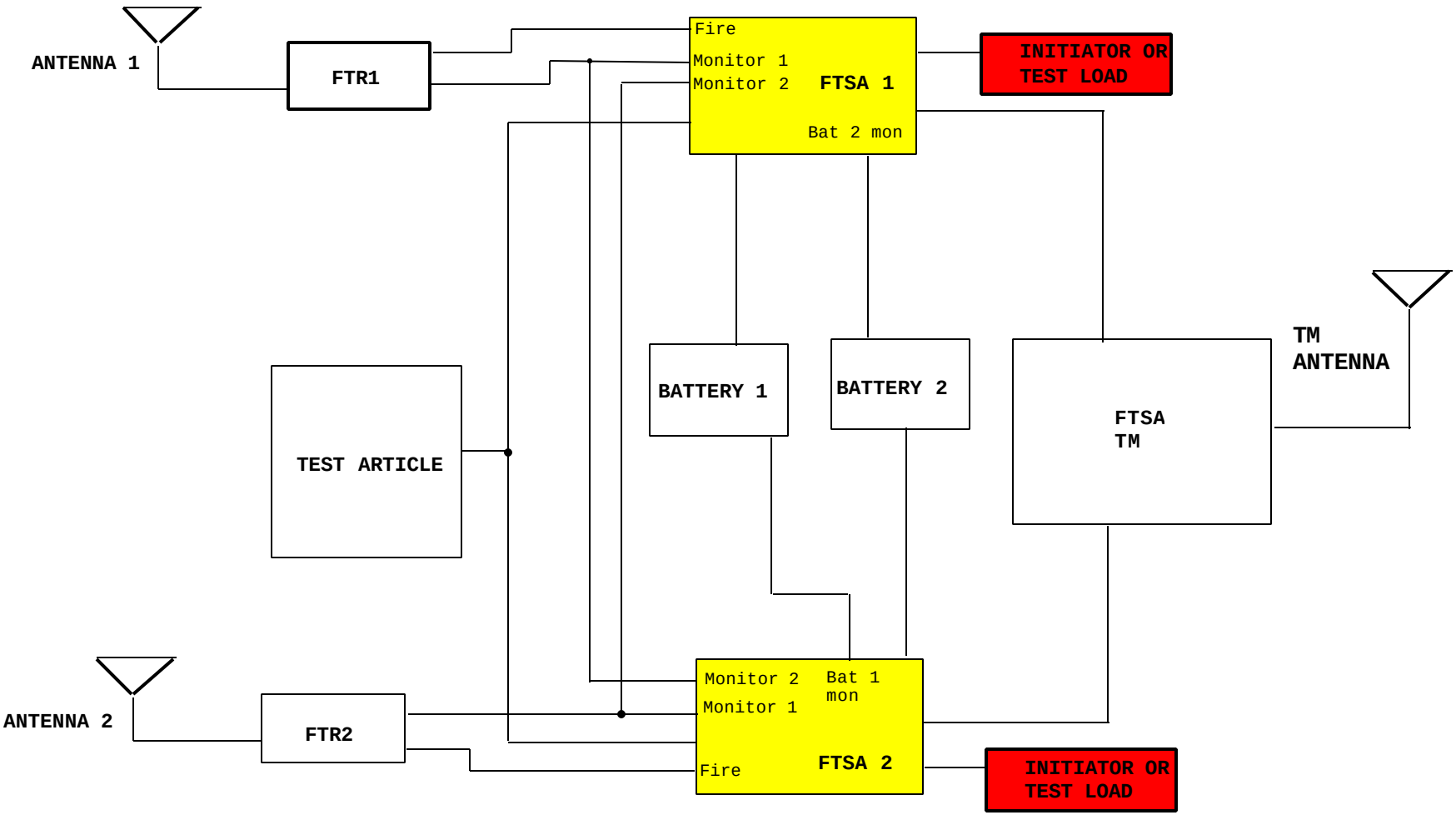

FTSA VS S&A

- FTSA
  - Overriding Concern is to Not Allow the Weapon to Go Outside the Range Footprint
  - Defining Specification is RCC 319-99
- S&A
  - Overriding Concern is to Not Allow Unintended Initiations
  - Defining Specification is Mil-Std-1316

JAMI FTSA BENIFETS

- Standardization
- Off-the-shelf availability
- Low Unit Cost
- Small Size & Weight

JAMI FTSA Requirements

- Compliant With RCC 319-99
- Programmable For Multiple Applications (at test facility)
- Small Size (< 9 in^3/unit)
- Low Cost (~$2000/unit)
- Qualified To "Worst Case" Environmental Levels
  - Based on Environments of Potential Users
- Removable Explosives (LEEFI, Etc.)
- Fully Testable (Including HV Output)

Block Diagram of JAMI FTSA

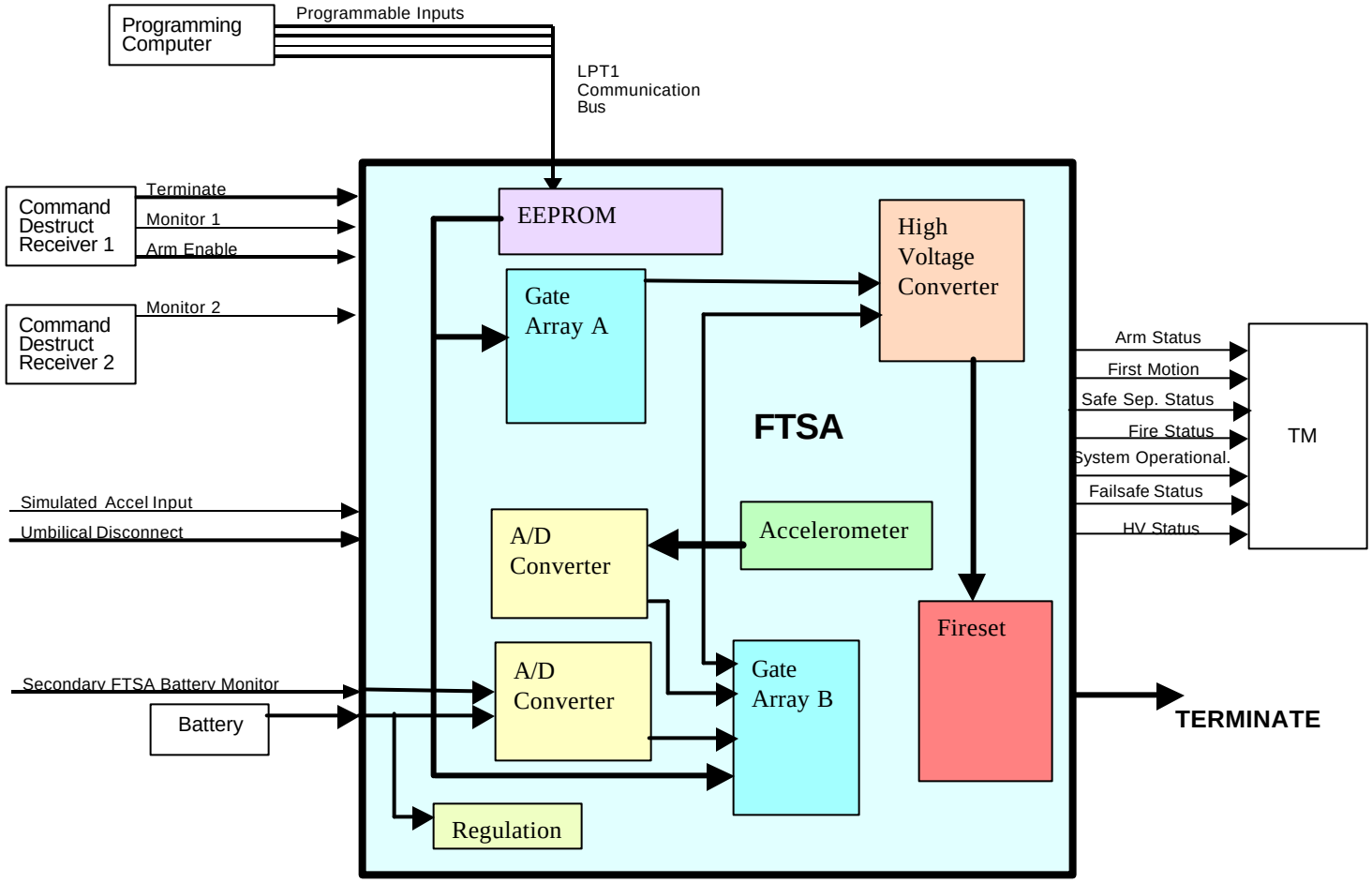

INPUTS & OUTPUTS

- **Programmable Inputs**
  - **Failsafe Enable**
    - **Loss of Monitor (tone)**
    - **Loss of Power**
  - **First Motion Enable**
    - **First Motion Valid Time**
  - **Acceleration Enable**
    - **Axis of Acceleration**
    - **Acceleration Level**
  - **Umbilical Disconnect Enable**
  - **Safe Separation Time**
  - **Arm Enable**
- **Non-Programmable**
  - **Terminate Command**

- **OUPUTS**
  - **Flight Destruct (Explosive)**
  - **Safe/Arm Status**
  - **Fire Status**
  - **Safe Separation Status**
  - **First Motion Status**
  - **System Operational**
  - **Failsafe Status**

Logic Circuits

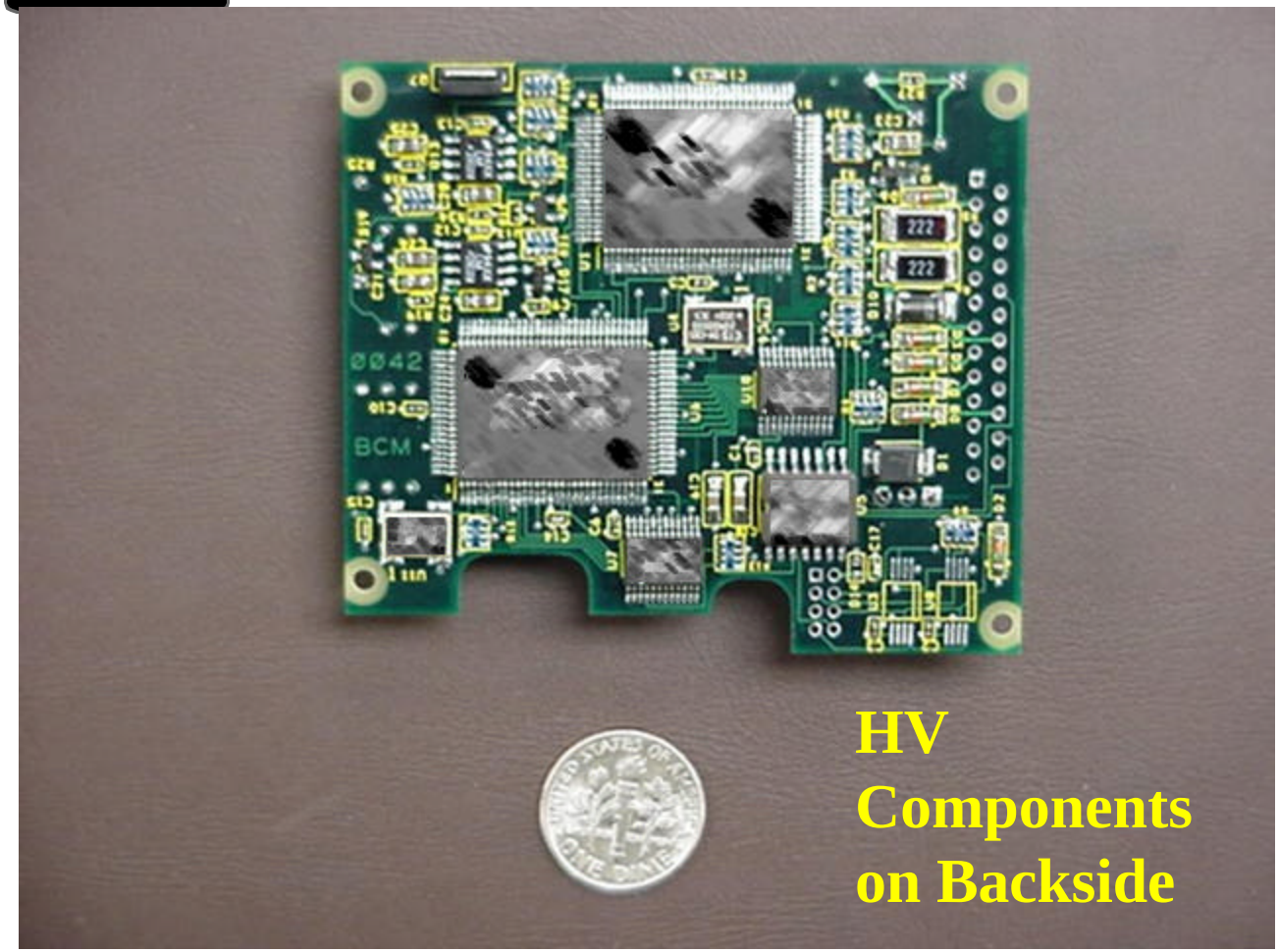

FTSA Housing Model

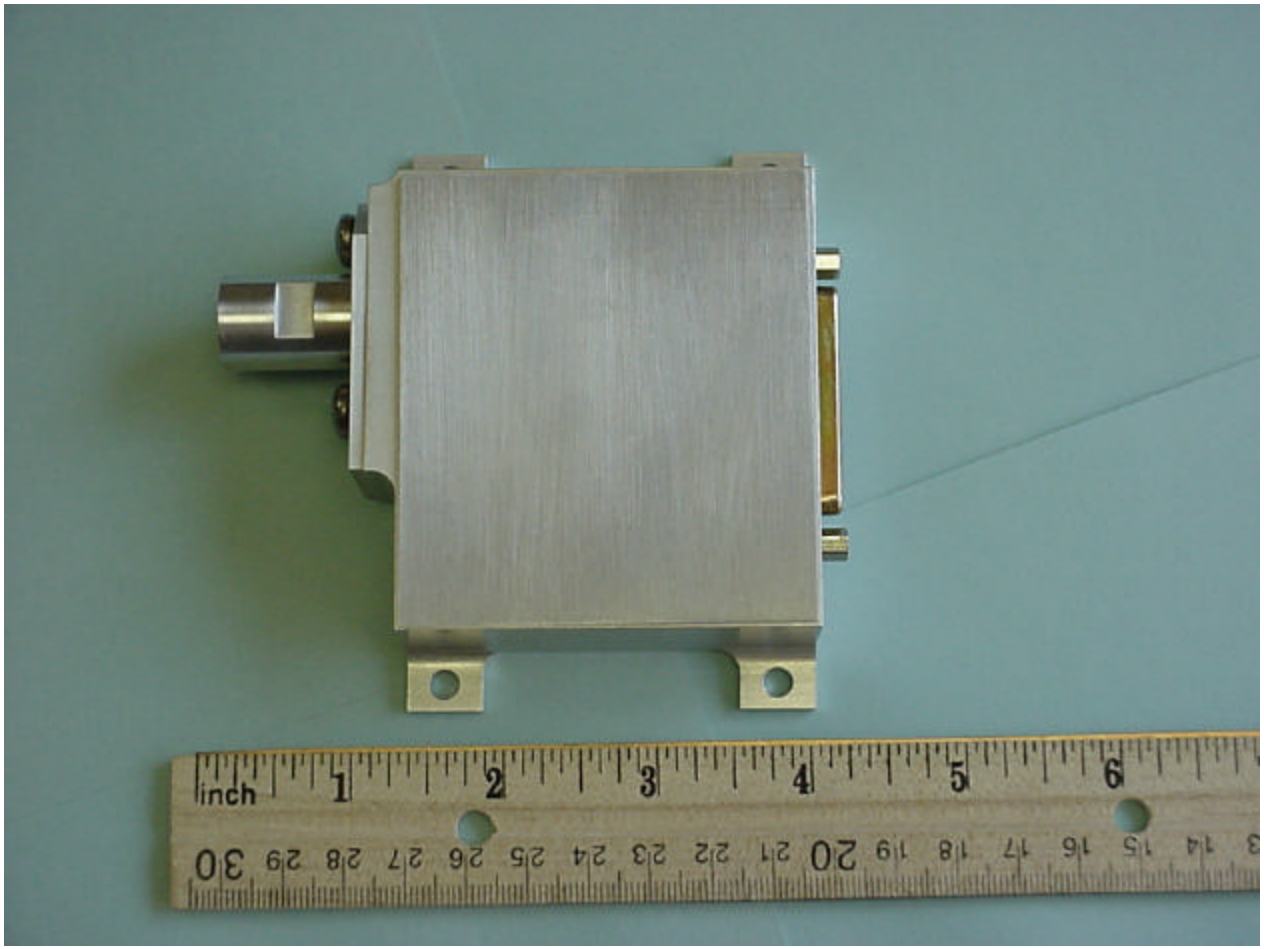

FCDC Components

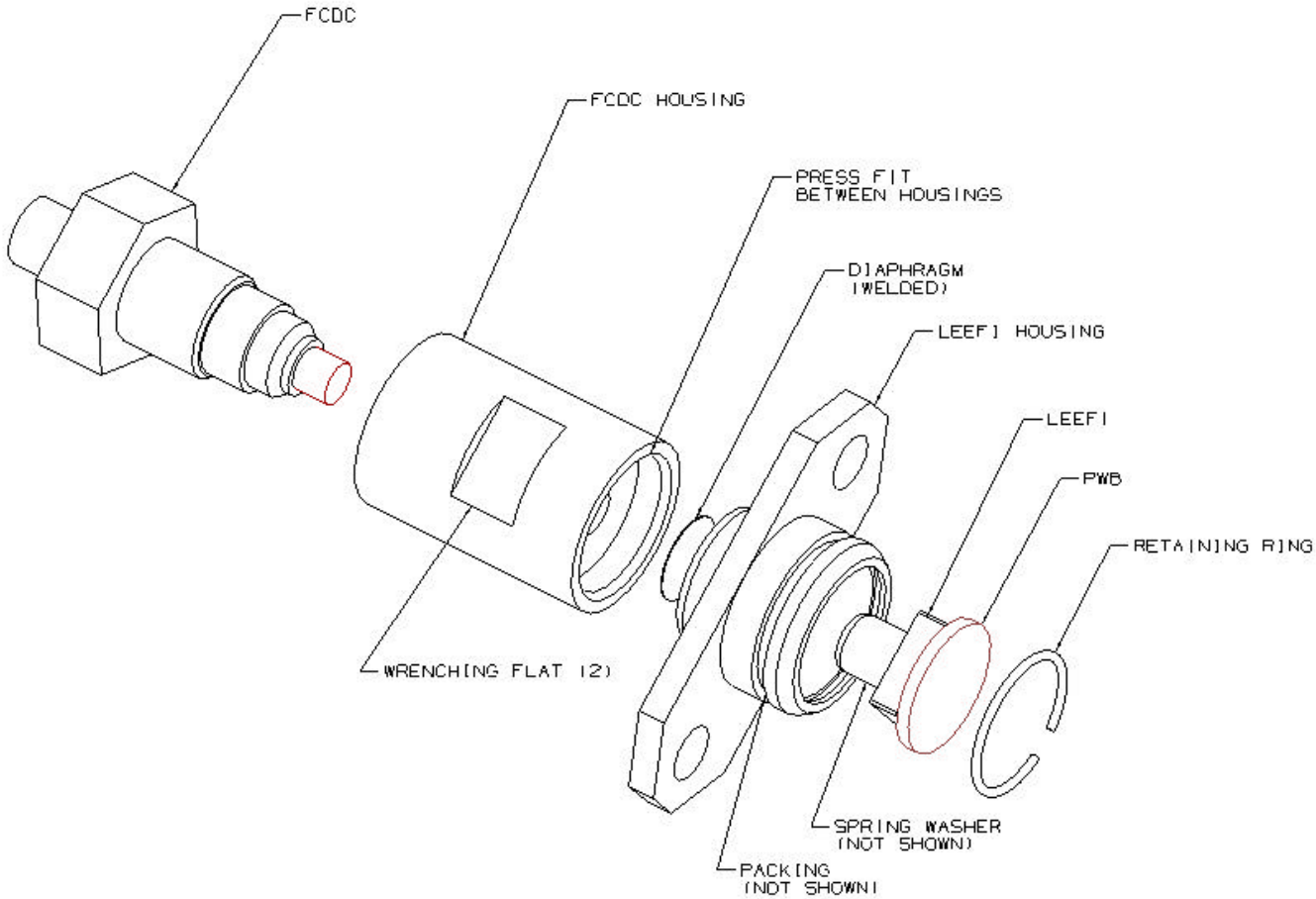

JAMI FTSA FIRESET

- Novel Design
- Small In Size
- Low In Cost (<$20)
- High Reliability
  - 3200 shots @ 1500A
- No Unique Parts
  - All COTS

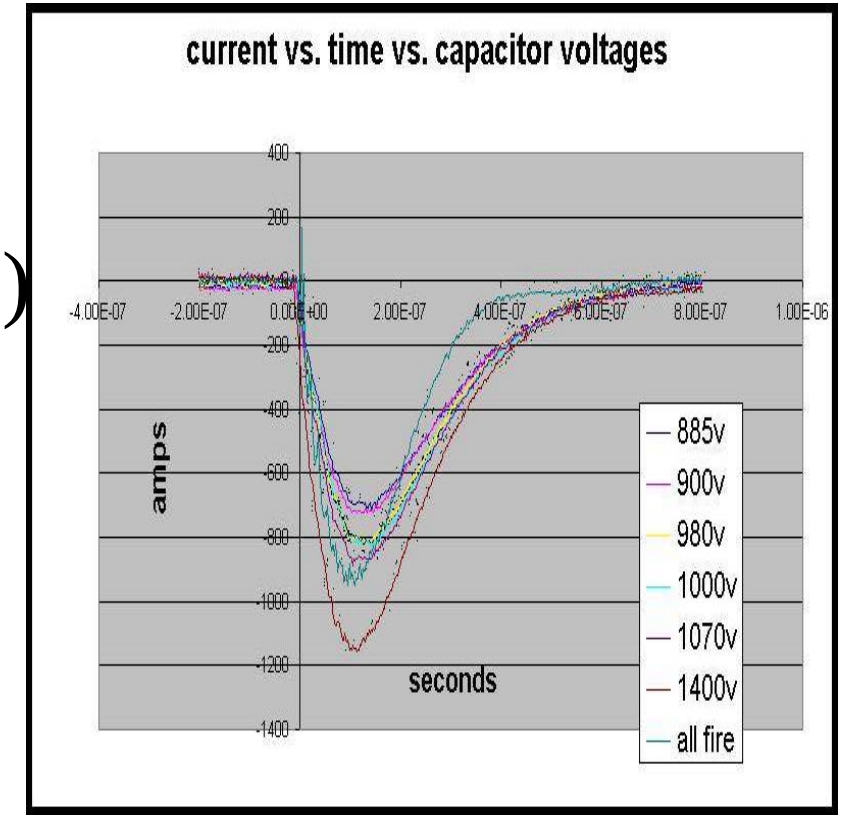

TEST ENVIRONMENTS

- Range Safety Document RCC 319-99
  - May be First FTSA Fully Qualified to New Document

- Database of Environmental Profiles of Numerous Weapons Systems

STATUS

- **Specification Completed**
- **Housing Design Complete**
- **FCDC Interface Complete**
- **Electrical Design Complete**
- **Prototype Board built and tested**
- **Fireset Studies Complete**
- **Pre-production**
  - **Design Update in final stage**
  - **Boards planned**
  - **Pre-Qualification tests to be run to find "weak points"**
  - **Expect Qualification Completion Second Qtr 2002**

Developmental Testing Summary

- Fireset
- Logic Circuits
  - Functional Test of Disable Parameters
  - Programmable Time and Thresholds Verification
- Temperature Range Tests

Developmental Test Errata

- **Electrical Corrections**
  - **Q1 pins 3 & 4 Reversed**
  - **R19& R25 Resistance Value Change for Specified Threshold**
    - **47.5k to 68k**
  - **Missing Run from R21 Node 6 to node 5**
  - **Missing Pad R17**
  - **Maxim A/D MAX154 no longer std. production item**
  - **2SK2663 (HV Transistor) no longer in production.**
- **Mechanical Corrections**
  - **Component interference with Tactical Connector**
  - **Q7 on wrong side of board, through hole reverse placement**
  - **Component Height**

Design Analysis Summary

- **Tolerance**
  - **Preliminary circuit tolerance analysis performed with pre-production design**
- **Stress**
  - **Design performed with TE000-AB-GTB-010 as a guideline**
- **Fault Tree**
  - **Design performed to preclude single point failure and implement desired modes of operation.**
- **Final Analysis, including FMECA, to be completed in conjunction with pre-production evaluation testing.**

Fire Circuit Tests

- **Established All-Fire Voltage**
  - **Explosive Tests forthcoming**
- **Temperature Cycled -30°C to +92°C**
  - **Output Current degraded 5% maximum**
- **Range Safety Requirement for 50% Energy Margin Exceeded by 105 milli-joules threshold (predicted), 203 milli-joules available. Based on nominal capacitor value.**

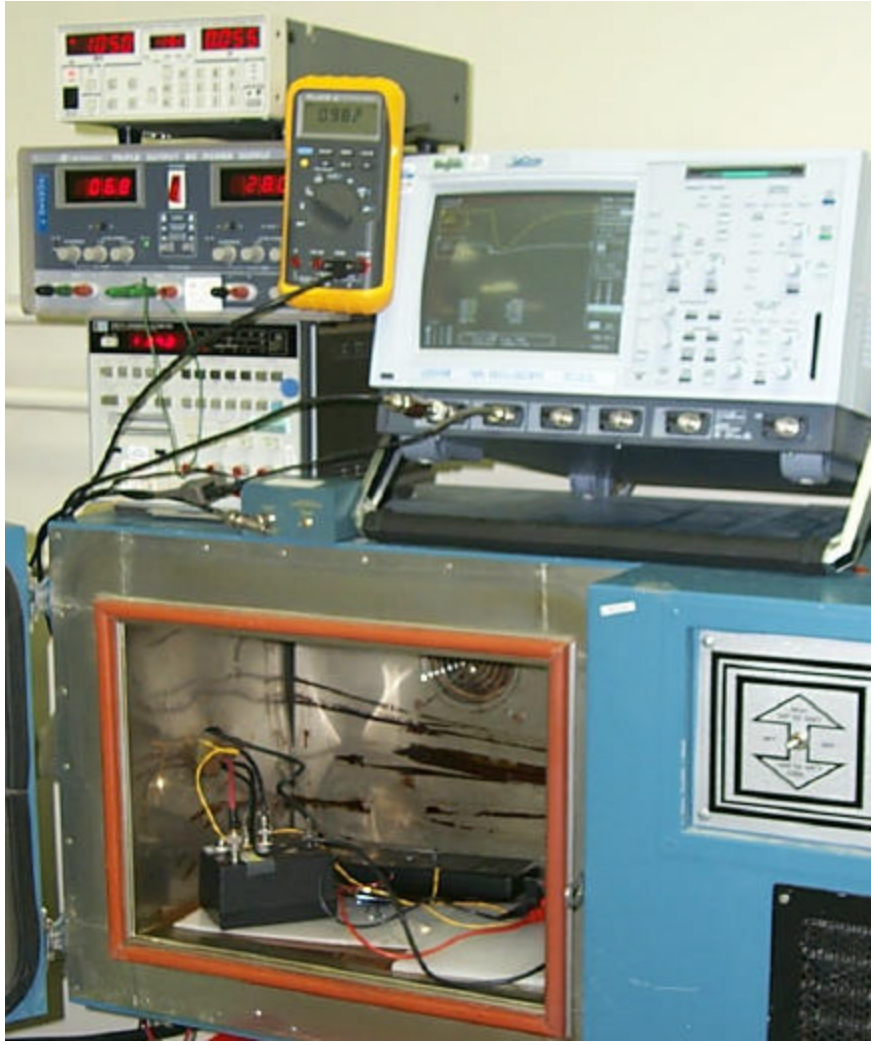

Functional Verification Tests

First Motion Valid

Programmed Time	Measured Time	% Error
5 Seconds	5.017	0.3
10 Seconds	10.017	0.2
155 Seconds	154.90	0.06
160 Seconds	160.03	0.02

Safe Separation

Programmed Time	Measured Time	% Error
0.1 Seconds	0.10000	0
10 Seconds	10.2	0.19
25 Seconds	25.6	2.3

Functional Verification Tests

Loss of Power Threshold

Programmed Time	Measured Voltage	% Error
21 Volts	20.74	1.2
22 Volts	21.22	3.7
23 Volts	22.27	3.3
24 Volts	23.6	1.7
25 Volts	24.9	0.4
26 Volts	25.7	1.1
27 Volts	27.2	0.7
28 Volts	28.5	1.7

Loss of Tone

Programmed Time	Measured Time	% Error
1 Second	1.02	2.0
2 Seconds	2.04	2.0
31 Seconds	31.7	2.2
32 Seconds	32.79	2.4

Plans

- **Qualification Plan in Process**
- **Number of units under CRADA is 12**
  - **2 Pre-qualification Engineering**
  - **10 Range Qualification Units**

MILESTONE	00	01	02	03
• Prototype built & tested.....D				
• Pre-production boards .....D built and tested				
• CDR.....D				
• Qualification Hardware built...D				
• Qualification.....D				

FTSA Feedback

- Your Comments, Questions or Concerns