PEO GCSS

Firepower Symposium

Project Manager Brigade Combat Team

GM GDLS Defense Group

The Road To The Objective Force "Armaments for the Army Transformation"

COL David Ogg
Project Manager, BCT
COM 810-753-2000
DSN 786-2000
OggD@tacom.army.mil

Mr. Don Howe
GM GDLS Defense Group, LLC
Program Manager
810-826-3757
Don.E.Howe@gm.com

Vanguard For Army Transformation

PM BCT

Army Vision Statement

"The Best Off- the- shelf Technology Available Today, *The IBCTs Will Bridge That Operational Shortfall And Help Meet Warfighting And Contingency Needs For The Next Twenty- plus Years. This Interim Force Will Also Serve As The Experimental Vanguard For The Objective Force. It Will Validate Operational And Organizational Concepts, Training And Leader Development Initiatives, And Deployment Scenarios* ***For The Next Nine Years As We Await The Arrival Of The Objective Force.***

We Are Once Again An Army Between The Wars, And Once Again, ***We Are Challenged To Adjust To Break Old Paradigms****. So We Are Transforming To Become Strategically Responsive And Remain Dominant Across The Entire Spectrum Of Military Operations –"*

General Eric K. Shinseki
AUSA Mid-Winter Conference
Fort Lauderdale, FL 2 March 01

Vanguard For Army Transformation

PM BCT

The Army Transformation

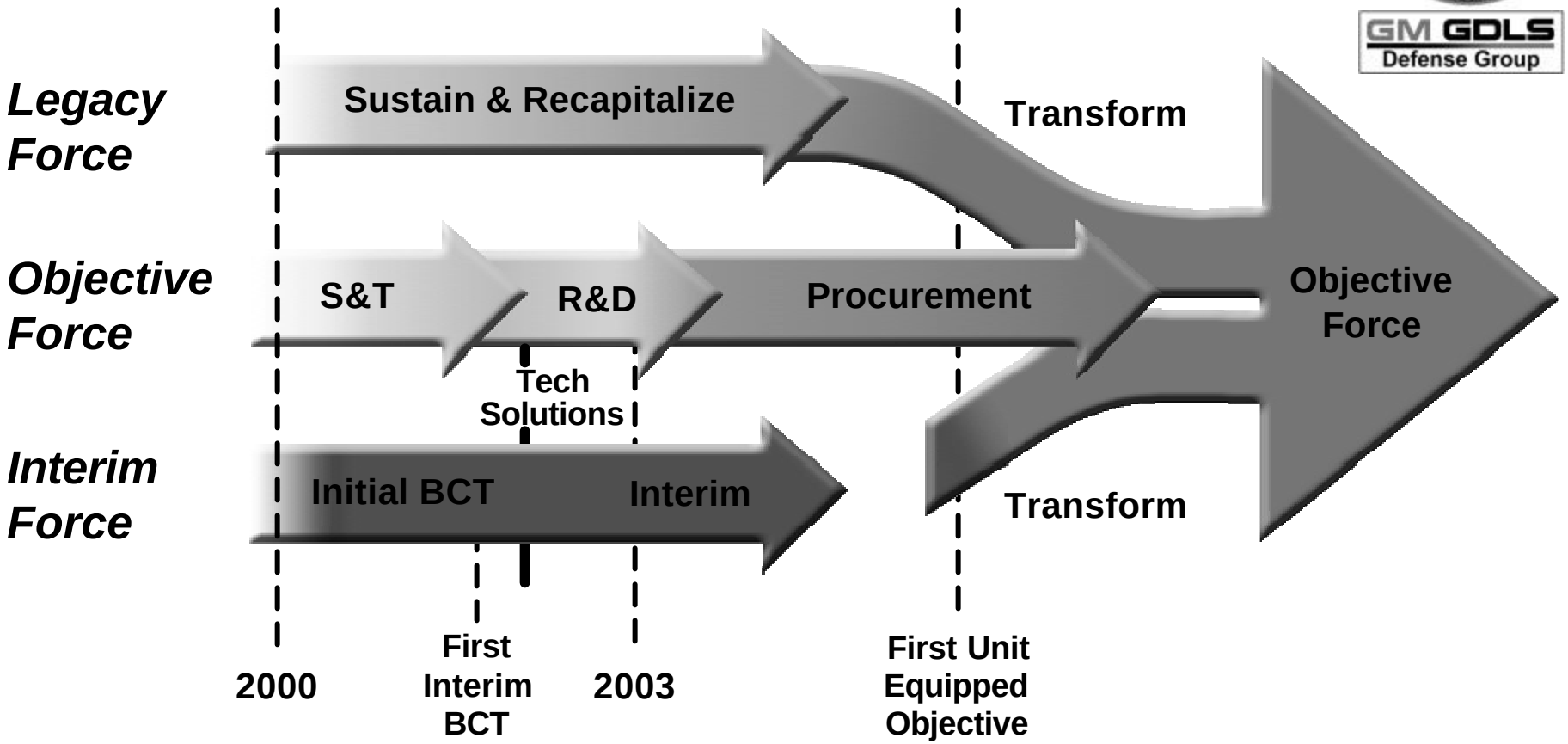

. . . Responsive, Deployable, Agile, Versatile, Lethal, Survivable, Sustainable

Vanguard For Army Transformation

PM BCT

Organizational Structure
GM GDLS Defense Group L.L.C., & ASA(ALT)/PEO/PM

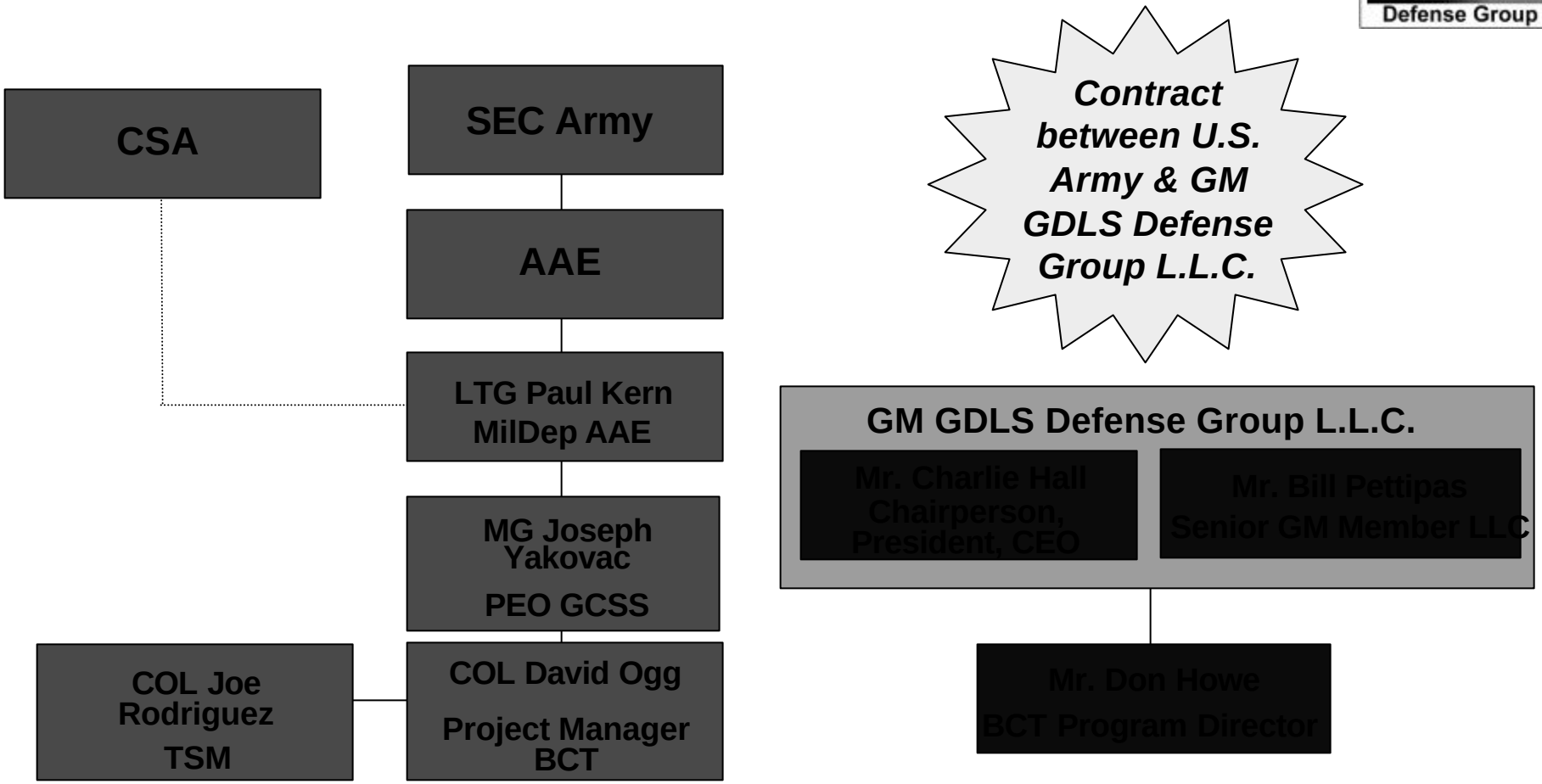

Vanguard For Army Transformation

PM BCT

PM Brigade Combat Team Organization

Project Manager
COL David Ogg

TRADOC Systems Manager
COL Joe Rodriquez

Deputy Project Manager
John Gerlach

Product Manager ICV
LTC Jim Parker

Product Manager MGS
LTC Jack Reiff

Technical Management Division
Terry Dean

Business Management Division
Mike Viggato

ILS Division
Dan Maksymowicz

Acquisition Support Division
Connie Tucker

MD Cell Ft. Lewis
MAJ Bob Schumitz

Special Projects Office
Lethality Cell
Picatinny
Mr. Gene Del Coco

Vanguard For Army Transformation

PM BCT

GM GDLS Team Structure

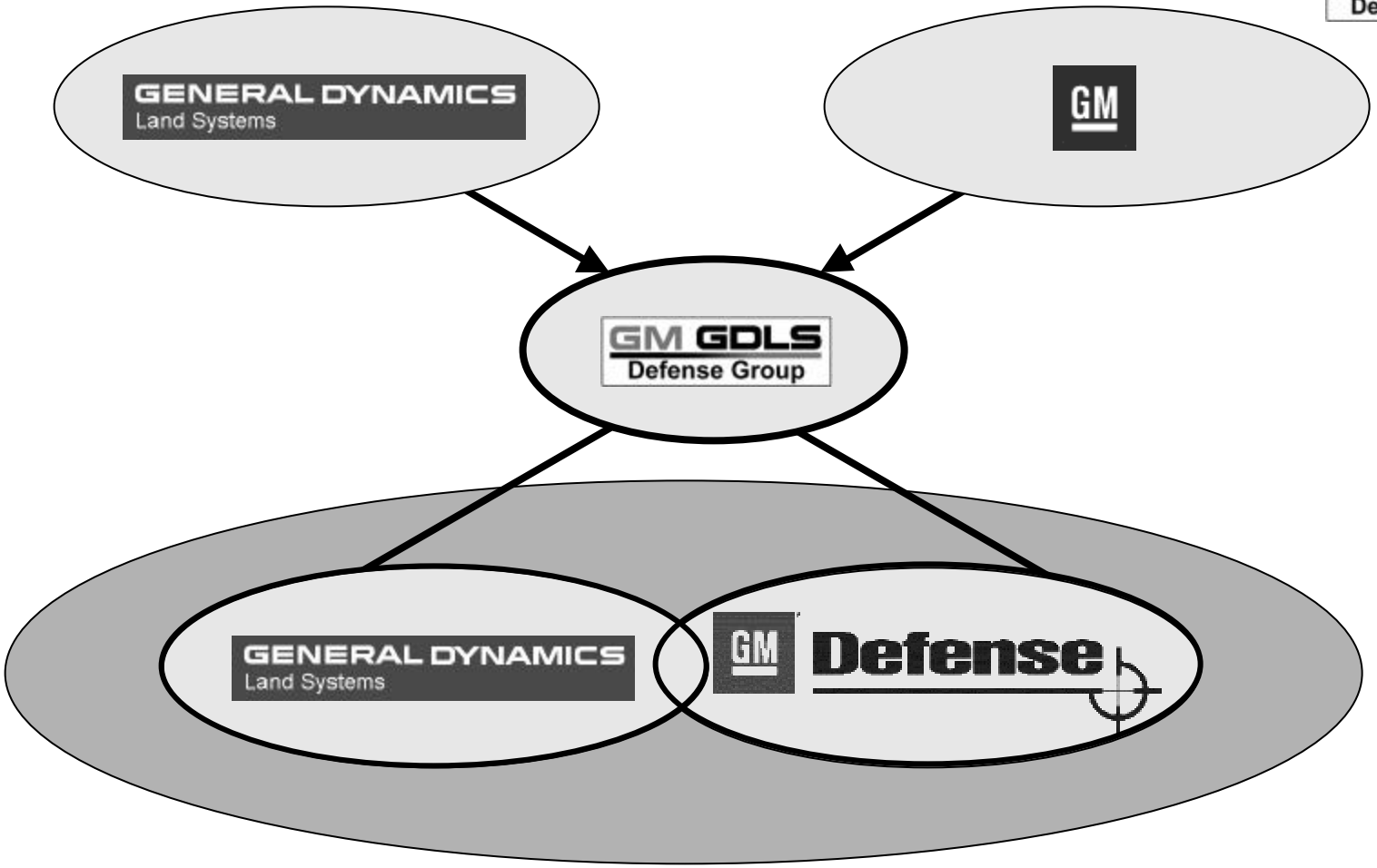

Vanguard For Army Transformation

PM BCT

GM GDLS Team

GM GDLS Defense Group LLC, Joint Venture

- D. Howe, Program Director
- J. Ruma, Deputy Prog. Director
- L. Meese, Supportability
- D. Hickmott, Finance
- D. Fillip, Contracts
- TBD, Customer Liaison
- K. Sandberg, Risk Mgmt
- R. Wyrembelski, GDLS PM
- T. Eagleson, GMD PM
- E. Jones, Office Admin
- N. Thorpe, Legal
- M. Tillman, Finance
- T. Mcleod, Contracts
- F. Bennett, Sys Engrg

D. Steckle / T. Frey	Engineering
C. Hastie / B. Motala	Materials
D. Minnema / T. Plunkett	Production
B. Drake / L. Meese	Supportability
T. Bento / J. Ebert	Contracts
A. DelBen / S. Young	Finance

GM GDLS Work Scope Summary

Veh	Design	Hull U	Fab L	Assembly	Procurement
MGS	GD	GD	GM	GD	**Shared**
MC	GD	GD	GM	GD	**Shared**
NBC	GD	GD	GM	GD	**Shared**
MEV	GD	GD	GM	GD	**Shared**
ICV	GM	GD	GM	GDGM	**Shared**
FSV	GM	GD	GM	GD	**Shared**
RV	GM	GD	GM	GDGM	**Shared**
ESV	GM	GD	GM	GD	**Shared**
ATGM	GM	GD	GM	GD	**Shared**
CV	GM	GD	GM	GD	**Shared**

Supportability:	GD	**Shared**	GM
	Fielding Team	**Training**	FSR
	Site Management	**Provisioning**	TMDE
	IETMs	**Spares**	Equip Spt
		Tech Manuals	

Delivery Orders to date – 9 (vehicles;nonrecurring; and services)

Total vehicles on order – 413

Product Management IPT

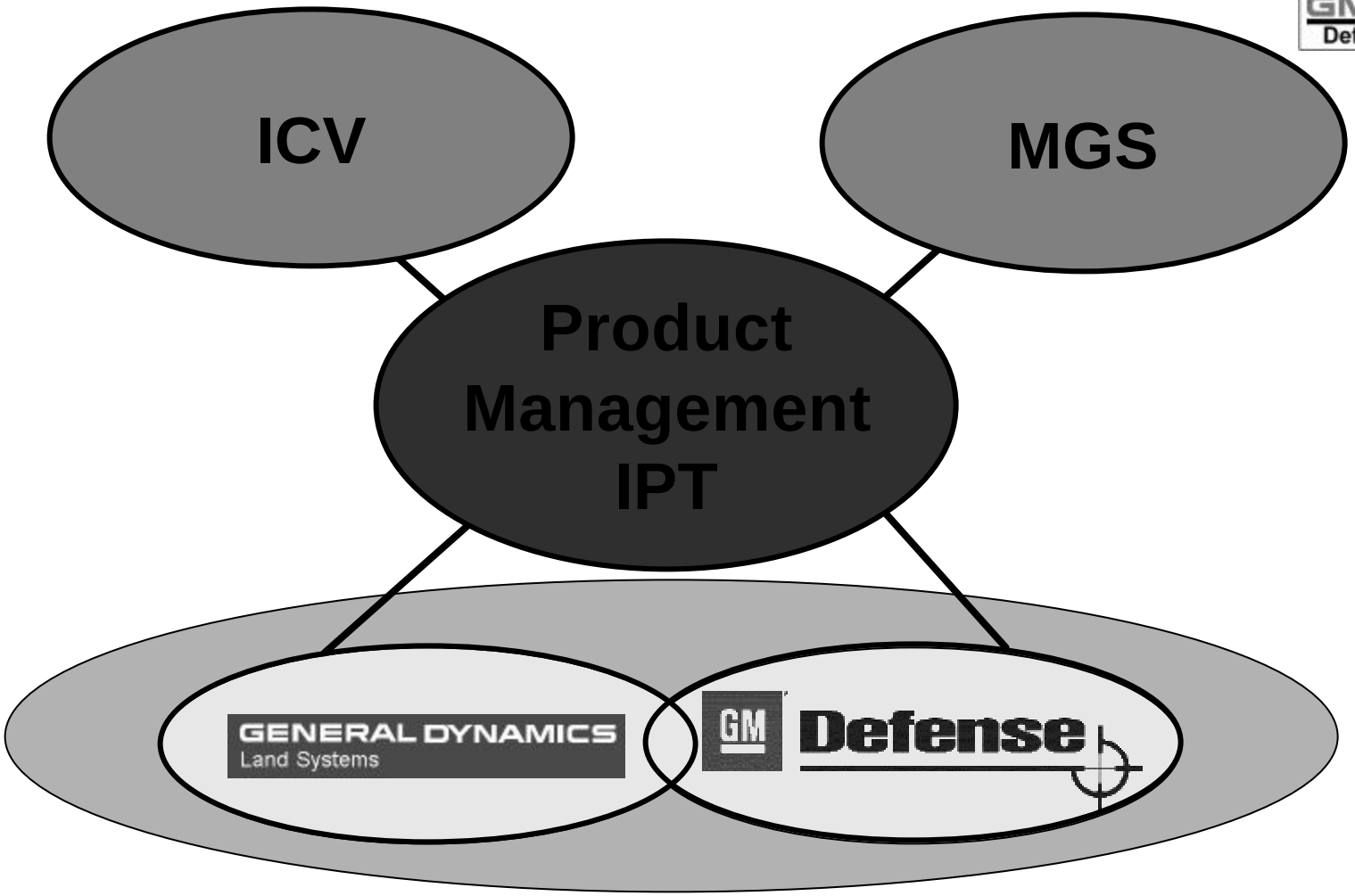

Vanguard For Army Transformation

PM BCT

User Involvement

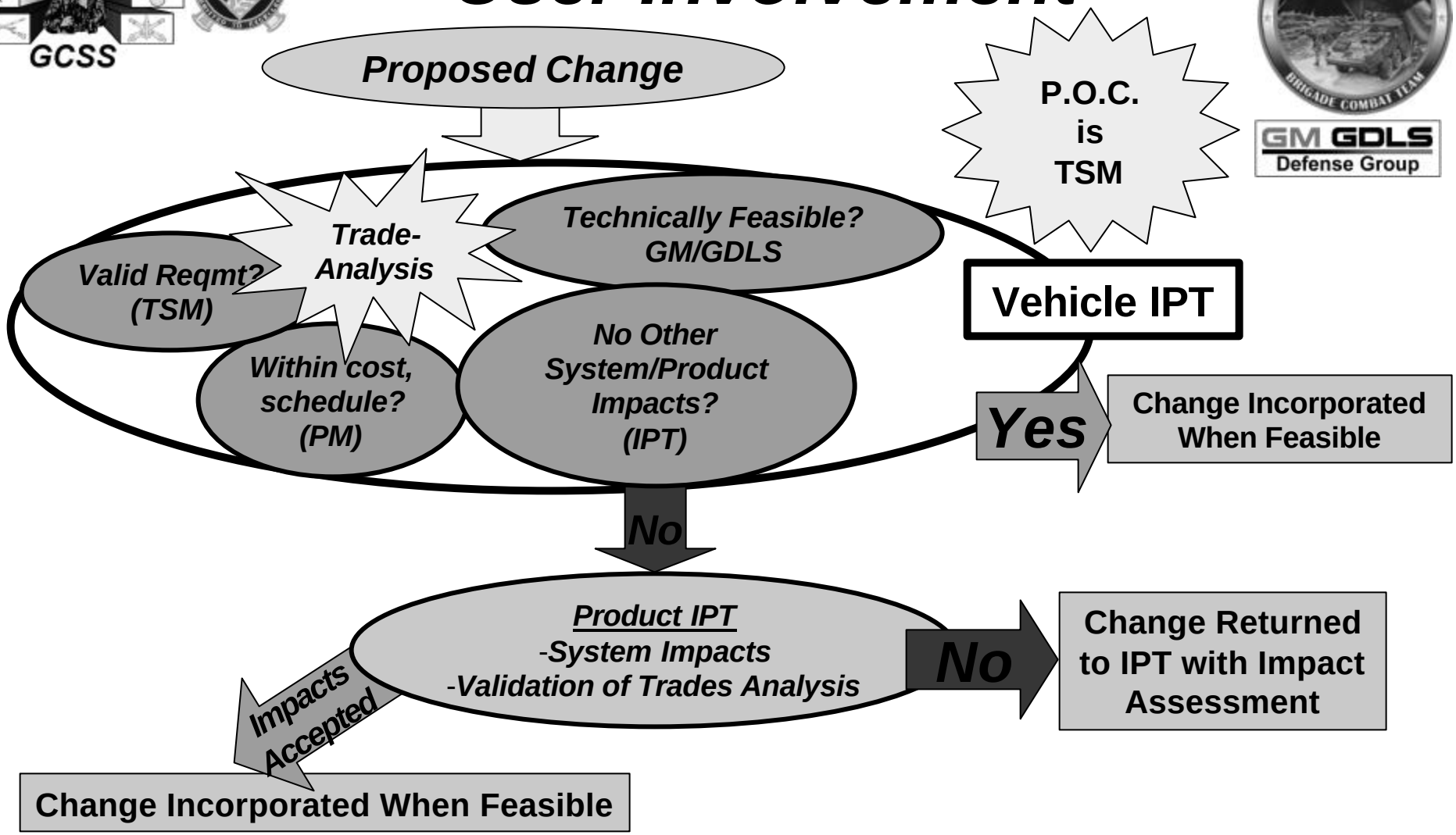

User Input Required to Ensure Vehicles are Suitable and Effective

The Interim Armored Vehicle Family

Infantry Carrier Vehicle (ICV)

- 8x8 Wheeled w/CTIS & Run Flat
- High Hard Steel Structure
- Remote Weapon Station with cal .50 MG or MK19 40mm

Mobile Gun System (MGS)

- Low Profile Turret
- M68A1 Cannon w/Autoloader
- Full Solution Fire Control

Brigade Configuration

	Qty Ea Bde	ORF	TDA	TOTAL
ICV	108	6	30	714
ATGM	9	1	15	75
MORTAR	36	2	13	241
RECON	48	3	12	318
FIRE SUPPORT	13	1	15	99
ENGR SQ VEH	9	1	13	73
CDR'S VEH	39	1	12	252
MED EVAC	17	1	10	118
NBC RECON	3	1	13	37
MGS	27	4	18	204
	309	21	151	
IBCTs	x6	x6		
TOTAL IAV	1854	126	151	2131

Integrated Program Summary

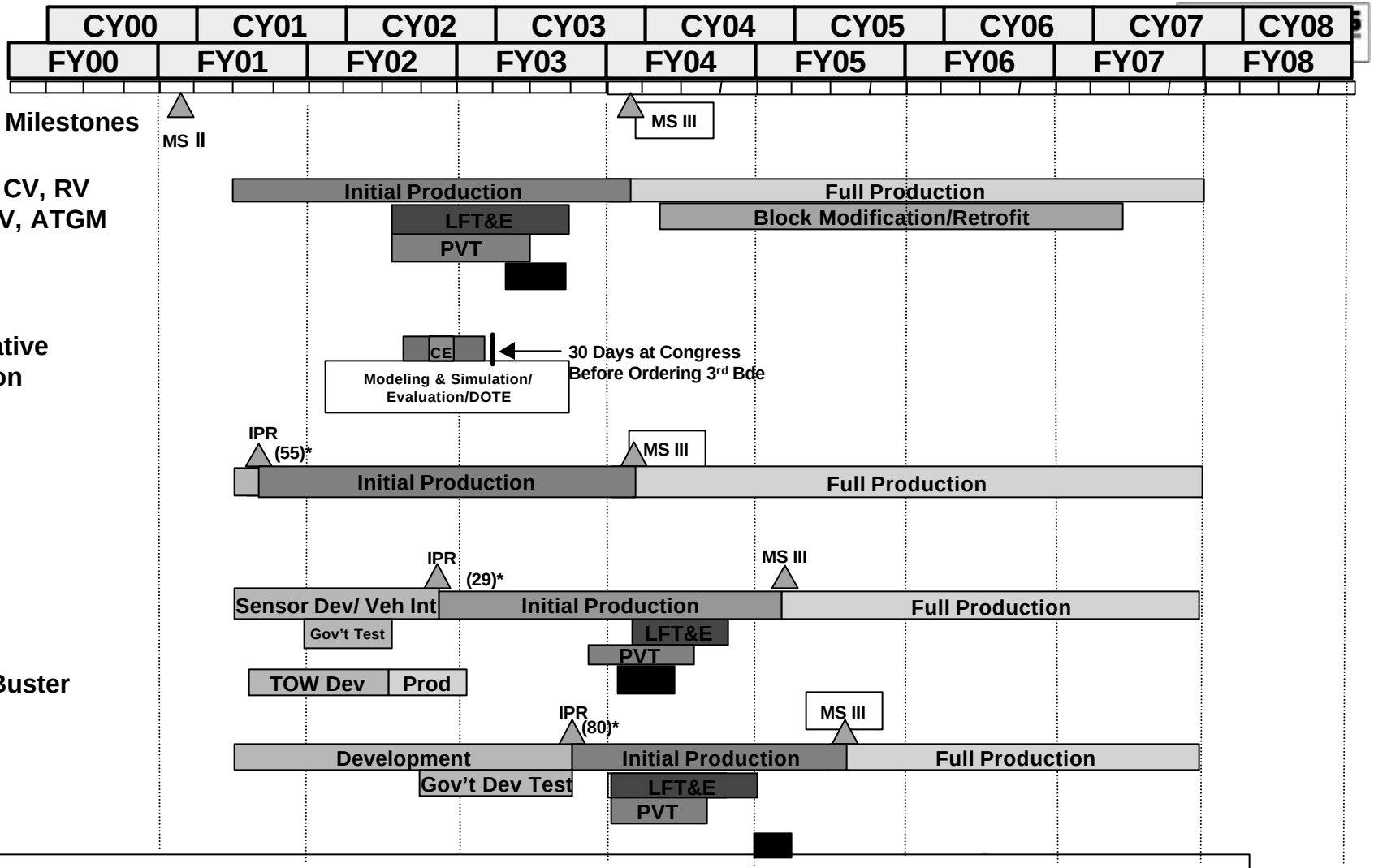

Design to Delivery

10 Months

User Requirements

Request for Proposal

Award Contract

1st Vehicle Delivery

We Are Here

Vanguard For Army Transformation

PM BCT

Interim Armored Vehicle (IAV) Virtual Environment

Contractor

System Design & Integration
3-D CAD representation
Design Tradeoffs
Stowage & HFE

Ground Truth
Man-In-The-loop Simulators
Test Design

Motion Base Dynamics
HFE
Design Tradeoffs
User Jury
Block Improvements

Virtual Proving Ground

Evaluations in CAVE

User Representation
HFE
User jury
Stowage
Usability

FT. LEWIS
FT. SILL
FT. SAM HOUSTON
FT. BENNING
FT. KNOX
TSM IAV

Imersive Environments
Design Tradeoffs
Design Reviews
Block Modifications

BCT System Integration Lab (SIL)

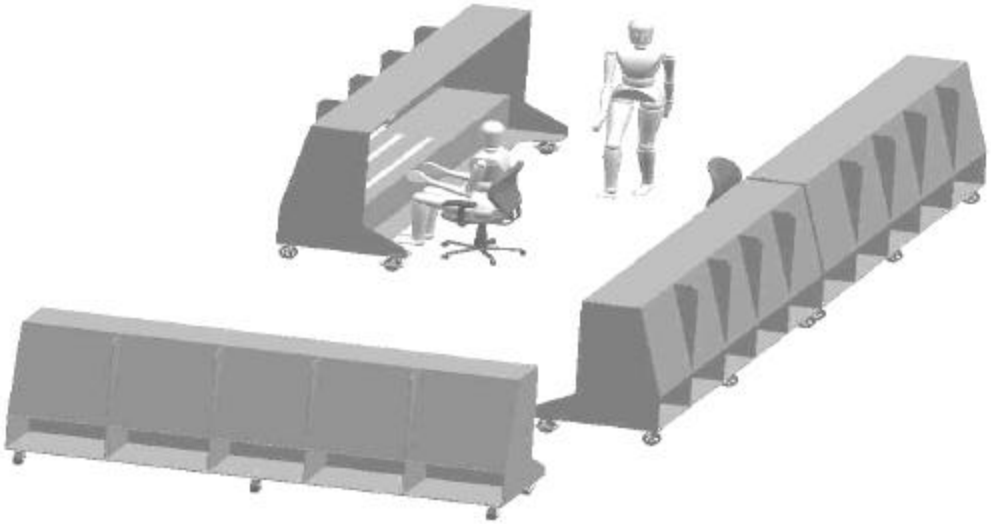

Utilization

C4ISR subsystem Interoperability
Human factors (HFE)
Training
Documentation (manuals, operator guides)
Networking (USG, GM GDLS, Subcontractors, 24/7)

Features

Mobile
Configure for bench testing
Rapid variant reconfiguration
Full scale environment

Fielding at Ft Lewis
- Force Modernization Process-

•ID Requirement TOE (TRADOC)
•ID Shortages (I Corp/FORSCOM)

ALL PARTIES:
Maintain Visibility
Over Entire Process

Synchronize Fielding (Materiel Directorate-BCC)
* ID fielding window with BDE
* Synchronize PM
* Inform Materiel Developer

(Facilitate / De-conflict)

BATTLE H/O

Execute Fielding (Materiel Developer/PM)
* De-process
* Conduct NET
* Field (hand off & support through NET)
* Hand off TPF packages

Coordinate W/Unit (Force Mod/G-7)
* Close coordination W/Unit
* Set up NMIB (G7)
* Coordinate for Resources (G3)

Vanguard For Army Transformation

PM BCT

IAV Supportability & Training Objectives

Supply	Maintenance	Training
Use Established Sources for Existing NSNs CLS for Supply of New NSNs IAW Performance Parameters	Organic Field Level Maintenance with Contractor Field Service Rep Assistance CLS for Repair of New LRUs	Instructor & Key Personnel Training New Equipment Training and Institutional Training Training Aids and Devices Interface

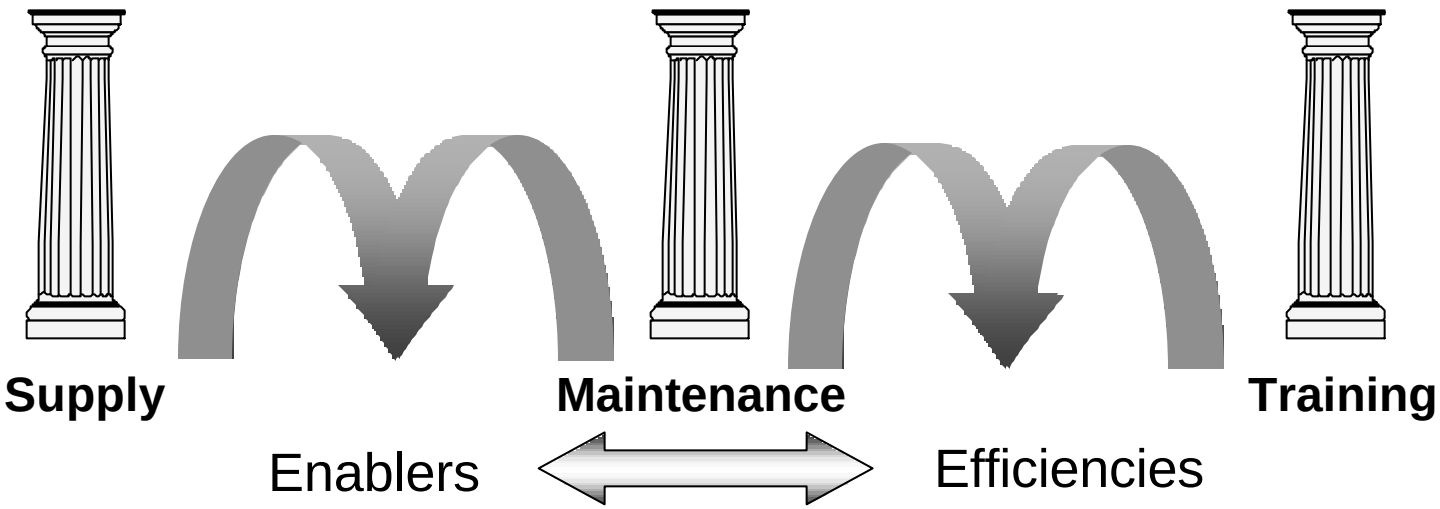

Vanguard For Army Transformation

PM BCT

IAV Common & Integrated Capabilities

Commonality

•Interoperable with ABCS (KPP)
•C-130 Transportable (KPP)
•IAV Maximum Commonality at System, Subsystem, TMDE, Parts, Tools, Skills And Tasks

Infantry Carrier Vehicle

•Transports 9-man Infantry Squad + 2-man Crew (KPP)

Commander's Vehicle

•Provides Commander's C2 Connectivity

ATGM Vehicle

•TOW 2B Anti-Tank Capability Under Armor

Reconnaissance Vehicle

•LRAS3 Target Acquisition
• Surveillance for the BDE

Mortar Carrier

•Dismounted M121 120mm MRT Initially
•Soltam 120mm Recoil MRT Block Mod

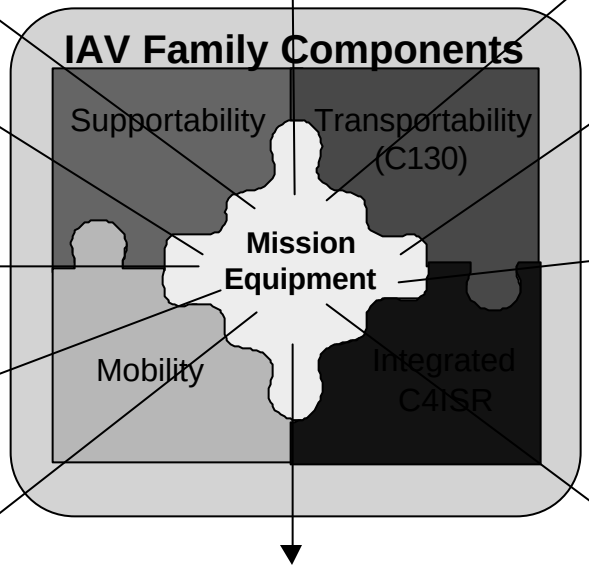

NBC Reconnaissance Vehicle

•Detection of NBC Hazards

Fire Support Vehicle

•Striker - Coordinated Fire Support Planning and Execution

Medical Evacuation Vehicle

•4 Litter Evacuation Capability

Engineer Squad Vehicle

•Transports Engineer Squad & Equipment +2-man Crew
•Mine Neutralization Kit

Mobile Gun System

•Bunker Busting Capability (KPP)
•Penetrate Reinforced Concrete Wall to Allow Infantry Access
•Provides Direct Fire Support to Dismounted Infantry

Bottom Line: ***Mission Equipment Packages Make The Variants Unique***

Vanguard For Army Transformation

PM BCT

Technical Characteristics
Infantry Carrier Vehicle

Supportability

Embedded IETMs Block Improvement

Diagnostics Linked To VDT

BIT/ Power Pack Display

Mission Capability

Carries 9 Man Infantry Squad And Crew of 2

Kongsberg Remote Weapon Station With M2 .50 cal MG Or MK19 40mm

2000 rnds .50 Cal or

448 rnds 40mm

2 Javelin Missiles

Survivability

14.5 mm AP Protection

High Hard Steel Structure

MEXAS Ceramic Layer

Spall Liner

IBD Passive RPG Add-on

Transportability

37,798 lbs Combat Weight

37,618 lbs Transport Weight

50% Fuel

200 Rnds .50 Cal

32 Rnds 40mm

All remaining Ammo Restowed

Crew/Squad Gear Restowed

Mobility

60 MPH Top Speed

9 Sec 50m Dash

78 in Gap Crossing

23 in Vertical Climb

330 Mile Cruising Range est.

53 Gal Fuel Capacity

IAV Common GFE/ASIOE

FBCB2

EPLRS

GPS

TWS-H

Infantry Carrier Variant

ICV Serves as the Baseline Vehicle (Enhanced Commonality)

Key Performance Parameters

- 9-Man Squad with their Equipment
- C-130 Air Transportable
- System Interoperability

Automotive

- Sprint Capability - 50 meters in 9 seconds
- Sustained Maximum Speed > 60mph
- Cruise at 40mph for 330+ miles
- 4WD Selectable 8WD
- 2 Speed Transfer Case
- Hydro Pneumatic Suspension
- Height Management System
- Air Transport
- Load Leveling

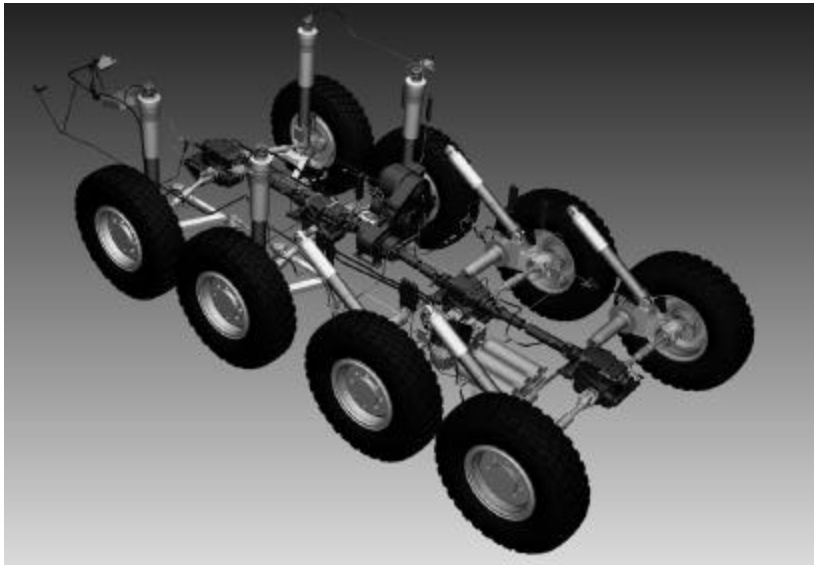

Power Train

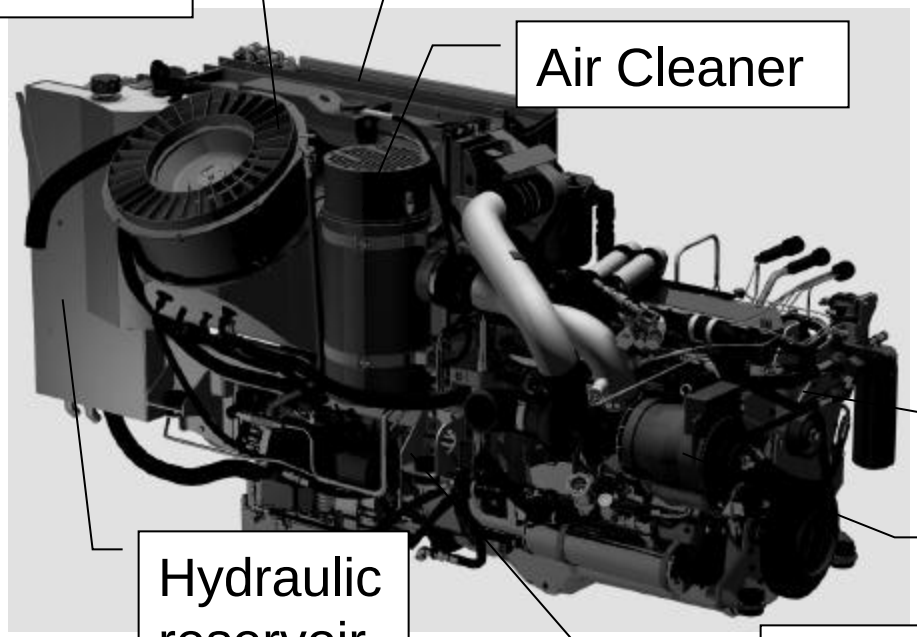

Caterpillar 3126 engine

- 350 hp @ 2600 rpm
- 820 ft lbs @ 1440 rpm

Allison MD3066P Transmission

- 6 speeds fwd
- 1 speed reverse
- 2 x PTO driving hydraulic accessories

Armament

Remote Weapon System

- KDA Remote Weapon Station
  - M2 .50 cal
  - Mk19 mod 3 40mm
- Defeat light armored targets at 1500m
- -20º depression to + 60º elevation
- Targets acquired and engaged from under armor

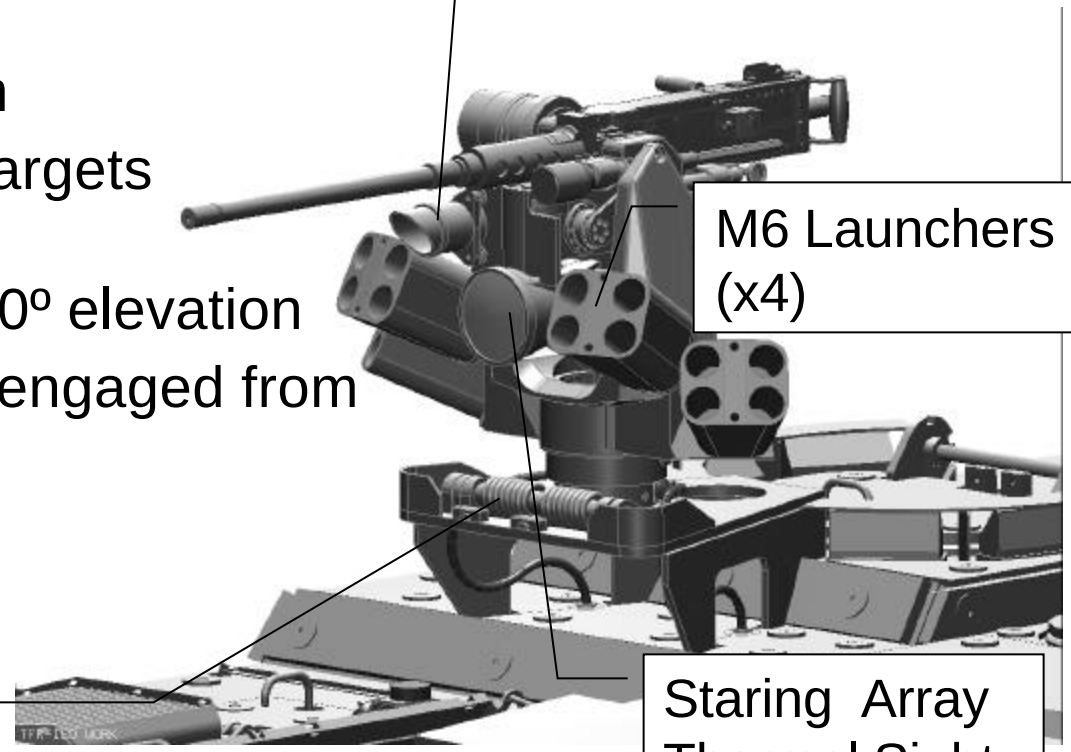

Armament

Mortar Carrier

MORTAR CARRIER (Initial)

- M121 120mm Dismounted Mortar
- 81mm Dismounted (Battalion)
- 60mm Dismounted (Company)
- Storage for Improved Munitions

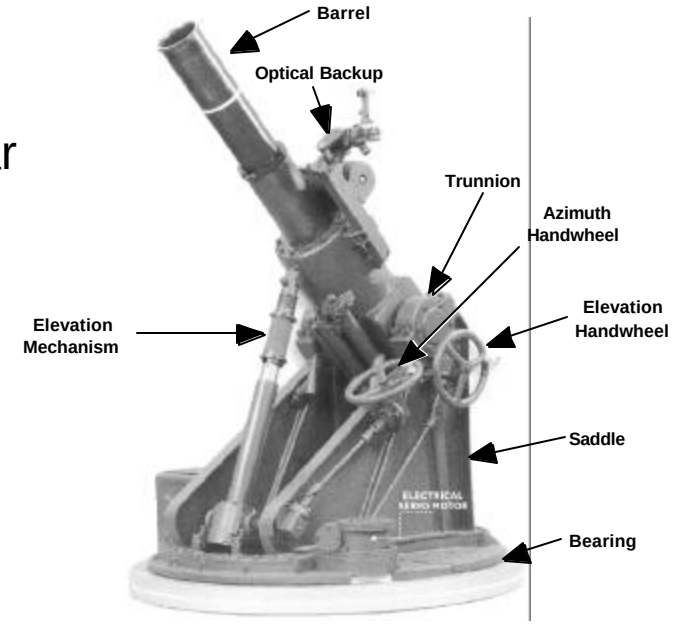

BCT-223

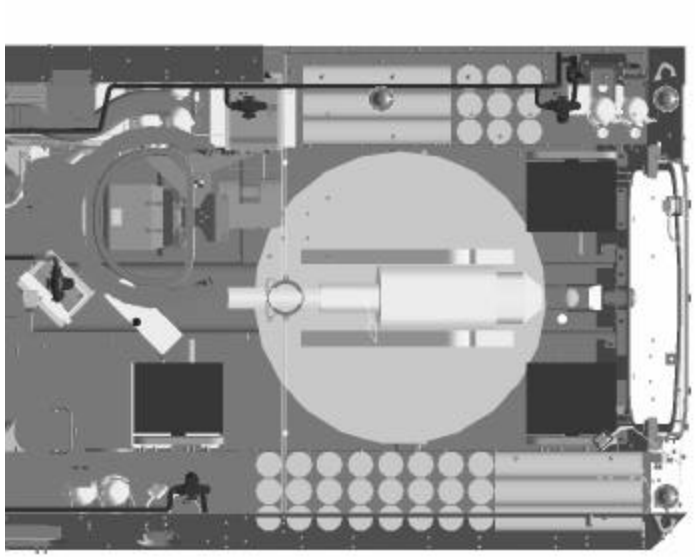

MORTAR CARRIER (Block Improvement)

- Soltam 120mm Recoil Mortar System
- 81mm Dismounted (Infantry Battalion Carrier)
- 60mm Dismounted (Infantry Company Carrier)
- XM95 Mortar Fire Control System
- Storage for Improved Munitions

Armament

Anti-Tank Guided Missile

ANTI-TANK GUIDED MISSILE VEHICLE

- TOWII
- ITAS (Raytheon) - 2 Missiles
- IBAS Day Camera
- Missile is Remotely Fired Under Armor
- M6 Smoke Grenade Launchers

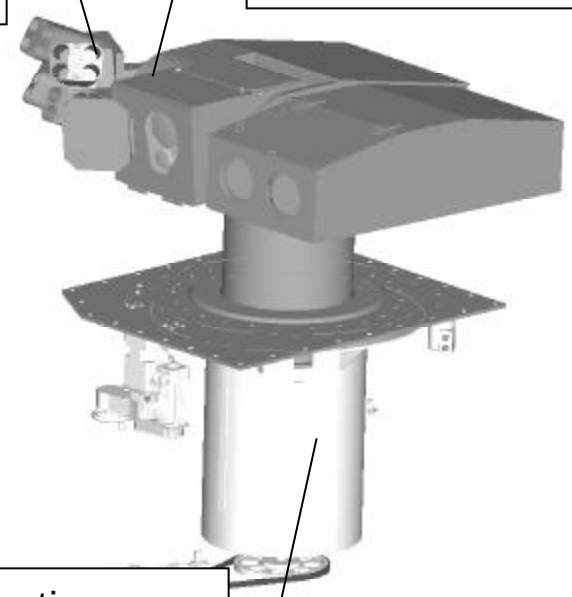

* ATGM does not incorporate the RWS

Situational Awareness

RECONNAISSANCE VEHICLE

- Integrated LRAS3

COMMANDER'S VEHICLE

- Full C4ISR Suite including workstations

FIRE SUPPORT VEHICLE

- Integrated M707 Striker
- Mounting position allows growth to Striker Sabre / masted system

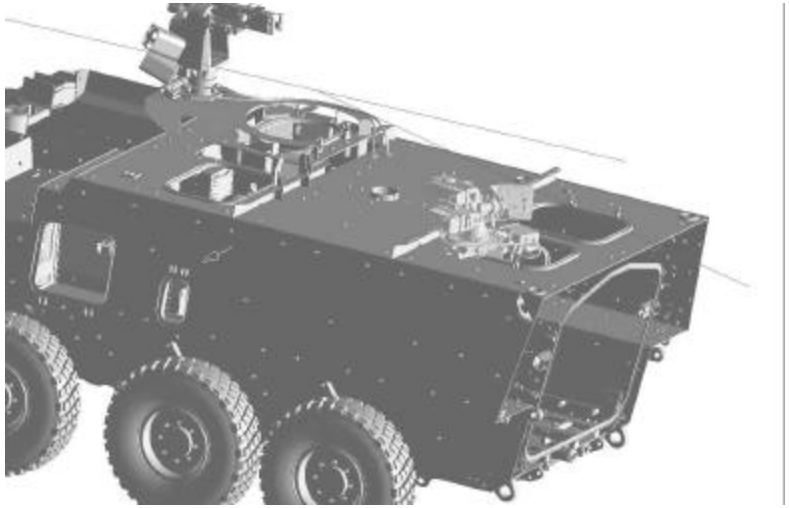

Support Elements

ENGINEER SUPPORT VEHICLE

- Vehicle Array Mine Detection System (VAMIDS)
- Tele-Operation, Mark IV Robotic System (Omnitech)
- Advanced Hornet System
- Obstacle Neutralization System
  - Magnetic Signature Duplicator
  - Pearson Surface Mine Plow
  - Light Weight Mine Roller
  - Lane Marking System
- M15/M21 Anti-tank Mines

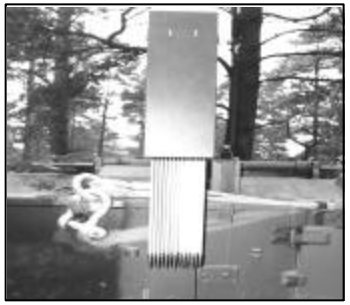

Support Elements

NBC RECONNAISSANCE VEHICLE

- Overpressure and Climate Control System
- Government Directed, CACI Developed Digital Suite and Sensors
- Lightweight Chemical Agent Detector and Display
- Radiation Detector(s) AN/VDR-2 and AN/VDR-13
- Autonomous Navigational Device

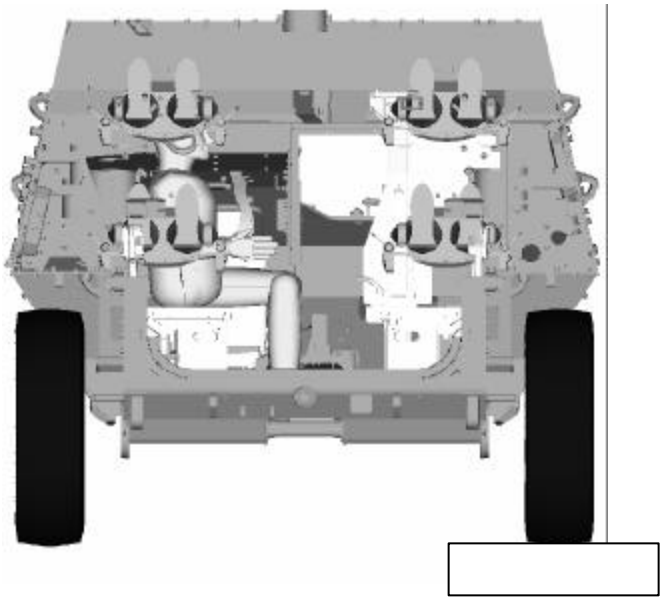

MEDICAL EVACUATION VEHICLE

- Litters for four patients
- Seating for six ambulatory patients

Technical Characteristics
Mobile Gun System

Supportability

IETMs on Video Display Terminal (VDT) For 3/2 ID and 1/25 ID

Embedded IETMs Block Improvement

Diagnostics Linked To VDT

BIT/BITE Power Pack Display

Mission Capability

Low Profile Turret

M68A1 Cannon w/Autoloader

Coax 7.62mm, Secondary CDR's MG

Full Solution Fire Control,

2 Axis Stabilization

18 rnds 105mm

4200 rnds 7.62mm

Survivability

14.5 mm AP Protection

High Hard Steel Structure

MEXAS Ceramic Layer

Kevlar Spall Liner

IBD Passive RPG Add-on

Transportability

41,300 lbs Combat Weight

38,000 lbs Transport Weight

25% Fuel

5 rnds 105mm

500 rnds 7.62mm

200 rnds .50 cal

All remaining Ammo Removed

Crew Gear Restowed

Winch Removed

Mobility

60 MPH Top Speed

9 Sec 50m Dash

78 in Gap Crossing

23 in Vertical Climb

330 Mile Cruising Range

53 Gal Fuel Capacity

MGS Specific GFE/ASIOE

M68A1

ELRF

Mobile Gun System Variant

- Low Profile Turret
  - External Modified M68 105mm gun
  - Protected 8 round autoloader
  - Versatile lethality with growth
  - Stabilized direct fire control
  - Low profile, side-by-side crew
- ICV Variant Chassis
  - Modified production chassis
  - Lowered for C130/survivability
  - Isolated 10 round replenisher low in back
- MGS Vehicle
  - 18 auto loaded rounds
  - 3 crew
  - GVW/performance ~same as ICV
  - LPT on LAV III demonstrated performance

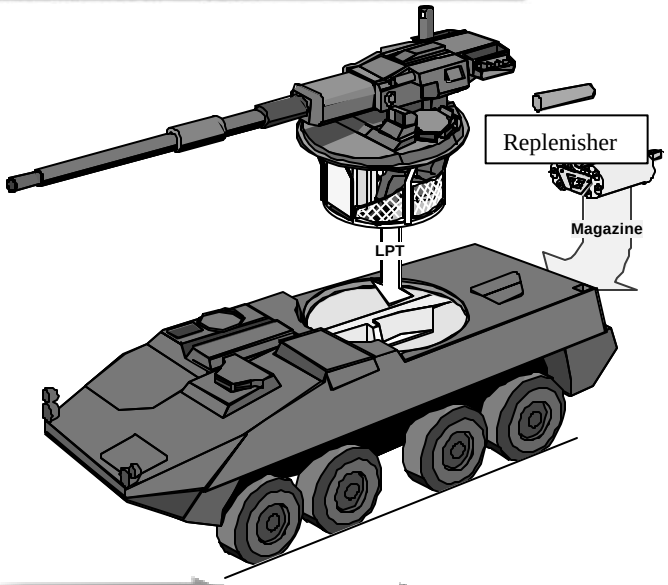

MGS LPT Weapon Lethality

- M68A1 105mm cannon with muzzle brake
- Fires all NATO ammo present and future
- 8-round autoloader, 10 rds/min
- 10-round replenisher with manual bypass
- All ammo protected by spall liners

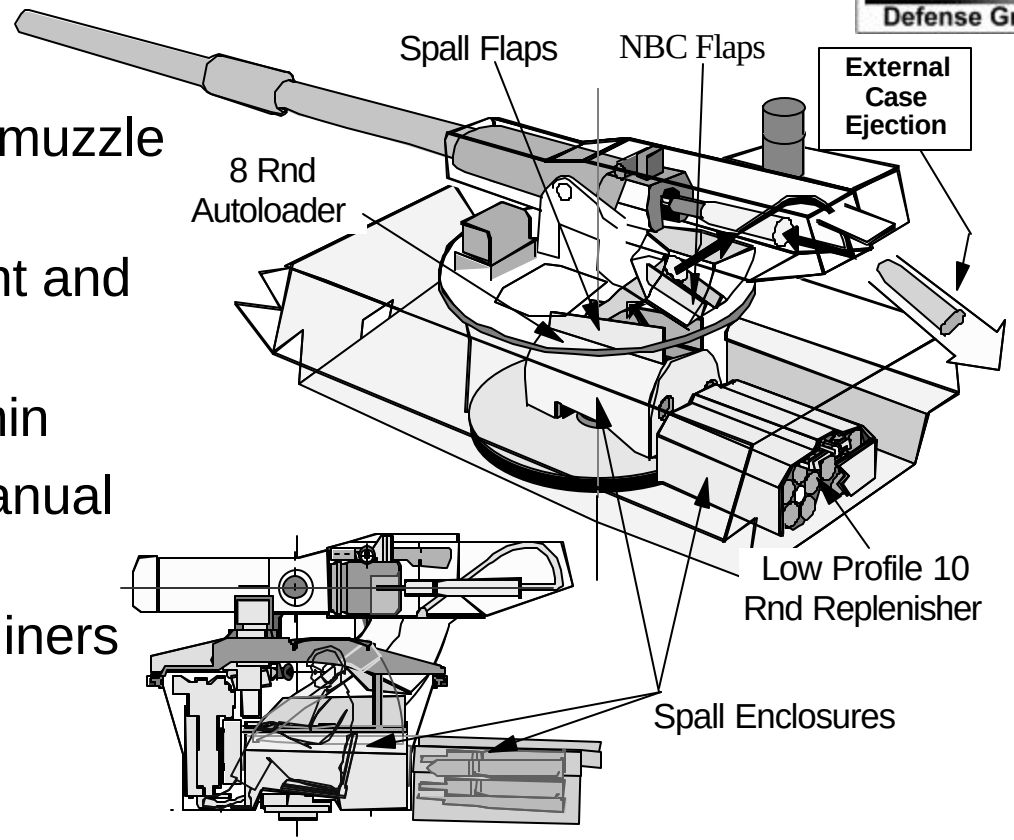

Fully Automated, Protected, MBT Firepower

MGS LPT Fire Control

- 2 axis stabilized gunner's sight
  - Latest thermal technology
  - 2 power viewing
  - Eye safe laser range finder
  - Muzzle reference sensor
- Turret and gun stabilized
- 7x auxiliary sight
  - Available to both crewmen
- Panoramic viewer
  - Mounts high on gun pod
  - Day video and thermal

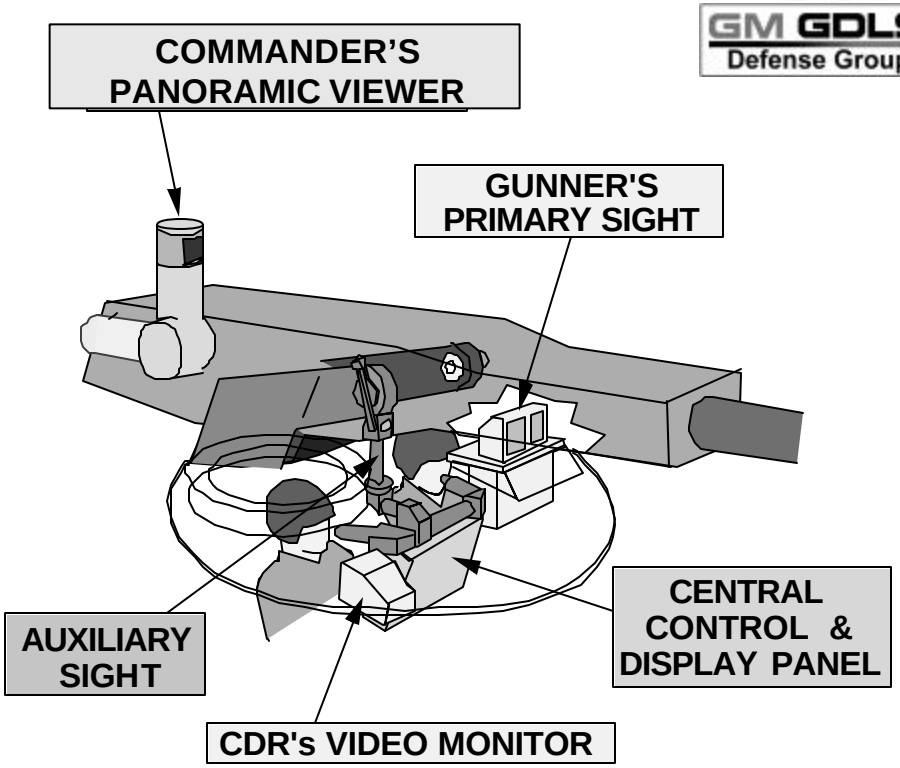

State-Of-The-Art Fire Control

GM GDLS
Defense Group

END OF PRESENTATION