Crusader … It's Not Your Dad's Combat Vehicle

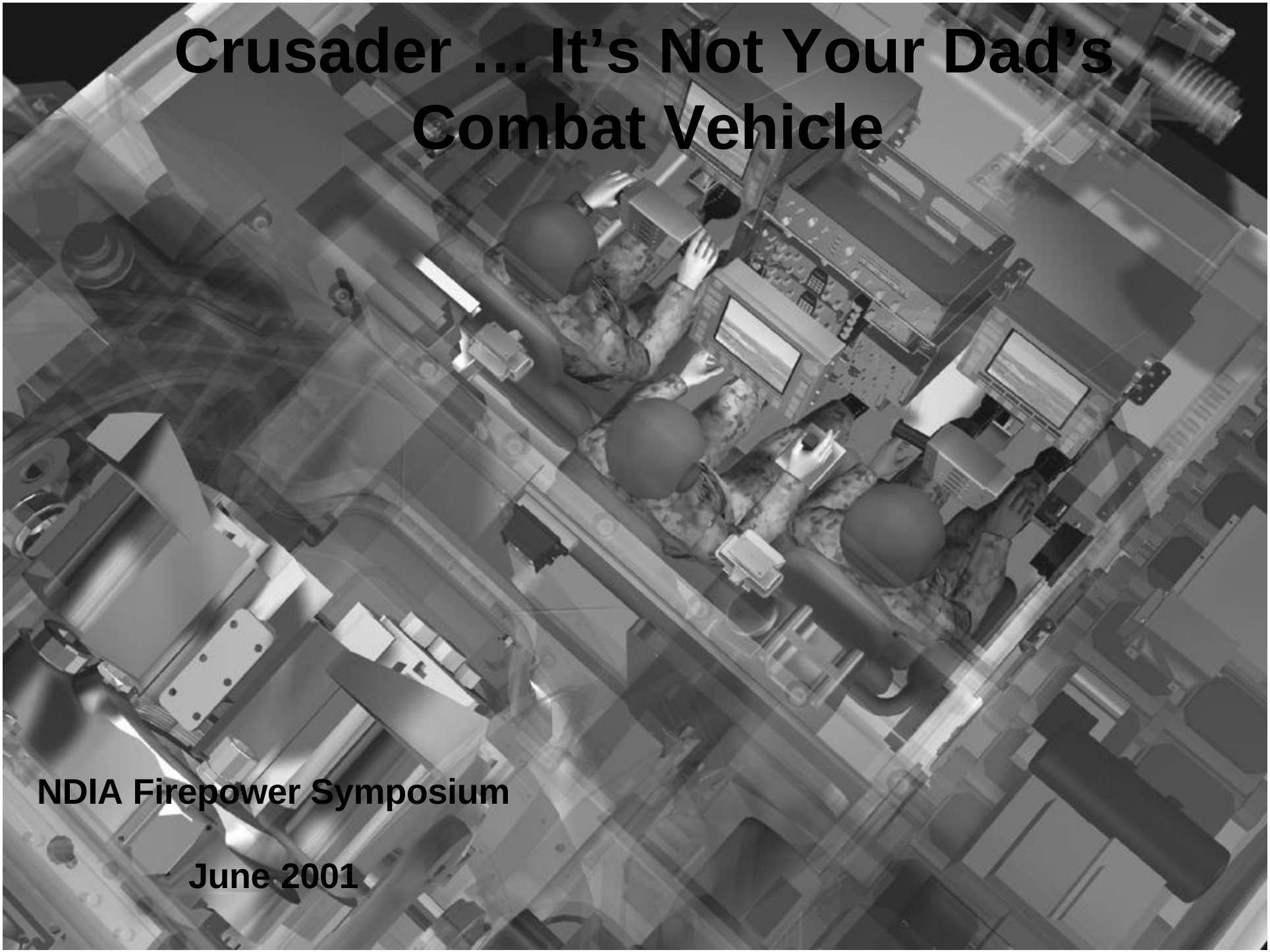

NDIA Firepower Symposium

June 2001

World Changed … Army Transforming

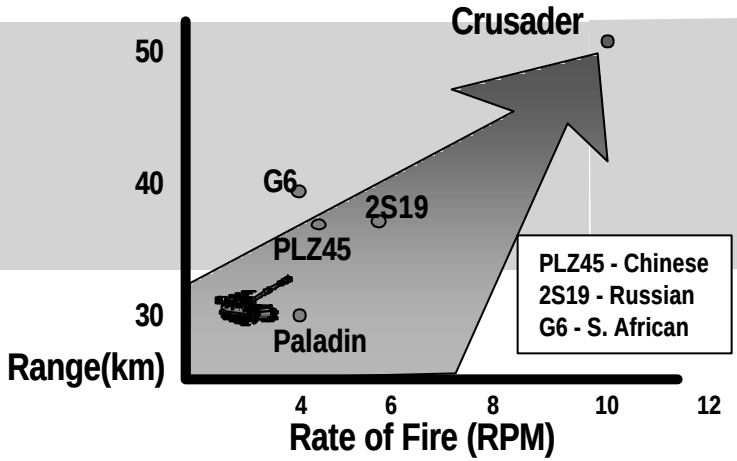

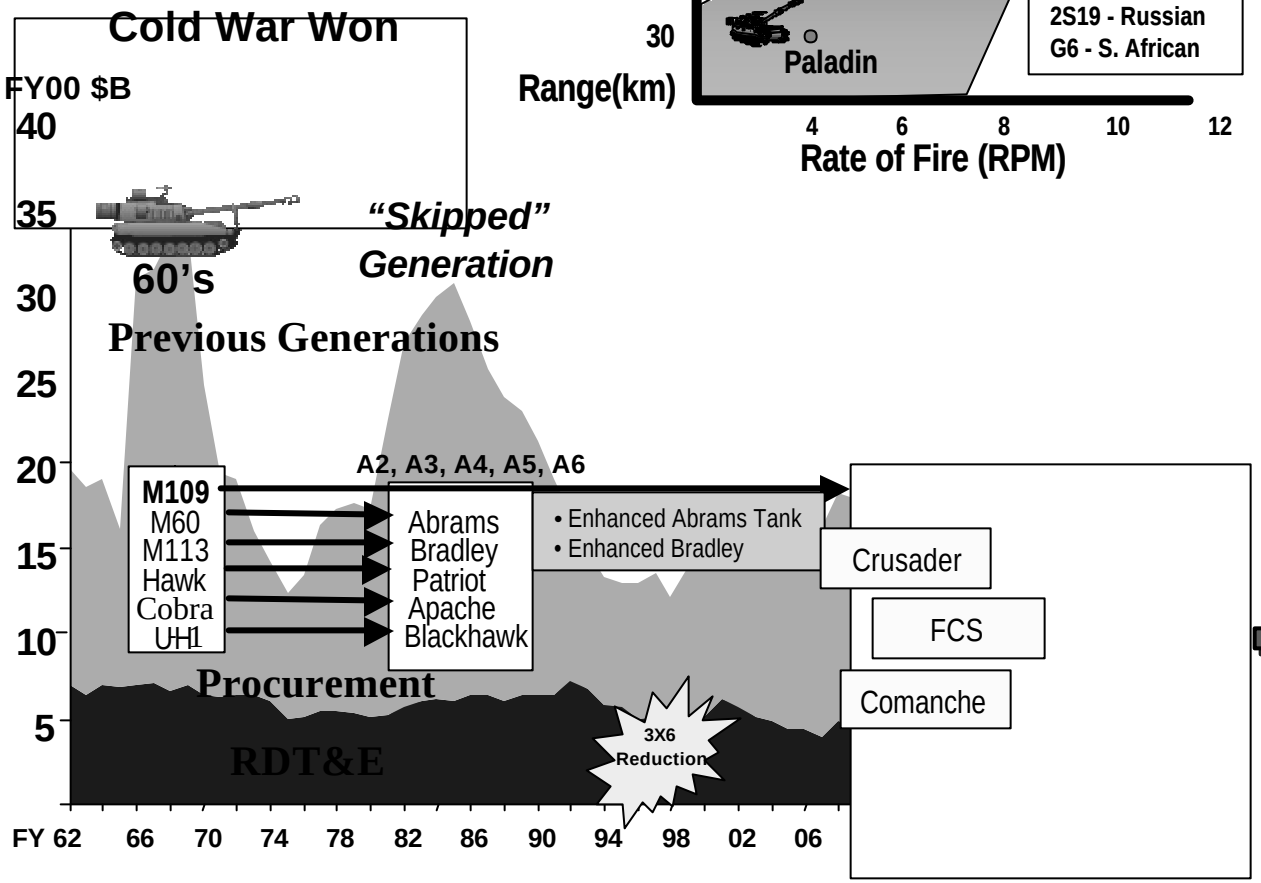

Technology & World Changing

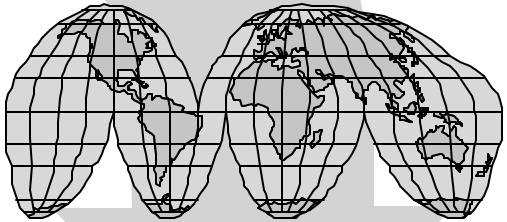

- Revolution in Military Affairs
- Regional Instability
- Threat Sophistication

Army Transformation

Transformation In Design

60 Ton Howitzer

Suspension System

Mobility (7.0 Tons)

LV100-5

Abrams-Crusader Common Engine

2000

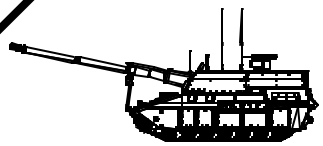

Structure & Materials (9.1 Tons)

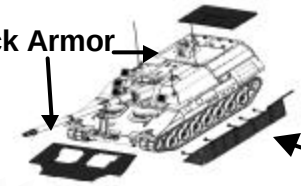

Protection by Kits (3.9 Tons)

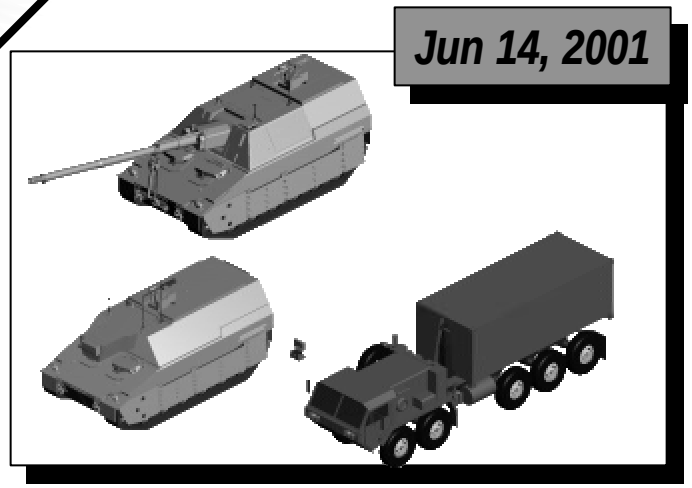

40 Ton Howitzer

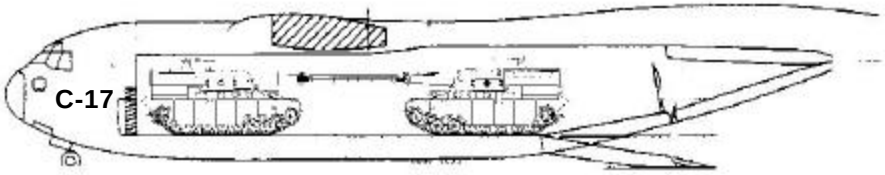

Doubled Strategic Mobility

Requirements Provide . . .

Howitzer

Unprecedented Attack System

State of the Art Cockpit

Track Resupply

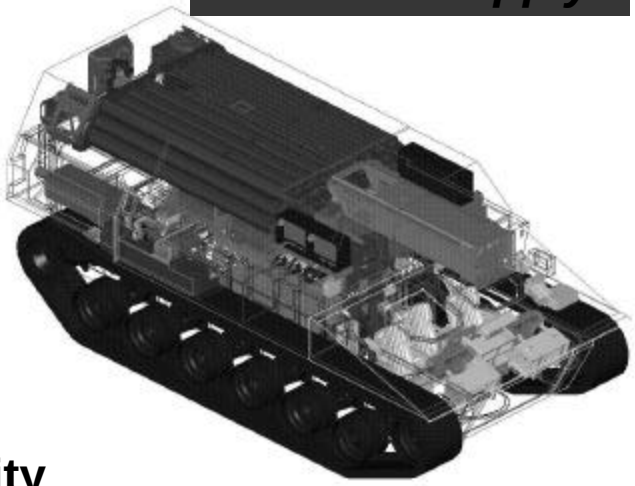

Unmatched Soldier/System Survivability

Wheel Resupply

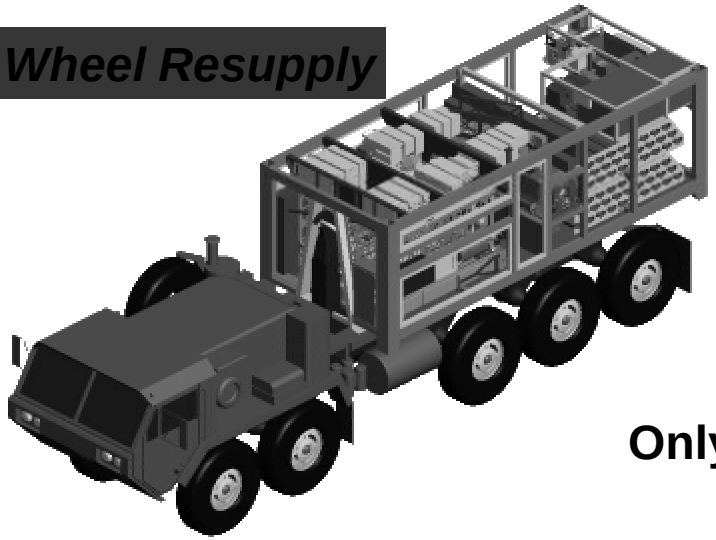

Unparalleled Mobility

Only Robotic Firing & Resupply Systems in the World

Why Crusader?

Point Man for Change

A Crusader Kills 48 Targets in 4 min Over 7850 Sq Km . . .

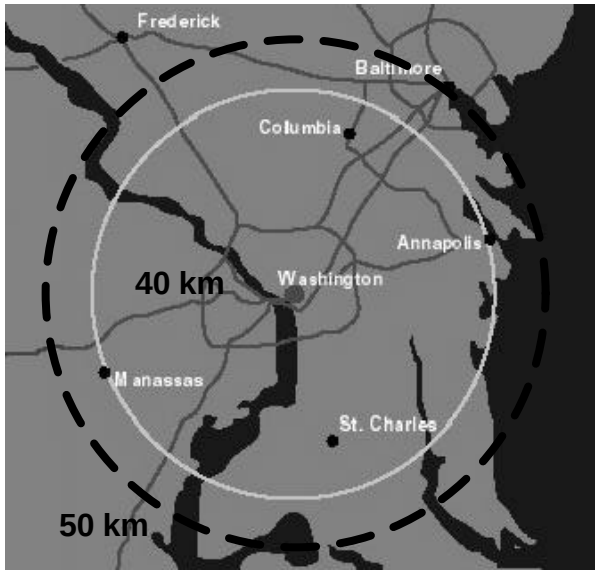

Crusader Firing Excalibur

- **Precision Strike .. 50+ KM**
- **178% + Area Coverage**
- **Redskins to Ravens Reach**

Current FA Employment

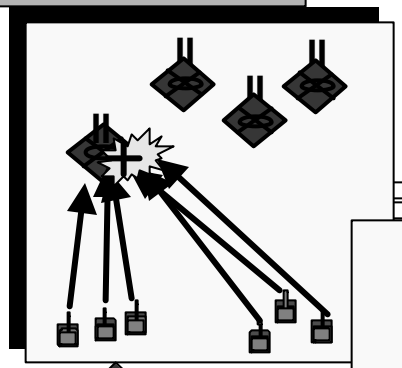

Multi-Target Engagements

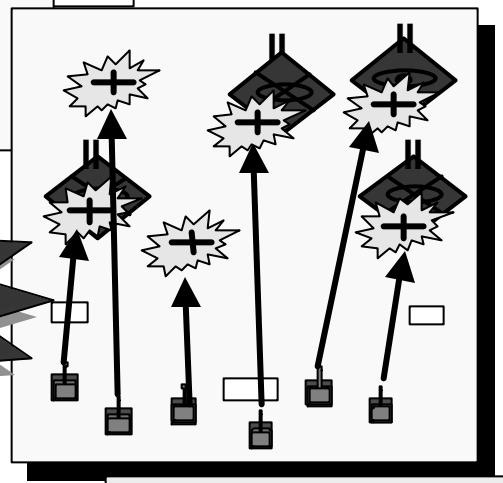

18 Guns, 216 Targets, 1 Minute

Sensor To Shooter

One Minute from Request to Effects

Force Augmentation

Albania 1999

TF HAWK ARTILLERY PACKAGE (A/4-27 FA)

- 6 Paladins
- 94 Soldiers
- 12 C-17 Sorties (8 C-5 Sorties)

CRUSADER ARTILLERY PACKAGE

- 2 Crusaders
- 31 Soldiers
- *6 C-17 Sorties (4 C-5 Sorties)*

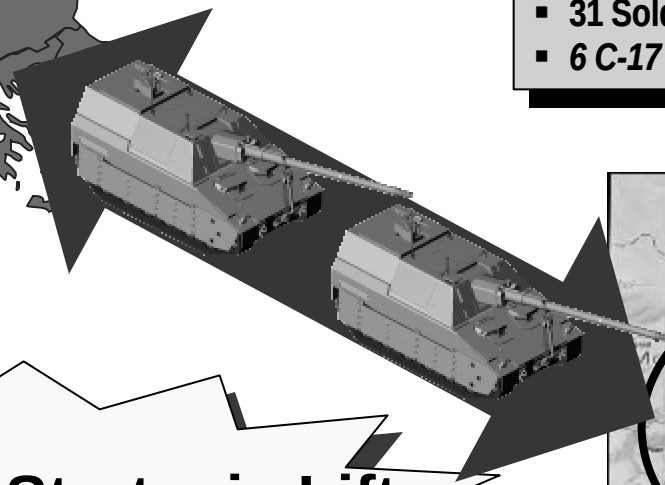

4 Crusaders Cover Kosovo

Asymmetrical Environment

- **50% Less Strategic Lift**
- **Smaller Logistical Tail**
- **Greater Firepower**

Fire Mission Sequence (1)

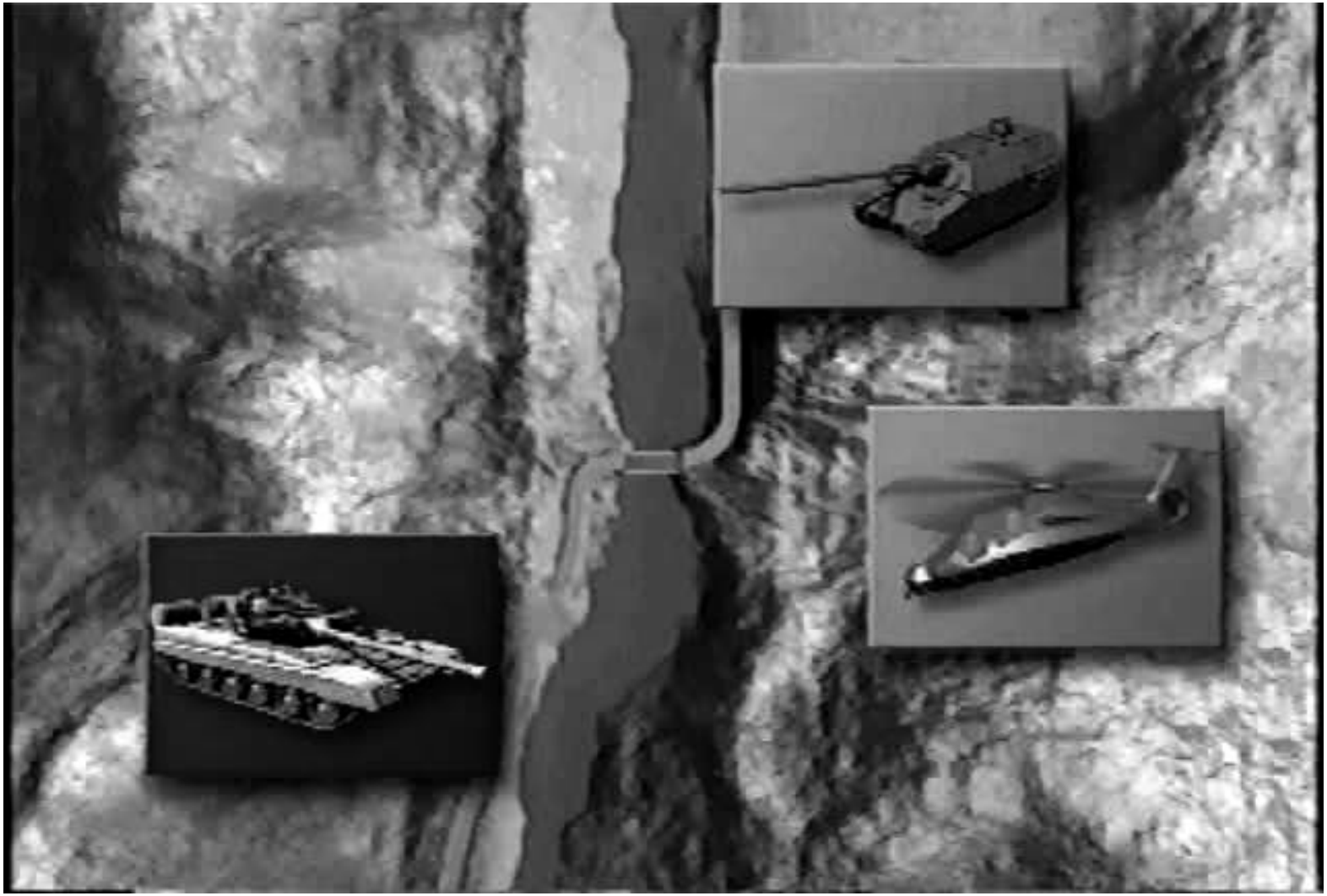

Resupply Sequence

First Installment of the Objective Force

Small Scale Contingencies

Major Theater Of War

Strategic Hedge for the World's Premiere Armored Corps

- Provides 24 Hr All Weather Fires
- Immediately Available, Never Off Station
- Fires Available in Seconds
- Supports Offensive Operations
- Provides Fires for Total Force

Firepower Augmentation for the Interim Force

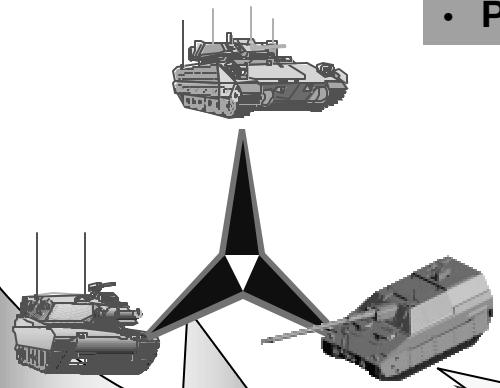

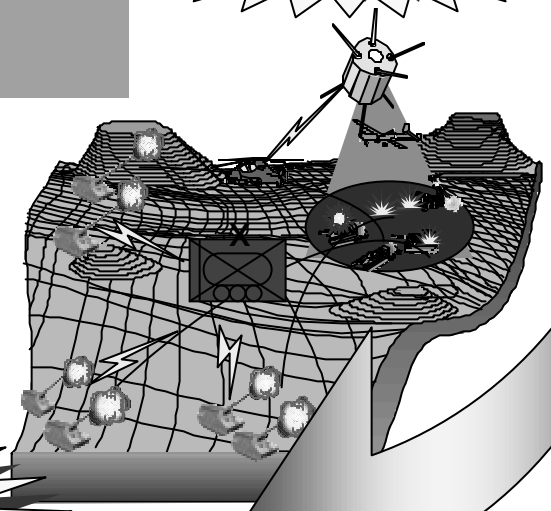

Leads Development of Objective Force

Design to Objective …

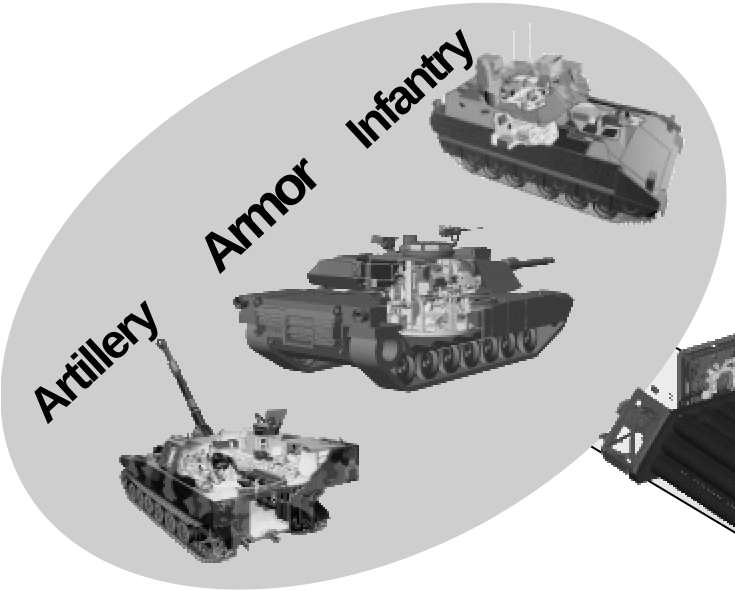

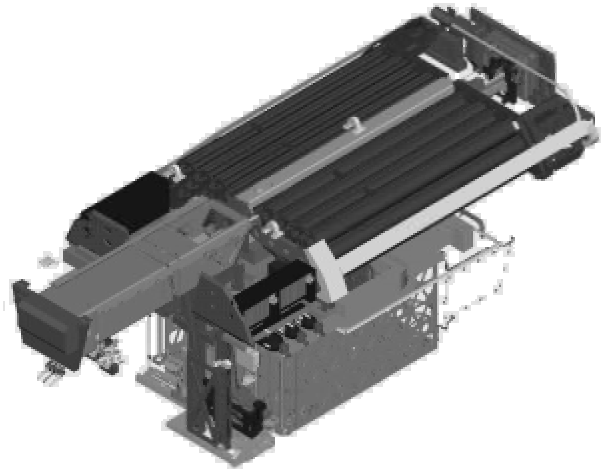

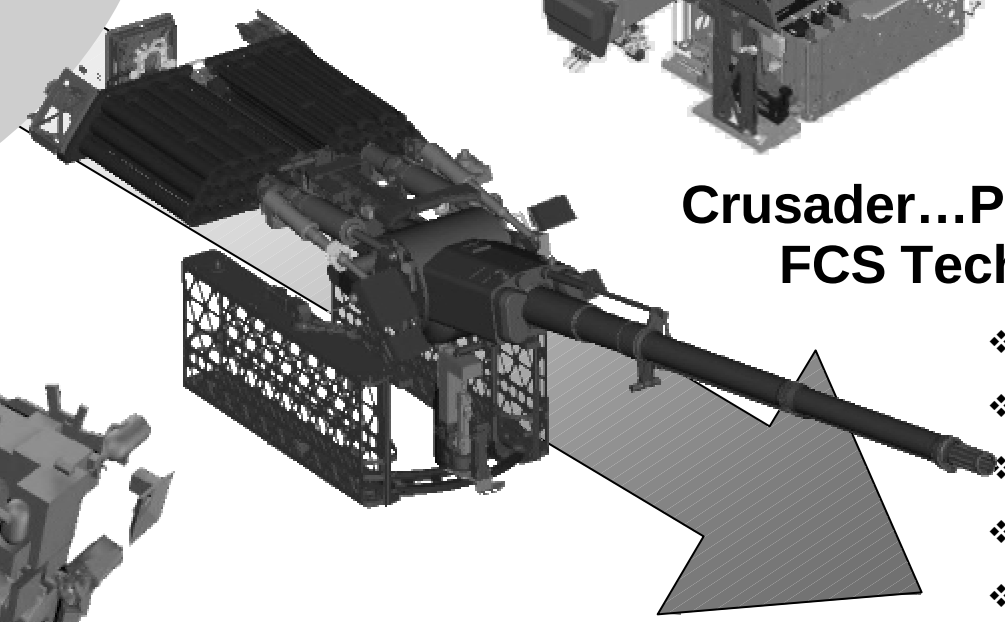

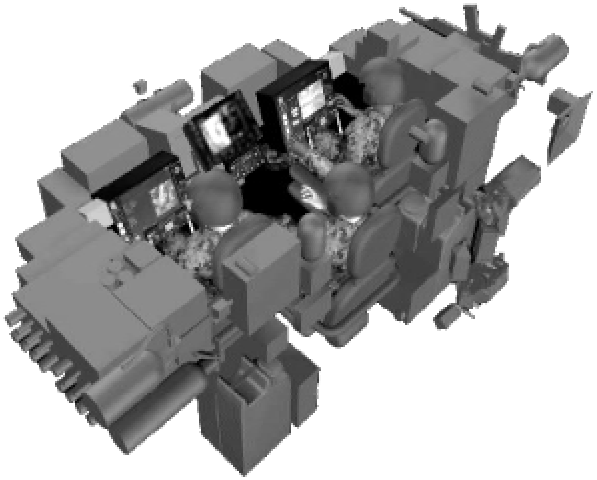

Crusader…Pathfinder for FCS Technology

- Lethality
- Electrical
- Robotics
- Cockpit
- Mobility
- C4ISR
- Resupply
- Survivability

Beyond Boeing 777 Development Era ...

[redacted]

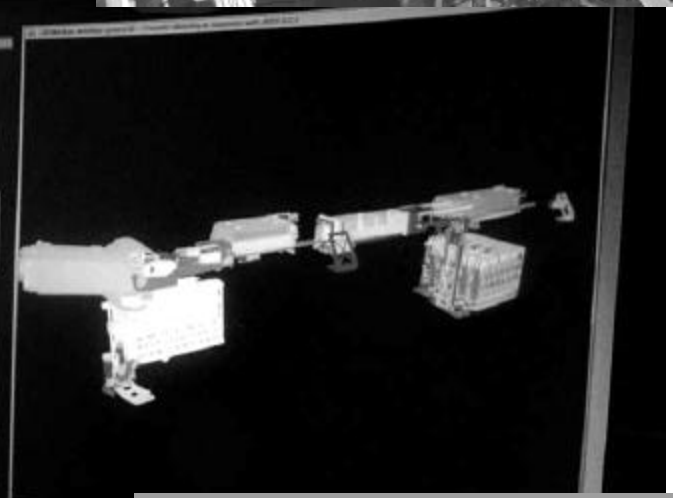

[redacted]

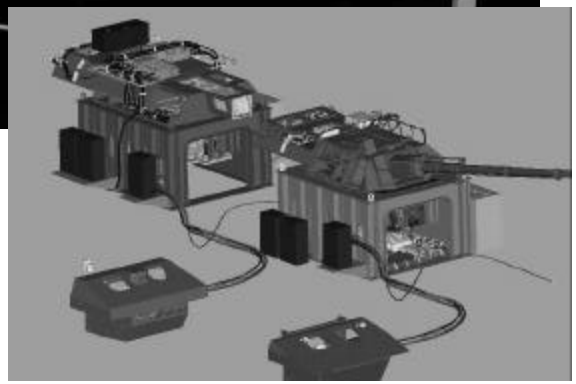

Crusader Leads Technology Integration

Integration of combat knowledge

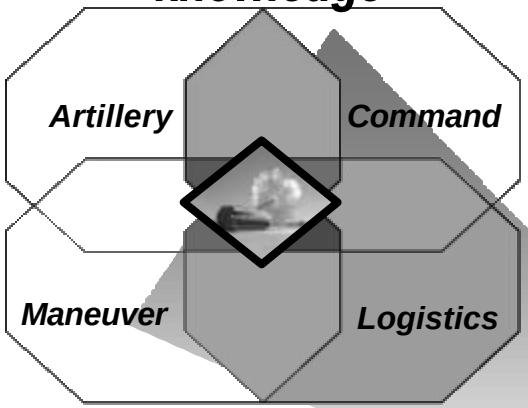

System of Systems Development

- **Tactical Decision Process**
- **Leader Development**
- **Soldier - Machine Interface**
- **Intellectual Capital**

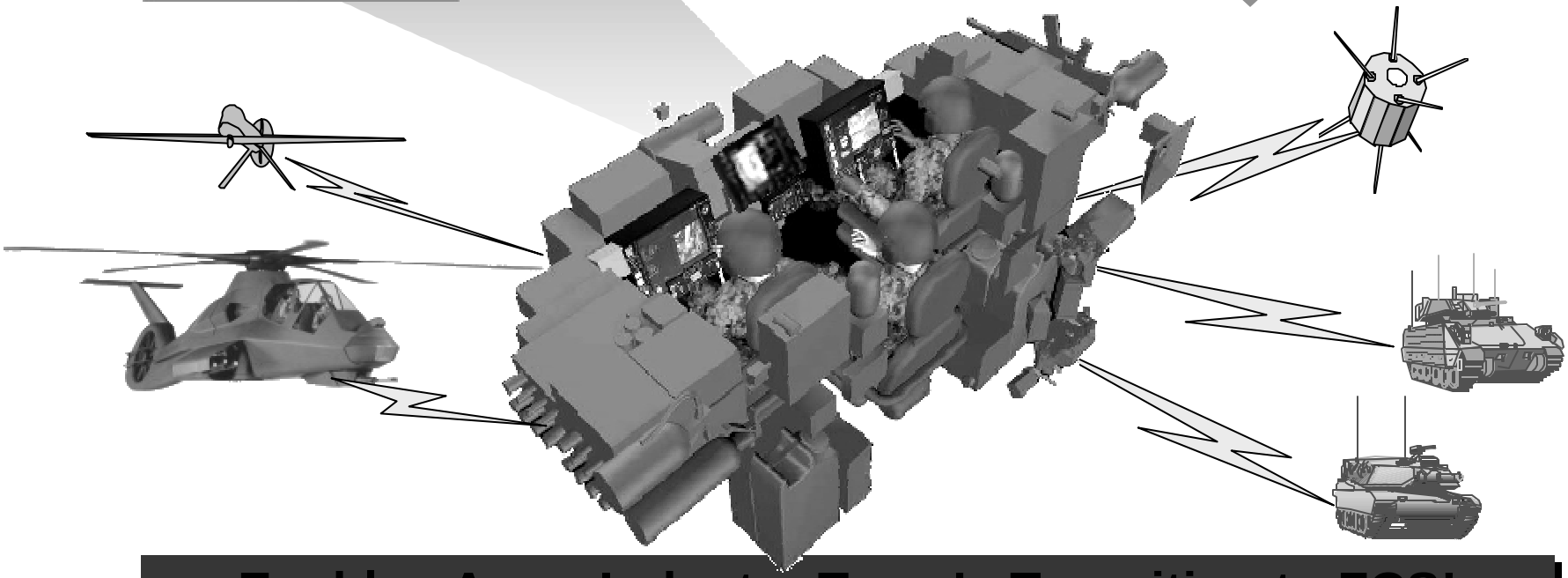

Enables Army-Industry Team's Transition to FCS!

Enabling Technologies for FCS

Logistics Revolution

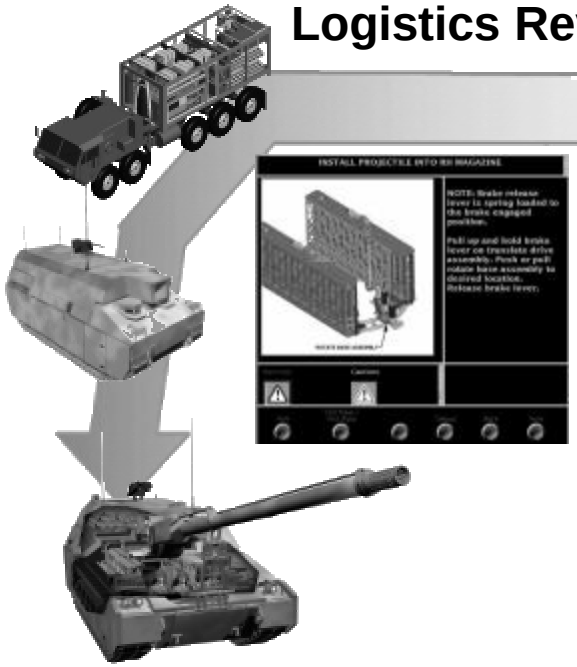

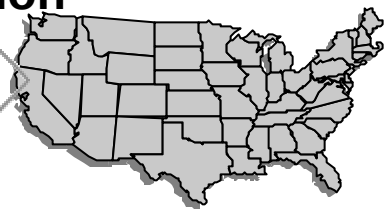

- Interactive Electronic Technical Manual (IETM)
- Robotic Fault Mgmt
- Log Situational Awareness
- Decision Aids

Evolutionary Propulsion

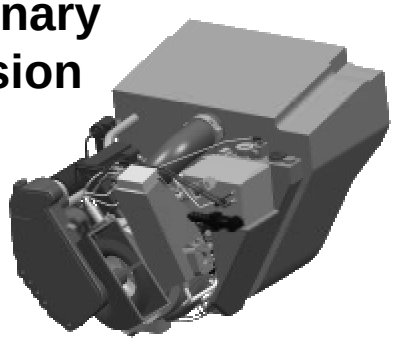

Advanced Materials & Production

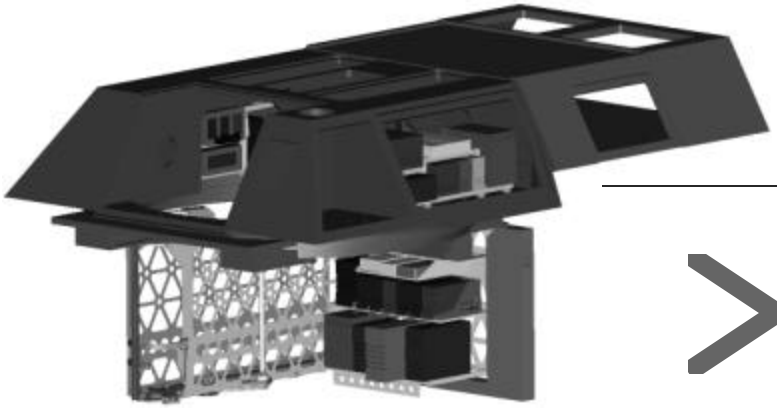

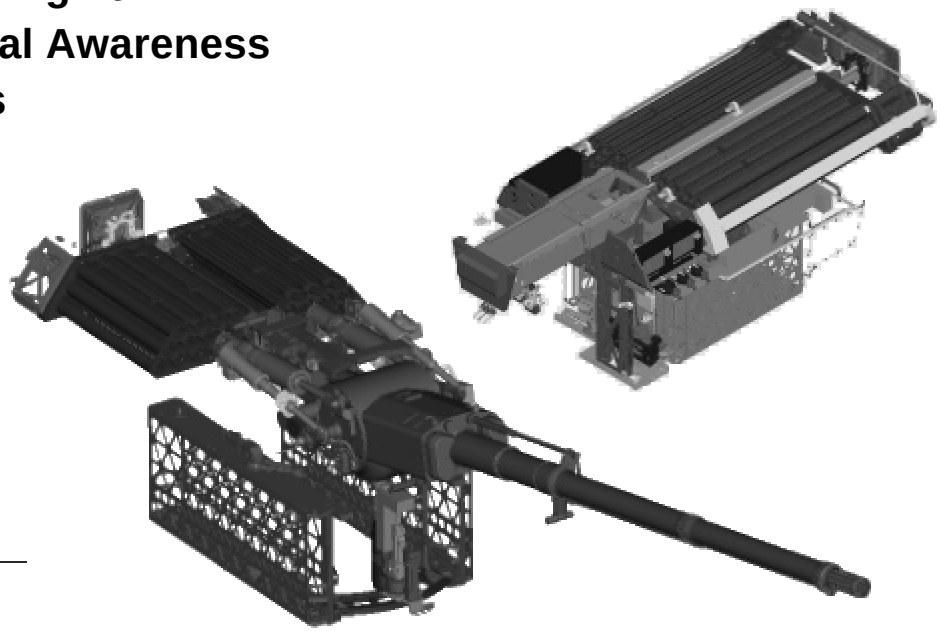

Robotic Firing and Resupply

In Summary . . .

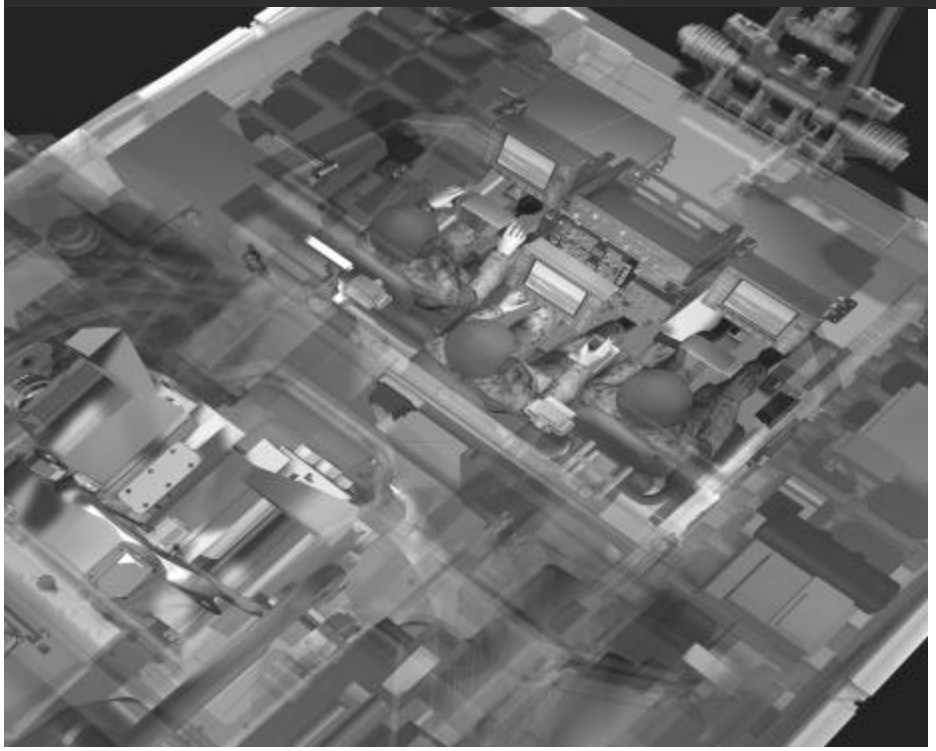

- Unique Design . . . Breaks Paradigm
- Technology Carrier . . . Design to Objective
- Transformation . . . Strategic Mobility
- Gain Overmatch . . . Tactical Agility
- Force Protection . . . Responsive Firepower
- Warfighting System . . . Keeps Soldiers Alive
- Program . . . On Cost, Schedule, Performance

With Crusader, the Army's Force Wins Decisively ….

First Installment of the Objective Force