DEPARTMENT OF DEFENSE

DEVELOPING SCIENCE AND TECHNOLOGIES LIST

SECTION 9: GROUND COMBAT SYSTEMS TECHNOLOGY

August 2003

Defense Threat Reduction Agency
Ft. Belvoir

PREFACE

The Developing Science and Technologies List (DSTL) is a product of the Militarily Critical Technologies Program (MCTP) process. This process provides a systematic, ongoing assessment and analysis of a wide spectrum of technologies of potential interest to the Department of Defense. The DSTL focuses on worldwide government and commercial scientific and technological capabilities that have the potential to significantly enhance or degrade US military capabilities in the future. It includes new and enabling technologies as well as those that can be retrofitted and integrated because of technological advances. It assigns values and parameters to the technologies and covers the worldwide technology spectrum.

The DSTL is oriented towards advanced research and development including science and technology. It is developed to be a reference for international cooperative technology programs. S&T includes basic research, applied research and advanced technology development.

SECTION 9—GROUND COMBAT SYSTEMS TECHNOLOGY

Scope

9.1 Combat Vehicles DCT-9-5

9.2 Indirect Fire Systems DCT-9-45

9.3 Reconnaissance, Surveillance, and Target Acquisition DCT-9-69

9.4 Battle Management DCT-9-85

Highlights

- Various technology advances in battle management, together with advances in accuracy and range of guided munitions (Section 9.2) and sensors on the ground and airborne in UAVs (unmanned air vehicles) and satellites (Section 9.3), are expected to enable MBTs (main battle tanks) and other armored fighting vehicles, both of which have historically been limited to engaging targets within LOS (line of sight), to engage targets beyond LOS (Section 9.4).
- A global information grid, an information sphere, will provide war fighters a common battlespace picture developed by remote sensors as well as by their own. Geographic registration will ensure that target location is the same for sensors and shooters (Section 9.4.B.3).
- A robust, mobile wireless communication network—a tactical internet—could be operational within a decade (Section 9.4.B.4).
- Digital communication networks using tactical internets, communication satellites, and software-based radios will minimize information latency and provide a basis for network-centric ground combat with centralized or decentralized command and control (Section 9.4.B).
- Network-centric combat provides major advantages over platform-centric combat: more shooters, shorter sensor-to-shooter timelines, and faster and better maneuver decisions (Section 9.4).
- Thermal imaging seekers with uncooled detector arrays are expected to show a 10× improvement in thermal sensitivity and twice the target acquisition range of current IR (infrared) seekers (Section 9.3.B).
- UGS (unattended ground sensors)—acoustic, seismic, optical, electro-optical (EO), and magnetic—incorporating microelectronic technology in long-life, inexpensive sub-cubic-centimeter volume and deployable in large numbers (thousands) will be a principal source of situation awareness. UGS will be effective in detecting and classifying targets and transmitting target data by wireless communication links (Section 9.3.C).
- UAVs fitted with electro-optical, IR, or SAR (synthetic aperture radar) can provide continuous imagery via satellite data link to tactical operators or force commanders. UAV sensors provide precision targeting reconnaissance, intelligence collection, and bomb damage assessment. Small UAVs have the advantage of reduced susceptibility to air defense; their data can be linked directly to a ground station or via an overhead relay (maybe another UAV) (Section 9.3.G).
- Two-dimensional (2–D) course-correcting (range and azimuth) Global Positioning System (GPS)-based fuzes will improve artillery precision against long-range targets (Section 9.2.D.8).
- LIDAR (LIght Detection And Ranging) systems will provide high-resolution imagery that is not susceptible to variations common to imaging IR. LIDAR seekers will be able to form 3–D images of targets to ensure positive identification of tanks, other armored vehicles, SAM (surface-to-air missile) sites, and missile transporter-erector-launchers (Section 9.2.D.8).
- The number of ATR (automatic target recognition) seeker tasks and the complexity of target-recognition algorithms will be significantly reduced on missiles equipped with GPS/inertial navigation system guidance that steers them to a precise location (Section 9.2.D.8).

Highlights (continued)

- Fiber-optic cable deployable from missiles to ranges up to 60 km can simultaneously relay imagery in one direction and command guidance in the other, enabling an operator to get eyes-on-target from a nose-mounted camera as the missile approaches the target (Section 9.2.D.8).
- Longer range and helicopter portability of towed guns/howitzers are especially important for early-entry intervention forces (Section 9.2.A).
- Emphasis on fast deployability means continued requirements for lighter combat vehicles. Given successful development, unmanned vehicles would provide deployability benefits in conjunction with manned systems. (Section 9.1.A.1).
- Long-running duel between tank protection and antitank weapons make nations hesitant to develop all-new MBTs. Western armies are expected to retain present MBTs with upgrades for another 20–30 years (Section 9.1.A.1).
- Balance between tank passive defenses and antitank weapons is likely to continue shifting as it has for decades; the development of antitank weapons keeps pace with advances in armor protection (Section 9.1.A.1).
- Unmanned ground vehicles appear best suited initially for combat support and combat service support roles as well as for security and fire support. Longer term roles for RSTA (Reconnaissance, Surveillance, and Target Acquisition) are desirable. With increasing levels of unmanned ground vehicle autonomy, questions to be answered are "What are the terrain types and mission conditions where human intervention can be reduced?" "What operations require a human in the loop?" and "What ratio of operators to robots are needed based on the mission, terrain, and payload type?" (Section 9.1.D.4).
- Because its munitions will be compatible with present guns, the ETC (electrothermal chemical) gun is the most likely electric weapon to become operational (Section 9.1.D.1).
- The high/medium-energy level (100 kJ) vehicle-mounted laser is expected to be a lethality option against rockets, air vehicles, light ground vehicles, and optics and antennas of armored vehicles (Section 9.1.D.1).
- Hybrid electric vehicle technologies have proved their efficiency benefits in commercial on-road vehicles (both cars and buses) and continue to show beneficial potential for military use where any of the following are needed: long silent watch or quiet mobility; large differences in average drive system power to peak drive system power (hill climbing, stop-and-go operations are examples); dual use of vehicle to provide external electrical power (as a mobile generator); recharging batteries for troops; and providing electrical power to onboard weapon or protection systems (Section 9.1.D.3).
- While electric transmissions offer several advantages in their own right, the incorporation of an ETC gun in an armored vehicle would provide the basic components—high-density electric energy storage, electric armor, and hybrid electric drive—for an all-electric armored fighting vehicle (Section 9.1.D.3).

OVERVIEW

"Developing critical technologies" are technologies that are the basis for superior performance of ground combat systems in 5 or more years—say by 2010 or 2020, or however far we can reasonably predict technology advances—or for sustaining an operational capability at less cost.

The following taxonomy identifies the various classes of Ground Combat Systems: Air Defense; Battle Management; Combat Vehicles; Indirect Fire Systems; Land Warrior; Mines; NBC (nuclear, biological, and chemical) Defense; RSTA; and Tactical Support Vehicles. This section focuses on Combat Vehicles, Indirect Fire Systems, RSTA, and Battle Management; however, Section 20 (Weapon Effects Technology) covers the means to mitigate nuclear weapon effects. Section 4 (Biomedical Technology) and Section 5 (Chemical Technology) cover other elements of NBC defense. Section 2 (Armaments and Energetic Materials Technology) covers mines and many elements—missiles, warheads, guidance, and fuzing—of air-defense systems. Land warriors in combat vehicles are covered, but dismounted Land Warriors are not. Tactical support vehicles (trucks) are not covered.

Section 9.1, Combat Vehicles, covers MBTs and other armored vehicles. This group also includes ground robotic vehicles and mission-related equipment: armaments, sensors, navigation and positioning systems, fire-control systems, and night sights. The group includes survivability measures: signature management, armor, and

camouflage. Automotive systems—diesel and turbine propulsion, electric drive, and all-electric vehicles—are included. And intervehicle communications, digitization, vetronics, and displays are also covered.

Section 9.2, Indirect Fire Systems, includes towed and self-propelled artillery, mortars, and rockets. The technologies of interest are weapon guidance, range, and accuracy; propellants; and command and control.

Section 9.3, RSTA, covers ground scout/reconnaissance vehicles thermal imaging, unattended ground sensors, radar and acoustic systems for locating enemy indirect-fire systems, UAVs, and surveillance satellites.

Section 9.4, Battle Management, technologies include centralized and decentralized command and control, digital communications, global information grid, tactical internet, communication satellites, software-based radios, threat environment; and countermeasures.

SECTION 9.1—COMBAT VEHICLES

Highlights

- Future battlefields are expected to be less densely packed with armor and artillery.
- Emphasis on fast deployability means continued requirements for lighter combat vehicles. Given successful development, unmanned vehicles would provide deployability benefits in conjunction with manned systems. (Section 9.1.A.1).
- Long-running duel between tank protection and antitank weapons make nations hesitant to develop all-new MBTs.
- The balance between tank passive defenses and antitank weapons is likely to continue shifting as it has for decades; the development of antitank weapons keeps pace with advances in armor protection.
- Western armies are expected to retain present MBTs with upgrades for another 20–30 years.
- Unmanned ground vehicles appear best suited initially for combat support and combat service support roles as well as for security and fire support. Longer term roles for RSTA (Reconnaissance, Surveillance, and Target Acquisition) are desirable. With increasing levels of unmanned ground vehicle autonomy, questions to be answered are "What are the terrain types and mission conditions where human intervention can be reduced?" "What operations require a human in the loop?" and "What ratio of operators to robots are needed based on the mission, terrain, and payload type?" (Section 9.1.D.4).
- Unmanned ground vehicle effectiveness in RSTA will be enhanced by employment with UAVs.
- With increasing levels of unmanned ground vehicle autonomy, questions to be answered are "What operations require a human in the loop?" and "How many robots can an operator control?"
- Because its munitions will be compatible with present guns, the ETC gun is the most likely electric weapon to become operational.
- The high/medium-energy level (100 kJ) vehicle-mounted laser is expected to be a lethality option against rockets, air vehicles, light ground vehicles, and optics and antennas of armored vehicles.
- Active protection in the form of soft-kill systems requires IR detectors, laser warning, radar warning, and devices to instantaneously integrate those signals and control a countermeasures suite; such systems are threat specific so all would have to be carried on a vehicle to gain protection against more than one part of the electromagnetic threat spectrum.
- Electric armor (aka smart armor) operation requires a high-voltage capacitor bank to provide the large electrical energy needed—given the present energy density of pulse-power supplies—to act against shaped-charge jets or penetrators. Such a system would occupy one-third of a tank's internal volume.
- Hard-kill systems are being developed to provide full-spectrum defense against top attack weapons, antitank guided missiles, and gun-launched kinetic energy (KE) and high-explosive antitank (HEAT) rounds.
- Hybrid electric vehicle technologies have proved their efficiency benefits in commercial on-road vehicles (both cars and buses) and continue to show beneficial potential for military use where any of the following are needed: long silent watch or quiet mobility; large differences in average drive system power to peak drive system power (hill climbing, stop-and-go operations are examples); dual use of vehicle to provide external electrical power (as a mobile generator); recharging batteries for troops; and providing electrical power to onboard weapon or protection systems. (Section 9.1.D.3)
- While electric transmissions offer several advantages in their own right, the incorporation of an ETC gun in an armored vehicle would provide the basic components—high-density electric energy storage, electric armor, and hybrid electric drive—for an all-electric armored fighting vehicle.
- Digital vehicle electronics (vetronics) will provide intra-vehicle and inter-vehicle communication capabilities that greatly improve situation awareness and enhance operational effectiveness.
- AFVs are expected to be increasingly outfitted with weapons that will engage target beyond line of sight (see more in Section 9.2).

OVERVIEW

As a result of the end of the Cold War and the consequent greatly reduced threat of war in Central Europe, attention has shifted to potential crisis areas throughout the world. This concern has led to a requirement to project forces capable of conducting peace support operations or to participate in a coalition in a regional conflict. Strategic mobility and air transportability are important factors for such forces and especially for the design of their armored vehicles (Williams, 1996). With a reduced threat of a Central European war, future battlefields will likely be less densely packed with armor and artillery. Expected scenarios involving NATO are likely to involve defensive operations against an ill-defined enemy (Ogorkiewicz, 1997c; Taylor, 1994/1995).

The use of military means by Western nations is characterized by the following guidelines:

- Confinement of military operations to specific political and military targets with the greatest precision possible;
- High level of protection for own troops;
- Efficient deployment of materiel and personnel;
- High system reliability at low cost. (Sellschopp, 2000, p. 51)

Greater concern for fast deployability has generated requirements for light combat vehicles with significant ability to fight. However, current doctrine and operational tactics backed by experience gained during the Gulf War, for example, indicate that the MBTs are still the main striking asset in today's armies. Most armies have appreciable numbers of tanks in service, and the leading countries continue to upgrade their MBTs. The long-running duel between tank-protection and antitank weapons appears to make these nations hesitant to field all-new MBTs until they have evidence that such an investment is wise. The balance between a tank's passive defenses and antitank weapons has already shifted several times with advances in composite armor, shaped charges, and explosive reactive armor. Tandem warheads and top-attack systems currently favor the antitank weapon, but the balance might swing when the tank is equipped with effective antimissile systems (Biass et al., 1998).

The United States, UK, Germany, and France expect to retain their present MBTs with progressive upgrades for another 20–30 years (*Military Technology*, February 1997; Pengelley and Hewish, 2000). Production of the M1 Abrams has ceased, but the U.S. Army is committed to operating upgraded versions for the next 25 years. The trend is toward evolving current vehicles by upgrading onboard systems. These systems, which give the tank its long life and are easily upgraded, are also the most expensive (Burley, 2000a).

This section covers three groups of combat vehicles—tanks, other armored fighting vehicles, and robotic vehicles. Roles and technical aspects are discussed for each group, followed by discussion of technologies.

A. TANKS

The roles of future MBTs are limited by two prevailing views. First, the optimal conditions for deployment of MBTs—free and open terrain with good trafficability and without buildings and vegetation—are not present in expected war scenarios. Second, there is a low probability that conventional defensive operations in the context of national defense or conventional offensive operations, such as the Gulf War, will require deployment of large numbers of MBTs; security, peace-keeping, or peace-support-operation scenarios, which are much more probable, will require small numbers of MBTs. It is already discernible that MBTs are being kept in armed forces' inventories only for relatively rare deployment options; however, the existence of about 45,000 earlier-generation MBTs worldwide constitutes a latent technical threat. Nations are unlikely to renounce the "powerful MBT as the main weapon system and main focus of their armies." Although the number of MBTs to be procured in the future will be drastically reduced, "only MBTs have the required strike power, go-through capability, and endurance" to face the latent technical threat posed by Russian development of a future MBT (Hilmes, 1999).

1. Future MBTs

The performance potential offered by new technologies, as well as the developmental risks they entail, are the technical issues that affect the conceptual guidelines for designing new-generation MBTs:

> The operational requirements to be considered in the design of a future MBT are of such a high level, that in many areas their technical implementation pushes against the boundaries of technological/physical feasibility. This statement applies in particular to the key system characteristics of weapon effectiveness and survivability, which additionally are in strong competition with each other. For example, the demands

relating to the terminal ballistic performance of future tank weapons could probably no longer be satisfied in a sensible way with conventional powder gun technology. On the other hand, to consistently implement protection/survivability requirements using current technology would, in the future, lead to MBTs with combat weight of between 75–80 tons.

Conventional technologies having reached their technical/physical limits on one side, and the lack of adequate R&D resources to explore innovative technologies on the other, have significantly reduced the development pace for new MBTs. Much more prominent today on a global basis are upgrade/ modernization programmes that would increase the combat effectiveness of tanks already in service and, thus, extend their service life. (Hilmes, 1999, p. 72)

a. Modernization/Upgrades

Performance parameters for MBTs include firepower, protection, mobility, and fightability. Some tank characteristics that equate to superior performance follow.

- Firepower
  - Precision and penetrating power;
  - Capable of engaging moving targets while on the move.
- Protection
  - Against all types of threats: direct fire involving KE or chemical energy (CE) ammunition; top attack threats; mines; and NBC (nuclear, biological, and chemical) conditions;
  - Ammunition and fuel stored under armor;
  - Effective fire extinguishing and explosion suppression systems in both crew and engine compartments;
  - Crew compartment overpressure and NBC protection and ventilation system;
  - Reduction of hydraulic components in the crew compartment through the use of an electric gun/turret drive.
- Mobility
  - High speed, including off-road;
  - Rugged, highly reliable suspension system;
  - Capable of negotiating extreme terrain obstacles;
  - Capable of quickly crossing water obstacles without major preparation, including about 4 m of water depth without external support;
  - Well-tuned suspension and damper system to enhance firing accuracy when firing on the move.
- Fightability
  - A modern command and control (C2) system that includes precise positioning with a hybrid navigation system (Global Positioning System [GPS] + independent inertial platform);
  - Digital graphic transmission of position data and orders;
  - Integration of all relevant system components (navigation, fire control, etc.);
  - Digital color map display;
  - Optimum ergonomic adaptation to crew stations and functions;
  - Integration of tactically relevant functions (target coordinate computation, target reporting, movement planning and support). (Sellschopp, 2000, p. 52–54)

With recent, ongoing, or near-term improvements to their MBTs, the United States (Abrams), the UK (Challenger), Germany (Leopard), and France (Leclerc) are variously upgrading:

- Firepower with depleted uranium (DU) projectiles; tungsten penetrator; and extended-range munitions;
- Protection with new armor, add-on armor, defensive aids package, and all-electric turret;
- Mobility with more reliable engine; auxiliary power unit (for use during mounted surveillance);
- Fightability with battle-management system, combat-identification (CID) system, digitization, navigation aids, gun-pointing aids, new thermal imaging, and high-speed sensor-to-shooter link (Pengelley and Hewish, 2000; Lett, 1996a; Sellschopp, 2000; Hanel, 1999; and Klotz, 2000).

The recently developed Russian T–90 MBT, which is almost identical in layout to the T–72, has explosive reactive armor panels, a day and thermal imaging sighting system, and an integrated computerized fire-control system (Foss, 2000–2001). France is also introducing a three-man crew with autoloader in its latest series Leclerc (Klotz, 2000).

While Russia is reported to be developing a new MBT (Hilmes, 1999), European contractors—Ukraine, Czech, French, and German—are proposing programs to modify the propulsion system of the T–72, 20,000 of which are distributed in many armies. The present power-pack compartment volume is 3.1 m^3 in the T–72, and latest European designs require 4.5–5 m^3 for the engine and transmission (Mydlarz, 1999).

b. Future MBT Concept

A future MBT concept can be expected to have the following features:

(1) Crew

Extensive automation of basic functions—driving, navigation, reconnaissance, and operation—will enable the MBT to be operated by a two-man crew in a more compact fighting compartment (Hilmes, 1999).

(2) Weight

The combat weight should not exceed MLC (Military Load Class) 60, or about 55 tons. The possible reduction of crew from four to two and the realization of a compact fighting compartment—with a net volume of about 3 m^3 versus 10–12 m^3 for current MBTs—will have a positive effect on weight reduction. And a similar effect will be realized by volume reductions in engine technology. For example, the Euro power pack is about 35 percent smaller than the Leopard 2 engine, but delivers the same power; however, the new armament system will increase weight. Increasing gun caliber to 140 mm—these rounds are about twice as heavy as 120-mm rounds—will increase overall ammunition weight even with a one-third reduction in the ammunition reserve. Weight gain will result from a bigger overall installation to accommodate higher recoil energy (from 155 to 270 kJ) and braking force (from 600 to 1,200 kN). The autoloader will weigh at least 600 kg. The greatest increase in weight is expected from demands for increased protection:

> Future requirements are expected to specify protection levels for the fighting compartment area of [about] 1000 mm rolled homogeneous armor (RHA)-equivalent against 125 mm kinetic energy (KE) threats, and 1200 mm RHA-equivalent against shaped charge threats. If the KE threat is to be met with the use of purely passive protection elements, it would be necessary to think in terms of an area density of over 4 tons/m^2. It remains doubtful as to whether the KE threat can be effectively mastered in the medium-term (up to the year 2015) through the use of stand-off active protection systems. Protection against the shaped charge threat is less of a weight-related question. Here the use of reactive armor provides an obvious solution, through which a reduction of the penetration performance from 400-600 mm can be expected (e.g. Russian MBTs). Alternatively it is also possible to maximize the depth of protection through the use of passive armor technology, as adopted for instance in the turret area of the Leopard 2A5.
>
> Without significant developments to the basic protection concepts and protection technologies, combat weights in the region of 70 tons have to be expected for the next generation of MBTs. There could thus be no question of remaining within MLC 60 limits. (Hilmes, 1999, p. 74)

(3) Mobility

The future MBT should have a power/weight ratio equal to the Leopard 2A4's 20 kW/ton. Despite size reductions in the fighting compartment and engine space, and the use of unmanned turrets (external gun mounts), increases in dimensions should be expected:

> *Increase in length:* Through the use of special armor with greater depth, a structural depth of up to 2000 mm can be achieved in some areas. Moreover, a reduction of the vehicle's overall length would make little sense from the total system's technical point of view, because obtaining a still just tolerable specific ground pressure (9 N/cm^2 = 90 kPa) necessarily requires a track contact length of at least 5000 mm.
>
> *Width:* The respect of railway transport limits dictates an absolute maximum net vehicle width of 3480 mm (over tracks). Additional side protection (to a depth of [about] 150–200 mm) must be designed to be removable/hinged.

Increase in height: An increase in height is clearly to be expected as a result of the requirements for increased protection against full-width mines (+150 mm) and bomblets (again +150 mm). Demands for higher mobility would further increase the height, because the suspension and therefore also the ground clearance would have to be raised. [The factors that influence the height of a future MBT are shown in Figure 9.1-1]. (Hilmes, 1999, p. 74)

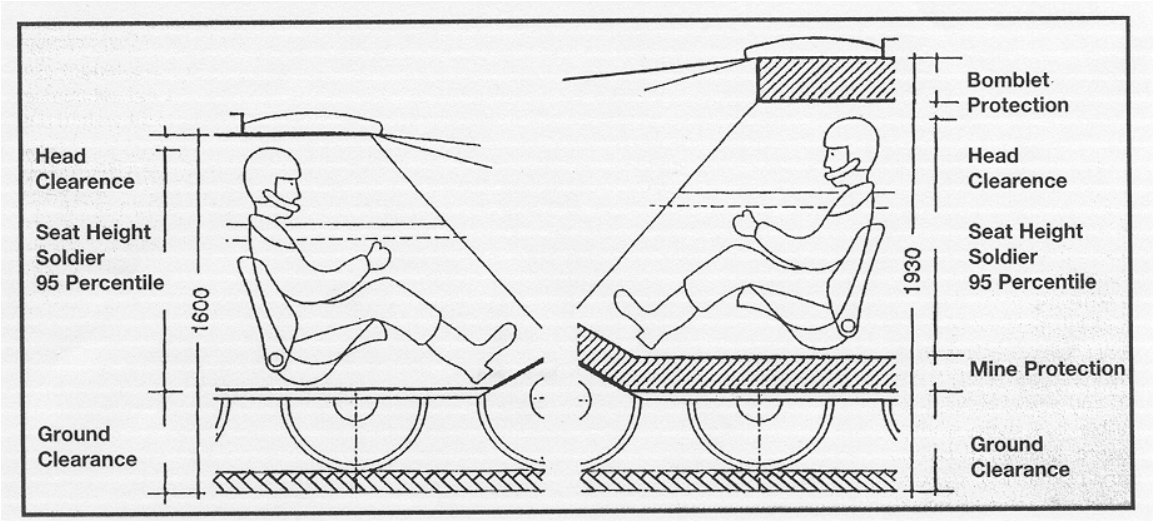

Figure 9.1-1. Factors Influencing the Height of Future MBTs (Source: Drawing by Rolf Hilmes in *Military Technology*, June 1999)

(4) Protection

Several different means beyond traditional armor are necessary for future MBTs:

Effective ballistic protection on the frontal arc (±30°) should be secure against KE and shaped charge projectiles from large calibre tank guns, while the sides should be secure against automatic cannon fire and hand-held anti-tank weapons, the roof should withstand anti-tank missiles with top attack profile and bomblets, and the lower surfaces should absorb the detonation of full-width anti-tank mines. Signature-reducing measures (optical, infrared (IR), radar) should be introduced, as well as deception/ disruption and ultimately active defence systems against anti-tank guided missiles and other precision weapons. Deployment of defensive aid suites (DAS) both soft kill and hard kill, should be pursued. (Hilmes, 1999, p. 73)

The fundamental demands identified above have been the key problems associated with tank development for years. They frame the feasibility risks for a future MBT:

Implementing the protection requirements within weight limits established a priori; containing the external dimensions in line with the demands for mobility/transportability and survivability (low silhouette); obtaining the required functional capabilities with their relevant technologies, within previously established financial limits and given time frame; and guaranteeing the necessary reliability in view of the complexity of the total system. (Hilmes, 1999, p. 73)

Some new technologies, which will be discussed later, would be considered for a future MBT development:

Alternative Weapon Technologies: Hybrid weapons to include the electro-thermal gun (ETK) and the electro-thermal-chemical gun (ETC), or electro-magnetic weapons in either the rail gun or coil gun variant; electrical energy supply and electric drive; new protection technologies and DAS (both soft kill and hard kill); realization of an effective complete protection concept; new fighting compartment design, new operation and display concepts; new optronic reconnaissance sensors. (Hilmes, 1999, p. 75)

B. OTHER ARMORED FIGHTING VEHICLES

Efforts are underway to develop new armored vehicles that may ultimately replace today's tanks. They will provide fire support for rapid-deployment/early-entry forces (Pengelley and Hewish, 2000). "The Gulf War [demonstrated the important] role of early-entry forces. Such forces must be able to deploy rapidly, enter the theater

of operations (either unopposed or with the aid of force), secure the local area, and either immediately have a decisive effect or create the foundation for substantial follow-on forces" (Hewish, 1996).

The general utility and effectiveness of wheeled armored fighting vehicles are reflected in increased employment of them by Western armies. Continued increasing employment of them is expected in the future:

> However, wheeled armored vehicles have their limitations. These are particularly evident when it comes to movement off the road and especially over soft soils or snow. Their ability to operate over such soils is undoubtedly restricted and decreases with their weight. Yet a number of current programs involves the development of vehicles which are heavier than ever.
>
> This raises questions about the ability of some of the vehicles currently under development to operate effectively over the whole spectrum of military operations. These questions include their ability to cooperate with or support effectively tracked armored vehicles, which have greater terrain accessibility and will, therefore, operate over much more of the ground.
>
> The ability of wheeled vehicles to move over soft ground can be improved by reducing the inflation pressure of their tires, which increases the tire-ground contact area. But reduced inflation pressure requires vehicles to move more slowly, to avoid damaging their tires by overheating and increases the danger of cuts to the tire sidewalls as well as reducing the stability of vehicles on side slopes. In any case, timely deflation of tires is only practicable when the vehicles are fitted with a Central Tire Inflation System (CTIS).
>
> The most that can be done for continuous operation at not more than about 20km/h by reducing the inflation pressure is to lower the VLCI [Vehicle Limiting Cone Index, which is the "go-no go" soil strength] of vehicles so that the maximum weight at which the best designed of them can move over wet soft soils rises from 13.5 to 20 tons. (Ogorkiewicz, 2000b, pp. 59–60)

Wheel vehicles can cross 85 to 90 percent of the terrain they encounter, but the 10 to 15 percent they cannot cross matters to scout vehicles because they must cross any terrain to get closer to the enemy (Tiboni, 2001a).

1. Fire Support

These rapid-deployment fire-support vehicles are expected to have a tank-like capability for reconnaissance, security, and intervention missions (Hewish, 1996). They are expected to provide mobility and lethality equal to or better than current tanks. Such vehicles will be underdogs in direct-fire shootouts with modernized tanks having equal or better armament. A major source of lethality will be an extended-range engagement capability, including an ability to engage targets beyond line of sight out to several kilometers (Erwin, 2001b). Such extended-range lethality is the fire-support vehicle's best means of protection.

2. Other Roles and Missions

a. Infantry Fighting Vehicle

There is a well-established need for mechanized infantry to accompany and work with tanks. As infantry fighting vehicles (IFVs), light armored vehicles (LAVs) are used for transporting infantry for dismounted action or as fighting platforms. The IFVs, which usually are employed with tanks in battle groups, give the infantrymen protected mobility and light/medium armament; however, their size—particularly height—approximates the size of accompanying MBTs and thus presents a large target (Fletcher, 1992). Since they move in battle groups over the same terrain as tanks, they are generally tracked; some IFVs, however, are wheeled vehicles with armament similar to that on tracked IFVs.

In battle groups, IFVs are not armed or armored to fight enemy MBTs. An exception: Israel outfits its mechanized infantry combat vehicles (MICVs) with armor comparable to MBT armor so they can accompany Israeli tanks. Although IFVs are usually armed to fight enemy IFVs, such action is questionable if it exposes troops they carry to considerable and unnecessary risk. Other IFV roles include armored mortar carrier, antitank guided-missile launcher carrier, armored command vehicle, and ambulance and recovery vehicle, as well as vehicles for peace-keeping operations (Ogorkiewicz, 1999c, 1997b).

The American Bradley Fighting Vehicle (BFV), of which about 6,900 have been fielded, was produced in two forms: IFVs and cavalry fighting vehicles (CFVs). As a result of experience in the Gulf War, BFV derivatives are used for several non-IFV/CFV missions: air defense (Stinger), field artillery (forward observer), command and control, and combat engineers (Gourley, 1999).

b. Reconnaissance Vehicle

Another principal function of LAVs is combat reconnaissance. Reconnaissance forces use mobile, lightly armed vehicles to gain critical information on the battlefield. "All armies employ armored reconnaissance at various levels of command" to provide early warning and continuous information so that main forces can be used to best effect (Williams, 1993). Reconnaissance is sometimes done by force (heavy reconnaissance) or by stealth (light reconnaissance or scouting). In heavy reconnaissance, the vehicles are expected to fight for information. The different levels of reconnaissance affect platform and sensor requirements (Pengelley, 1996a). Reconnaissance by force involves deliberate engaging in combat to (1) gather information on strength of enemy forces, (2) prevent the enemy from gaining information about own forces, and (3) in defensive situations, delay or stop enemy actions. In this activity, the "reconnaissance units are organized [as] armored cavalry and/or mechanized troops, including MBTs, armored IFVs and other mobile antitank assets within a divisional or army corps structure." These units may need to engage the enemy immediately upon contact and face MBTs; such risk makes it necessary for friendly MBTs or heavy armed IFVs to deliver lethal or incapacitating antitank fire (Bianchi, 1999).

Light reconnaissance operations are performed by one or a few units moving as discretely as possible to maintain surveillance over an area and/or to gather information about the terrain and enemy forces while avoiding direct engagement. The tasks for these scout operations are "(1) to reach the assigned reconnaissance area without being intercepted; (2) maintain surveillance of that area as long as possible; and (3) if discovered, fight only in self defense" (Bianchi, 1999).

The following characteristics and performance parameters influence the design of reconnaissance vehicles:

- **Acquisition and passage of information:** "The scout vehicle should be equipped with powerful surveillance systems and the rapid means to collect and pass information gained securely and expeditiously to the appropriate command level" (Williams, 1993). The vehicle will have an on-board navigation system, sensors, and reliable IFF (identification friend or foe). Recent improvements in observation/surveillance capabilities include installing sensor(s) on an elevating or telescopic mast to provide direct LOS while the vehicle remains under cover. Covert surveillance could also be enhanced by removing the vehicles sensor package and installing it on a remote tripod with bidirectional cable/fiber optics (Bianchi, 1999).
- **Mobility:** There are strategic, operational, and tactical levels of mobility, all of which are affected by the wheels versus tracks issue. Some armies emphasize operational mobility by favoring wheels "because the vehicles can cover long distances on roads at higher speed with less administrative load." Tracks offer a strategic advantage "because they are lighter and more compact for air transportability." Tracks have an advantage tactically because they are able to go wherever the scout vehicle "can see and report throughout the tactical commander's area of interest." An amphibious capability is required.
- **Survivability:** Signature and protection are important. The scout vehicle must be small to limit visual acquisition. The need for acoustic quietness puts tracks at a disadvantage. The vehicle should be electromagnetically stealthy with a very low thermal signature.
- **Firepower:** "The scout vehicle should be equipped with a weapon for self defense, ideally against tanks." This requires an antitank guided weapon (AT GW) like TOW (tube-launched, optically tracked, wire-guided).
- **Flexibility and sustainability:** High levels of strategic mobility and operational mobility make reconnaissance units useful for low-intensity operations in peace-keeping and counterinsurgency scenarios, which influence the wheels versus tracks design issue. Endurance and commonality are important qualities for reconnaissance vehicles that will operate over extended distances with long lines of communication and supply (Williams, 1993).

C. ROBOTIC VEHICLES

Military robots come in various shapes and sizes—from unmanned combat vehicles to swarms of insect-like devices that will collaborate on specialized tasks. Teleoperated (remotely controlled) machines are widely used for clearing mines and disabling bombs. Today's teleoperated robots will provide experience to support a move to "tele-supervised robots":

> [They will have] a remote operator who need[s] only occasionally [to] provide commands in near-realtime. The ultimate goal is for a single operator to work with large numbers of autonomous robots. Such machines would be reprogrammable; maintain stable behavior even under complex, uncertain and changing

> conditions; [are] able to learn; and operate safely and reliably in close proximity to humans. For many applications, they could be small enough to be slipped into a soldier's pocket. (Hewish, 2001a, p. 34)

We expect manned systems to be replaced by unmanned platforms for missions that are dirty, dangerous, and dull. Unmanned ground vehicles appear well suited for these mission categories (Hewish, 2001a): RSTA, MOUT, EOD, physical security (robotic sentries to patrol facilities), and countermine operations. For combat support or combat service support a robotic follower—in a follower-leader concept—can navigate by position way points communicated from a manned lead vehicle, or it might navigate using GPS.

For the RSTA mission, tactical unmanned ground vehicles operating in front of battalions are expected to describe the nature of terrain, find the enemy, locate obstacles, acquire targets, detect chemical vapors, and provide this information to the battalion's battle staff (Hewish, 2001a). Mission effectiveness can be enhanced by employing tactical unmanned ground vehicles and UAVs together. In this operation, the UAV could be a small, very lightweight (about 10 pounds), battery-operated vehicle that can be hand-launched (Schwartz, 1994).

If and when unmanned ground vehicles become practical for the RSTA mission, human decision-making will be as far forward as possible:

> The human operator can profit from cues provided by technological aids, but at root there needs to be a "man in the loop" to filter out feints. Further, deception stands to be a particular problem with automatic alerters when combined with emerging "battlefield digitization" or information-technology systems. Commanders, striving to remain "inside the enemy's decision cycle," could too easily be tempted to base their decisions on unfiltered realtime information inputs that digitization potentially makes available to them. (Pengelley, 1996a, p. 45)

Thus, the need for man in the loop for the RSTA mission makes it unrealistic to expect a single operator working a large number of robotic vehicles for that mission.

D. TECHNOLOGY IMPROVEMENTS

Ground combat vehicle improvements are discussed in these technology areas: armament, survivability, automotive systems, unmanned vehicles, digitization, vetronics, and human systems integration. Target acquisition by ground combat vehicles is discussed in Section 9.3 of this document. More coverage of ground combat vehicle-related technologies can be found in other MCTL sections: Section 2, Armaments and Energetic Materials; Section 7, Energy Systems; Section 14, Materials and Processes; Section 16, Positioning, Navigation, and Time; and Section 18, Signature Control.

1. Armament

a. Guns and Projectiles

Designing MBT guns starts with effectiveness required at the target and the effective engagement range. These values are used to derive the required armor-piercing performance of the ammunition. "Worldwide progress in the development of new types of armor protection, such as composite, stratified and active and reactive armor, [has]… resulted in a considerable improvement of the MBT's passive protection and, thus, of its survivability when faced with guns currently in service" (Tiedemann, 1993). Improved performance of tank guns is needed to overcome continuing advances in protection systems.

The most effective armor-piercing rounds rely on KE. In general, they are designed as long-rod penetrators with a surrounding sabot. Most improvements in 120-mm KE ammunition performance are the result of the use of longer DU rods and improved penetrator and sabot materials. Their performance is mainly a function of impact velocity and impact energy, as well as of material and length-to-diameter ratio.

Because increases in tank armor protection produce tougher targets for tank guns to defeat, more powerful guns will be required on future tanks. To defeat improved armor, tank guns need to fire APFSDS (armor-piercing, fin-stabilized, discarding sabot) projectiles with a muzzle energy of about 18 MJ; current 120-mm tank guns have muzzle energy of only 9–11 MJ. The KE of tank-gun projectiles can be boosted by increasing either the mass or the velocity of the projectiles. Increasing the mass implies increasing the gun caliber. A noted tank expert describes efforts to increase caliber:

> This possibility has been explored since the early 1980s, when 145 mm guns were incorporated into the designs of the U.S. Future Close Combat Vehicle Program (FCCVS); in 1988, France, Germany, the UK,

> and the United States agreed on 140 mm as the caliber of future tank guns. Subsequently, all four countries (as well as Israel and Switzerland) built experimental 140 mm guns.
>
> Guns of such caliber can attain the 18 MJ energy level considered necessary to defeat improved tank armors, since their chambers are twice as large as existing 120 mm guns. They can also be accommodated in modified versions of existing tanks, as shown in 1994 by the installation of the U.S. 140 mm XM291 gun in the Component Advanced Technology Test Bed (CATTB), which consisted of a two-man turret with a bustle autoloader mounted on a modified M1A1 tank hull.
>
> However, the prospect of installing 140 mm guns has not proved popular with tank users because of the large size of the ammunition, and the consequent reduction in the number of rounds able to be stowed (although a tank like the CATTB could carry up to 39 rounds—only one fewer than the M1A1 for its 120 mm gun). In addition, the break-up of the Soviet Union removed the urgency to replace existing 120 mm tank guns. Armies have given up supporting the development of conventional, solid-propellant (SP) 140 mm tank guns. However, these remain the standard by which other new guns are measured, and this year GIAT, Rheinmetall, and Royal Ordnance, formed a joint venture company to pursue further development. (Ogorkiewicz, 1997c, p. 30)

For the near term, armies expect to obtain some improvement in the armor-defeating capabilities of their tanks by continued development of their 120-mm guns. No major increase in projectile mass is expected; however, some increase in the mass of penetrators will occur as the amount of advanced materials (used to decrease the parasitic mass of the sabots) is reduced. Any significant increases in projectile muzzle energy can be achieved only by increasing muzzle velocity above the current level of 1,600 to 1,800 m/s. Some increase in muzzle velocity can be achieved by using higher energy propellants and lengthening gun barrels (Ogorkiewicz, 1997c).

While MBTs are not expected to carry larger caliber guns, IFVs (infantry fighting vehicles) will likely follow the present trend of incorporating progressively larger and heavier cannons—35 mm or 40 mm—to enable them to defeat opposing IFVs, the armor protection of which is improving (Ogorkiewicz, 1999c).

The growth potential of conventional powder-actuated guns is discussed in an early 1990s journal:

> The optimal impact velocities lie, depending on armor and penetrator types, in a range between 2,000 and 3,000 m/s, which is beyond the reach of conventional powder-actuated guns. As a consequence, studies for future tank armament are concentrating on electromagnetic guns, which have been experimentally proven to be capable of generating such projectile speeds.
>
> In addition to considering the required penetration power, the process of selecting a suitable tank electromagnetic gun must take the entire MBT weapon system into account. Important system aspects in this connection include the weapon-discharge chain: from the primary energy source to the generator and storage medium to the effect at the target. Linkage/interfaces to drive and protection [are important;] first we must consider the possibility of integrating gun-system elements into the overall MBT system, including factors such as the gun-system's weight and its overall efficiency (the ratio of achieved kinetic energy to absorbed electrical energy). Gun weight and power supply volume have a significant impact on the MBT's total weight.
>
> Gun weight is primarily a function of caliber. For this reason, a smaller caliber is considered desirable for future lighter systems. Gun efficiency determines the requirements for the power-supply system, which consists of generator, storage system and pulse former. The higher the efficiency, the lower the power-supply system's weight and volume. (Tiedemann, 1993, p. 10)

The above considerations have driven combat vehicle designers to an all-electric vehicle "that reflects the medium/long term goal of producing a new generation of combat vehicles through the application of new technologies, and thus achieving a quantum leap in technical and tactical performance." Compared with combat vehicles based on conventional technology, the all-electric combat vehicle would use technology already available or currently in development to generate electricity for the following functions:

- Transformation into kinematic energy for powering the drive train and controlling the main armament;
- Transformation into short-term high-voltage energy impulses for high acceleration of ballistic ammunition and stand-off active protection elements;
- Transformation into focused electromagnetic energy (laser, high powered microwave [HPM]) for damaging or destroying optic and optronic sensors and electronic assemblies. (Grosch, 1999, p. 37)

The all-electric vehicle is discussed in Section 9.1.D.3.

b. Electric Weapons

A recent *Military Technology* journal discussed in more detail the motivation for developing electric weapons and described three "electric gun" concepts:

> Conventional tube weapons are the product of a mature technology, and have now reached a high level of performance. However, on account of the gas-dynamic processes of thermally transformed powder, its molecular weight means that the muzzle velocity of projectiles is theoretically limited to approx. 2,300 m/s. In conventional tank ammunition, the weight of a projectile designed to achieve a muzzle velocity of 1,800 m/s corresponds roughly to the weight of the propellant charge. To achieve 2,000 m/s, the amount of propellant has to be roughly doubled, with a corresponding increase in recoil forces. Despite this, contemporary tank guns still offer a considerable growth potential, and electric guns will have to be able to match or exceed this in order to become an attractive proposition.
>
> The generic term, "electric guns" actually involves three very different concepts:
>
> – Complete transformation of electric energy into the kinetic energy of the projectile (electromagnetic guns: rail gun, coil gun);
> – Transformation of inert propellant with a lower molecular weight into propellant gases (electrothermal Gun, ETK);
> – Enhanced combustion of the propellant charge so as to produce a muzzle velocity and/or muzzle energy not achievable with conventional powder-operated guns (electrothermal-chemical gun, ETC).
>
> #### *(1) Coil Gun and Rail Gun*
>
> The rail gun and coil gun are electromagnetic systems that use Lorentz force to accelerate the projectile, and are thus completely free from gas-dynamic limitations. These are the only two principles for achieving otherwise unobtainable projectile muzzle velocities. However, the muzzle energy is obtained exclusively from electrical energy, and the high level of acceleration required demands an extremely high energy input. In order to attain muzzle energy levels of approx. 25 MJ, electric energy of 40–60 MJ with a maximum output of approx. 10–15 GW is needed. The resulting power supply requirements are such that, at least for the foreseeable future, the use of these weapons in vehicles is effectively ruled out. Actually, in order to attain the necessary energy and especially the necessary pulse output, the only feasible form of energy supply would be a supraconductive inductive storage cell.
>
> #### *(2) Electrothermal Gun (ETK)*
>
> In principle, the electrothermal gun consists of a conventional tube weapon, but with a plasma burner integrated in the chamber. An electric arc is generated by two electrodes, which vaporizes the material between them heating it into a hot, highly compressed propellant gas, which then accelerates the projectile in much the same way as conventional powder-operated gun. Since a material with the lowest possible molecular weight is transformed into a plasma-like state through the application of electricity, in principle it is possible to achieve higher muzzle velocities than with conventional, thermally-converted propellant gases.
>
> Once again, the disadvantage here is that the muzzle energy is generated exclusively through the transformation of electrical energy, requiring the storage of very large amounts of energy and extremely high output levels. These factors are decisive in determining the technology and construction design of the storage cell and the transmission of electrical energy from the storage cell to the weapon. Thus, for a muzzle velocity of 15 MJ in a 120 mm-cal. system, approximately 70 MJ of electrical energy is necessary, with a peak output of 20 GW. Here again, the potential operational advantages are confronted by the basic disadvantage that today—and the same goes for the foreseeable future—there are no storage cell designs that would enable the integration of weapons of this type in a tactical vehicle. Based on realistic degrees of effectiveness, it can be estimated that just to generate 50 MJ of electrical energy, a 1,000 kW power pack and generator working at top capacity for 70 s would be necessary to load the storage cell. The realisation of the electrical assemblies necessary for integrating a weapon of this type into a vehicle can be ruled out for the foreseeable future.

(3) Electrothermal Chemical (ETC)

Conversely, the electrothermal-chemical (ETC) cannon would seem to be a technology that could be put into practice. The energy for propelling the projectile is generated by means of a special powder charge featuring greater density than conventional propellants, and whose chemical transformation is influenced by the input of electrical energy. Two principles are currently being investigated:

- In an ETC with plasma combustion, the high-density propellant powder is initiated by means of an electric arc and then burns off independently;
- In an ETC with plasma combustion and controlled burn-off, the electrical energy is sequentially introduced, leading to a more favorable progression of internal pressure in the weapon than can be achieved with uncontrolled combustion.

In either case, the energy input requirement (700–2400 kJ) is considerably less than in electrothermal or electromagnetic guns. The maximum electric output for transforming the electrical energy lies in the region of 0.1 to 2 GW.

In terms of design, ETC guns largely correspond to conventional guns. Since the kinetic energy is mainly obtained through the thermal transformation of powder, performance is basically limited to the potential inherent in conventional powder-operated guns. Experiments are currently being conducted to determine how great an increase in performance a 120 mm ETC can achieve compared with a conventional design. The reference system is the 120 mm L55 smooth-bore gun with LKEII ammunition, which has the potential for improved performance in the form of, for instance, temperature-stable ammunition or an enlarged firing chamber (Grosch, 1999, p. 43).

Figure 9.1-2 shows an ETC gun concept.

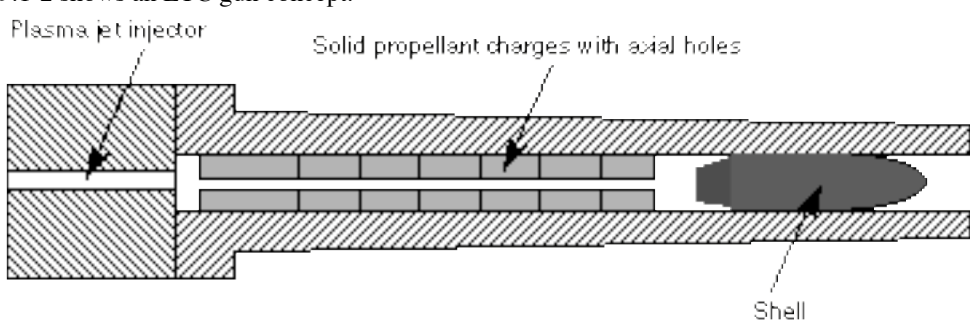

Figure 9.1-2. ETC Gun Concept (Source: Manson, 1997)

Aspects of the energy supply for a controlled-combustion ETC gun are discussed below:

Energy Supply for a Controlled-Combustion ETC Gun

In addition to the ETC weapon system proper, assemblies for storing electrical energy, for charging the energy storage cells and for transmitting the power needed for the electrical energy input are also required. Capacitances are employed as storage cells.

In order to avoid an elaborate pulse forming network (PFN) for the output progression during the discharge of the capacitative storage cell, [a] 2.4 MJ storage cell is divided into six 400 KJ modules. During firing of the weapon, these storage cells are sequentially discharged in such a manner that the desired progression for a controlled combustion is set. Apart from the capacitor, each module contains a vacuum switch, an inductivity, a dump resistor with a relay, as well as a control assembly. At a voltage of 3 kV, a capacity of 650 microF is produced.

The energy densities of today's capacitors amount to approx. 3 MJ/m^3; current developments indicate that future values of 10–15 MJ/m^3 with a power output of up to 100 GW can be expected. The modules are connected to the breech of the weapon via six 35 mm-diameter cables. Here, the approx. 600 mm recoil of the weapon must be taken into account.

A charging device is necessary for charging the capacitative storage modules. In order to optimise the power balance, it is advantageous to use an output-controlled charging device which, with an approx. 82 percent degree of effectiveness in charging a storage cell to 2.4 MJ in 3.5 s, will not exceed a maximum required power input of 950 kW. The charge time of 3.5 s, must not be exceeded, since modern loading

> technology enables an average ammunition loading time of 5.5 s, with the first three shots being fired at intervals of 3–4 s. With an optimised output-controlled charger for high-performance, short-term operation, the objective is an installation volume of [0.5 m^3].
>
> If charging of the energy storage modules were to be done directly from the generator of the diesel engine, the entire output would be required for the charging operation, and no more power would be available for the vehicle during this phase. Thus, to avoid limiting mobility, when using an ETC it is absolutely imperative to install an MDS [magnetic dynamic storage flywheel, an electric energy accumulator] for intermediate energy storage. (Grosch, 1999, p. 44)

An industry consensus expects that, at current rates of development expenditure, ETC technology would not be mature enough for fielding before 2015 (Pengelley, 2000c).

Apart from the electromagnetic gun (coil gun and rail gun) problem of providing sufficient electrical energy within the weight and space confines of armored vehicles, a major problem is posed by the design of electromagnetic rail launchers suitable for mounting. "These launchers have to be much lighter than the massive, static launchers used in laboratories. Unlike gun barrels, rail launchers are complex and some of the attempts already made at containing conductors carrying currents of up to 3–4 million amps within light but adequately stiff and strong structures have failed" (Ogorkiewicz, 1999b).

c. Directed-Energy Weapons

To complete coverage of electric weapons, concepts for laser weapons and high-power microwave (HPM) weapons are briefly discussed below with an emphasis on energy requirements:

Laser Weapons

> There are various conceptual approaches to laser weaponry. Within the context of the integration of electrical weapon and armor systems, a medium-energy laser (MEL) will be considered here whose purpose is to damage the optic/optronic sensors of an enemy vehicle or aircraft to such an extent, that an aborted mission or at least a significant reduction in performance will result.
>
> A MEL of this type emits a burst of ten pulses per combat engagement, with a pulse rate of 10 Hz and an energy of 1 kJ/pulse. Assuming a degree of efficiency of approx. 10%, the power supply system must provide an output of 100 kJ. When capacitative energy storage cells are used, the energy supply is basically the same as with the ETC gun and from this standpoint, integration is not expected to cause problems. (Grosch, 1999, p. 44)

A U.S.-Israeli Tactical High-Energy Laser program is aimed chiefly in knocking out small, cheap rockets often used by guerrillas. The deuterium-fluoride-powered laser, which is ground mounted, combines radar tracking with a targeting and control system similar to the U.S.'s Airborne Lasers. Since mid-2000, the 10-km-range weapon has shot down more than 20 rockets. It is so fast that nothing—rockets or aircraft—can maneuver out of the way once it is locked on. While mounted on a concrete platform in tests, expected shrinking in size will make it suitable for mounting on a truck (Freedman, 2001).

With the potential for application against ground-based targets as well as rockets and aircraft, the Advanced Tactical Laser (ATL), a DoD-sponsored multiple-10s-of-kilowatts oxygen-iodine laser weapon, will be put on aircraft for use against targets at multi-kilometer ranges. Against tanks, the objective is to disable by aiming the laser energy at sensors and antennas. The ATL can place a small-diameter beam on distant targets and fire multiple shots before running out of lasing chemicals. The interaction with the target develops blowtorch-like heat that would be lethal against light vehicles and critical components of armored vehicles (Freedman, 2001).

A goal of near-term research is to replace the current chemically fueled laser with a solid-state weapon that gets its energy from electrically driven diode lasers that pump a neodimium (Nd) or ytterbium (Yb) doped yttrium-aluminum-garnet (YAG). Whereas laboratory versions of solid-state lasers currently put out about 1 to 10 kW of power, the goal is 100 kW, which is enough to serve as a weapon.

> Even further down the road, researchers hope to replace the Nd:YAG or Yb:YAG slabs or rods with fiber-optic lasers like those already used in some telecommunications applications. A fiber-optic laser might fit in a [HWMMV] and, because it would be electrically powered, could run off of the vehicle's generators, shedding the burden of resupplying special fuel. (Freedman, 2001, p. 62)

Human rights groups have opposed laser weapons because they can blind people. The Geneva Convention on Conventional Weapons, Protocol IV (Protocol on Blinding Laser Weapons), Article 1 prohibits employing "laser

weapons specifically designed, as their sole combat function or as one of their combat functions, to cause permanent blindness to unenhanced vision." However, Article 3 of the same protocol states, "Blinding as an incidental or collateral effect of the legitimate military employment of laser systems, including laser systems used against optical equipment, is not covered by the prohibition of this Protocol." The United States follows this protocol. (Freedman, 2001)

HPM weapons were recently discussed in *Military Technology*:

> Investigation of the interaction between HPM pulses and targets is still in its infancy. Whether vehicle-supported systems that focus HPM pulses on enemy tagets will damage their electronic components depends on the outcome of interaction studies. Viability of these systems depends on source efficiency, compactability, and antenna gain; the effect falls off as ($1/r^2$). (Grosch, 1999, p. 45)

d. Tank-fired Missiles

Except for the U.S. Army's Shillelagh missile of a few decades ago, most if not all tank-fired antitank missiles were produced by the former Soviet Union. Such missiles, which carried shaped-charge warheads, were susceptible to various countermeasures, especially reactive armor. Now, it seems reasonable to expect development of high-velocity KE missiles with heavy-metal, long-rod penetrators to defeat current and projected threat tanks both within and beyond line of sight. Such extended-range missiles would enable non-tank armored vehicles to engage targets beyond the direct fire zone, where they do not want to slug it out with enemy tanks. Section 9.2 contains more on beyond line-of-sight target engagement as it covers various forms of indirect-fire weapons, which could include tank-launched fiber-optic missiles.

2. Survivability

The survivability of armored vehicles on the battlefield involves these basic principles: remain undetected; if detected, avoid being hit; if hit, stop the penetration; and if penetrated, survive (Foss, 2001b; Nilsson and Falk, 1996):

> The most obvious way to prevent being hit is to minimise the possibility of detection by making the [armored vehicle] small and compact and as difficult to detect by a variety of battlefield sensors including radar, acoustic and electro-optical systems as possible.
>
> In practice many of today's [armored vehicles], especially MBTs, are very large and heavy but where possible designers are striving to reduce the size of future armored vehicles, with the twin incentives of not only enhancing their survivability but also making them easier to transport by air.
>
> This especially applies to Western countries that are now placing increased emphasis on the ability to transport equipment rapidly anywhere at very short notice. The key requirement is that equipment must fit into the widely-used C-130 Hercules transport aircraft.
>
> Alongside the air transport question, users also require higher levels of battlefield protection following a design policy of "fly light, fight heavy."
>
> [In possible combat scenarios,] even simple weapons can prove devastating. During fighting in Chechnya in 1995, the Russian Army lost over 250 vehicles, many to manportable RPG-7-type unguided anti-tank projectiles fired from very short range at the highly vulnerable sides and rear of their armored fighting vehicles (AFV) (Foss, 2001b, p. 21).

We look at three means for improving survivability: signature management, armor, and active protection.

a. Signature Management

Current and expected future threat scenarios require signature management measures of a multispectral type, and they require an extremely short reaction time—ideally zero. The priority requirement for armored vehicles is protection against terminally guided munitions and in particular top-attack protection. To a large extent, contemporary armored vehicles were designed when the current sensor threat was not foreseen (Nilsson and Falk, 1996).

> As a particularly blatant case, one could point at the abundance of external and extremely visible exhaust systems, which, in addition, are most frequently directed so that neighbouring surfaces are also heated-up to provide wonderful IR "beacons." Much the same applies to radar signature, which is often poor (i.e., excellent from the radar's point of view), and which becomes even worse when considering the amount of

external additional equipment and stores (track elements, spades, recovery cables, etc.) normally carried by an AFV under true combat conditions (a quick review of pictures and TV footage from the Gulf War is highly instructive in this respect). (Nilsson and Falk, 1996, p. 28)

Signature management can be divided into four basic categories: (1) design measures; (2) basic camouflage; (3) additional camouflage; and (4) temporary camouflage.

(1) Design Measures

To achieve reasonable cost effectiveness, design-related measures that focus on IR and radar aspects must be implemented in the vehicle's design and development.

> Unfortunately, comprehensive redesign of existing [armored vehicles] to improve signature management aspects is not a realistic possibility. As such, current efforts are focused on improving the situation through the adoption of additional camouflage. (Nilsson and Falk, 1996, p. 28)

(2) Basic Camouflage

Surface coatings, generally camouflage paint, affect the visible and near-IR spectrum. Future paint systems will probably be developed with middle- and far-IR characteristics:

> The aim of such a system is to increase the portion of reflected ground by lowering the emissivity. By giving the different colors different emissivity, pattern painting can be applied in such a way as to "break up" large surface areas having the same temperature. (Nilsson and Falk, 1996, p. 28)

Breaking up the visual outlines of personnel and equipment is as important as the use of color (Gander, 2000a).

(3) Additional Camouflage

This category includes both standard and general-use material such as nets and coverings, as well as vehicle-specific add-on systems. Such systems will likely focus on wideband multispectral protection, low weight, and easy-to-handle material that will not get stuck in protruding parts:

> A mobile, object-adapted camouflage system may contain both coverings for IR camouflage and nets with radar-absorbing characteristics, depending on the type and nature of the platform and its inherent signature(s). A mobile system also implies that the camouflage must remain in place at most…times, which dictates that it does not affect other functions. (Nilsson and Falk, 1996, p. 28)

(4) Temporary Camouflage

Vegetation provides excellent multispectral protection in forests and woods and, to a lesser degree, when carried by vehicles.

> A recent discussion of signature management for the future revealed that (1) efforts are ongoing to develop coatings with a chameleon effect and techniques to defeat hyper-spectral sensing and emerging threats; and (2) databases of backgrounds, color, texture, and reflectance of the terrain in various world areas are being expanded in order to deploy appropriate signature management solutions anywhere at any time (Atkinson, 2000).

Unfortunately, the report gives no details nor any hint of prospects that the chameleon effort will have any success.

b. Armor

The main battlefield threats against tanks are antitank guided missiles (ATGMs); unguided antitank rockets and grenades; shaped charge HEAT gun rounds; KE gun rounds; and top-attack weapons (intelligent submunitions, terminally guided artillery rounds, etc.).

> Of these, the redoubtable effectiveness of light anti-tank weapons stems from their high saturation on the battlefield and the possibility of surprise/concealed use, plus their capability for attacking tanks at very short distances and from virtually any direction. This is a particularly significant aspect in local and low-intensity conflicts, and most specifically in peacekeeping operations. It should be appreciated in this context that despite all the advances in armor protection, an average anti-tank grenade will have no insurmountable difficulties in achieving penetration when fired from outside the 60–80° frontal arc.

> The development of ATGMs has kept them constantly abreast of advances in armor protection, particularly because appropriate employment tactics can be formulated calling for the tanks being fired at from any direction and not necessarily through the optimally protected frontal arc. Furthermore, the introduction of long-range ATGMs (up to 6–8 km) for helicopter launch has placed tanks at a distinct disadvantage, due to the lack of adequate means to engage either the platforms or the ATGMs themselves. (*Military Technology*, 1997, p. 39)

Enhancing tank protection through improved or thicker armor and/or lower detectability meet some basic limitations:

> A further qualitative "leap-forward" in the overall protection level as offered by passive armor cannot be expected in the near future. Furthermore, as already indicated the mass of latest-generation tanks already approximate the feasibility limit; and even so, an acceptable level of protection against contemporary anti-tank weapons can only be provided in the 60–80° frontal arc.
>
> The concept of protection being optimised in a frontal arc, which to a considerable extent still dominates MBT design, is a legacy of the times when tanks were mainly intended to break through well-organised linear defences, and the bulk of enemy fire was thus logically expected to come from within a restricted sector along the tanks' own line of advance. The situation, however, is quite different with high-mobility battles fought deep inside enemy-held territory, as well as when tanks are used in local conflicts and peacekeeping operations, i.e., under conditions whereby there is no enemy "front line" as such and combat operations are often conducted in built-up areas. In such combat situations, *all* fire sectors have practically the same importance and probability, and accordingly protection must be of a near-perimeter character. Indeed, given that the tank's weak spots in the sides and rear are well known, the enemy would most certainly try to direct its fire exactly at these vulnerable places. (*Military Technology*, 1997, p. 39)

Thus, there is a worldwide interest in new types of armor to improve the protection of tanks against current and future threats. One type is further development of explosive reactive armor, and others include different forms of electric armor (Ogorkiewicz, 1997a).

(1) Explosive Reactive Armor

The original type of explosive reactive armor was designed to defeat shaped-charge antitank weapons; this early explosive reactive armor consisted of sandwiches made with steel plates, which were generally 2–3 mm thick (Ogorkiewicz, 1997a). The introduction of explosive reactive armor in the 1980s improved the armor protection of tanks against shaped-charge warheads more effectively than rolled homogeneous steel armor of equal weight:

> This improvement, however, has been rapidly countered by the development and widespread distribution of tandem warheads, capable of effectively overcoming ERA tiles. Moreover, reactive armor cannot be applied to provide adequate protection for the tank's entire outer surface and vulnerable points (vision devices, joints and other shell traps, etc.). Besides, an exploding ERA tile (even assuming that no sympathetic detonation of near-by elements will occur) will by definition uncover a considerable area of the main armor; in other words, reactive armor can only provide protection once against attacks coming from a given direction. (*Military Technology*, 1997, p. 40)

The original (or "light") explosive reactive armor was not effective against high-velocity KE projectiles of tank guns. "Heavy" explosive reactive armor with much thicker steel plates was developed in Russia. The increased protection that explosive reactive armor provided against APFSDS projectiles—a Russian-claimed 70-percent greater effectiveness than solid steel armor of the same weight—could not be extended to its use on lighter armored vehicles:

> While ERA sandwiches can considerably reduce the armor piercing capabilities of shaped charge jets they cannot destroy them completely. What remains can be resisted by the relatively thick armor of tanks but not by the much thinner plates of light armored vehicles. Moreover, the flying rear plates of ERA sandwiches can themselves cause serious damage to lightly armored vehicles. (Ogorkiewicz, 1997a, p. 50)

In developments up to 4 years ago, various types of explosive reactive armor—light, heavy, locally reacting, and hybrid—have been fitted to vehicles that pre-dated explosive reactive armor. Thus, it could be only used as appliqué armor instead of being fully integrated with the vehicle. Further development would involve incorporating explosive reactive armor from the start in tank design:

> In principle, the integration of ERA into the design of tanks amounts to splitting their armor into outer and inner layers and spacing them well apart, so that ERA sandwiches can be installed between. Such an

arrangement protects the sandwiches from damage by small arms, shell fragments and other means and reduces the danger around tanks due to the flying plates and blast, which can be vented upwards. Moreover, it allows the use of explosives that are detonated by long-rod penetrators and not only by shaped charge jets, like the explosives used in the add-on, light type of ERA which have to be far less sensitive.

To be effective against long-rod penetrators, plates of integrated ERA sandwiches must still be relatively thick to impart sufficient transverse momentum to the rods to deflect and to break them. However, a fine balance has to be struck between making the front sandwich plates heavy enough to be effective against the penetrators and not too heavy to be contained by the outer layer of armor. The impact of the rear plate on the inner layer of armor is less of a problem and can be reduced by making the sandwiches asymmetric, so that the rear plate is significantly thinner than the front plate.

Making the front plate thicker also helps to prevent premature detonation of the explosive interlayer by minor threats. Given optimized designs, integrated ERA offers future tanks highly effective protection both against the penetrators of APFSDS projectiles and the jets of shaped charge weapons (even those with tandem warheads). (Ogorkiewicz, 1997a, p. 51)

Figure 9.1-3 shows a diagrammatic representation of integrated explosive reactive armor.

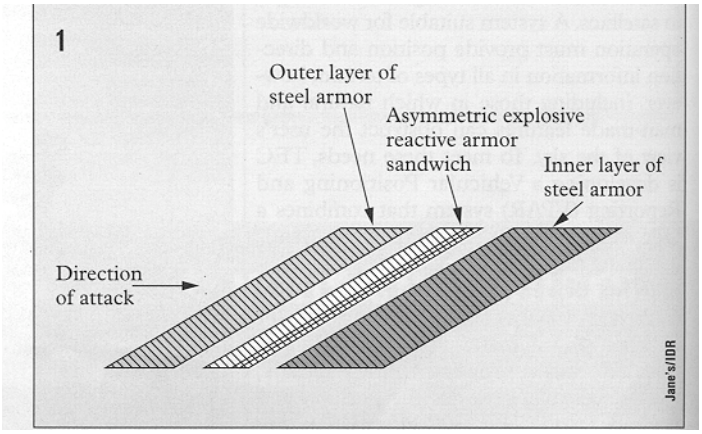

Figure 9.1-3. Diagrammatic Representation of Integrated Explosive Reactive Armor (Source: Ogorkiewicz in *Jane's International Defense Review*, May 1997)

(2) Electric Armor

Research into electric armor, or "smart armor," has taken at least three different forms, the earliest of which is electromagnetic armor. The electromagnetic armor has two widely spaced plates, one of which is connected to a high-voltage capacitor bank while the other is grounded (Figure 9.1-4). In an attack, a shaped-charge jet penetrates the plates and acts as a switch between them. That action triggers an electrical-energy discharge, which causes a large current to surge through the jet. Magnetomechanical instabilities in the jet lead to its break-up and drastically reduce its penetration capability:

Electromagnetic armor of this kind has come to be considered for use against the long rod penetrators of APFSDS projectiles as well as shaped charge jets. As in the case of the jets, passage through the penetrators of very large electrical currents also causes fluctuating and distending instabilities which can lead to their disruption. (Ogorkiewicz, 1997a, p. 51)

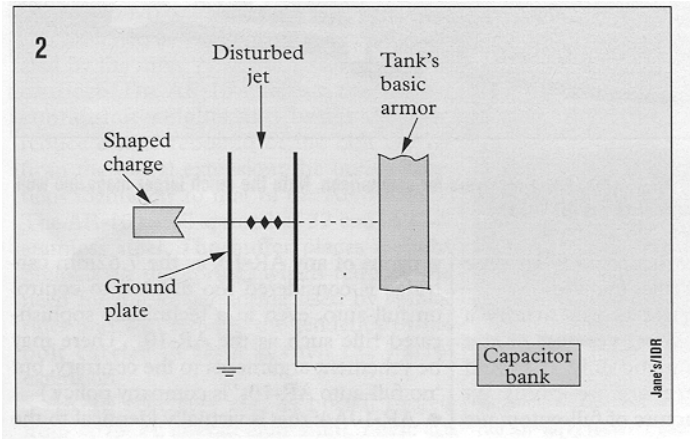

Figure 9.1-4. Principle of Electromagnetic Armor
(Source: Ogorkiewicz in *Jane's International Defense Review*, May 1997)

Unlike the first form, the second type of electromagnetic armor is not self-activating. It "requires the detection of attacking long rod penetrators or missiles a short distance from their target" (Ogorkiewicz, 1997a).

> Once this has been done by some multi-sensor detection system, a computer-based control unit closes a switch which sends a surge of large current from a capacitor bank to the pancake coil of an induction type plate launcher. This projects a plate in the path of the incoming penetrator missile to collide with it and thereby break or at least deflect the former and to disrupt and detonate the latter. (Ogorkiewicz, 1997a, p.51)

The basic elements of an active electromagnetic system are shown in Figure 9.1-5.

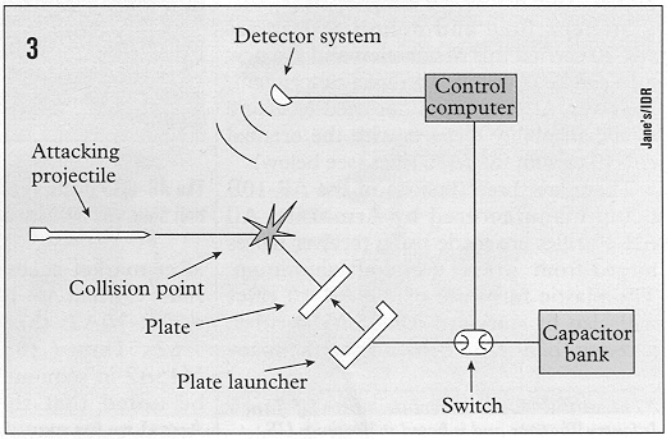

Figure 9.1-5. Basic Elements of an Active Electromagnetic Armor System
(Source: Ogorkiewicz in *Jane's International Defense Review*, May 1997)

The third type of electromagnetic armor is electrothermal. As in the original electromagnetic armor, it has "pairs of metal plates one of which is connected to a capacitor bank while the other is grounded":

> But the plates are smaller and separated by a relatively thin layer of insulating material instead of a sizeable air gap. When a pair of plates is pierced by a shaped charge jet or a kinetic energy penetrator there is a surge of electrical current from one plate to the other. This causes the insulating layer to expand explosively, throwing the plates apart. Electrothermal armor is therefore self-actuating and acts against jets or penetrators in much the same way as explosive reactive armor. (Ogorkiewicz, 1997a, p. 51)

Operation of any electromagnetic armor systems in which the vehicle ejects plates in order to damage or destroy incoming missiles or projectiles at a safe stand-off distance clearly requires the tank to carry high-voltage capacitor banks to provide considerable electrical energy:

> For example, active electromagnetic armor which launches plates heavy enough to be effective against the penetrators of current tank gun projectiles might have to generate 1 MJ of kinetic energy per plate. Given

an efficiency of 20 per cent for the plate launcher, this calls for a 5 MJ capacitor bank. At the present level of energy density of pulse power supplies of about 1 MJ/m^3, such a capacitor would occupy 5 m^3, which is equal to a third of the internal volume of a tank. (Ogorkiewicz, 1997a, p. 51)

Another analysis of electric armor had the following assessment of active electromagnetic armor:

The energy necessary for accelerating such a mass element is difficult to calculate, since—apart from air resistance—in particular the dynamic effect between the vehicle-mounted spool and the spool of the plate element depends on the stand-off, and drastically diminishes as the plate moves away. The velocity of the plate does not have a decisive influence on its effectiveness; rather, the required velocity to achieve an intercept depends to a far greater degree on the detection power of the sensor system. Because of this, from the standpoint of integrating the system in a vehicle, major problems should be expected with respect to the power supply.

Assuming a plate mass of 30 kg and a velocity of 300 m/s, with a degree of effectiveness of 0.25 the energy requirements comes to 5.4 MJ. Thus, both from the integration standpoint (weight and volume of the energy supply) and the operational perspective (e.g. the time necessary for charging the energy storage cell), a sensible vehicle application would not appear to exist. Only once a sensor system has been achieved that is capable of detecting incoming projectiles with a sufficient early warning margin, identifying them and calculating their present and future position with such precision, that protective elements traveling at a velocity of no more than 60 m/s are adequate, will it be possible to reduce energy requirements to 216 kJ. This would mean that a KE projectile with a velocity of 1,500 m/s would have to be detected with great precision approximately 70 m prior to reaching the vehicle, enabling the properly-oriented protective element to be triggered and to intercept the projectile roughly 2 m away from the vehicle. (Grosch, 1999, p.45)

(3) Material

Increasing the level of protection on a vehicle involves considerations of cost and weight. Design trade-offs involve level of protection, weight, area of coverage, and cost. High-performance armor systems generally use advanced materials that provide low-weight armor, but these are likely to cost more than simpler materials (Carroll, 1996). Figure 9.1-6 shows performance versus cost relative to high-hardness steel armor of armor materials to defeat 7.62 NATO armor-piercing rounds.

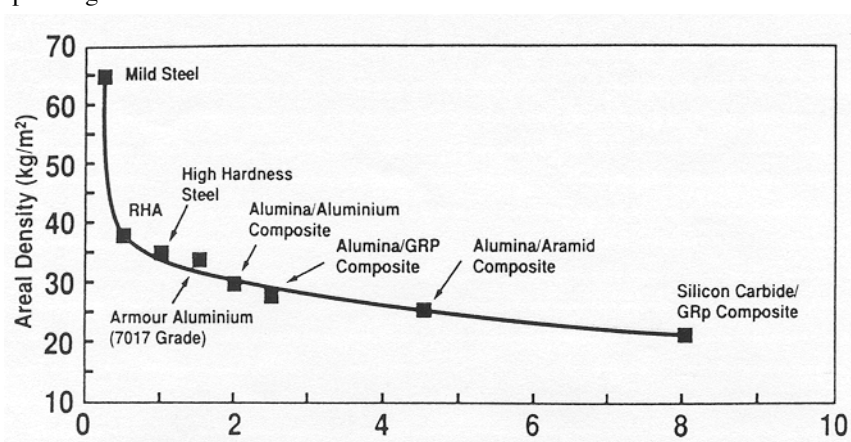

Figure 9.1-6. Protection Performance Versus Cost for Various Armor Materials to Defeat 7.62 NATO Armor-Piercing Rounds Relative to High Hardness Steel (Source: Carroll in 1996 *Defense Systems international*)

Since the early 1960s, cast or welded steel armor has been supplemented by composite, advanced, laminated, or special armors (Biass and Richardson, 1997). These new armors include spaced armor, DU armor, and explosive reactive armor. All of these have a common denominator: they are as good as, but lighter than, conventional rolled homogenous armor plates (Nilsson and Falk, 1996).

Composites have been used as structural materials in military aircraft and naval vessels for many years. Composites' increased mechanical performance obtained at a lower weight has been the driving force for their use when component weight is a critical factor. The main advantages of composites compared with traditional steel and aluminum used for armored fighting vehicles include

- Increased structural performance at equal ballistic protection;
- Reduced back armor spallation;
- Elimination of parasitic mass leading to a weight reduction;
- Excellent corrosion resistance;
- Inherent thermal and acoustic insulation properties;
- Reduced parts count (French, 2000).

A recent journal discussed the ballistic performance of composite armor:

> When exposed to certain ballistic threats, fiber composite armor materials are better than metals because of their high strength-to-weight ratio (specific strength). Ballistic impact is a complex phenomenon, and other properties such as fibre modulus and elongation to break of the individual components of the composite are also important in determining the overall performance of the composite material. The energy absorption mechanisms of composites subjected to low-energy impact with low-strain rates are not the same as with high energy/velocity impacts where, because of the high strain rate, the composite does not have time to bend under the impact load. The high strain rate can also change the mechanical properties of the fibre and matrix, with most fibres showing increased strength and modulus but lower elongation to break at high strain rates.
>
> Composite laminates have been shown to be particularly effective in resisting hard steel fragments produced by artillery shells and the previously mentioned spall. The advantage of composites against this type of threat has led to their use in body armor systems and protective helmets as well as for external panels or spall liners inside AFVs. Field trials have shown that composite materials also display a reduction in behind-armor effects against shaped charge (HEAT) rounds compared with metallic structures. Although the jet of a shaped charge is very hot, it is unlikely to ignite a composite hull because it penetrates the material in a fraction of a millisecond, providing insufficient time for the surrounding material to become ignited.
>
> Against AP projectiles, composites provide lower ballistic protection compared with metallic armor. However, when composites are combined with other materials such as steel or ceramic tiles an effective system against AP projectiles can be produced. The steel or ceramic positioned on top of the composite presents a hard face to the projectile which erodes or shatters, the resulting fragments being absorbed by the backing composite. The selection of the hard face material has many implications on the design of the vehicle. Ceramic tiles are usually positioned on top of a composite structure, below an outer thin spall layer of composite material. The use of a composite combined with ceramic tiles can produce a significant reduction in hull weight for the same ballistic performance, compared with current monolithic aluminum hull vehicles. However, if the requirement for a vehicle's armor is to withstand a multi-hit threat, the use of composite ceramic armor materials will be limited because of the brittle nature of ceramics. Nevertheless, composite ceramic structures are being examined by a number of countries including the United States, where for a specific ballistic threat, vehicle weight savings of around 27% have been claimed for a composite ceramic vehicle in comparison with one having an aluminum hull, a spall liner and metallic armor. Such weight savings cannot be achieved if the multi-hit capability is increased by using a composite metal armor. However, by attaching metal armor to a composite vehicle, the armor can be easily removed or replaced, giving a modular vehicle design. (French, 2000, p. 52)

In an effort to reduce vehicle weight while maintaining current levels of firepower, protection, and mobility, the use of fiber-reinforced composites as the hull structure material is being evaluated in several countries (French, 2000).

Composite armor was developed in 1962 to increase the survivability of U.S. Army helicopters in Vietnam. Extending such usage to light combat vehicles was not implemented until the 1990–91 Gulf War, when add-on (appliqué) armor was fitted to Marine LAVs. Since then ceramic armor has been used more widely for light combat vehicles, particularly those involved in operations in Bosnia and Kosovo. Composite armor increases the effectiveness of ceramics against shaped-charge warheads (Ogorkiewicz, 1996). Steel and aluminum are slowly giving way to ceramic and explosive reactive armor (Burley, 2000b). Figure 9.1-7 shows a cross section of composite armor with a ceramic laminate. For effective plate action, the sandwich plates must be oblique to the direction of attack and, to provide space for movement of the rear sandwich plate as well as for the break-up of the jet or penetrator, at a distance from the main armor.

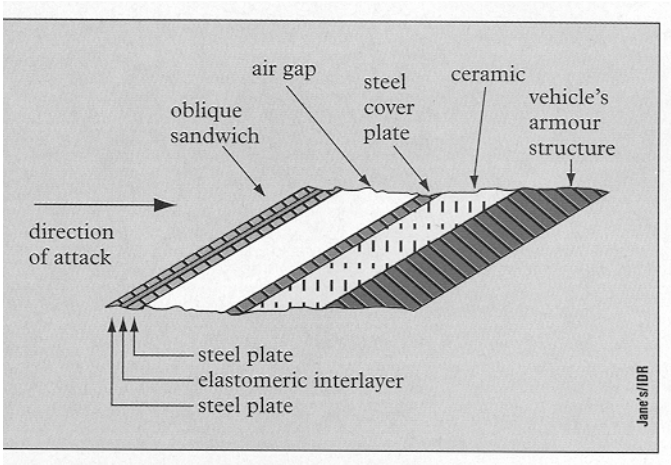

Figure 9.1-7. Composite Armor Cross Section
(Source: Ogorkiewicz in *Jane's International Defense Review*, September 1996)

"Em" is the ratio of the crack density of conventional steel armor (RHA) required to defeat a given threat to that of the armor inquisition. Against a common threat, 7.62-mm or 12.7-mm armor-piercing or even 30-mm APDS (armor-piercing, discarding-sabot) projectiles, the mass effectiveness (Em) of monolithic ceramic armor ranges from 2.5 for ordinary alumina to 3.5 for the hardest ceramics.

> Ceramics cannot be used by themselves but are applied on to the steel or aluminum armor hulls and turrets of combat vehicles which provide them with the necessary backing. The Em of the resulting combinations is inevitably lower than if ceramics were used by themselves because of the lower effectiveness of the metallic armor backing them. Nevertheless, Em of the composite armor can still be more than two somewhat higher values, [which are] generally obtained when ceramics are combined with aluminum armor rather than steel. This means that the use of ceramics offers light combat vehicles twice the ballistic protection provided by homogeneous steel armor without increasing weight. (Ogorkiewicz, 1996, p. 64)

The preceding discussion talked about shaped-charge and armor-piercing/APDS projectiles. Another type of threat against which ceramic armor is used is the long-rod penetrator of APFSDS projectiles. Such penetrators generally consist of tungsten alloys with a typical density of 17,600 kg/m^3 and Vickers Hardness (VHN) of 420, or of DU, which has a density of 18,600 kg/m^3 and VHN of about 400.

> To defeat such a threat, ceramics have to be relatively thick, and this puts them into the category of "heavy" ceramic armor together with those used against shaped charges, and sets them apart from the "light" ceramic armor used against AP bullets. Several ceramics have been considered for use against long-rods but the types most likely to be used, if only for economic reasons, are again alumina.
>
> The impact velocities of long-rod penetrators are considerably lower than those of shaped charge jets, being typically in the region of 1,500–1,800 m/s. Nevertheless, their penetration of ceramics resembles that of the jets and they are also defeated primarily by erosion. Although the penetration of long-rods can be regarded in terms of hydrodynamic flow it is, like that of shaped charges, affected by the strength as well as the density of the ceramics.
>
> In consequence, their Em is again higher than simple hydrodynamic theory would indicate—in fact, values of Em of the order of two or even three have been quoted. However, this applies to blocks of ceramics which have been confined laterally by a considerable thickness of steel, and such confinement is bound to result in much lower Em values for the combined ceramic-steel systems.
>
> Em values of unconfined ceramics are also lower, falling in the range of 1.4–1.6 against long-rods at the current velocities of 1,500–1,800 m/s. This is of the same order as the Em of titanium armor against long-rods, but even the lower values of Em allow ceramics and ceramic-steel composite armor to enjoy a significant advantage over conventional steel armor. (Ogorkiewicz, 1996, p. 65)

(4) Design Changes

Improving survivability can be the driving force for configuration changes in traditional concepts for new armored fighting vehicles and for modifications in existing vehicles. A major change for armored fighting vehicles

would be adoption of the crew-in-hull concept. This concept involves seating a two-man crew side-by-side at multifunction stations in an MBT or MICV down in the hull rather than in an all-round traverse turret. This concept assumes that new armored fighting vehicle development will follow Russian and later French leads in adopting automatic loading. Driving controls, gun-laying controls, and indirect sighting displays would be provided at each station. Electronics would take over the gunner's functions of tracking and laying crosshairs on the target. Automation of the fire-control functions makes it possible to operate with only a vehicle commander and driver. Advanced fire-control systems would be based on an extensive vetronics package. The crew-in-hull concept was discussed further in an October 1994 *Military Technology* article:

> The main reason usually quoted for moving the crewmen down into the hull is to increase their survivability by seating them in better protected stations. In the case of the MBT, a further significant reason is to reduce the size of the target presented to the enemy when engaging over a crestline. In the case of the MICV, the crew-in-hull concept will eliminate the turret basket which so restricts the infantrymen's movement within the vehicle. An additional reason will be to reduce the MBT's and the MICV's height and prominence. This might be achieved by using configurations based on the "S" tank, but would be spoiled by a high external overhead gun mounting.
>
> By moving the crewmen down into the hull and allowing each man to drive the vehicle, it will be possible to eliminate the dedicated driver and reduce both MBT and MICV crews to two men. In the MBT, reduced crew volume can give better protection and only two crewmen need be put at risk in action. Far from reducing a vehicle's efficiency and speed of reaction, such two-man operation is likely to give better operational performance than present four- or three-man turreted tanks. In the case of the MICV, a two-man crew will allow an additional infantryman to leave the vehicle to take part in dismounted action.
>
> The introduction of night vision devices making round-the-clock operations possible means that it will be necessary to replace a two-man crew after 24 hours—or 48 hours at the utmost. A preferable alternative in the case of the MBT will be to carry an additional crewman in a slightly larger vehicle, who would rest off-duty before relieving one of the two crewmen operating the vehicle. The MICV would not need to adopt this "two-man operation and three-man crewing" system as it contains more than enough manpower to provide relief crewmen. (Fletcher, 1994, p. 35)

In view of the plans of major Western nations to stay with their M1A2, Merkava, Leopard 2, LeClerc, and Challenger MBTs for 20–30 years, it seems unlikely that we will see development of a crew-in-hull tank very soon.

Israel has made configuration changes to its Merkava MBTs, a number of which have been hit during 17 years of almost continuous employment in Lebanon and in the security zone outside northern Israel:

> Inevitably, despite their armor, some Merkavas have been perforated by hostile weapons. But because of the location and configuration of the fuel tanks, the elimination of hydraulics by an all-electric turret and gun drive, and unique system of ammunition protection, no Merkava crewmen have ever been burnt. This is in striking contrast to the experience with other tanks in which burns account for about 25% of all crew casualties.
>
> The protection of the ammunition consists of individual containers for the 120 mm tank gun rounds which are of an ingenious, composite construction.
>
> They contain a special material which reacts when they are exposed to heat, slowing down the transfer of heat to the rounds and thereby delaying cook-off. The protection is so effective that explosion of the rounds is delayed by about three quarters of an hour even when the temperature in a burning tank reaches between 600 and 1,000°C, which gives the crew time to evacuate the tank. For comparison, unprotected rounds can explode within 20 sec when their temperature goes up to 170°C. (Ogorkiewicz, 2000a, p. 55)

Armor of APCs (armored personnel carriers, the most common of which is the M113) "provides protection against little more than soft-cored 7.62-mm ball ammunition and shell splinters. The need to improve APC survivability is urgent when deployed in peacekeeping operations where reduction of casualties is important for humanitarian and political reasons" (Ogorkiewicz, 1997b).

The various add-on armors significantly improve the survivability of APCs, providing them with protection not only against 7.62-mm armor-piercing rifle bullets, but also against 12.7-mm and even 14.5-mm heavy machine gun bullets fired at battle ranges. They also reduce the effects of APC armor being perforated by hand-held shaped-charge weapons of the RPG–7 type. However, to protect APCs against such weapons requires the use of explosive reactive armor and hybrid forms of it suitable for installation on M113 carriers and other lightly armored vehicles.

c. Active Protection

In the foreseeable future, tanks will need, as they do today, an IR detector, a target identification system, a laser warning system, a radar warning receiver, and a device to coordinate their signals and instantaneously control a countermeasures suite (Richardson, 1998c).

These countermeasures fall into two categories: soft-kill systems and hard-kill systems. The former make the attacking munitions miss their targets without damaging them. The latter are designed to destroy threats before they reach their targets or damage them so that their effectiveness is reduced.

(1) Soft-Kill Systems. Armor plating is near its limit in terms of weight. Moreover, no matter how good, the armor of armored fighting vehicles will be overmatched by some threats. Active protection relies on detecting the approaching threat and then launching some type of attack munition. Thus, threat warning or detection systems are a prerequisite to hit avoidance. Sensors must detect powered missiles, which make reasonable IR or electro-optical targets, and unpowered missiles such as electro-optical-guided bombs or smart mortar rounds. The sensors must discriminate between true and false targets. And they must discriminate between missiles or other rounds that threaten the vehicle being protected and those that will miss or are aimed at other targets (Biass and Richardson, 1997; Ogorkiewicz and Hewish, 1999; and Burley, 2000a).

Laser warning receivers (LWRs) combined with smoke-grenade launchers are used against laser-beam-riding missiles. Infrared decoys or jammers were developed to counter optically guided ATGMs or SACLOS (semi-automatic command to line of sight) guidance. These decoys or jammers draw the IR trackers away from the missile's flares and induce the missile-control system to send false signals so that the missiles miss their targets. There are doubts about the future effectiveness of decoy beacons because of the development of SACLOS guidance systems with coded missile flares. Moreover, like LWRs with smoke-grenade launches, systems based on IR decoy beacons are threat specific (Ogorkiewicz and Hewish, 1999).

Another type of countermeasure is also threat specific. It detects the beam of a laser designator and sets up a false target for the threat seeker by illuminating a spot on the ground away from the targeted vehicle. To be successful, however, the laser decoy system must operate in the same wave band and at the same pulse-rate frequency as the designator, which is not easy to determine (Ogorkiewicz and Hewish, 1999).

Another use of lasers as countermeasures has been described:

> Lasers dazzle the operators or electro-optical sensors of hostile anti-tank weapons. To do this, the laser has to be combined with high angular resolution detectors to achieve the necessary pointing accuracy. The energy levels involved in this can be relatively low and should not cause permanent damage. However, more powerful lasers are likely to damage electro-optical sensors permanently and blind hostile missile operators and gunners; because of this there are strong political objections to laser-based directed energy weapons. However, there should be no objection to the use of lasers to disrupt the tracking functions of missile seekers, and directed IR countermeasures such as the Northrop Grumman/Marconi Nemesis being developed for the protection of helicopters against heat-seeking missiles. Similar countermeasures have been proposed for tanks. (Ogorkiewicz and Hewish, 1999, p. 32)

Since the soft-kill systems described above are threat specific they would all have to be carried on a vehicle to gain protection against more than one part of the electromagnetic threat spectrum.

(2) Hard-Kill Systems. The Soviet Union deployed the first operational active protection system (APS), Drozd (Thrush):

> Drozd used primitive millimeter-wave radar sensors, one on each side of the [T–55] turret, to detect incoming rounds. A filter in the radar processor was intended to ensure that the system responded only to targets flying at speeds typical of anti-tank guided missiles. These would be engaged by one or more short-range rockets carrying fragmentation warheads, fired from four-round launchers (one each side of the turret).
>
> Drozd suffered from several shortcomings. It seems unlikely that the radar was able to determine threat levels adequately, and the self-defense rockets would almost certainly have caused unacceptably high levels of collateral damage—particularly to accompanying dismounted infantry. The system was also reportedly very expensive, costing several times as much as the tank itself. (Hewish and Ness, 1996, p. 34)

Russia's second-generation hard-kill system, called Arena, which was revealed in 1992, was designed against missiles traveling at 70–700 m/sec:

Like Drozd, [Arena] uses millimeter-wave radar to detect and track approaching missiles…its radar consists of one six-module unit mounted on a stalk on top of the tank turret and covers a much larger arc than Drozd's two units.

Arena's kill mechanism is also different from that of Drozd. It consists of 22 or 26 fragmentation cassettes in a collar-like armored rack mounted around the tank turret and covering an arc of 220 deg.

The radar detects any missile which comes within 50 m of the tank and then tracks it until it is within 20 m. By then the system's control unit determines which of the cassettes should be launched and when.

The selected cassette is ejected out of the rack, set at an angle of 20–40 deg, by a powder charge attached to it, which is fired by a signal from the control unit via an umbilical cord. While the cassette is in flight the control unit recalculates the time when it should be detonated. It also sends signals to the small impulse motors incorporated in the cassette to turn it so that its fragments will aim directly at the incoming missile when it is finally detonated by another signal, by which time the missile is 3–5 m from the tank. Detonation of the cassette sends a shower of fragments at the missile which either throw it off its course or damage it, reducing its armor-piercing capabilities.

The whole Arena system was originally stated to weigh 800 kg, but more recent statements put its weight at 1,000 kg. Nevertheless, Arena has been mounted not only on T–80U tanks but recently also on a BMP–3 infantry fighting vehicle. The Russians have tested the Arena against a number of ATGMs equivalent roughly to the U.S. TOW and Hellfire, and claim that it would increase the survivability of tanks by as much as a factor of two. They have also tested it against RPG–7 anti-tank grenades and claim that it would be particularly effective in local conflicts where such weapons might be used, as they were in Chechnya.

The potential effectiveness of Arena is also recognized outside Russia. This is indicated by the effort now being devoted in the United States and elsewhere to the development of shaped-charge missile warheads with very long standoffs, which would be effective if initiated outside the 3- to 5-m range of Arena's fragmentation cassettes. (Ogorkiewicz and Hewish, 1999, p. 35)

Figure 9.1-8 shows a sketch of the mast-mounted radar of the Arena system detecting an incoming missile. Arena's control unit cues the firing of a munition "plate," which was earlier described as electromagnetic armor. An umbilical linking the munition to the tank carries the signal when to detonate (Hewish and Pengelley, 1996).

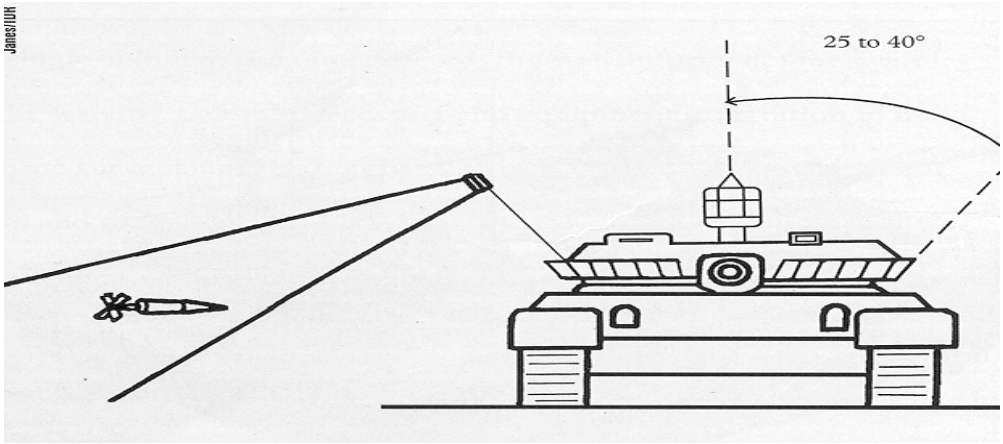

Figure 9.1-8. Sketch of the Arena Active Protection System (Source: Hewish and Pengelley in *Jane's International Defense Review*, March 1996)

Figure 9.1-9 is an artist's drawing of a notional future MBT with a "birdcatcher" net being launched against a top-attack threat; a defensive round carrying an explosive warhead intercepting an incoming missile; and an armored bar, which might be launched explosively or by electromagnetic induction, impacting a long-rod penetrator (Ogorkiewicz and Hewish, 1999).

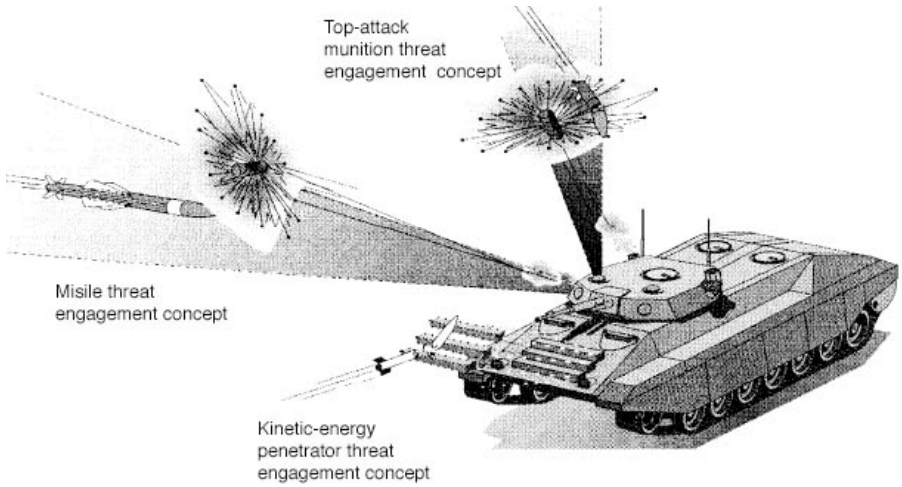

Figure 9.1-9. Notional MBT With an Active Protection System [Source: U.S. Army Armament Research, Development, and Engineering Center (ARDEC)]

3. Automotive Systems

This section covers diesel and turbine engines, electric drive, and all-electric vehicles.

a. Diesels and Turbines

Developers of armored fighting vehicles are expected to continue to want more power, lighter weight, a smaller package, and reasonably long life in propulsion systems. As in the past, propulsion development will follow two paths. The first is increasing power output of existing 4-cycle diesel engines by supercharging. The second is combining more power and increased power density in new designs. An example of the former is the power output of the MTU 883 Ka501 engine from 1,500 hp (1,108 kW) to 2,250 hp (1,662 kW) by the use of a more powerful supercharger and higher engine speed. With two-stage supercharging, the MTU 883 engine produced 2,600 hp (1,920 kW) in 1995 for the U.S. advanced amphibious assault vehicle, which is to be produced and deployed beginning in 2008. Another example is the boosting of the Perkins CV12 from 1,500 hp to 2,000 hp, with a power density of 77 hp/liter (28 hp/ft^3), which is expected to raise the power level to 100 hp/liter (37 hp/ft^3). In these and other cases, increasing power output involves much more than simply adding superchargers to an existing engine:

> With increased supercharging, more air is pumped into the engine. Pressures and temperatures go up and mechanical and thermal stresses of the engine's internal parts increase. Moreover, fatigue life is adversely affected. Assurance of developing a successful, reliable up-powered engine requires repeated tests incrementally staged to assess the impact of higher loading on the internal parts of the engine. (Lett, 1996b, p. 42)

The above power densities are for a bare engine. Power density for a complete propulsion system is much lower because the propulsion system includes everything needed to make the vehicle move. A more meaningful power density is based on the volume of the complete propulsion system, which includes the following items (Raffa, 2000):

- engine;
- transmission, including steering and brakes for a tracked vehicle;
- cooling system;
- air-filtration system;
- inlet and exhaust ducting;
- propulsion-control system;
- accessory-drive interfaces;
- batteries (for propulsion), and wiring harnesses;
- fuel tanks and plumbing (sized for mission requirement);
- final drives;

- maintenance access and clearances; and
- unusable volume.

The subset of the propulsion system that can be lifted or rolled out for replacement or periodic checks is the "power pack," which includes engine, transmission, air filtration, and cooling and control systems.

A recent U.S. Army Tank-automotive and Armaments Command (TACOM) briefing on propulsion technology uses sprocket horsepower per cubic foot (SPHP/ft^3) as the meaningful measure of installed propulsion power density (Raffa, 2000). Figure 9.1-10 shows potential propulsion power densities versus sprocket power and vehicle weight.

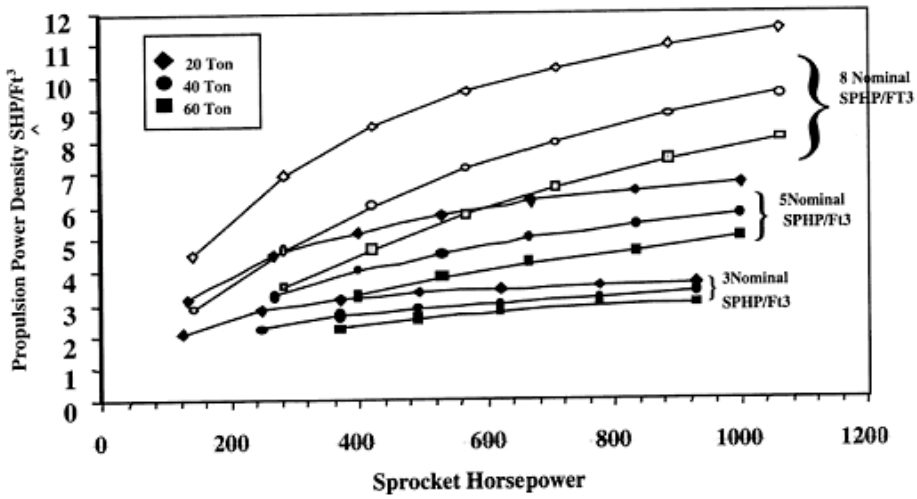

Figure 9.1-10. Propulsion Power Density vs. Sprocket Power and Vehicle Weight (Source: Raffa, 2000)

Research programs involving ceramic-propulsion technology are expected to result in power-density improvements in diesel engines (Raffa, 2000). Ceramic engines would also permit higher engine speed, reduce fuel consumption, and lower heat rejection.

When the advantages of a new-design engine exceed the performance and cost of an existing diesel, it is likely that the new engine will be put into production. However, the cost of producing a new design is such an obstacle that it is nearly certain that up-powered versions of existing diesel engines will see service for armored fighting vehicle applications (Lett, 1996b).

The French LeClerc MBT gets "extraordinary" acceleration performance by coupling its eight-cylinder conventional diesel engine to a turbine. This Hyberbar engine goes from zero to full power at 1,500 hp in 2.8 sec, while conventional diesels require 8–12 seconds (Klotz, 2000).

The quest for more compact power packs periodically leads to renewed interest in gas turbines, which currently power only the U.S. M1 and the Russian T–80 (Ogorkiewicz, 1997c). While there seems to be little motivation for manufacturers to start all-new engine-development programs in the near term, the LV100 is a new turbine engine recently specifically designed for ground vehicles. The LV100 is a follow-on to the AGT 1500 in the U.S. M1. It could be a power plant for a future MBT or an upgrade for the M1. The LV100 propulsion system is reported to occupy one-half the volume of the AGT 1500 system, and its fuel consumption at idle is also one-half that of the AGT 1500. There are other advantages to the LV100:

> The light weight of the turbine is a distinct advantage…the LV100 is 909 [to] 1,354 kg lighter than comparable diesels, in part due to the fact that the turbine does not require the cooling system of the typical diesel and has good cold-starting characteristics. The turbine's low noise and absence of smoke are also unique. Of all its characteristics, its reliability is probably the most important. The turbine has some 30% fewer parts than a comparable compression-ignition engine.
>
> The LV100 predicted reliability is 5,300 km between mission failures. Primarily due to its very reliable turbine engine, the M1A1 Abrams demonstrated availability of 90–98% during the Gulf War—a unique and significant performance. (Lett, 1996b, p. 45)

Because fuel consumption is a major impediment to operational utility, diesels remain popular for MBTs:

> A U.S. armored division required 1,700 tons of fuel per battlefield day, 40 per cent of which is consumed by the gas turbine-powered M1 tanks. This situation is rightly recognized as constituting a major impediment to operational mobility. The unfavorable consequences of high fuel consumption were clearly demonstrated during the outflanking movement of the U.S. VII Corps in the 1991 Operation Desert Storm. The rate of advance was governed not by the speed of its tanks but by the much slower speed of its encumbering supply trains.
>
> A major step toward achieving this fuel reduction requirement could be made almost immediately by retrofitting the M1 tanks with diesel engines. This was indicated by the competitive trials carried out in Sweden in 1994, during which, over a total distance of 3700 km, the gas turbine-powered M1 consumed twice as much fuel as the diesel-powered Leopard 2. In view of this it is not surprising that General Dynamics Land Systems has recently replaced the gas turbine with the MTU MT 883 diesel in the M1A2, which it is offering for export.
>
> In addition to being more fuel-efficient, the powerpack based on the MT 883 is also more compact than the gas turbine powerpack that it replaces. It is also more compact than earlier diesel powerpacks, including that based on the MTU MB 873, which powers the Leopard 2. (Ogorkiewicz, 1997c, p. 41)

b. Electric Drive

Tank transmissions change the speed-reduction ratio between the engine and the sprockets, thus varying the ratio of sprocket torque to engine torque. Redesigning tank transmissions, which are as large, heavy, and expensive as engines, would be a significant step toward reducing the size of power packs. The more compact, but less sophisticated, transmissions of Russian tanks contribute to the smaller size of their power packs. Electric transmissions, or electric drives, which replace hydromechanical transmissions, enable the engine to be decoupled from the final drive, improving the efficiency of engine operation (Ogorkiewicz, 1997c).

Major disadvantages of hydraulic systems are

- high energy consumption;
- extensive maintenance work, especially after storage;
- high volume and heavy weight;
- hazardous for the crew due to risk of fluid leakage; and
- malfunction under extreme environmental condition.

Major advantages of electric drive are

- low life-cycle cost and maintenance free;
- low power requirement, long operating time from battery, “silent watch”; and
- excellent protection of the crew (no fire risk, low IR signature).

The advent of new magnetics for the drive motors and the high-power semiconductors have made electric drive the choice for all modern MBTs in the western world except the M1, which still has hydraulic drive (Irgens, 2000).

The change to hybrid-electric propulsion is expected to double the vehicle range and permit stealthy operation in which the vehicle is powered by battery alone (Pengelley, 2000d). Operation of the hybrid-electric drive of an advanced development version of the BFV, which had a 275-kW PGU (power generation unit) consisting of a 350-hp diesel and two battery packs with a total of 88 lead-acid batteries, was described recently:

> Power from the PGU and/or the batteries is delivered through a converter assembly incorporating IGBTs [isolated gate bipolar transistors] to two separate motors each connected to a track sprocket. The motors, which are basically the same as the generator, are of the high-speed AC induction type each rated at 410 kW.
>
> The principal intended mode of operation is for the PGU to cater for the “average” power demand and for the battery packs to meet the transient peak power demands which arise when the vehicle is accelerating, hill climbing, or steering. Such an arrangement allows the use of a smaller engine, which can be run more efficiently, and yet results in no loss of performance. For instance, the hybrid BFV is expected to accelerate from 0 to 32 km/h in 6 s whereas the standard [air defense] version requires almost 8 s, in spite of having a larger, 500 hp diesel.

> The alternative mode of operation is to switch off the engine and to operate entirely on the batteries. This enables the vehicle to maintain long periods of "silent watch" with a much reduced thermal and virtually no acoustic signature.
>
> The vehicle can also be driven on batteries, for a short distance at least, and when it is fitted with rubber band tracks it can then move relatively silently. Such stealthy operation resulting from the combination of battery drive with band tracks is being cited as a major potential advantage of hybrid electric drives, particularly for reconnaissance or scout vehicles. (Ogorkiewicz, 1999a, p. 36)

Energy storage is an important part of hybrid electric drive systems. Development of lithium-ion and other high-energy-density batteries could provide one form of electrical energy storage. Capacitors and flywheels are other options. In particular, the magneto-dynamic storage (MDS) system uses a flywheel to store kinetic energy. The MDS flywheel is a high-speed rotating accumulator with an integrated electric machine that can function as a motor (charging the accumulator) or as a generator (discharging it) (Grosch, 1999). MDS is already used in urban buses operating in Germany (Ogorkiewicz, 1999a).

c. All Electric Armored Fighting Vehicle

A fundamental step in designing a diesel-electric drive involves coupling a high-power-density motor with a magneto-electrodynamic (MED) generator and replacing the infinitely variable mechanical transmission with a similar electromechanical model. The MED generator is a prerequisite for other major power consumers:

> With this concept, two fundamental advantages of the electric drive can be realised: namely, driving with optimum power exploitation or with lowest possible consumption, an infinitely variable torque-variable speed gear with improved driving dynamics and driving comfort, as well as drive-by-wire and the flexible installation of the power generator. (Grosch, 1999, p. 40)

The combination of electric drive and electric-energy accumulator can enhance armored fighting vehicle performance in ways not possible with a conventional diesel-mechanical drive:

- Sudden fast driving out of cover;
- Faster acceleration at all speed ranges and in all types of terrain;
- Silent "stealth" mode and drive ability without using the diesel engine;
- Deep wading (driving underwater) without any connection to external air;
- Supply of all systems in surveillance mode (low noise, no exhaust);
- Supplying power to electric weapons and electric armor systems;
- Charging and fast recharging of weapon pulsed power storage.

> Both batteries and kinetic energy accumulators can be used as energy accumulators. The latter—referred to as magnetic-dynamic accumulators—are especially suitable for use in vehicles. (Grosch, 1999, p. 42)

Technology that is either available today (sensor systems and information electronics) or currently in different stages of development (electric drive, electric weapons, and electric armor) will enable electrical energy to be generated and used for the following functions:

- Transformation into kinematic energy for powering the drive train and controlling the main armament;
- Transformation into short-term high-voltage energy impulses for high acceleration of ballistic ammunition and stand-off active protection elements; and
- Transformation into focused electromagnetic energy (laser, high power microwave) for damaging or destroying optic and optronic sensors and electronic assemblies. (Grosch, 1999, p. 37)

Currently available MDS technology is reported to enable the realization of an output density 80 MJ/t over the next 5 to 10 years (Grosch, 1999).

An assessment of hybrid-electric drive and the potential for an all-electric armored fighting vehicle summarizes their present state:

> Flywheel as well as capacitor energy storage systems have much more in common with electromagnetic (EM) and electrothermal-chemical (ETC) guns than they do with electric transmissions. The close connection between EM and ETC guns—as well as electric armors and electrical energy storage systems—is due to the fact that they require large pulses of electrical energy, which can only be provided by such

systems. [Electric weapons and electric armor were discussed earlier.] Of course they also require electrical power generators.

In consequence, if EM or ETC guns were to come into use in armored vehicles, hybrid electric drives would also be used, almost automatically, since many of their basic ingredients would already be there.

Because of this close connection, the fate of electric transmissions has been closely linked in recent years with that of EM and ETC guns and their prospects have been viewed to a large extent in the context of the development of the "all-electric" combat vehicles. However, electric transmissions offer a number of advantages in their own right and can be used effectively by themselves. (Ogorkiewicz, 1999a, p. 37)

d. Tracks and Suspension

In most cases, armored fighting vehicle tracks consist of pin-jointed links. Continuous-band tracks are a design alternative that is expected to reduce track weight, maintenance, and acoustic signature of light armored fighting vehicles. However, the effect of mine blast on lighter tracks may be a problem.

The primary function of a vehicle's suspension system is to allow the tracks and wheels to move independently of the vehicle while keeping the vehicle "suspended" and stable. Armored fighting vehicle suspension development of semi-active or active suspension systems would, if successful, lead to improvement in accuracy of fire-control systems and permit increased off-road speed. Active suspension systems contain sensors, control units, and a hydraulic power source; in combination, these can automatically alter the suspension characteristics to more closely match the speed of the vehicle and the terrain profile (Ogorkiewicz, 1991).

4. Unmanned Vehicles and Other Robots

Military unmanned vehicles include ground and air robots. Ground robots in development come in all shapes and sizes, ranging from unmanned ground vehicles to swarms of insect-like devices that will, in the future, collaborate on specialized tasks. Teleoperated unmanned ground vehicles are already widely used to clear mines and disable bombs. Unmanned ground vehicles are expected to replace manned systems for dirty, dangerous, and dull missions. Now and in the near term a remote operator will occasionally provide commands in near-real time. In the longer term a single operator may work with many autonomous robots, which would

- be programmable;
- maintain stable behavior under complex, uncertain, and changing conditions;
- be able to learn; and
- operate safely and reliably in close proximity to humans (Hewish, 2001a).

At the high end of the size scale, forward-deployed unmanned ground vehicles may replace non-MBT armored fighting vehicles, which would reduce armor requirements as well as vehicle size and signature. To repeat from our earlier discussion, the main categories of unmanned ground vehicle missions include RSTA, MOUT, EOD, physical security (robotic sentries), and countermine operations. Performance of the RSTA mission can be enhanced with less risk to lives by employing tactical unmanned ground vehicles and UAVs alone or together (Schwartz, 1994). Tactical unmanned ground vehicles and UAVs are expected to be valuable sources of combat intelligence for the battalion commander's battle staff. "Unmanned systems, operating out front, provide a force-multiplication capability where [they see] the nature of the terrain, find the enemy, locate obstacles, acquire targets, detect chemical vapors and provide this information directly to those who need it most" (Hewish, 2001a, p. 35).

A large number of robots operating in parallel can perform some tasks faster and at lower cost than single, more complex machines.

This is particularly true in the case of miniature designs that exploit technologies such as microelectronics, microelectromechanical systems (MEMS) and "smart" materials, together with advanced approaches to packaging and energy storage. Applications could include using small sensors mounted on hopping robots to detect minefields; penetrating cities for intelligence-gathering via pipelines or sewers; deploying large numbers of robots acting as decoys; or using extremely small machines that can be injected to pick a door lock…[There are] several efforts in this area, many of which draw ideas from nature. [A] Distributed Robotics program focuses on developing terrestrial or aquatic machines, measuring less that 5 cm in any dimension, that can collaborate to perform complicated tasks. Because they are similar in size to small animals and insects, such robots can exploit biologically inspired methods of locomotion such as jumping, climbing, crawling and slithering. The complementary Software for Distributed Robotics program focuses

> on control, networking and computing technologies that will permit a large number of robots with extremely limited individual resources to achieve results collectively by behaving in ways similar to ants or honey bees.
>
> Several teams from academic institutions and industry are working under distributed Robotics contracts. [One university] is developing machines that can walk and jump in a similar way to crickets. They use tactile sensors similar to the insects' cilia (small hairs), together with MEMS-based instruments to measure leg joint angles and micro-valves to control the robots' actuators. (Hewish, 2001a, p. 39)

Robotic issues unanswered as yet are (1) What operations require a person in the loop? and (2) How many robots can a single operator control?

5. Digitization

Greater tactical mobility, increases in performance of sensors used to detect the enemy, and improved performance of weapons used against the enemy have increased the speed of modern combat operations. Digital battle-management systems are a means to cope with the problems of engaging and commanding fast-moving ground forces. "The major armies of the world see digital battle management systems as the way of the future. But progress with this new technology…has not gone smoothly" (Richardson, 2001a).

If a digitized combat unit or force is not to be delayed by a slow-moving logistic tail, the combat support and service support units will also need digitization (Richardson, 2001a).

A digital divide can present problems when digitized units operate alongside nondigitized units or when incompatible hardware or software prevents exchange of data with the dominant force. One result is that the nondigitized units will be less effective due to a lower level of situational awareness. Another result could be digitized units having to slow their operating tempo if called on to protect the nondigitized units (which have a lower operating tempo). And another could be greater risk of blue-on-blue losses when digitized units provide fire support for nondigitized units whose positions are not accurately known (Richardson, 2001a).

6. Vetronics

The drawdown of Western military forces has led to a smaller, but technologically more capable military. The objective is to achieve technological overmatch against any potential adversary. A key technology that supports overmatch is digitization of the battlefield. Vehicle electronics (vetronics) is fundamental to battlefield digitization. Coherent vetronics involves coping with the mass of tactical and logistical information transmitted to vehicle commanders and unit commanders:

> The role of the combat platform is to close with and continuously engage the enemy as effectively as possible. Based on this the vetronics system of the future will reflect developments in both intra- and inter-vehicle technologies. Essentially these will be based around onboard sensor systems, vehicle systems, weapon systems, communications and a data processing capability. (Bustin, 1995b, p. 61)

Vetronics requirements for the user can be broken down into these functional areas:

> **Mobility/Positioning**—This covers the physical location of the vehicle which for modern platforms can extend over hundreds of miles in single operations. As such the vetronics systems requirements centre on functional capabilities that allow the vehicle crew to monitor and exchange information on movement through a locating system such as an ILS or GPS incorporated with a map (probably a digital map system) combined with the relevant mission orders and goals. The inter-vehicle system to support this will require a protected data link.
>
> **Firepower**—To win a battle the vehicle must be able to bring the main armament to bear accurately, quickly and at long range. All sub-systems relating to this function, which are very diverse, are crucial to it. This includes sensors (IR/TI-Met), sighting systems, countermeasure systems, gun-laying mechanisms, ammunition management/loading. The integration of these diverse sensors and systems should be possible through an information network capable of distributed processing (thus reducing the required space under armor), and redundant to take account of damage and system failure.
>
> **Situational Awareness/Intelligence**—This function is divided into two distinct areas; information collected by the vehicle and which has a direct bearing on immediate crew actions, and information that is passed to the vehicle down the chain of command providing situational awareness of the developing battle around the vehicle and which the crew must consider for further actions. In addition, the vehicle will

provide real-time intelligence of value "up the chain" based on positional information and visual reporting of enemy activities or engagements.

Situational awareness is at the centre of the fire discipline issue and, therefore, crucial in preventing incidents of fratricide fire. All platforms operating in the same area require detailed information of individual platform locations (both friendly and enemy) in both the Area of Engagement (out to 5–6 km for an MBT) and the Area of Interest (out to perhaps 15 km). The underlying requirement is that position and location information fed through the vehicle system must be transparent to the duties of the crew fighting the vehicle regarding friendly troop dispositions.

Utilities—Covering the management of all vehicle systems including: propulsion management to provide optimised performance; power train management to cope with varying driving conditions; electrical power management, to optimise and the power loading of the vehicle systems; data processing—to include shared/distributed processing; data bus management to ensure the integrity of the system through redundancy contingencies and passage of data. In addition, the utilities functions will monitor and collate information required for servicing and maintenance according to a scheduled programme and for any "battle damage" repairs.

Logistics Reporting—Maintaining the forward momentum of an armored formation is crucial and is dependent on the timely use of logistic support. Throughout the battlefield day the logistic demands of the MBT should be monitored through transparent interrogation by the logistic tail as the formation moves forward. Such a system would cover fuel, ammunition and other combat stores. In this way much of the combat reporting function that takes up crew time will be available immediately providing a degree of anticipation in logistics planning and employment that is transparent to the operation in hand. (Bustin, 1995b, p. 61)

Some key features of vetronics for future armored fighting vehicles are (1) open architecture receptive to technological advances, (2) modular and portable software, (3) modular hardware that conforms to recognized standards, and (4) data links (between hardware elements) that use recognized standards and protocols (Vickers, 1996). The architecture of a vetronics system provides these facilities: (1) data control and distribution, (2) computer resources, (3) crew controls and displays, and (4) power generation and management.

The crew controls and displays subsystem is the most visible part of a vetronics system; they provide the critical soldier-machine interface on which the fighting efficiency of the vehicle depends, can involve reconfigurable crew stations and multifunction controls to interface with many vehicle sensors and subsystems and allow tasks to be reassigned among the crew members in the event of hardware failures.

Behind the scenes, the data control and distribution subsystem distributes digital data, video, audio and electrical control signals throughout the vehicle. The computer resources subsystem provides distributed data processing and control capabilities for the various subsystems, while the power generation and management subsystem generates and distributes electrical power to all subsystems of the vehicle. (Richardson, 2001b, p. 20)

As the number of electronic systems on the modern armored fighting vehicle increases, so does the amount of information that flows within and between individual systems.

Concurrently, features such as imaging, target recognition and target tracking are altering the nature of that information. It is no longer enough to be able to pass video information from one system to another; video data may need to be converted from analogue to digital form to be fully exploited by modern digital signal processing techniques. Throughout the vehicle, the output from sensors is being converted from analogue to digital at an early stage, a trend which can only increase in the future, as well as the amount of data being transferred and the rate at which it must be sampled. Future system architectures must be able to handle these demands, and provide ever-growing levels of processing power. (Richardson, 2001b, p. 21)

The growing digitization of weapon systems fosters the use of embedded simulation for training purposes, which vetronics design must accommodate.

An AFV with an embedded simulation system would present its crew with a simulated "virtual world" which can be used not only for training and mission-rehearsal but also for planning tasks such as the evaluation of proposed tactics. Virtual training can be done in any weather, consumes no fuel, makes no damage to the environment, and does not leave litter, expended ammunition, or "dud" rounds to be cleared up. Being computer-generated, the "enemy" can easily be reprogrammed to create new tactics or even new equipment. (Richardson, 2001b, p. 21)

Fitting electronics systems into an armored fighting vehicle is not an easy task:

> For a start, the hardware must cope with high levels of shock and vibration. Then there is the problem of temperature. It's often hot inside an armored fighting vehicle, with the engine, electronics and crew all adding their individual contributions to a vehicle which may be operating with all hatches closed.
>
> The crew compartment of any tank can become excessively hot when the vehicle is operating in desert conditions. For example, on the basic M1A2, when the outside temperature is 51 °C (125 °F), the temperature at the commander's station rises to around 57°C (134°F), limiting the commander's endurance to an estimated 91 minutes. This was to prove a potential problem in the 1990s when the U.S. Army planned its M1A2 System Enhancement Package (Sep). The Sep would add new electronic systems to the vehicle, and engineers realised that as a result of the extra heat generated by new systems, the internal temperature could rise to 62.8°C (145°F), reducing the commander's endurance to less than 80 minutes. This high temperature would not only reduce crew performance, but would have forced the use of costly mil-spec components, thus driving up hardware costs…to prevent [overheating, a thermal management system was installed]. (Richardson, 2001b, p. 22)

Efforts to adopt open-systems, commercial off-the-shelf (COTS) components into armored fighting vehicle vetronics architecture present a major problem in that commercially developed electronic components were not intended to withstand intense extremes of shock, vibration, temperature, and electromagnetic interference (Keller, 1997). Another major problem is a high-speed data bus (HSDB) to tie vetronics subsystems together into integrated architectures. The present standard data bus, MIL–STD–1553, is an established, reliable data bus that has been in service for over two decades. However, it can only handle data rates of up to 1 Mbit/sec, which may be too slow to manage future data, audio, and video information rates (Keller, 1997). This future need for a HSDB is cited in other vetronics reports (Bustin, 1995b; and Richardson, 2001b).

Displays

Another new technology that will continue to attract vetronic designers is that of flat-panel displays (FPDs), which are already replacing bulky, heavy, and power-hungry cathode-ray tube (CRT) monitors (Hewish and Lok, 1998, and Richardson, 2001b). A Department of Defense study reported "that ruggedized consumer-grade FPDs could meet the environmental requirements for a broad range of military applications, including [Army] ground vehicles."

> Such modified off-the-shelf (MOTS) hardware is being adopted on a growing scale, and may become easier [to obtain] as high volume manufacturers of commercial displays move into non-computer areas such as the industrial, medical and transportation markets to increase their sales. These non-military users may have requirements closer to those of the military than to those of the laptop computer industry. MOTS displays may be inexpensive by military standards, but there is concern in the USA that the main suppliers of commercial FPDs are in foreign countries, which raises questions over the wisdom of becoming dependant on overseas suppliers in the long term. (Richardson, 2001b, p. 26)

7. Human Systems Integration

Human systems integration (HSI) involves combining humans and machines in a way that maximizes human and total system performance. The essence of the integration is to use humans in activities where they surpass machines, such as

- detecting visual, auditory, or chemical energy;
- perceiving patterns of light or sound;
- improvising and using flexible procedures;
- storing information for long periods and recalling appropriate parts;
- reasoning inductively; and
- exercising judgment.

And to use machines in activities where they surpass humans, such as

- responding quickly to control signals;
- applying great force smoothly and precisely;
- storing information briefly and erasing information completely;

- reasoning deductively;
- performing repetitive and routine tasks; and
- handling high complex operations (Fitts, 2000).

A consequence of advances in robotics, vetronics, and digitization is a shifting of crew workload to machines, thereby enhancing mission performance. Robotic vehicles, which are now teleoperated but expected to operate with increasing levels of autonomy, are or will soon be capable of orienting themselves, becoming self-righting platforms, negotiating terrain while detecting and avoiding obstacles, employing artificial intelligence for route planning, and using adaptive tactical behavior employing learning algorithms and intelligent mobility. Full autonomy, however, cannot be expected soon. Unanswered questions are "What operations require a human in the loop?" and "How many robots can one operator control?"

As time goes on, manned vehicles will increasingly employ robotic subsystems for better performance and reduced crew size. The U.S. Army TACOM is pursuing application of unmanned ground vehicle technologies to manned systems in two programs:

> In the near term, TACOM's Crew Integration and Automation Testbed program is applying intelligent driving decision aids in an effort to reduce the vehicle crew to two members while maintaining full operational effectiveness. The program will leverage semi-autonomous driving and automation-assisted mission-planning technologies that are being developed in Demo III as well as other crew interface and task automation technologies.
>
> As a longer-term effort, [TACOM, the Army Research Laboratory, and the Defense Advanced Research Projects Agency] are teaming on the Future Combat Vehicle (FCV) program. The FCV system is expected to rely heavily on robotics and automation technologies for mobility, surveillance, engagement, and logistics, partly because robotics enable a lighter force with high effectiveness. This force may include both UGVs and vehicles with reduced crew size. (FY2000 Joint Robotics Program Master Plan, 2000, p. 41)

The Crew Integration and Automation Testbed includes the following:

- Advanced Electronic Architecture
  - Object-Oriented Software Backplane
  - Advanced Network Technology
- Driving Technologies
  - Drive-By-Wire
  - Demo III Semi-Autonomous Driving
  - Intelligent Driving Decision Aids
- Two-Soldier Operation
  - Commander/Driver
  - Gunner

Side by side and tandem crew stations will be evaluated while crew performs tasks in operating a combat vehicle.

- Advanced Technologies
  - Speech Recognition
  - 3–D Audio
  - Indirect Vision
  - Helmet-Mounted displays
  - Head Trackers
  - Crewman's Associate Interface
- Embedded Simulation
  - Embedded Training
  - Mission Rehearsal
  - Battlefield Visualization
  - Command Coordination

  - After Action Review
- MANPRINT (MANpower and PeRsonal INTegration)
  - Workload/task Analysis
  - Human Figure Modeling
  - Human Factors Crew Station Integration. (FY2000 Joint Robotics Program Master Plan, 2000, p. 42)

Incorporating a thermal management system in tanks to ameliorate the heat produced by engine, electronics, and crew is one instance of modifying the environment to improve crew performance. Another problem in combat vehicles is noise, which can affect the vehicle crew in several ways (Gauger, 1995).

- It interferes with communication, degrading intelligibility.
- It is fatiguing after hours of exposure, reducing alertness and effectiveness.
- It can lead to permanent hearing damage after extended exposure.

For crewmen wearing helmets or headsets, acoustic noise can reach the ear through two paths: directly (penetrating the earcups surrounding their ears) and through the intercommunications system (ICS) after being picked up by boom or mask-mounted microphones (Gauger, 1995, p. 38).

Two basic concepts can be used for reducing noise at the ear in crewmen's headsets, passive attenuation and active cancellation, which are described below:

> [Passive attenuation] is simply the process of creating a physical barrier around the ear in an attempt to block or seal out noise. Typically this consists of an earcup to enclose the ear and an earseal to seal the cup to the head. Inside the earcup a small speaker element (referred to as a driver elsewhere in this paper) is mounted to reproduce communication signals from the ICS. Several mechanisms allow noise to penetrate the barrier: through the air leak resulting from an imperfect seal to the head, vibration of the mass of the earcup on the spring formed by the earseal and the skin, and direct transmission through the not-perfectly-rigid materials that comprise the earcup and earseal.
>
> In contrast to passive attenuation, active cancellation does not rely on physical barriers to reduce transmission of noise. Instead, destructive interference between the noise and an out-of-phase sound that mirrors the noise is used—sound is cancelled by subtracting one sound from another rather than simply being muffled or attenuated. The term active is used since an electro-acoustic system is required to generate the required out-of-phase canceling sound. In order for active cancellation to be effective, it is necessary for the canceling signal to accurately match the mix of frequencies, as well as the amplitude and phase of each component frequencies, comprising the noise. The amount of cancellation provided is limited by the degree of match achieved at each instant in time. (Gauger, 1995, p. 38)

LIST OF DCT/S&T TECHNOLOGY DATA SHEETS
9.1. COMBAT VEHICLES

Tactical Laser Weapon DCT-9-41
Electro-Thermal Chemical Gun DCT-9-41
Active Hard-Kill Protection System DCT-9-42
Electric Drive DCT-9-43
Vetronics DCT-9-44
Unmanned Ground Vehicles DCT-9-44

DCT/S&T DATA SHEET 9.1. TACTICAL LASER WEAPON

Critical Technology Parameter	Ground-vehicle-mounted or helicopter-mounted laser weapon for shooting down rockets, missiles, UAVs, and aircraft and for use against critical components of armored vehicles. Range is expected to be 1 km for hard kill and 10 km for sensor kills.
Critical Materials	Expect fiber-optic laser will replace yttrium-aluminum-garnet compound (Yb or Nd:YAG).
Unique Test, Production, Inspection Equipment	None identified.
Unique Software	None identified.
Major Commercial Applications	None identified.
Affordability Issues	None identified.

BACKGROUND

About a decade ago the United States and Israel began to develop lasers to knock out small rockets often used by guerrillas.

DCT/S&T DATA SHEET 9.1. ELECTRO-THERMAL CHEMICAL GUN*

Critical Technology Parameter	120-mm ETC gun with 2,000 m/sec muzzle velocity.
Critical Materials	Special powder charge with density higher than conventional propellants.
Unique Test, Production, Inspection Equipment	None identified.
Unique Software	Sequential introduction of electrical energy to provide a more favorable progression of internal pressure in the weapon than can be achieved with uncontrolled combustion.
Major Commercial Applications	None identified.
Affordability Issues	An advantage of ETC technology is that it could be used with existing solid-propellant guns.

BACKGROUND

The generic term "electric gun" actually involves three very different concepts:

- Complete transformation of electric energy into the kinetic energy of the projectile (electromagnetic guns: rail gun, coil gun);
- Transformation of inert propellant with a lower molecular weight into propellant gases (electrothermal gun, ETK);
- Enhanced combustion of the propellant charge so as to produce a muzzle velocity and/or muzzle energy not achievable with conventional powder-operated guns (electrothermal-chemical gun, ETC).

---

* See Section 2 for more on ETC gun.

DCT/S&T DATA SHEET 9.1. ACTIVE HARD-KILL PROTECTION SYSTEM

Critical Technology Parameter	Hemisphere protection of armored vehicles against tube-launched KE and HEAT rounds, ATG missiles, and smart top-attack munitions.
Critical Materials	Electromagnetic armor.
Unique Test, Production, Inspection Equipment	None identified.
Unique Software	Program that identifies detected weapon threat from sensor inputs and initiates launch of defensive round carrying an explosive warhead, an armored bar/plate, or other hard-kill device.
Major Commercial Applications	None identified.
Affordability Issues	Affordability depends on the achievable level of success in defeating the antiarmor threat weapons. Following development, field test should provide data that enable analysts to predict the cost of vehicle losses avoided versus the cost of active-protection systems.

BACKGROUND

Survivability options for armored vehicles include signature management, which includes camouflage; armor, which includes various materials, as well as explosive reactive armor and electric armor; and active-protection systems, which are categorized as either soft kill or hard kill.

DCT/S&T DATA SHEET 9.1. ELECTRIC DRIVE

Critical Technology Parameter	There are three different forms of electric drive. 1. *Electric transmission*: A generator coupled directly to the vehicle's engine provides electric power to separate motors that drive each sprocket of a tracked vehicle or each wheel of a wheeled vehicle. Unqualified advantages are more efficient engine operation, less maintenance, long operating time from battery ("silent watch"), and better crew protection by eliminating fire risk of hydraulic transmissions. 2. *Hybrid electric-drive system:* Power is provided by engine and flywheels or batteries. Advantages include increase in vehicle range, about 25 percent faster acceleration than a larger standard engine from a nonmoving state, stealthy operations using only battery power, reduced thermal signature, and almost no acoustic signature in silent watch periods. 3. *All-electric armored fighting vehicle:* Same as 2, but with power system capable of also supporting electric armor, electric weapons, and other high-power loads. A diesel-electric drive consists of a high-power-density motor coupled with a magnetoelectro dynamic generation and an infinitely variable electromechanical transmission. The electric drive is combined with an electric-energy accumulator, which is an MDS flywheel.
Critical Materials	1. Electric transmissions will use new magnetic motors and high-power semiconductors. 2. Same as 1. 3. MDS electrical output density of 200 MJ/ton at 5,000 kW.
Unique Test, Production, Inspection Equipment	None identified.
Unique Software	None identified.
Major Commercial Applications	1. Trucks and buses. 2. Commercial vehicles. 3. None identified.
Affordability Issues	1. Lower life-cycle cost. 2. Lower life-cycle cost. 3. None identified.

BACKGROUND

The applications of electric-drive technologies provide successively greater advantages identified in the data sheet. These technologies are either available today or currently in development. The all-electric armored fighting vehicle would use electric drive and high-performance pulse technology combined with electric weapons (most likely the ETC) to achieve a major advance in technical and tactical performance.

DCT/S&T DATA SHEET 9.1. VETRONICS*

Critical Technology Parameter	Vehicle electronics (vetronics) system for intravehicle and intervehicle communications utilize digital electronics. The vetronics system includes (1) data control and distribution, (2) computer resources, (3) crew controls and displays, and (4) power generation and management.
Critical Materials	Flat-panel displays rather than bulky, heavy, power-hungry CRTs. High-speed data bus to handle data rates greater than the current 1 Mbit/sec.
Unique Test, Production, Inspection Equipment	None identified.
Unique Software	Software that enables vehicle commanders to send and receive digital messages.
Major Commercial Applications	None identified.
Affordability Issues	None identified.

BACKGROUND

Greater tactical mobility, increases in performance of sensors used to detect the enemy, and improved performance of weapons used against the enemy have increased the speed of modern combat operations. Digital vetronics derived from COTS technology are a means to cope with the problems of engaging and commanding fast-moving ground forces.

DCT/S&T DATA SHEET 9.1. UNMANNED GROUND VEHICLES

Critical Technology Parameter	Unmanned ground vehicles that operate safely and reliably in proximity to humans and maintain stable behavior under complex, uncertain, and changing conditions. Expected missions are RSTA, MOUT, EOD, countermine operations, and physical security (robotic sentries). The unmanned ground vehicles will operate autonomously or semi-autonomously with possible periods of tele-operation.
Critical Materials	None identified.
Unique Test, Production, Inspection Equipment	None identified.
Unique Software	Robotic algorithms for perception (understand the environment) and navigation, intelligent behavior, mobility planning, adaptive reasoning, and operating in a mixed force (mounted/unmounted/unmanned).
Major Commercial Applications	Physical security operations and tele-operated dirty, dangerous, and dull missions.
Affordability Issues	None identified.

BACKGROUND

Remotely operated (tele-operated) machines are already in widespread use, mostly for dangerous tasks such as clearing mines or disabling bombs.

---

* See Section 9.4 for battle-management-related vetronics.

SECTION 9.2—INDIRECT FIRE SYSTEMS

Highlights

- Strategic deployability and operational mobility in theater are major factors in the design of indirect-fire systems.
- Longer range and helicopter portability of towed guns/howitzers are especially important for early-entry intervention forces.
- Electro-rheological fluid damping shows great promise for soft-recoil systems that will significantly reduce the weight of guns/howitzers.
- The modular charge system, which is replacing artillery propellant bags, will reduce the artillery logistics burden, thereby improving deployability and operational mobility.
- As in the case of tank guns, ETC propulsion would significantly increase the muzzle velocity of existing solid-propellant guns.
- 2–D course correcting (range and azimuth) GPS-based fuzes will improve artillery precision against long-range targets.
- LIDAR systems will provide high-resolution imagery that is not susceptible to variations common to imaging IR.
- LIDAR seekers will be able to form 3–D images of targets to ensure positive identification of tanks, other armored vehicles, SAM sites, and missile transporter-erector-launchers.
- ATR seeker tasks and the complexity of target-recognition algorithms will be significantly reduced on missiles equipped with GPS/inertial navigation systems guidance that steers them to a precise location.
- Fiber-optic cable deployable from missiles to ranges up to 60 km will simultaneously relay imagery in one direction and command guidance in the other enable an operator to get eyes-on-target from a nose-mounted camera as the missile approaches the target.

OVERVIEW

Factors affecting the design, development, and number of ground combat vehicles will influence guns, mortars, and rockets also. These indirect-fire systems are likely to be used in battlefields less dense than in a NATO Central Europe scenario. As in the case of tanks and other armored fighting vehicles, fast strategic deployment to a distant theater and operational deployment within a theater are major considerations for indirect-fire systems. And indirect-fire systems are also expected to be used in two types of conflict: high-intensity war such as the Gulf War and lower level peacekeeping/peace-support operations. Spending constraints and smaller forces mean the same equipment may have to be used for both missions.

Common requirements of weapon launchers include range, accuracy and consistency, mobility, and protection. *Range* can be increased by modifying the launcher, the munition, the propellant, or all three. *Accuracy* is a measure of precision with which mean point of impact of a group of rounds can be placed on target. *Consistency*, a statistical function that measures the dispersion plus or minus of the mean point of impact, is affected by round-to-round variations in factors such as muzzle velocity, local meteorology conditions, sight setting and laying, and ramming. In addition to strategic deployability and operational deployability, *mobility* includes tactical movement on the battlefield. *Protection* against indirect-fire weapons and air-launched weapons includes light armor and tactical methods to counteract these threats, such as dispersion, concealment, digging, camouflage, and mobility (Manson, 1997; Evans, 1995).

A. GUNS AND HOWITZERS

A major effort among Western nations for improving indirect-fire platforms has focused on producing a 155-mm towed gun that is helicopter portable. Such a weapon is a key element of maneuver forces in high- or medium-intensity operations. Reduced weight and helicopter portability are especially important for early-entry

intervention forces. The maximum practical range of about 20 km for lightweight 105-mm gun/howitzers seems less and less adequate. Furthermore, the smaller caliber guns have high-explosive charges in their 105-mm shells that are about three-fourths those in 155-mm shells (Pengelley, 1996b, 1998a; Po, 2000).

Technological developments in advanced metallurgy (e.g., aluminum and titanium alloys) and particularly in recoil technology are the basis for new-generation, lightweight 155-mm gun/howitzers (Po, 2000). The most significant technological development is the incorporation of electro-rheological fluid in the gun/howitzer recoil system (Pengelley, 1998b). Electro-rheological fluids, which stiffen in response to applied voltage, show great promise for improved variable dampers and power-steering systems (European Automotive Design, 2001). "ER fluid contains nonabrasive metal particles, and its viscosity can be varied electrically, transitioning from a liquid to a near solid state and back again in milliseconds" (Pengelley, 1998b).

> In gun applications, direct electrical actuation permits active feedback control of the recoil event, reducing loads to the trunnion and trails and in principle permitting an even lighter carriage to be employed. A control algorithm uses real time inputs to establish optimum recoil conditions, adjusting both force profile and recoil stroke. (Pengelley, 1998b, p. 39)

By exploiting electro-rheological fluids, a "common platform" concept is gaining attention. A common platform could be used for direct-support towed howitzers that can be lifted by unmodified helicopters and, with its prime mover, transported by C–130s. It could also be "used to support other, larger artillery pieces, including 39-caliber/30 km range (U.S. lightweight 155) and 52-caliber/40 km range general support configuration" (Pengelley, 1996b).

> A quick-change capability, enabling the tube length and ammunition system to be matched to the prevailing threat, would be a major boon. Such flexibility would give the user the option of deploying fast with the lightest configuration, upgrading in theater as necessary, or of preemptively up gunning and thereby accepting a concomitant reduction in the number of howitzers deployable in the initial lift. (Pengelley, 1996b, p. 74)

B. MORTARS

Mortars, which are infantry weapons, fall into three main categories:

- Light infantry—most are 60 mm and others are 50–52 mm;
- Medium caliber—81-mm and 82-mm tubes deployed in lieu of light artillery; and
- Heavy—120-mm weapons except for 160-mm and 240-mm mortars favored by Russia.

Mortars are ground emplaced, towed, or vehicle mounted. Vehicle-mounted turreted mortars are an integral part of Russian artillery (Bustin, 1995a).

Caliber for caliber, mortars have a payload advantage over tube artillery. The 120-mm mortar has a round with a high-explosive capacity close to that of a 155-mm artillery projectile. Deployability is increasingly important as main NATO defense forces may take weeks to move to a prospective battlefield; organic infantry firepower (mortars) can be expected to provide interim fire support (Pengelley, 1997c). The most significant improvements in mortars are and will continue to be in target acquisition, fire control, and digitization (Hewish and Pengelley, 1999).

Mortars have long been considered area weapons. That is still true. However, "area" does not mean inaccurate:

> Target information and mortar base plate data must be as accurate as possible to ensure successful engagement of the target. The area effect of the weapon system is a factor of applying the mortar "footprint" and the fragmentation effect of the ammunition. Also, in direct response to developments in "smart" ammunition, the demand is for a mortar to attack a precision target; accordingly, the round must be reasonably expected to arrive in the area of the target thus reducing the workload on the seeker and processor components. (Bustin, 1995a, p. 10)

C. ROCKETS

Compared with guns, rockets have poor accuracy and consistency. Because of limited accuracy, rockets are designed primarily to attack large-area targets. Their warheads contain submunitions because unitary high-explosive warheads provide inefficient area coverage. However, their potential for greater warhead capacity and software acceleration make rockets suitable as "vehicles for dispensing smart submunitions in long-range precision attack" (Manson, 1997).

More than 60 countries have multiple rocket launcher (MRL) designs. Standbys in the MRL business are the Russian 122-mm Grad BM–21, which is the precursor of many other 122-mm systems, and the U.S. 227-mm MLRS (multiple launch rocket system). Current and future MRL improvements are and will focus on:

- New technologies for increasing range and versatility;
- Making the launcher vehicle adaptable to more than a single caliber rocket;
- Reducing launch signature;
- Reducing system weight to enhance rapid deployability with heavy forces;
- Digitization to increase effectiveness by speeding up target acquisition and communications; and
- Using GPS-aided inertial guidance to improve delivery accuracy (Pengelley, 1997d).

The NetFires indirect-fire system, the fire-support system of the U.S. Army's Future Combat System (FCS), is expected to provide precision attacks by missiles beyond range of direct-fire systems. In the FCS-NetFires concept, potential targets will be acquired at significant ranges by electronic, video, and other intelligence sources; they will be identified visually and tracked continuously (Hewish, 2001e; and Tiboni, 2001b).

Table 9.2-1 summarizes the advantages and disadvantages of the three forms of indirect-fire systems.

D. TECHNOLOGY IMPROVEMENTS

Indirect-fire systems improvements are discussed in the following technology areas: command, control, communications, and computers (C4); meteorology; logistics; range; propellants; electro-thermal guns; fuzes; and accuracy. Target acquisition is discussed in Section 9.3 of this document. Section 9.4 has more C4 discussion. Other indirect-fire-systems-related technologies are covered in other MCTL sections: Section 2, Armaments and Energetic Materials; Section 10, Information; Section 11, Lasers and Optics; Section 14, Materials and Processes; Section 16, Positioning, Navigation, and Time; and Section 17, Sensors.

1. Command, Control, Communications, and Computers

Computing technologies greatly improve the ability of armies to command and control artillery. Operational commanders have battlefield-management and decision-support tools that can automate all fire-support battlefield functions. For example, the U.S. Army's Advanced Field Artillery Tactical Data System (AFATDS) provides the automated fire support, command, control, and communications portion of the Army Battle Command System (ABCS):

> AFATDS provides integrated, automated support for planning, coordinating and controlling all fire support assets (field artillery, mortars, close air support, naval gunfire, attack helicopter, and offensive electronic warfare) and for executing counter fire, interdiction, and suppression of enemy targets for close and deep operations. AFATDS uses non-developmental, ruggedized, common hardware/software used by the other ABCS [battle function areas]. AFATDS uses the results of its target-value analysis to establish target priorities, to select the best weapon system from all fire support assets available, and to coordinate target acquisition and sensor assets to provide targeting information and target damage assessment data. (United States Army, 1999, p. 9)

The UK's Battlefield Artillery Target Engagement System (BATES) is a good example of a system that enhances all elements of C4 and Intelligence:

> It is programmed to take account of considerable amounts of information about firing units (such as location and ammunition stocks) and about targets (such as type, size and location) and future plans. According to priorities set by commanders the computer processors can then suggest which firing units should engage which targets to provide the most effective response on a complex battlefield, and it will of course provide the necessary ballistic computation. Commanders have the option of making this process automatic, so that

Table 9.2-1. Comparison of Weapon Platforms (Source: Manson, 1997)

System	Advantages	Disadvantages
Guns	Good range coverage	Limited capability against MBTs (but this should improve soon)
	Good accuracy and consistency	Poor strategic mobility (especially SP guns)
	Good sustained fire capability	
	Good weight of fire	Increased weight for greater range
	Good response times	Greater logistic load than mortars
	Fair capability against light armor	Difficult to dig in and conceal
	Good tactical mobility (especially SP guns)	Limited guarantee of intimate support
	Direct fire capability	Complex and expensive
Mortars	Very light: high overall mobility	Limited range
	Simple and cheap: good for conscripts	No low angle fire: easy to locate
	Low maintenance	Long time of flight
	Good lethality against unprotected troops	Requirement to 'bed-in'; poor initial accuracy
	Good rate of fire	No direct fire capability
	Quick into and out of action	No big advantages over SP guns when mounted under armor
	Easy to dig in and conceal	Very limited against hard targets
	Good guarantee of intimate support	
Rockets	Long range possible without increase in platform weight	Accuracy and consistency worse than guns
	Very good initial weight of fire: shock effect	High minimum range
	Versatile payload	Significant logistic load
	Good potential for smart submunitions: good anti-armor capability	Poor sustained fire capability
		Relatively long response time
		Poor strategic mobility
	Good tactical mobility	No direct fire capability

> once an observer has entered target data the system will select the most suitable firing units and send their guns the relevant ballistic data. Many other functions are also available, such as automatic prompting of the need to resupply firing units with ammunition since it will keep a record of how much each one has fired.
>
> There are likely to be several advantages in moving ballistic computation from a command post, where it is presently carried out, to each gun. This is already provided on advanced rocket systems such as the MLRS. Such on-board computation would allow guns to operate almost autonomously, improving their freedom of movement and thus their survivability. It should also provide better accuracy since it would allow detailed data on muzzle velocity and charge temperature variations to be accounted for almost instantaneously. (Manson, 1997, p. 125)

Digitization of MRL systems has already been mentioned as making target acquisition and communications more timely. Another MRLS improvement is increased computer memory and some machinery to make the launcher swivel faster and elevate faster to firing position; elevation and swiveling times for maximum range missions are reduced from 93 seconds to 16 seconds (Willis, 1998).

2. Meteorology

Meteorology and meteorological predictions are important factors in indirect-fire systems. The two main reasons for inaccurate met predictions are

- Remoteness of the weapon platform from the meteorological station (typically up to 35 km); and
- Inability to provide "down range" meteorological conditions throughout the trajectory of the weapon (Manson, 1997).

More local meteorology can be provided by compact stations now available. The U.S. Army Integrated Meteorological System (IMETS) is mounted on an HMMWV (United States Army, 1999). The British Army Vaisala system can be deployed in two Land Rovers (Manson, 1997).

Methods are being investigated to solve the downrange meteorological problem effectively. "Registration" is an alternative to using meteorological data. Registration finds, by firing, corrections for later use. This practice was of doubtful battlefield use because it required a very accurately located aim-point and was applicable only to very similar trajectories.

> However, laser rangefinders and associated equipment mean that most observed firing can now provide registration data. Radars also can track shells to find out where they actually land, which enables derivation of registration data. Electronics miniaturization may also eventually enable fuzes to incorporate a Global Positioning System (GPS) antenna chip set and radio transmitter and report their own position to give registration data. (Evans, 1995, p. 22)

3. Logistics

Reducing logistics burden is important for rapid deployment. Artillery ammunition is a major logistics constraint to movement and, possibly, in operations (Manson, 1997).

> For propellant, the key is to make it more kinetically efficient so that less volume and weight of charge are required to achieve a given range. Another solution is to avoid wastage of propellant. At present when firing low charges the unwanted propellant bags are destroyed since they are not interchangeable. If all the charge increments in a cartridge are made of the same size, those not required for shorter range fire missions need not be discarded but can be used to build up cartridges for future missions. This is the concept behind the Modular Charge System (MCS), which is designed for using future guns of several NATO nations. (Manson, 1997, p. 126)

Figure 9.2-1 shows an MCS developed by South Africa.

Figure 9.2-1. Modular Charge System
[Developed by Somchem, a division of Denel (Pty) Ltd., South Africa]

4. Range

Increased range can be provided by using longer barrels, which increase the time that work is being done on the projectile. But an increase in range generally requires more propellant to raise muzzle energy, which is determined by muzzle velocity and projectile mass. Typical muzzle energies for various calibers are shown below:

Caliber in mm	Energy in Megajoules
105	11
122	11
152–155	20
175–180	29
203–210	49

The amount of propellant, its chemical energy, and the way it burns determine MV. Raising the projectile mass implies a larger caliber, without which the steel casing would take up a larger proportion of the total projectile weight (Evans, 1995; Manson, 1997). 155-mm self-propelled gun/howitzers of the United States (M109), UK (Braveheart), Germany (MzH2000), and France (AUF GCT) have 52-caliber barrels and are capable of 40-km range (Gourley, 2001; Pengelley, 2001a; Pengelley, 2001b; Foss, 2001a; and Pengelley, 2001c). The U.S. new-generation, lightweight 155-mm towed gun/howitzer also has a 52-caliber barrel and maximum range of 40 km (Po, 2000).

Range can also be increased by use of assisted shells, which take either of two forms: rocket-assisted projectile or base-bleed. A rocket-assisted projectile is a small rocket unit fitted into a projectile to provide a post-firing boost. A base bleed unit, which reduces drag and improves aerodynamics, fills a vacuum behind the projectile with a slowly released gas (Manson, 1997; Lee, 1981). Figure 9.2-2 illustrates rocket-assisted projectile and base bleed.

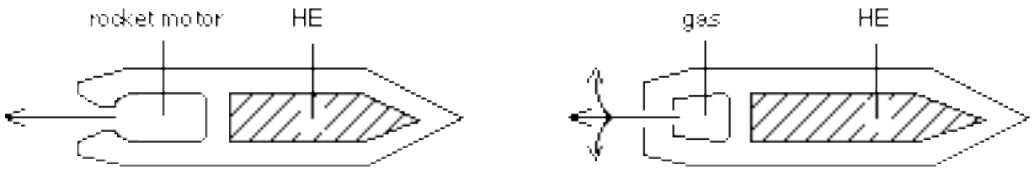

Figure 9.2-2. Illustration of Rocket-Assisted Projectile and Base Bleed Projectiles (Source: R.G. Lee in Brassey's *Introduction to Battlefield Weapons and Technology*)

5. Propellants

To increase the range of a given weight projectile, it must be launched with a greater muzzle velocity. That, in turn, may require greater energy output from the charge, which motivates considerable R&D to develop practical propellants with higher energy per unit mass (specific energy):

> Increases in the specific energy of solid propellants are quite possible but this may lead to increased barrel stresses and to a higher flame temperature, which in turn can make ignition more difficult unless special additives are included. An additional consideration is that if smart, precision-attack shells containing sensitive electronic components are to be fired then there will be a need to launch them with lower accelerations so that the delicate sensors survive the forces at launch. (Manson, 1997, p. 127)

Liquid propellants have been investigated for many years. Liquid propellants have significant advantages over solid propellants (25 percent cheaper, higher energy density, lower peak pressure). However, liquid propellants have significant development problems—liquid propellants can be toxic and corrosive, and complex handling systems, including high-performance valve and seals, are needed to withstand high breech pressures—and "the current ability of LP guns to provide repeatable MVs is doubtful" (Manson, 1997).

6. Electro-thermal Guns

ET guns, discussed in Section 9.1, use electrical energy to modify the internal ballistic cycle of relatively conventional ordnance:

> The simplest type is often referred to as a "pure ET" gun: here electrical energy in the form of a plasma discharge is used to heat a working medium such as water which absorbs heat. In doing so it vaporizes, thereby pressurising the chamber in much the same way as a solid propellant does when it burns. However, by varying the electrical input the pressure-time curve can in turn be altered and hence projectile acceleration and muzzle velocity can be controlled. The attraction of such a system is that inert, and probably cheap, working fluids can be used, but the prime disadvantage appears to be that a considerable quantity of electrical energy is required in each pulse and these would be difficult to generate in a sustained manner.
>
> An alternative and currently more promising system is Electro-Thermal-Chemical (ETC) propulsion. Here, the electrical energy is again used to generate a plasma discharge but this now acts on an exothermic working medium—a propellant which generates heat as a result of this initiation process. Plasma is very hot and light so it will ignite the propellant evenly and rapidly, even if the latter is relatively dense. Furthermore, the rate of propellant combustion can be controlled by varying the electrical input, which in turn will control the pressure driving the projectile and hence its muzzle velocity. A significant advantage of ETC technology is that it could be used with existing solid propellant guns. (Manson, 1997, p. 130)

Electromagnetic guns, also discussed in Section 9.1, involve discharging a large quantity of electrical energy into rails or coils, which form the "barrel" of the gun:

> This sets up a powerful magnetic field which, by acting on an armature at the rear of the projectile, accelerates it to extremely high velocity—at least 2,000 m/s. At present such guns can only operate with relatively light projectiles, and the problem of storing sufficient electrical energy for, say, five rounds to be fired has yet to be solved practically. Assuming that the various problems can be solved, their prime application, at least in the medium term, is therefore seen to be as direct fire weapons where requirements are for a high energy density in the projectile and not for sustained fire of heavy shells. (Manson, 1997, p.31)

7. Fuzes

A fuze initiates detonation of a projectile warhead when the projectile strikes a target or at an appropriate point in flight. Warhead initiation involves an explosive train from a sensitive explosive through intermediaries, which are less sensitive, until the main charge is detonated. Safety and reliability are the most important characteristics of fuzes (Courtney-Green, 1991; Lee, 1981).

Following electronic proximity fuzes used since WW II, new generations of electronic and programmable fuzes are being developed. NATO force reductions have driven the fire-support community to focus on higher levels of automation, rates of fire, and precision, as well as lower costs of acquisition, logistics, and training. The projectile cavity in which the fuze is seated is the logical place to put precision-related enhancements:

> This approach makes it possible to institute changes without impinging on the payload volume, and upgrades can readily be applied to stockpiled rounds. The expectation therefore is that, besides the standard sensing, timing, and initiating elements of the baseline fuze, items such as accelerometers, GPS satellite signal receivers, and aerodynamic control surfaces (canards or drag units) will in future also be stowed in the existing fuze volume. (Pengelley, 1997b, p. 37)

An example of a next-generation fuze is the UK-developed universal, programmable multipurpose fuze, which is to fill fuzing requirements for tube and rocket artillery and also mortars. A single unit will have proximity, point detonating, post-impact delay, and electronic time (Pengelley, 1997b).

Guidance-fuzed GPS ordnance enhances precision of artillery against long-range targets.

> In GPS fuzes it is necessary to synchronize timing and to maintain that timing in order to derive the requisite accuracy; you have to maintain the power rather than use a volatile memory. Aboard guided munitions the power demands are even greater, since they offer a very small space and include power-hungry subsystems such as motorized control surfaces. (Pengelley, 2001b, p. 39)

MEMS technology offers some potential benefits. One is the opportunity to distribute fuze functions:

> A single point of initiation might not always give the optimum lethality and, rather than having to opt for front-end "screw-in" solutions, it could for example, be possible to remote the detonator from the fuze. This might be useful in a MOUT (military operations in urban terrain) environment where base initiation of an HE (high explosive) projectile payload could be more effective if it served to canalize the majority of the detonation blast in the direction of flight rather than rearwards.
>
> The "MEMS-ing" of timers and inertial sensors could also help to diminish power demands, but caution can work against innovation. While use of newer technology might allow a reduction in size, as the observer put it, safety and approvals agencies "tend to get very excited about having an all-new design." Consequently advances in fuze design are more likely to be evolutionary rather than revolutionary. (Pengelley, 2001b, p. 39)

The use of artillery multioption fuzes "has meant pre-fuzed rounds have already become the norm in some countries, and they are likely to become more prevalent with the increased automation of howitzer operation. For high-mobility rapid-reaction applications the merits of having pre-fuzed rounds are clear, but less so in peace support operation. In any event, standard operating procedures and standardization in general self-evidently contribute to increased safety in operation, particularly in a coalition context" (Pengelley, 2001b, p. 39).

Smart fuzes combine detonation functions with course-correction capability.

> Though likely to be significantly more expensive than conventional types, the normal arguments in favor of smart or course-correcting fuzes are that better accuracy leads to improved lethality, reduced collateral

damage, and reduced ammunition expenditure. The [last] in turn leads to improved logistics and savings in acquisition cost.

Course correction may be applied to range or line errors, or both—in the latter case the smart fuze being defined as a "2D" solution. In principle the mechanisms for correction can be implemented either in the fuze volume or in the body of the projectile. (Pengelley, 2001b, p. 40)

An inexpensive way to obtain artillery precision involves screwing GPS-based fuzes into existing projectiles to provide range-only corrections. The alternative integral approach would use purpose-built projectiles configured to accommodate both the GPS sensors and the associated control surfaces required for corrections in azimuth and range (Pengelley, 2000b).

Solid-state microelectronics have also revolutionized fuze technology for medium caliber "dumb" projectiles. Sweden (Bofors) has developed its 3P (prefragmented, programmable, proximity) round, which is to be used with 40-mm and 57-mm guns for land and air defense applications.

Leaving aside the enhanced power of the prefragmented projectile's payload, the 3P fuze provides yet another instance of the way fuze technology is progressing. The 3P fuze combines the proximity feature with time fuzing and impact modes, plus self-destruct if a target is not encountered. Not content with combining all these functions in one fuze body, the 3P displays one further innovation.

The 3P fuze is set automatically and remotely while it is entering the gun chamber, a mere instant before firing. By operating a control console as the target is engaged, the gunner can select the appropriate fuze function to suit the tactical scenario. Coded signals and data are then induced into the fuze as it enters the chamber.

As one example of the capabilities of the 3P fuze, there are three proximity modes. One is straightforward proximity, with the fuze ready for use after the projectile is fired once the usual muzzle safeties are met. However, under some circumstances this might render the fuze prone to electronic countermeasures so one 3P function is to keep the fuze in a dormant state until a pre-selected range gate has been passed, to keep any possible interference to a minimum. For both of these two modes the fuze maintains impact and self-destruct functions, while a third option renders the impact mode a priority while maintaining the gated proximity capability. The 3P fuze can also be programmed as a time fuze or it can be switched off altogether if the projectile required is a kinetic armor-piercing device. (Gander, 2000b, p. 22)

Switzerland (Oerlikon Contreves) has also developed an instant programmable fuze, called Ahead, which has the same objectives and modes as the 3P. But Ahead is programmed after the round is fired which adds an element of precision:

Why? Simply because the actual speed of each round is taken into account. Instead of being programmed in the gun chamber the Ahead receives timing instruction through three induction coils mounted on the muzzle of the barrel: a set of two coils detects the speed of the round (by measuring the time taken by the round to travel between the two coils), sends the information to a computer which, in combination with data received by the fire control radar, sends setting time datum to the third coil which in turn injects it into the round by induction.

This added precision enables each round in a salvo to be programmed to explode exactly in any desired position in space (in the same plane as the others or conversely in a "pearl string" pattern). Basically intended for air-defence purposes, both the Ahead and the 3P can be used as anti-personnel weapons: suffice to fire them at a shallow angle and have them detonate at the required distance (Gander, 2000b, p. 23).

Despite the introduction of electronic fuzes, "mechanical fuzes continue to be manufactured by the millions. It seems that every manufacturer of artillery ammunition also produces copied or licensed examples of impact fuzes to go with their products" (Gander, 2000b).

Once a mechanical fuze line has been established it can be kept going almost indefinitely with the knowledge that little need be expected in the enhancement line to interrupt production flows. Most existing impact fuzes are merely improved versions of designs dating back many decades, many of them incorporating a selectable delay function. Most of those improvements have only been introduced to cater for the increased power of propellant charges over the years (Gander, 2000b, p. 27).

8. Accuracy

A principal line of advancement in indirect-fire systems is improving fire precision. Better accuracy will be achieved by improving exterior ballistics and by knowing the precise locations of the indirect-fire system and the target. And more significantly, accuracy will be increased by midcourse guidance, which uses GPS techniques that carry over to improve terminal guidance as well.

a. Exterior Ballistics

The biggest problems in producing more accurate firing data for guns are meteorology prediction, which has been discussed, and MV prediction, which is difficult to achieve. Guns are fitted with MV measuring devices to know the velocity of every round fired.

> With the trend to the use of long barrels in order to achieve very long ranges, there is a possible need for a muzzle reference system, as already used on tank guns. A 52-caliber 155 mm barrel, about eight metres long, is liable to bend by several mils when it is hot and is being unevenly cooled by air movement. Using a laser reflected back from a mirror mounted above the muzzle would allow this deviation to be measured and incorporated in firing data.
>
> Various other errors, while relatively small compared to [meteorology] and MV variations, are likely to have a significant cumulative effect at very long ranges. The measurement of variations in shell weight, chamber temperature and charge temperature is possible, but transmitting the data from the gun to the battery computer before firing data are computed would probably take too long. The obvious solution is to provide ballistic computation on board the gun itself, and this is certainly feasible if the size and cost of computers reduce at the current rate (Manson, 1997, p. 132).

b. Location: Gunner and Target

Artillery seeks answers to two basic questions: Where exactly am I? And where is the target? Three electronics-based systems provide the main answers: GPS, electronic computer, and ring-laser gyro. All three combine to deliver accurate data for all types of artillery fire. Artillery, like other land forces, has come to rely heavily on GPS for land navigation. However, too much reliance on GPS can involve potential hazards:

> One is that the gunner relies on precise location data to provide accurate fire. While artillery can still dominate any battlefield, the battlefield has become a much more dangerous environment for the gunners, even if they are protected under armor on self-propelled systems. Artillery location radars…can immediately detect when a battery, or even an individual gun or mortar, opens fire. Computing and presenting a precise ground location for counter-battery activity takes only seconds following that initial detection. Artillery, even when towed, therefore has to resort to "shoot and scoot" tactics to survive. Hence it becomes paramount that the first rounds dispatched are effectively on target. The times needed for the former fire correction procedures are no longer available. It therefore follows that the gunner has to be provided with accurate gun location data to deliver accurate fire.
>
> This self-location factor remains equally important even during low-key operations where the chances of retaliation against artillery missions are low such as those recently undertaken in the Balkans. Rounds that miss the target are then more likely to create collateral damage and casualties of the wrong sort, so the need for overall artillery accuracy remains paramount.
>
> While GPS normally provides location data good enough for casual users such as yacht owners, gunners need something more accurate. They therefore employ limited access GPS codes that can deliver very precise fixes, so precise that it would seem to preclude the need for any other artillery navigation or survey systems. But it would be dangerous to rely on GPS indefinitely. In time of war, access to GPS satellite data could become very difficult if not impossible. Frequencies could be jammed or important codes garbled by the opposition who would no doubt do their utmost to eliminate GPS satellites entirely during the opening stages of what could become Star Wars. The possibilities of such actions are high, so total reliance on GPS during future conflicts would be most foolhardy. (Gander, 2001, p. 8)

Combining barrel pointing data and towed gun or self-propelled vehicle platform data can provide the gunner with the location and aiming data he needs (Gander, 2001).

Indirect fire has almost always relied on an observer remote from the gun position to detect and identify targets and to judge effectiveness of the fire mission by observing the fall of shot:

> The classic image of the artillery forward observer is of an individual or team concealed in a trench or behind cover and observing a wide area through binoculars. That image still holds true but these days the binoculars are only one item employed. In addition, in many cases the forward observer is now mobile, carrying out the observation duties from a vehicle or even a helicopter. Mechanised warfare dictates that the artillery has to keep up with the leading armored formations. While the guns may be deployed some way behind the forward combat contact line they still need observers to find targets and to direct fire.
>
> Within mechanised formations special forward observation vehicles have evolved. The vehicles differ little in appearance from other armored support vehicles, such as armored personnel carriers, and are almost always specialised variants. This makes logistics a bit easier, but the main reason is that the observers specialised functions must not be apparent to an enemy as that would invite unwanted attentions.
>
> The exact position of the observer also has to be known. There are numerous methods of doing this, from plain map reading to GPS, if it is accessible. At all times recourse could be made to local survey using some of the instruments involved in observation. (Gander, 2001, p. 14)

Apart from their general vulnerability, a main drawback of the use of forward observers is that they are limited by what they can see and that they rarely operate beyond the forward edge of the battlefield. This limits what long-range artillery can achieve. UAVs equipped with real-time sensors such as stabilized thermal imagers or video cameras can transmit image data to the command station for processing. While artillery commanders welcome data provided by UAVs, which are far removed from their control, there are often instances when rapid response or target confirmation are necessary. In such cases, direct UAV control by artillery commanders is preferred (Gander, 2001).

c. Trajectory Corrections

The above ballistic improvements will not achieve the accuracy needed to hit point targets. Because so many variables act on an artillery projectile, no two projectiles will follow the same path:

> Slight variations in atmospherics, wind direction and propellant batches (to name but a few items likely to introduce variations) will mean that salvos will land over a footprint area roughly oval in outline. The longer the range the larger the area of that footprint will grow until incoming projectiles are so dispersed they will be unable to cover the target with the density of hits necessary to be effective. (Gander, 2000c, p.16)

Longer barrels, base-bleed units, and larger propellant charges can deliver to ranges of about 50 km. The resultant footprint is too large to ensure target saturation unless more projectiles are fixed to compensate. A trajectory correctable munition (TCM), a 155-mm projectile developed by Bofors, relies on GPS to know where it is precisely in its trajectory and compares that position with where it should be to fall within the required footprint area. Course corrections are introduced to make the two positions coincide:

> Range corrections are relatively simple to introduce by firing long and then deploying aerodynamic spoilers at the projectile nose to create drag and cause the projectile to fall into the required area.
>
> Azimuth corrections are more problematic as the complexities of introducing guided missile aerodynamic surfaces are usually too great to be considered. The TCM will employ two banks of impulse charges along the body, to be fired selectively to kick course corrections into being at the appropriate instant. (Gander, 2000c, p. 17)

U.S. test of rockets fired from a guided MLRS (GMLRS) in the mid-1990s was expected to achieve 10-m CEP delivery accuracy using a GPS-aided inertial guidance system (Pengelley, 1997d). The results were not revealed.

Course correction would also be useful in delivering autonomous submunitions over a general target area. The carrier projectile payload would be parachute-retarded submunitions with IR, millimetric, or both sensors to look for likely targets and terminal-homing, sensor-fuzed munitions or a millimeter-wave terminal-homing system. Such submunition weapons include the U.S. Sadarm, Swedish/French Bonus, German DM702 SMArt 155, and Russian Motiv-3M (Gander, 2000c; Pengelley, 2000b).

As demonstrated in Afghanistan, battlefield lasers for marking targets will be useful when employed in conjunction with GPS. With GPS coordinates of the ground-based laser and target range and azimuth from the laser designator, a weapon-delivery platform, or the weapon itself, could know the target coordinates. The bomb or missile could be equipped with a laser seeker for semiactive homing or it could use GPS guidance.

(1) Air-Delivered GPS Guided Munitions

New guidance technology that makes aircraft munitions more effective can do the same for ground-launched rockets. Table 9.2-2 shows the delivery accuracy of Air Force weapons that carry integrated GPS/inertial navigation system guidance.

Table 9.2-2. Accuracy of Air-Delivered GPS Guided Munitions[a]

Designation	Guided Munition	CEP
GAM	GPS-Aided Munition[b]	6.1 m[c]
JDAM	Joint Direct Attack Munition[d]	6.5 m[c]
AGM-86D	Conventional Air Launched Cruise Missile	5 m[e]

[a] Sources: Braybrook, 1998; Scott, 1999; Hewish, 2000b.
[b] GAM was designed as a tail kit for the 2,000-lb Mk 84 general purpose (GP) bomb.
[c] Achieved in tests.
[d] Guidance kit converts GP bombs to precision-guided weapons; replaced GAM.
[e] Expected.

The GBU–15 equipped with the inertial terrain-aided guidance (ITAG) system is intended to provide a 3-m CEP:

> [The ITAG] augments the INS/GPS package with a Doppler beam-sharpened radar altimeter that can accurately measure the ground profile from high altitude, allowing an onboard computer running batch-recursive algorithms to match the weapon's flight-path with stored digitized three-dimensional maps (derived from SAR measurements) in real time. (Hewish, 2000b, p. 52)

(2) GPS/Inertial Navigation System Guidance

MEMS are expected "to revolutionize the way the military senses and exploits its environment":

> MEMS technology can revolutionize RF circuitry by replacing discrete components such as filters, oscillators, semiconductor switches and capacitor networks with much smaller devices that are integrated with signal-processing electronics (Hewish, 2001c, p. 26).

> Conventional inertial measuring units (IMUs) based on mechanical, ring-laser, or fiber optic gyros, and using traditional acceleratometer designs have generally proved inadequate when subjected to the shock loadings experienced during gun firing. Several programs are, therefore, adopting MEMS-based IMUs to provide the ruggedness required, combined with a reduction in volume. (Hewish, 2001c, p. 24)

A combined inertial measuring unit* and GPS receiver with a total volume of 130 cm^3 was integrated into a 5-inch shell and successfully fired early in 2000. Early in 2001, a silicon inertial measuring unit, which survived shocks of up to 16,000 g during firing trials of specially adapted 81-mm mortar rounds, functioned effectively during first flight of a guided all-up Navy Extend Range Guided Munition. An Army-Navy effort is underway to provide a common inertial measuring unit that could equip multiple types of missiles and precision-guided munitions (Hewish, 2001c).

We expect that generation-after-next smart rounds will largely be GPS guided; trajectory corrections will be sent to moveable fins to produce accuracy within a few meters of the aim point (Biass and Ripley, 1999).

The possibilities of the integration of GPS and an inertial navigation system for direct determination of the orientations of airborne sensors include those on guided missiles. This direct georeferencing determines latitude, longitude and elevation of the platform. The integration of GPS/inertial navigation system for direct georeferencing of aerial imagery was summarized by a scientist at the Finnish Geodetic Institute:

> The data collection for direct georeferencing involves at least three different types of sensors; the imaging sensor, the GPS receivers and the inertial measuring unit (IMU). It is necessary to relate all measurements to the same time scale. Therefore time signals are exchanged between the different sensors. This time synchronisation is very important, because a very small timing error can cause a big positioning error. The

* In simple terms, an inertial measuring unit contains gyroscopes and acceleratometers that measure rotation and acceleration, respectively. An inertial navigation system contains an inertial measuring unit and a navigation computer that uses the inertial measuring unit information to provide course corrections to a missile/projectile guidance control.

final positioning accuracy strongly depends on the GPS accuracy, which means that cycle slips and especially big gaps that occur during GPS data collection will deteriorate the quality of the final solution.

The general idea behind the GPS/INS integration is that both systems help each other. The INS system fills up gaps in the GPS data and it helps finding cycle slips, while the GPS provides initial values and updates for the INS system [see Figure 9.2-3]. This way the good long-term stability of the GPS is combined with the good short-term accuracy and high frequency of the INS. (Bilker, 2001)

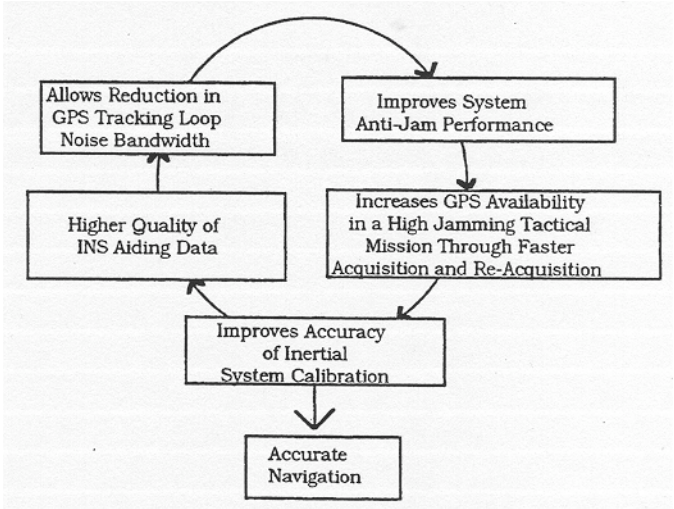

Figure 9.2-3. The Synergy of GPS/Inertial Navigation System Integration (Source: Sklar, 1996)

Automatic-navigation and gun-pointing systems are almost standard on new-generation 155-mm self-propelled guns, such as the British AS–90 (Braveheart), the German PzH (Panzerhaubitze) 2000, and the French Caesar. They will likely spread to towed weapons and be fitted as upgrade items to existing self-propelled weapons: "They use GPS and [INS] systems to reduce the time it takes to prepare guns to fire after halting to a matter of seconds. Data link communications to battery command posts also allow the transmission of fire mission data to take place in seconds" (Biass and Ripley, 1999, p. 38).

Jamming GPS

The potential disadvantage of GPS-guided munitions is their susceptibility to jamming. Inexpensive, easily proliferated jammers can prevent signal acquisition. Since GPS satellites are more than 17,700 km from a GPS receiver, their signals are weak compared to the signal of even a low-power jammer. Signal processing, directional multielement antennas, and high-power pseudolites—ground stations or UAVs—are ways to reduce the susceptibility of GPS to jamming (Richardson, 1998a; Braybrook, 2000).

(3) LIDAR Seekers

LIDAR or LADAR (LAser Detection And Ranging) in its simplest form is the laser range finder. Like a radar, the laser range finder measures the time interval between pulse emission and the arrival of the reflected pulse; that interval plus knowledge of the speed of light enables target range to be calculated. LIDARS are very sensitive to atmospheric changes and therefore are useful as accurate wind and particulate monitoring devices. LIDAR systems operating at about 1 μm can provide high-resolution imagery based on range and intensity:

> The resulting images are not susceptible to the variations common in imaging infrared images, allowing autonomous target acquisition to be achieved using simpler algorithms than those needed to handle infrared scenes. As a result, LIDAR seekers, probably based on uncooled diode-pumped solid-state lasers, could soon be providing autonomous precision guidance for next-generation air-to-surface weapons. (Richardson, 1999a, p. 46)

LIDARS and their applications are closely guarded by the international defense community, but it is known that R&D is being directed at LIDAR seeker technology suitable for air-to-air, air-to-surface, surface-to-air, and surface-to-surface munitions. Current seekers are about 200 mm in diameter, but new submunition diameters will be

about 75 mm. Munitions with LIDAR systems will include the LIDAR sensor, GPS receiver, an inertial measuring unit, and an on-board computer and data-storage device (Plaster and Wos, 2001).

The Low Cost Autonomous Attack System (Locaas), which has been in development for a decade, is a small, guided, winged submissile intended to attack ground targets.

> This joint U.S. Army/USAF weapon carries a guidance system based on an inertial/GPS unit plus a LIDAR seeker able to form a three-dimensional image of a target to ensure positive target identification. Potential targets include tanks and other armored vehicles, surface to air missile sites and ballistic missile transporter/erector/launchers. The Locaas is powered by a small turbojet engine, and attacks its target using a multi-mode explosively-formed warhead. Potential delivery systems include the AGM–130, AGM–154 missiles, MLRS rockets, [ATACMS] and SUU–64 tactical munitions dispensers. (Richardson, 1999a, p.49)

(4) Automatic Target Recognition

The task of automatically detecting a target in the image from an electro-optical sensor or high-resolution radar is complex:

> ATR algorithms must cope with three-dimensional objects the exact shape of which may be poorly known, and which may appear at any orientation, under widely varying lighting and visibility conditions.
>
> The traditional approach to automatic target recognition is to separate a target from its surrounding area by extracting a silhouette, then to recognise its shape from features describing the outline of the silhouette. Existing model-based automatic target recognition systems use large databases that contain information on the appearance of each individual target at a number of aspect and depression angles. As the number of targets to be recognised on the battlefield increases, so does the size of this database making it difficult to achieve model retrieval and matching in real time. (Richardson, 1998b, p. 8)

To speed up the recognition process, model-based or neural-network-based systems show promise of reliable target detection with low false-alarm rates. Aircraft-mounted ATR systems can detect targets for subsequent attack by conventional guided weapons. Another application for ATR is in missile seeker heads:

> Although engineers face the task of packing the sophisticated electronics needed to identify a target into a throw-away item of hardware, their task is being made easier by the growing use of mid-course guidance. If a gyro navigation system, GPS receiver or other system can steer the missile to a precisely defined location, the task of the seeker and the complexity of its automatic target recognition algorithms will be significantly reduced. (Richardson, 1998b, p. 12)

The Army has been testing pattern-recognition algorithms, originally developed to provide passive-imaging IR sensors with ATR capability, to determine whether they could be used with LIDAR sensors:

> The goal is to demonstrate ATR technology which will allow the development of weapons able to operate in limited search, lock on before launch, and lock on after launch modes, combining a rapid response with low false alarms. An effective ATR capability could provide the soldier with a direct-attack fire and forget weapon able to acquire targets after launch, automatically re-acquire targets after loss of lock, recognise friendly forces and select the optimum aim point for warhead effectiveness. (Richardson, 1999a, p.49)

(5) Fiber-optic Missiles

Wire-guided missiles have been in service for many years. Despite their success—the TOW antitank missile, for example—and despite some major advantages—positive control of an in-flight missile, immunity to counter-measures, and virtually assured targeting precision—cable guidance techniques have not been widely adopted.

> The concept of effectively enlarging a missile's operational envelope by relaying a picture of its target aim to the operator has particular benefits, principally through making possible the engagement of indirect-fire, non-line-of-sight (NLOS) targets. [See Figure 9.2-4.] But the limited bandwidth of metal cable, combined with lack of suitable imaging systems that permit discernment of targets in poor visibility conditions, often precluded use of such concepts. In the earlier days the requisite enabling technologies were somewhat immature. (Witt, 2000, p. 28)

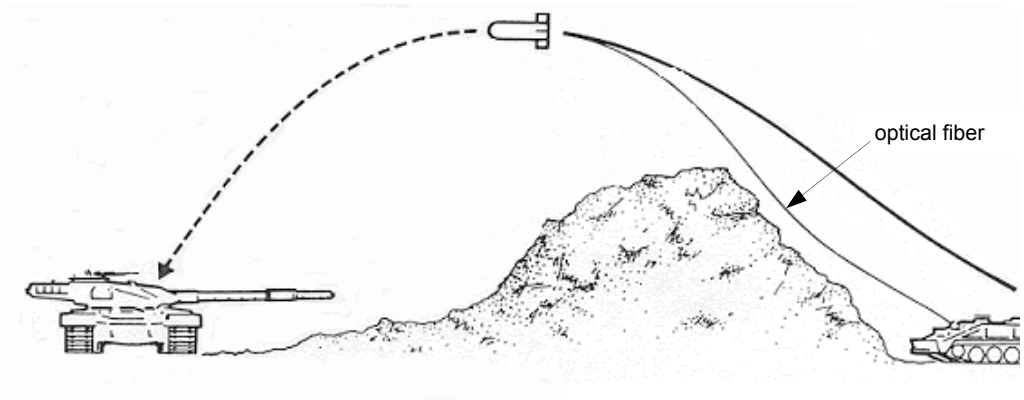

Figure 9.2-4. Fiber-Optic Missile

Optical cable, which could be reeled out behind rounds, was considered since it had demonstrated the ability to convey images and commands long distances, and it would give operators chance to get eyes-on-target from a camera in the nose as the missile approached the target (Biass and Ripley, 1999; Braybrook, 2000).

The U.S. developed the fiber-optic guided missile (FOGM) and the Enhanced FOGM. A typical graded-index, multimode optical fiber with protective cladding has a diameter of 1/8 mm. Transmission over relatively inexpensive fiber-optic media at a data rate of 2.488 Gbit/sec (compared to 2 Mbit/sec, the practical upper limit for copper-cored cable) can be increased by a factor of 23 through the use of color windows, "which are fundamentally a form of wavelength division multiplexing (WDM). It thus becomes apparent that, providing the cable is practically deployable, it is more than capable of simultaneously relaying imagery in one direction and command guidance information in the other" (Witt, 2000, p. 28).

At the same time, France, Germany, and Italy jointly developed a European fiber-optic missile, Polyphem. Their experimentation succeeded in pushing optical-fiber and spooling technologies to the point where they could be applied to long-range (60 km) weapons able to carry a wide variety of warheads (Hewish and Pengelley, 1996).

The Polyphem has been demonstrated at ranges over 60 km. Unspooled cable weight is less than 5 kg. The Polyphem seeker operates in two modes: "in the unlocked position, the operator can swing the seeker to view a specific point while the missile flies its natural course; in the locked mode, the seeker is slaved to the controls and all actions to steer the seeker will actually steer the missile." The demonstration testing prompted replacement of the TV imager with IR sensors (Witt, 2000). Figure 9.2-5 illustrates the kill sequence of the Polyphem in a naval

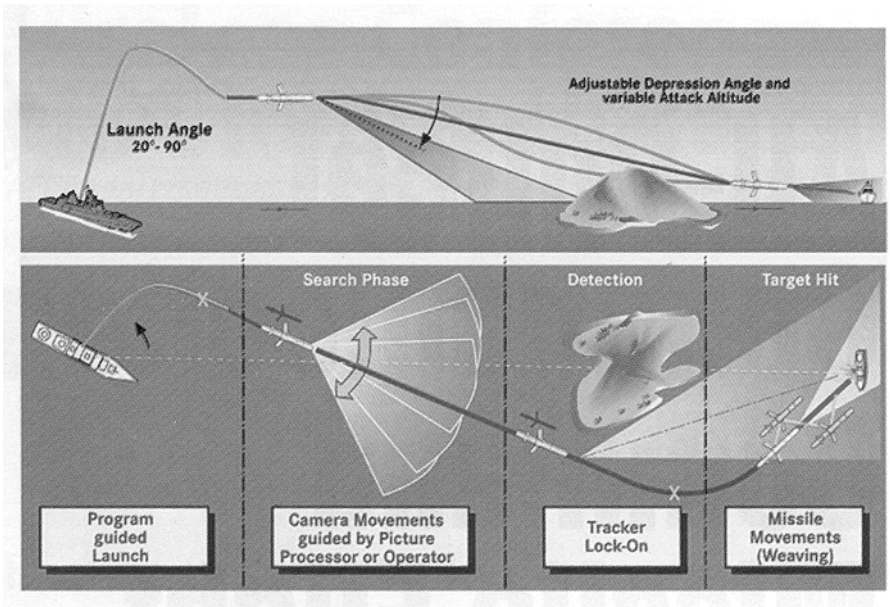

Figure 9.2-5. Polyphem Kill Sequence in a Naval Engagement (Source: *Signal*, 2001)

engagement, where the missile scans for, locates, and destroys a designated target. High accuracy through each flight segment is ensured by interaction between the missile and the launch command.

The Europeans are now looking at mortar applications for optical-fiber guidance. Fiber-optic controlled missiles are in service or in development in Brazil, Japan, Spain, and Israel (Witt, 2000).

LIST OF DCT/S&T TECHNOLOGY DATA SHEETS
9.2. INDIRECT-FIRE SYSTEMS

Soft-Recoil Guns/Howitzers DCT-9-63
Smart Fuzes DCT-9-63
Autonomous Projectile/Rocket DCT-9-64
Hybrid GPS/Inertial Navigation System Guidance DCT-9-65
LIDAR (LADAR) Seeker DCT-9-66
Automatic Target Recognition DCT-9-67
Fiber-Optic Missile DCT-9-68

DCT/S&T DATA SHEET 9.2. SOFT-RECOIL GUNS/HOWITZERS

Critical Technology Parameter	Electro-rheological fluid recoil systems whose fluid viscosity can be varied electrically and can transition from a liquid to a near-solid state and back again in milliseconds.
Critical Materials	Nonabrasive metal particles.
Unique Test, Production, Inspection Equipment	None identified.
Unique Software	None identified.
Major Commercial Applications	Many industrial and automotive dampers, steering pumps, and actuators; dampers for cross-country and downhill mountain bikes.
Affordability Issues	None identified.

BACKGROUND

Electro-rheological fluids stiffen resistance in response to applied voltage. Novel designs of shock absorbers based on the advanced use of electro-rheological fluids can change their damping parameters in a thousandth of a second; new power steering systems can respond at 500 Hz with the same technology.

DCT/S&T DATA SHEET 9.2. SMART FUZES*

Critical Technology Parameter	Electronic programmable GPS fuzes that combine standard detonation functions—sensing, timing, and initiating—with course correction.
Critical Materials	MEMS for timers and inertial sensors to diminish power demands.
Unique Test, Production, Inspection Equipment	None identified.
Unique Software	Program that enables a single unit to have proximity, point-detonating, post-impact delay, and electronic-time fuzing.
Major Commercial Applications	None identified.
Affordability Issues	Course-correcting fuzes are expected to be much more expensive than conventional types, but the resultant better accuracy leads to improved lethality, reduced collateral damage, and reduced ammunition expenditure.

BACKGROUND

Force reductions have driven the fire-support community to focus on higher levels of automation, rates of fire, and precision, as well as lower costs of acquisition, logistics, and training. The projectile cavity, where the fuze is seated, is the logical place to put precision-related enhancements.

* See Section 2.3 for more on fuzes.

DCT/S&T DATA SHEET 9.2. AUTONOMOUS PROJECTILE/ROCKET

Critical Technology Parameter	Artillery projectile or rocket that will use GPS either alone or for mid-course guidance of a terminally guided or sensor-fuzed weapon with a delivery accuracy of 10-m CEP. The projectile relies on GPS to know where it is in its trajectory and compares that position with where it should be to fall within the required footprint area. Range and azimuth course corrections are introduced to make the two positions coincide.
Critical Materials	None identified.
Unique Test, Production, Inspection Equipment	None identified.
Unique Software	Program to initiate course corrections at the appropriate instant in two design concepts: (1) activating two banks of impulse charges along the body or (2) activating spoiler vanes stowed in the fuze body.
Major Commercial Applications	None identified.
Affordability Issues	Increase in unit cost of projectiles or rockets would be outweighed by the savings in conventional rounds required for equal effectiveness.

BACKGROUND

Ballistic improvements will not achieve the accuracy needed to hit point targets. Because so many variables act on an artillery projectile, no two projectiles will follow the same path. Slight variations in atmospherics, wind direction, and propellant batches (to name but a few items likely to introduce variations) will mean that salvos will land over a footprint area roughly oval in outline. The longer the range the larger the area of that footprint, until incoming projectiles are so dispersed they will be unable to cover the target with the density of hits necessary to be effective.

DCT/S&T DATA SHEET 9.2. HYBRID GPS/INERTIAL NAVIGATION SYSTEM GUIDANCE*

Critical Technology Parameter	Position accuracy of an integrated GPS/inertial navigation system for guided munitions. GPS and inertial navigation system help each other: inertial navigation system fills gaps in the GPS data and helps finding cycle slips, while GPS provides initial values and updates the inertial navigation system.
Critical Materials	None identified. MEMS-based inertial measuring units provide the required ruggedness and reduced volume over conventional inertial measuring units.
Unique Test, Production, Inspection Equipment	None identified.
Unique Software	Program for integrating inertial navigation system with GPS. Trajectory corrections will be sent to movable fins to produce the high degree of accuracy.
Major Commercial Applications	Land, sea, air, and space vehicles.
Affordability Issues	None identified

BACKGROUND

Radio-frequency technology can be revolutionized by replacing discrete components such as filters, oscillators, semiconductor switches and capacitor networks with much smaller devices—MEMS—that are integrated with signal-processing electronics. MEMS-based inertial measuring units combined with GPS receivers offer an important advance in precision engagement: the integration of GPS and inertial navigation systems for direct determination of the orientation of airborne sensors, include those on guided missiles.

* See Section 16.1 for more on GPS, inertial navigation systems, and hybrid GPS/inertial navigation systems.

DCT/S&T DATA SHEET 9.2. LIDAR (LADAR) SEEKER*

Critical Technology Parameter	LIDAR seekers will form 3–D images of various tactical targets such as tanks and other armored vehicles. As part of a LIDAR system that also includes a GPS receiver, an inertial measuring unit, and an on-board computer and data-storage device, LIDAR seekers will provide precision terminal guidance for air-to-surface, surface-to-surface, surface-to-air, and air-to-air munitions.
Critical Materials	Common materials for solid-state lasers include Nd:YAG and Nd:glass. Tunable solid-state lasers are made from alexandrite and titanium.
Unique Test, Production, Inspection Equipment	Numerically controlled machine tools.
Unique Software	Validated models including target and environmental data.
Major Commercial Applications	Active-laser profiling is used in automated inspection and selection of parts, remote sensing, and measurement.
Affordability Issues	Once LIDAR technology is established, costs will fall, which should allow LIDAR seekers to be used in expendable munitions.

BACKGROUND

LIDAR systems operating at about 1 μm, but not limited to this wavelength, can provide high-resolution imagery based on range and intensity. The resulting images are not susceptible to the variations common in imaging IR images, allowing autonomous target acquisition to be achieved using simpler algorithms than those needed to handle infrared scenes. As a result, LIDAR seekers, probably based on uncooled, diode-pumped, solid-state lasers, could soon be providing autonomous precision guidance for next-generation air-to-surface weapons.

* See Section 2 for more on Active Laser Seeker and Section 11 for Solid State Lasers.

DCT/S&T DATA SHEET 9.2. AUTOMATIC TARGET RECOGNITION*

Critical Technology Parameter	Automatically detect a target in the image from an electro-optical sensor—IR or LIDAR—or high-resolution radar.
Critical Materials	None identified.
Unique Test, Production, Inspection Equipment	None identified.
Unique Software	Algorithms that detect targets whose exact shape may be poorly known and that may appear in any orientation under varying lighting and visibility conditions.
Major Commercial Applications	Image-processing technologies have applications in law enforcement, robotics, transportation, and medicine.
Affordability Issues	Cost of ATR operational capability is expected to be outweighed by the major advance in target acquisition by search systems and weapon seekers.

BACKGROUND

The goal of ATR technology is to develop weapons that are able to operate in limited-search, lock-on-before-launch, and lock-on-after-launch modes, combining a rapid response with low false alarms. An effective ATR capability could provide the warfighter with a direct-attack, fire-and-forget weapon able to acquire targets after launch, automatically reacquire targets after loss of lock, recognize friendly forces, and select the optimum aim point for warhead effectiveness.

* See Section 2.5 for more on ATR.

DCT/S&T DATA SHEET 9.2. FIBER-OPTIC MISSILE

Critical Technology Parameter	Fiber-optic missile whose reeled-out optical cable can convey images and commands at ranges of 60 km enable operators to get eyes-on-target from a camera in the nose as the missile approaches the target.
Critical Materials	The cable, whose unspooled weight is less than 5 kg and diameter is 1/8 mm, is a typical graded-index, multimode optical fiber with protective cladding.
Unique Test, Production, Inspection Equipment	None identified.
Unique Software	None identified.
Major Commercial Applications	None identified.
Affordability Issues	Cost of fiber-optic missiles is expected to be outweighed by their ability to provide precision terminal guidance at NLOS targets.

BACKGROUND

Wire-guided missiles have been in service for many years. Despite their success—the TOW antitank missile, for example—cable guidance techniques have not been widely adopted despite some major advantages: positive control of an in-flight missile, immunity to countermeasures, and virtually assured targeting precision. In the past, the limited bandwidth of metal cable, combined with lack of suitable imaging systems that permit discernment of target in poor visibility conditions, often precluded use of such concepts. Further, the requisite enabling technologies were somewhat immature.

SECTION 9.3—RECONNAISSANCE, SURVEILLANCE, AND TARGET ACQUISITION

Highlights

- Even with the availability of UGS, UAVs, and other RSTA systems, continued use of ground reconnaissance vehicles is justified by their advantages: all-weather operations; not affected by air defense; on-site human judgment; ability to retrieve material; and ability to operate in areas obscured from aerial observation.
- Thermal-imaging seekers with uncooled detector arrays are expected to show a 10□ improvement in thermal sensitivity and twice the target-acquisition range of current IR seekers.
- UGSs—acoustic, seismic, optical, electro-optical, and magnetic—incorporating microelectronic technology in long-life, inexpensive sub-cubic-centimeter volume and deployable in large numbers (thousands) will be a principal source of situational awareness; UGSs will be effective in detecting and classifying targets and transmitting target data by wireless communication links.
- Evolving radar and acoustic systems will improve counterbattery operations.
- UAVs fitted with EO, IR, or SAR can provide continuous imagery via satellite data link to tactical operators or force commanders; UAV sensors provide precision targeting, reconnaissance, intelligence collection, and bomb damage assessment.
- Small UAVs are particularly attractive because of their reduced susceptibility to air defense; their data can be linked directly to a ground station or via an overhead relay (maybe another UAV).
- A satellite constellation of 24 low-orbit spacecraft would provide 15-minute revisit time to most areas of Earth; the satellites' SAR would be able to classify tactical targets with high resolution in scan mode and in spot mode; ground movement target indicator would detect and track movers with a small target location error.

OVERVIEW

For target acquisition, tanks and other armored vehicles will be outfitted with advanced forward-looking infrared (FLIR) with extended-range optics and panoramic thermal-imaging sights. These primary sensors are especially suitable for use at night: they are passive, long range, less sensitive to atmospheric conditions, and able to penetrate camouflage smoke. These armored fighting vehicles will also have ATR and CID to positively identify friendlies. Navigation will likely have an inertial navigation system with ring-laser gyros or fiber-optic gyros complemented by the GPS (Hilmes, 1994; Hewish and Pengelley, 1997).

Beyond the just-noted target-acquisition equipment on armored vehicles, the RSTA topics in this section include scout/reconnaissance vehicles, thermal imaging, UGS, weapon-location systems, other ground-based systems, airborne SAR, UAVs, and satellites. Sections 9.1.C and 9.1.D.4 in this document discuss robotic vehicles, whose primary mission is expected to be RSTA. More on RSTA-related technologies can be found in Section 11, Lasers and Optics; Section 17, Sensors; and Section 19, Space Systems.

RSTA systems will provide targeting cues to units of tanks and future combat vehicles via a computerized battle-management system that integrates inputs from various sensors with a database related to terrain, own forces, and enemy forces (Sheriff, 1992). The RSTA systems include armored scout/reconnaissance vehicles, UGS, UAVs, and perhaps satellites.

A. SCOUT/RECONNAISSANCE VEHICLES

Notwithstanding the availability of UGS, UAVs, and other RSTA systems, ground-reconnaissance vehicles are necessary for continuous operations. They can operate in all weather; they are not affected by air defenses; they have on-site human judgment; they can retrieve material; and they can operate in areas obscured by foliage, terrain, or camouflage from aerial observation (Pengelley, 1998a). These ground vehicles in Western armies are expected to be equipped with some of the following items:

- High-resolution CCD–TV (charge-coupled device-television) camera with built-in image intensifier and zoom for daylight use;
- IR thermal-imaging camera for zoom in the near-IR (8–12 μm) band;
- Laser range finder;
- Automatic target recognition;
- Optronic sensors complemented by low probability of intercept (LPI) millimeter-wave radar for battlefield surveillance;
- Sensors mounted on elevating platforms;
- Acoustic sensors;
- Navigation and positioning system based on GPS integrated with a gyro compass or hybrid inertial platform;
- Combat identification or reliable IFF; and
- Well-developed communications, including crypto capability, for transmitting data (Bianchi, 1999; Pengelley, 1998a; Taylor, 1994/1995; Hewish and Pengelley, 1998, Hewish, 1998b).

B. IMAGING

A recent journal report on thermal-sight technology described advances across the board in long-wave infrared (LWIR), mid-wave infrared (MWIR), and short-wave infrared (SWIR) bands (Pengelley and Hewish, 2001):

- Second-generation LWIR imagers provide more than double the recognition and detection performance of first-generation thermal imaging sights in the UK.
- Uncooled detectors are at least 10× as sensitive as those developed only a few years ago, and they have one-quarter the pixel size.

Future high-performance uncooled imagers are expected to use arrays of 1,024 × 1,024 elements or greater with pixel size of about 15 μm.

- In networked sensors, a 640 × 480-element uncooled FLIR with large field of view (FOV) searches for and acquires targets, which are handed over to a high-resolution gated SWIR camera. The camera is coupled with an inexpensive, covert, eye-safe, microlaser range-finder/illuminator that can identify targets at ranges of 3 km or more in reasonable weather (Pengelley and Hewish, 2001).
- An ongoing U.S. advanced technology demonstration involves a testbed for defining future multiband sensors. This multifunction staring sensor suite (MFS3) has a 20-cm aperture LWIR imager and a staring MWIR imager with a 640 × 480-element cooled array. The MFS3 conducts rapid wide-area search over 180 deg in azimuth and 9 deg in elevation in 9 seconds. Long-range target identification employing ATR algorithms for multispectral detection and shape recognition takes place while on the move. The result, called "target DNA," removes the need for continuous re-identification (Pengelley and Hewish, 2001).
- Besides IR thermal imaging, other imaging techniques of potential military use include multispectral imaging (MSI) and hyperspectral imaging (HSI). MSI involves the creation of multiple images of a scene or object by using ultraviolet, visible, and infrared spectra. With the proper wavelengths, MSI can be used to detect concealment and camouflage as well as thermal emissions. HSI, a passive technique that uses the sun or other independent source of illumination, creates a larger number of images (than MSI) from contiguous regions of the spectrum, typically with finer resolution. Remote sensing tasks that are impractical with MSI can be done by HSI. Examples are foliage penetration to detect troops and vehicles, bomb damage assessment of underground structures, and detection of chemical or biological weapons. (FAS, http://www.fas.org/irp/imint/hyper.htm, 11 October 2002).

C. UNATTENDED GROUND SENSORS

Advances in microelectronic technology have greatly expanded the types and volume of data that UGS can provide. High-speed digital signal processors running advanced algorithms permit real-time detection, estimated bearing, identification, and localization of air and ground targets. Adaptive thresholds are used to minimize false alarms from background noise and rain. UGS can employ acoustic/seismic, optical/electro-optical, and magnetic detectors as well as infrared break-beam devices (Hewish, 1998a; Hewish, 1998b). "Hosts of miniature, energy efficient sensors will be organized into highly intelligent stationary or mobile ad hoc networks." These sensors

"collectively detect potential targets before activating more sophisticated, multi-sensor packages that locate and classify or identify targets in spite of attempts to use camouflage, concealment, or deception to defeat detection" (Hopkins et al., 2000). It is not practical to use sophisticated sensors with large demands for power and communications. "Simple, inexpensive individual devices deployed in large numbers are likely to be the source of battlefield awareness in the future." The attention paid to networking and to information processing must increase sharply "as the number of devices in distributed sensing systems increases from hundreds to thousands and perhaps millions" (Hewish, 1998a).

The Army Research Laboratory is reported to be developing a tracker that combines the reports from the distributed network of sensors into a coherent picture of the battlefield (Hopkins et al., 2000). Such a level of situational awareness should enhance target acquisition.

In the late 1990s, there were many successful demonstrations of low-power wireless microsensors in military exercises of completely autonomous sensor nodes with power, processing, and communication in a *cubic centimeter* volume. Figure 9.3-1 shows autonomous sensors in a *cubic millimeter* volume, called "Smart Dust" (Pister, 2000).

Over the next 5 to 10 years, the following technologies are forecast to be included in a sub-cubic-centimeter (sub-cm^3) package unless otherwise stated:

- Low-Power Inertial Measurement—Inertial measurement units with better than micro-g acceleration sensitivity and close to Earth-rate rotation sensitivity will become widely available. Power requirements per axis will be below 100 μW.
- Microphones and Pressure Sensors—There will be a little change in microphone performance, size, or power. Existing hearing-aid microphones are close to the engineering limits of performance. More conventional pressure sensors, however, will come to achieve similar dynamic range and power levels as hearing aid microphones: ~90 dB and 10 μW.
- Biosensors—The ability to isolate and analyze chemical species, sequence DNA, and identify pathogens in a centimeter-scale laboratory is no doubt covered in several other papers. This field is still in its infancy, but it is clear that revolutions will occur in the coming decade.

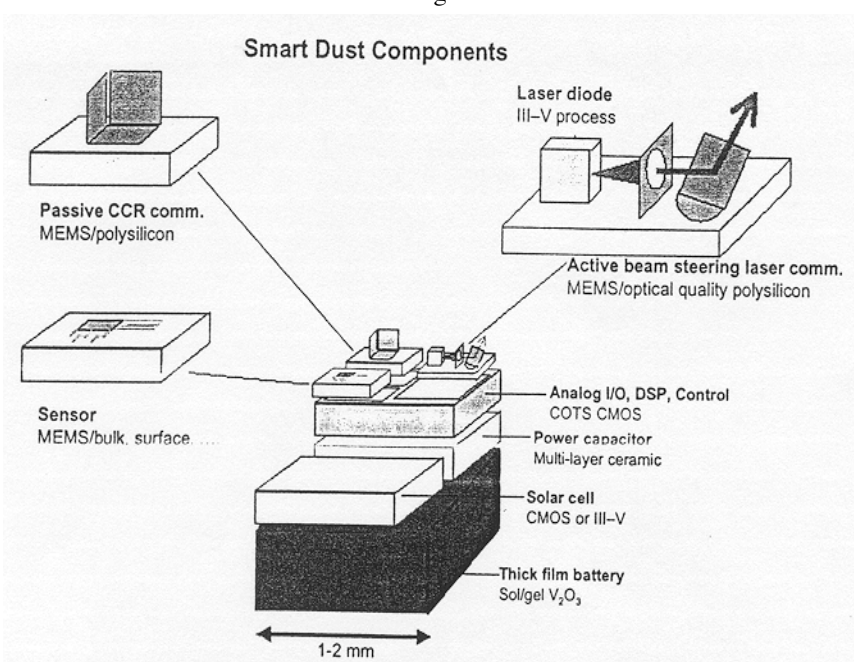

Figure 9.3-1. Smart Dust Components (Source: Pister, 2000)

- RF Communication—RF communication will improve in three ways relative to wireless sensor networks. First, low data-rate, short-range radios will be built in the 100 μW power range with communication capabilities similar to a cordless phone: 10–100 kbps, 10–100 m range.

  Second, extremely high data-rate burst transmission radios will be implemented in the 59–64 GHz oxygen-absorption band. Because these wavelengths are absorbed by oxygen, communication range is

limited to under a kilometer. This is ideal for many types of distributed sensor networks. With a 5-mm wavelength, MEMS relays and other tricks will be used to get reasonable antenna gain and directional communication. These radios will require at least tens of milliwatts (possibly watts) while on, but will have data rates above 1 Gbits/sec.

Finally, MEMS resonators will find their way into low-power MEMS radios. The range of these radios will be quite limited but still should be in the tens to hundreds of meters.

- Optical Line-of-Sight Communication—Early demonstrations from the Smart Dust program make it clear that communication across tens of kilometers with less than a milliwatt from a cubic-millimeter package will be achieved within the next 18 months. In fact, communication to aircraft or even satellites in low-Earth orbit will be possible from devices in the cubic-centimeter to cubic-millimeter range.
- Power Generation, Storage, and Scavenging—Power generation in the tens of watt range from cubic-centimeter generators burning hydrocarbons will be demonstrated in the next few years. At present, no approach to this problem seems to provide low power levels for extended periods of time, but perhaps an integrated solution where a high-power hydrocarbon-burner will charge batteries will evolve.

  Radioactive power sources have not yet received much attention in the low-power community, although they are quite standard in interplanetary systems. These systems have potential to provide tens of milliwatts of electrical power per gram for a decade or more. Application of MEMS to this area is likely to yield significant results, although environmental concerns over making many small "nuclear" devices will no doubt need to be thought through.

  I do not foresee any dramatic changes in energy storage technologies in the next 10 years. Batteries and capacitors are close to their theoretical limits.

  Integrated energy scavenging systems will be developed in across the cubic-millimeter to cubic-centimeter size scale, combining solar cells and/or vibrational motion converters with batteries and CMOS control electronics to provide a clear interface to power using systems.
- Delivery—Emplacement of sensor networks of this scale provides new options. A slingshot, for example, is sufficient to populate a good fraction of a square kilometer with marble-sized sensor nodes in a matter of minutes. More traditional delivery systems such as modified grenade or mortar shells [seem to be likely candidates] for distributing hundreds to thousands of sensors over many square kilometers in a very short time period. There is ongoing work to make MEMS survive the shock associated with being fired from a gun.

  Micro air vehicles (MAVs) provide one of the most intriguing delivery options. Existing MAVs are capable of carrying tens of grams of payload, corresponding to perhaps a dozen to several thousand sensor nodes. Most versions of the aircraft include a color video camera with live video transmission. The plane contains a MEMS gyro to stabilize the roll axis and is easy to fly through the video image. At 60 mph, this aircraft could dispense one Smart Dust-sized sensor every second for 1,000 seconds, covering a square kilometer area with a sensor every 30 meters.
- Cost—As the level of integration increases in MEMS sensor network components, the cost of the sensing, communication, and control will approach the nickel/mm^2 integrated circuit limit. Packaging for these systems will require some minor revolutions to avoid being the limiting factor in cost. Calibration will become dramatically less expensive due to the ability to communicate with the sensor system without having to mount it in a rack and to the increased level of on-board diagnostics and intelligence.

  By 2010, a multi-sensor system with months to decades of life, wireless communication, and sub-cm^3 [detectors] will cost less than a dollar in large volume. Some very specialized systems with limited performance will be manufactured for under 10 cents. (Pister, 2000, p. 34)

D. WEAPON LOCATION SYSTEMS

Counterbattery radar and acoustic systems are used to detect and locate enemy tube artillery, mortars, and rocket launchers.

1. Radar

Figure 9.3-2 shows a counterbattery radar search pattern. "Fire finders transmit narrow pencil-shaped beams that follow terrain like a searchlight. When a weapon fires through the search barrier its line of tracks points to the weapon's ground location" (VanderNaald, 1992).

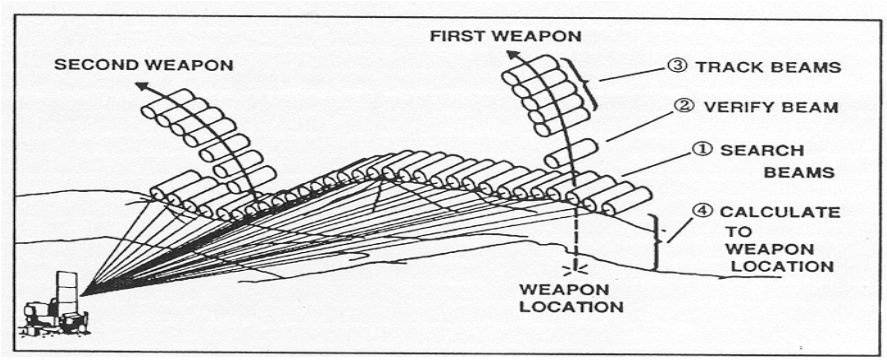

Figure 9.3-2. Firefinder Search Pattern (Source: VanderNaald, 1992)

Today's counterbattery radars include the U.S. Firefinder (TPQ–36, TPQ–37/Block II, and TPQ–47), and the trilateral (France, Germany, and the UK) COBRA (counterbattery radar). In the Gulf War, fast processing of target detections and accurate target locations by the TPQ–36 enabled DPICM (dual-purpose improved conventional munitions) fired by the MLRS to quickly and lethally neutralize Iraqi artillery (VanderNaald, 1992).

The COBRA and the TPQ–47—both more advanced than the TPQ–36—perform the following basic tactical missions:

- Detection, classification and location of hostile mortars, rocket launchers, and artillery batteries;
- Registration and adjustment of friendly firings;
- Determination of jamming data;
- Creation of battlefield intelligence and communication to C3;
- Communication with battle forces; and
- Prediction of shell impact points. (Betz, 1996, p. 12)

COBRA can determine the position of 40 artillery batteries in less than 2 minutes. COBRA and the TPQ–47 can detect rockets and missiles out to 300 km and guns out to 60 km (Pengelley, 1997d; Hewish and Pengelley, 2000).

In peace-support operations, the variety of weapons deployed by warning factions can include anything from small arms to ballistic missiles. "Inventiveness is needed by operators of contemporary radar and acoustic weapons detection systems, most of which were originally designed to locate only artillery and mortar fire positions" (Hewish and Pengelley, 2000).

> The enforced proximity of security forces and the communities they are trying to protect inevitably means optimum stand-off positions for sensors are not always obtainable. Therefore, in the absence of a classical upward-looking detection position behind a crest, the look-down (clutter-rejection) performance of a radar assumes a greater significance. The progressively increasing range capability of modern artillery systems has the effect of extending the distances over which active weapons-detection sensors could themselves be considered vulnerable. Conversely it places a premium on the precision with which a sensor system (whether active or passive) can locate hostile weapons at extended ranges (p. 36).

In some instances, TPQ–36 Firefinders in Bosnia operated from look-down positions rather than behind screening crests. Refined analytic processes enabled the detachments to send patrols to the target point, where they collected weapons from the offenders. Of more than 7,000 acquisitions, none were from indirect fire (Pengelley, 1997d).

Bistatic radar for weapons location is being studied as a future addition to Firefinders. Such radar would reduce false target locations and identify over 100 target locations per minute (Pengelley, 1997d; Hewish and Pengelley, 2000).

In a 1999 demonstration of providing counterfire support for forces deployed ashore, a Navy destroyer used its SPY-1 phased-array radar, which is part of its Aegis combat system, to track 155-mm artillery projectiles and

81-mm mortar rounds fired on an East Coast range. The SPY-1 tracked 18 of 19 projectiles and all 19 mortar rounds. It measured the location of the weapons to an accuracy of 14–16-m CEP (Hewish and Pengelley, 2000).

2. Acoustic

Development of improved cluster microphone technology and processing capabilities has triggered a resurgence of interest in acoustic detection systems. Their advantages over radar are in lower cost, smaller size, and passive operation. Performance varies according to conditions, but a HALO Mk 1 acoustic system used by the British Army in Bosnia achieved a 23-m CEP against a howitzer 30-km distant in mountainous terrain (Hewish and Pengelley, 2000).

E. OTHER GROUND-BASED SENSORS

1. Man-portable Radar

One of the latest generation of radar already in service with the British Army is MSTAR (moving and stationary target acquisition radar). MSTAR is a pulse Doppler scanning radar system that is optimized to detect moving men and vehicles in a typical ground environment.

> The purpose of the radar is to detect and locate targets with high accuracy, to allow classification of targets by their Doppler signature (presented as an audio signal to the operator) and to detect and correct artillery fire onto the detected targets. MSTAR is a low power radar operating from a standard field battery, using a low peak power waveform to minimize hostile detection by electronic surveillance measures (ESM). (Watts et al., 1996, p.!104)

Table 9.3-3 shows some battlefield radar specifications that MSTAR was designed to meet.

To minimize risk of being detected through the interception of emitted radiation by hostile electronic support measure (ESM) systems, a number of design measures were taken to get LPI performance:

> First, the radar peak power can be reduced by employing pulse compression or other coded waveforms which can spread the required pulse energy in time. Second, the likely radar antenna gain in the direction of the ESM can be reduced by the use of low sidelobe antennae. While it is possible that the ESM will intercept the main beam of the radar, the geography of the land battle, coupled with the likely scan pattern of the ESM antenna, make this unlikely. Finally, the effective sensitivity of the ESM can be degraded by forcing the ESM operator to survey a larger "parameter space" than the radar occupies instantaneously. (Watts et al., 1996, p. 106)

Table 9.3-1. Approximate MSTAR Specifications (Source: Watts, 1996)

Detection Ranges	
Man walking	3 km
Moving vehicle	10 km
Fall of shot (artillery)	8 km
Range accuracy	20 m
Bearing accuracy	10 mils
Environment	
Rain	up to 4 mm/hr
Heavy clutter	
Weight	30 kg
Volume	man-portable loads
Power consumption	30 W

2. Emitter Locator Network

Another mini-electronics sensor system designed to aid small ground units consists of networked portable radio-frequency modules controlled by a body-worn user station. Each module weighs 3 kg and has a volume of less than a cubic foot. This Combat Cueing (CBT–Q) system can operate 8 hours off battery power and process data relating to at least 12 threat emitters per minute. The developer, Raytheon, says that CBT–Q has a 95-percent

probability of detecting a radio that communicates longer than 4 seconds, even if it uses LPI techniques (Hewish, 1998c).

F. AIRBORNE SAR

SAR with moving target indication enables high-flying aircraft to quickly survey activity throughout large areas of ground. However, other sensor systems are required to investigate areas of special interest in more detail:

> Where these areas require deep penetration behind enemy lines, this detail may be provided by reconnaissance pods on fast jets or by low observable drones. However, if the area of interest is close to the battlefield, then the necessary information may be obtained from sensors mounted on relatively slow-flying non-stealthy manned helicopters and drones.
>
> Helicopters, although slow and of limited range and endurance by fixed-wing aircraft standards, have the advantage that they can operate from small flat areas well forward, adjust their height and flight path to eliminate terrain masking and deliver imagery directly to the commanders on the ground. They may also be used to define tasks for drones in those areas where the use of manned aircraft is judged to be unacceptably hazardous. (Braybrook, 1999, p. 50)

G. UNMANNED AIR VEHICLES

UAVs now fitted with day, night, and all-weather sensors—electro-optical, infrared, and SAR—can provide continuous imagery via satellite data-link to an element in the chain of command, from tactical operators to the force commander. The sensors can provide precision targeting, reconnaissance, intelligence collection, and battle damage assessment. Real-time targeting information can be directed to an automatically selected weapon (as will be discussed in the following Section 9.4 on Battle Management) or to a ground commander who selects a weapon, which is sent targeting information from the UAV and then fired at the target. The UAV can use a laser designator for a laser seeker head if a unitary warhead is required for penetration or to minimize collateral damage. Otherwise, cluster munitions can be used with targeting data only (Hudson, 2001).

Developments in UAVs have produced remarkable advances in aerial surveillance. An integrated sensor suite (ISS) containing SAR, visible, and MWIR sensors has been installed on the Global Hawk UAV. The Global Hawk can fly at 65,000 ft altitude for up to 38 hours while carrying the full ISS (Bender and Stuart, 1999).

> The ISS can collect radar imagery simultaneously with either visible or MWIR imagery, and output all imagery to tactical users on the ground in real time via an on-board data link. Each sensor can collect strip map imagery at rates of 138,000 sq. km per day, and can collect up to 1900 2 km spotlight images per day. The highest resolution of the SAR is 0.33 m; preliminary NIIRS (National Imagery Interpretability Rating Scale) ratings of the EO and MWIR systems [indicate similar levels of resolution].
>
> One of the novel aspects of the sensors operation is the degree of integration achieved. Both visible MWIR and radar sensors share a single Integrated Sensor Processor for control and imagery management. Sensor imagery is time interleaved and output on a single data link port. Imagery compression techniques are used to dynamically match the output data rate to the link capacity. In addition, the visible and MWIR sensors utilize a unique optical backscan technique to enable the use of tactical staring arrays.
>
> The SAR operates in the X-Band frequency range between 8.5 and 9.0 GHz. The visible sensor collects imagery in the 0.55 to 0.8 micron waveband. The MWIR sensor collects imagery in the 3.6 to 5.0 micron waveband. The SAR provides long-range imagery, day or night, in all weather conditions. The MWIR sensor provides high resolution day or night imagery. The visible sensor provides the highest resolution imagery, but is limited to daytime operation. Imagery may be collected using a Wide Area Search (WAS) mode for maximum ground coverage rate, or a Spot mode for detailed imagery of known target locations. A ground moving target indication (GMTI) radar mode is completing development and in flight test. The ISS outputs imagery and GMTI data in real-time to a ground station via either a direct line-of-sight data link or a [communications satellite] data link. From this ground station, imagery and moving target detections may be disseminated to multiple end users. (Bender and Stuart, 1999, p. 1)

The RQ–1A Predator and the helicopter-like AN–160 Hummingbird are long-endurance, medium-altitude UAVs for RSTA missions. These UAVs could provide "surveillance imagery from synthetic aperture radar, video cameras and a forward looking infra-red (FLIR) can be distributed in real time both to the front line soldier and to the operational commander or worldwide in real time via satellite communication links" (*Army Technology-Predator*, 2001).

Global Hawk and Predator are relatively large UAVs. UAVs come in a wide range of sizes and carry a wide variety of payloads. Figure 9.3-3 compares UAVs in terms of payload weight versus wingspan. Table 9.3-4 contains a list of representative payloads. Small UAVs with model-aircraft-size wingspan can use internal combustion engines or electric propulsion. Advances in battery technology should enable electric propulsion to provide adequate power and energy densities for micro UAVs.

> Small UAVs will continue to be limited to control via ground-to-air links until antenna apertures and equipment power requirements shrink sufficiently to support satellite communications. Local links are particularly important for such vehicles which have the potential for supplying real-time data to units as small as individual squads. The small size of micro vehicles will drive communications to high frequencies (20 GHz and beyond) to keep antenna sizes within the physical dimensions of the vehicles. With the availability of custom MMIC technology the on-board electronics can now be shrunk to the sub-gram level for communications links of about 1–10 km. High frequency systems also permit the ground station to operate with small, man-portable antennas. In fact the entire ground station for a micro UAV could consist of a collapsible tracking antenna of 13–60 cm diameter and a laptop computer for data display and navigation calculations. Air-to-ground links are susceptible to jamming, but spread spectrum and other techniques are available and could be implemented at small cost in weight and power.
>
> Small UAVs provide the important advantage of getting close to the action and providing detailed data on what is going on over the next hill, beyond trees or around buildings in an urban environment. Unfortunately these obstacles are an impediment to practical line-of-sight communications. For these applications vehicles need to either operate autonomously and bring data back for later review, or use an overhead relay to maintain real-time communications. The overhead relay could be another small UAV, but it may have to be larger than the micro vehicles it controls because of the requirement to carry directional antennas to achieve the gain needed for the relay function. (Davis, 1996, p. II-42)

Small UAVs such as the conceptual Organic Air Vehicle (OAV) in the U.S. Army's FCS program "will be capable of carrying modular interchangeable multiple-sensor payloads, including an 'identification friend or foe' system; laser radar (LADAR); collision avoidance sensor; 360-degree field of view camera; and an [IR] camera. Other possible sensors include acoustic arrays, GPS/INS, and NBC detection sensors" (Koch, 2001).

> The OAV will be capable of operating for up to one hour without resupply in day or night as well as adverse weather, and provide communications at ranges up to 10 km. It will be capable of launch directly from FCS vehicles, be able to vertically take off and land, hover and reach cruising speeds of at least 50 kt. The vehicle will have a display unit capable of being incorporated into either existing ground vehicles or FCS platforms and be compatible with the Army Battle Command System. (Koch, 2001, p. 12)

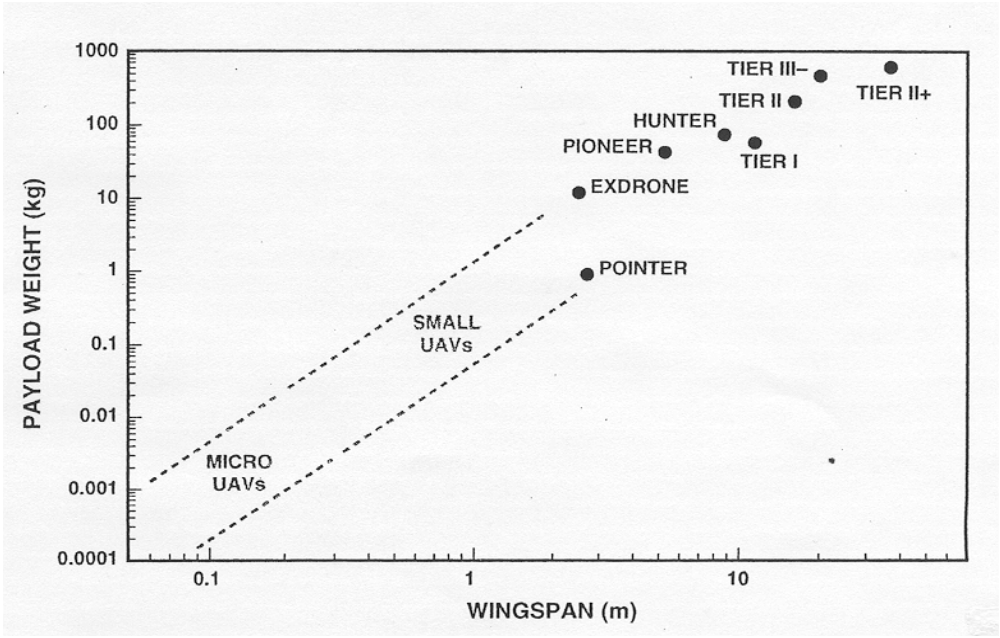

Figure 9.3-3. UAV Payload vs. Wingspan (Source: Davis, 1996)

Table 9.3-2. UAV Payloads

Payload	Approximate Mass, kg
• SAR, moving target indication	15–250
• Visible/IR Imaging—Unstabilized	0.015–10
• Visible/IR Imaging—Stabilized	2–200
• Communications Relay	5–500
• SIGINT	5–500
• NBC Sampling	0.01–1
• NBC Detection	5–15
• Acoustic • Seismic • Magnetic	0.001–1
• Weapons	1–500
Source: Davis, 1996	

In addition to the OAV, which is expected to be a 9- to 27-in. diameter platform (Hewish, 2001b, and Tiboni, 2001c), the Naval Research Laboratory is developing Dragon Eye, a low-cost, expendable, airborne-sensor platform, to demonstrate small-unit reconnaissance and threat-detection capabilities.

> It will consist of a man-portable, multi-role, 4 lb hand-launched air vehicle, featuring autonomous flight capability to allow for one-person operation. Recovery would be via an autopilot-commanded deep stall terminal descent. The endurance goal is 30 minutes at 35 kt airspeed, with an electric motor. Payloads weighing no more than 1 lb include daylight, low-light and infrared imaging systems and a communications link. (Foch, 2000, p. 22)

Human Systems Integration

UAV operations are expected to involve tele-operated or supervised human-machine interactions. Tele-operated UAVs use remotely controlled sensor and actuators, thus allowing human presence to be removed from the work site. Supervised UAVs involve replacement of direct manual control or tele-operated control of system operation with computer-directed functions as though maintaining the human in supervisory control.

There may be a belief that human operators are less important for UAVs than for traditional manned aircraft because most of the functions are automated. But automation replaces humans for easy tasks and frees them to accomplish difficult tasks (such as launch and retrieval of UAVs) most suited to human intellect. Experience with other automated systems indicates that a human operator is required to make automation effective; the flexibility and capability for inductive reasoning of humans warrant incorporating supervisory and intervention capability during UAV operations (United States Air Force Scientific Advisory Board, 1996).

H. SATELLITES

The Discoverer II concept of a large constellation of about 24 low-orbit spacecraft, at an altitude of 770 km, would be expected to make terrain maps, image specific areas of interest, and track moving targets on the ground on a near-continuous basis (Singer, 2000). Discoverer II, whose development was cancelled by the U.S. Congress, would carry an SAR whose imagery would be downlinked to an operational tracker for processing and exploitation. It would also carry a High Range Resolution Ground Moving Target Indicator (HRR–GMTI). The 24-satellite constellation would allow 15-minute revisit time to most areas of Earth. The SAR imagery taken over a period of hours or days of a particular assembly area can be subjected to coherent change detection to show changes in level of activity of forces in that general locale. (Discoverer II, 2001).

The National Reconnaissance Office Director said a Discoverer II system with 24-hour coverage regardless of weather conditions could be deployed within 20 years (Singer, 2000).

LIST OF DCT/S&T TECHNOLOGY DATA SHEETS
9.3. RECONNAISSANCE, SURVEILLANCE, AND TARGET ACQUISITION

Thermal Imaging DCT-9-81
Unattended Ground Sensors DCT-9-81
Unmanned Air Vehicles DCT-9-82
Space-Based Radar DCT-9-83

DCT/S&T DATA SHEET 9.3. THERMAL IMAGING

Critical Technology Parameter	Uncooled arrays with 1,000 × 1,000 or more elements; pixel size of 25 μm; thermal sensitivity < 0.01 °C. Currently pixel size is typically 50 μm. The resultant doubling of target-acquisition range is based on standard seeker focal length of 1, frame rate of 30 Hz, and time constant < 30 m sec.
Critical Materials	Microbolometer and thin-film ferroelectric materials.
Unique Test, Production, Inspection Equipment	None identified.
Unique Software	None identified.
Major Commercial Applications	Perimeter surveillance in physical security applications.
Affordability Issues	Lost cost is an important factor for missile seeker use.

BACKGROUND

Image intensification and thermal imaging are different night-vision technologies that can significantly enhance precision-engagement of targets. The rate of change in thermal-imaging technology is expected to be more rapid than technology based on reflected photons. Improvements in uncooled arrays are expected to produce higher sensitivity, will widen the application spectrum, and will result in uncooled arrays replacing cooled arrays for some applications.

DCT/S&T DATA SHEET 9.3. UNATTENDED GROUND SENSORS

Critical Technology Parameter	Network of large numbers of inexpensive (< $1 in large volume) sub-cubic-centimeter detectors—seismic, optical/electro-optical, and magnetic—that collectively locate and classify or identify potential targets.
Critical Materials	None identified.
Unique Test, Production, Inspection Equipment	Magnetic contamination-control area with field gradient < 0.1 nT/meter.
Unique Software	Algorithms and verified data for real-time magnetic compensation and detection (improvement > 10 to 1). Validated set of algorithms that provides the knowledge base for identifying potential targets, discriminating against false targets, and providing real-time tracking of moving targets.
Major Commercial Applications	Resource exploration and intrusion detection for magnetometers.
Affordability Issues	None identified.

BACKGROUND

Advances in microelectronic technology have greatly expanded the types and volume of data that UGS can provide. High-speed digital signal processors running advanced algorithms permit real-time detection, estimated bearing, identification, and localization of air and ground targets. Adaptive thresholds minimize false alarms caused by background noise and rain.

DCT/S&T DATA SHEET 9.3. UNMANNED AIR VEHICLES

Critical Technology Parameter	A wide range of UAV sizes—wingspans less than 1 m to 10–20 m—variously fitted with day, night, and all-weather sensors—electro-optical, IR, and SAR—will be able to provide continuous ground imagery with high resolution via data link to ground stations, aircraft, or satellites.
Critical Materials	Sensors and data links.
Unique Test, Production, Inspection Equipment	None identified.
Unique Software	Algorithms using human inputs that determine the sensor-to-shooter time gap. Real-time data-compression algorithms capable of better than 200:1 compression. Software implementing intelligent agent functions for autonomous or cooperative operations.
Major Commercial Applications	None identified.
Affordability Issues	None identified.

BACKGROUND

As long as they are survivable, large, high-altitude UAVs provide an important means of supplying quick-reaction area surveillance, communications relay, signals intelligent (SIGINT), or even weapon delivery without the need to ship equipment or operators into the field.

Mid-sized, intermediate-altitude UAVs have an important function for local-area surveillance, atmospheric sampling, and other missions. They will benefit by advances in electronics technology. A major challenge is to limit the logistical overhead of support equipment and ground stations, so the UAVs can reach the field expeditiously and keep up with rapidly maneuvering troops. Survivability is another challenge.

Micro UAVs have a particular advantage for close-in missions where local control and covertness are important. Advanced versions that can hover or deposit themselves at precise locations offer further advantages. They also have the potential for being inexpensive in quantity as a benefit of the microfabrication and MEMS technology that will be required to make them feasible. Technology development is required in several areas, including batteries, combustion engines, flight-control sensors and actuators, and subminiature electronics. The integration of the microvehicle's systems will also be a technology challenge, one that requires new thinking on how to build flight vehicles. These technologies are maturing, and microvehicles will be practical if sufficient development resources are applied.

DCT/S&T DATA SHEET 9.3. SPACE-BASED RADAR*

Critical Technology Parameter	Satellite constellation with 15-minute revisit time to most areas of Earth. SAR imagery will provide high scan resolution, spot resolution in 4 km 4 km target area, and low target location error for movers.
Critical Materials	None identified.
Unique Test, Production, Inspection Equipment	None identified.
Unique Software	Advanced radar algorithms. Algorithms for quick exploitation of downlinked imagery.
Major Commercial Applications	None identified.
Affordability Issues	None identified. If fielded, the accuracy and timeliness of the surveillance product should lead to more effective use of ground-combat systems.

BACKGROUND

Future military operations will need the combination of day, night, and all-weather access; rapid revisit of imagery; and broad area, moving-target surveillance.

* See Section 19.8 for more on Space-Based Radar.

SECTION 9.4—BATTLE MANAGEMENT

Highlights

- Together with advances in accuracy and range of (1) guided munitions (Section 9.2) and (2) sensors on the ground and airborne in UAVs and satellites (Section 9.3), various technology advances in battle management are expected to enable MBTs and other armored fighting vehicles, which have historically been limited to engaging targets within LOS, to engage targets beyond line of sight.
- A global information grid, an information sphere, will provide war fighters with a common battlespace picture developed by remote sensors as well as their own.
- Geographic registration will ensure that target location is the same for sensors and shooters.
- A tactical internet—a robust, mobile, wireless communication network—could be operational within a decade.
- Digital-communication networks using tactical internets, communication satellites, and software-based radios will minimize information latency and provide a basis for network-centric ground combat with centralized or decentralized command and control.
- Network-centric combat provides major advantages over platform-centric combat: more shooters, shorter sensor-to-shooter timelines, and faster and better maneuver decisions.

OVERVIEW

Regardless of size, units are continually faced with three questions, which collectively reflect situation awareness: Where am I? Where are my friends? Where is the enemy? The GPS enables units and even individual platforms to know their locations. Units will know where friends are by such systems as the FBCB2 (Force XX1 Battle Command Brigade-and-Below), the U.S. Army's principal digital command and control system for brigade and below, and the ABCS, a system of systems that will provide situation awareness to echelons from brigade to corps. The FBCB2 relays the situation awareness to the lower command echelons. The ABCS subsystems for battlefield area functions provide information to other systems (see Table 9.4-1).

Table 9.4-1. Army Battle Command System
(Source: United States Army, "Weapon Systems," 1999)

Battlefield Functional Area	Subsystem	Function
Global command and control	GCCS–A	Provides access to the Global Command and Control System.
Maneuver	MCS, FBCB2, EBC	Plans, coordinates, and controls current and future operations. Develops situational awareness and the common tactical picture.
Intelligence	ASAS	Develops and provides pictures of enemy situations, from national, theater, and tactical sources.
Fires	AFATDS	Provides automated support for the planning, coordination, control, and execution of close support and deep fires from Army and Joint assets.
Topographic services	DTSS	Produces tactical topographic products, including digital and full color paper maps of the battlefield
Air Defense	FAADC2	Integrates air defense units, sensors, and command and control centers into a system for defeating low-altitude air threat and enables the commander to plan and control the counter-air fight.
Combat Service Support	CSSCS	An automated system for logical, medical, financial, and personnel support to assist decision-making and the battle planning process.
Weather	IMETS	Provides weather information, based on information from Air Weather Service and other sensors.
Airspace management	A2C2	Provides the capability to plan air movements and track aircraft during movement, and to enable deconfliction with weapons systems planning and operations.

Locating the enemy is covered in Section 9.3, RSTA, which discusses various types of sensors—thermal imagers, radar, emitter locator, and acoustic—and the systems—ground vehicles, UGS, weapon location systems, man-portable, aircraft, UAVs, and satellites—in which they operate. LIDAR and ATR are discussed in Section 9.2.D, which covers accuracy of indirect-fire systems.

A. COMMAND AND CONTROL

As its dual name implies, command and control comprises both a command element that makes decisions and a control element that is involved in an action process. Figure 9.4-1 is a schematic model characterizing a command and control system. Decision-making, the principal objective of a command and control system, depends on an accurate picture of the action process. The situation picture is based on the updated status of the actions; the commands must guide the performance of these actions in real-time. The real-time function may be in terms of seconds or minutes (or hours for noncombat cases). To preserve the real-time function, command and control systems require sophisticated communication networks (Morris, 1983).

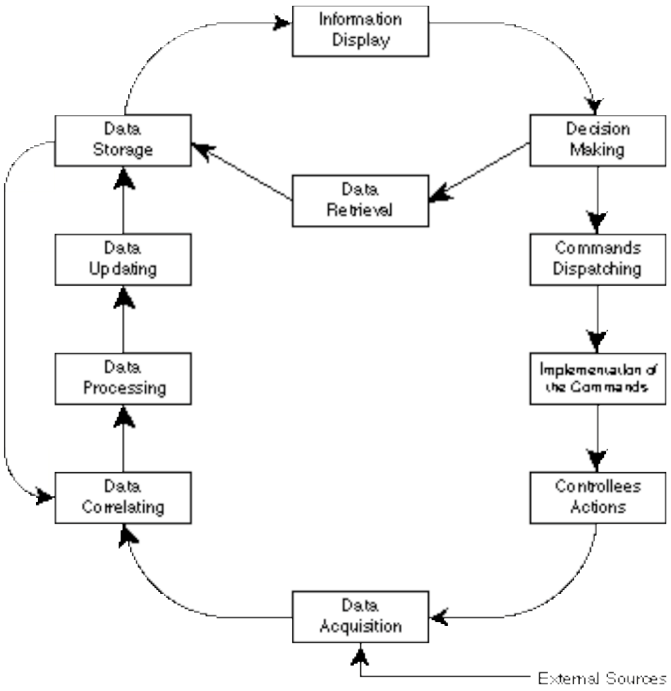

Figure 9.4-1. Basic Operational Blocks of a Command and Control System (Source: Morris, 1983)

1. Centralized and Decentralized Command and Control

A discussion of network-centric warfare (NCW) in a recent issue of *Naval Institute Proceedings* said that in NCW commanders have the ability to operate along a continuum of command methods, from centralized to decentralized:

> Command and control is the method by which commanders synchronize their forces to obtain a military objective. Planning an operation normally is a centralized process. The execution of the plan, however, can be either decentralized (with subordinate forces, armed with their commander's intent and a solid understanding of their role, executing the operation) or centralized (with the commander and his staff issuing specific orders to control the execution of the operation. [The two opposing views of C2 have emerged regarding the best method to implement NCW.] One side argues that the value of NCW lies in the increased knowledge of the battlefield now bestowed on individual war fighters at the tactical level. Thus, decentralized [C2] should give forces an overwhelming advantage by allowing each individual war fighter to act on the information superiority provided by the network. [The opposing view is] that greatly expanded communications capabilities and improved battle space knowledge will lead to more centralized [C2]. (Zimmerman, 2002, p. 9)

In command and control design, the whole system comprises the master system and all the subsystems, such as those in Table 9.4-1. The master command and control system may be organized to operate in a centralized or a decentralized manner.

Reducing timelines of decision-making helps ensure success in planning, deploying weapons and sensors, collecting information, targeting, and assessing strikes:

> As planning and operations timelines differ from higher headquarters down to the individual, it is necessary to tailor information to the user. How well military units handle the speed and content of information transfer will in large part determine their degree of success. In all services and joint operations, finding the timelines of units, weapons, and sensors can be accomplished using the same approach. Information transfer to moving units across the "last mile" of battle is the most taxing problem and it becomes more acute when large numbers of small units must be served by limited communication bandwidth; problems for ground combat units are far more serious owing primarily to the number of elements to be served and wider spans of control. (Howard, 2001, p. 80)

Decision-making timelines will be shortened as:

- Information rates are accelerated at all command levels through new technologies;
- Rapid information transfer improves the ability to react quickly; and
- Short timelines avoid surprise and reduce unit losses and fratricide (Howard, 2001).

B. COMMUNICATIONS

Communication and data transfer are essential for effective command-and-control-system operation. The dominant factors in all system functions are the communications network and the means for using it. The focus for military battle management is communication technology for real-time or near real-time (seconds) automated command-and-control systems.

Forces involved in fast combat operations where quick reactions and personal survival are paramount should not be overloaded with information. "Commanders and staffs should transmit only simple and timely unit status information among echelons" (Howard, 2001). Slower voice and radio data transmissions should be kept separate from each other:

> Data transmissions can convey information to a display much faster than voice transmissions can synchronize human knowledge and coordinate actions based on those displays. Keeping data separate from voice would simplify and focus efforts, and permit voice transmission improvements to proceed independently. Planners could concentrate on the transmittal and display of data and information on the time scales that each echelon requires. Each commander would then know the status of lateral supporting elements and echelons above and below him, as well as the enemy situation. They could function largely on their own initiative, using time-tested command-and-control techniques that have long characterized effective military operations. (Howard, 2001, p. 82)

1. Digitization

Improvements in tactical mobility, in sensor performance, and weapons have created a major increase in the speed of combat operations. The solution to the problems of commanding fast-moving forces is expected to be digital battle-management systems that allow friendly units to share a common operating picture (Richardson, 2001a).

An integrated digital army would use weapon systems with compatible internal digital networks, databases, and data-transfer systems. Digitizing an army involves

- Converting sensor data into digital format if not already digital;
- Digital processing of digital data;
- Interfacing digital control systems and analog outputs;
- Internal networking of digital electronic systems with a vehicle or platform;
- High-resolution digital displays; and
- Digital communications networking among vehicles, aircraft, UAVs, ships or satellites (Evans and Howard, 1994).

In a recent briefing, digitizing the battlefield was described:

> as the application of *information technologies* to acquire, exchange, and employ timely digital information throughout the battlespace, *tailored* to the needs of each decider (commander), shooter, and supporter allowing each to maintain a clear and *accurate vision* of his *battlespace* necessary to support both planning and execution. (Campbell, 1999)

2. Humans and Computers

By taking on repetitive and routine operations, computers free human agents for analytical operations. Computers and other intelligent equipment assist the human agent in evaluating the performance of a process and controlling its action. Table 9.4-2 compares qualifications and limitations of humans and intelligent machines in relevant functions (Morris, 1983).

Table 9.4-2. Qualifications and Limitations of Humans and Computers for Command and Control Functions[a]

Function	Humans	Computers
Ideal missions	Evaluating and analyzing	Routine and repetitive
Central tasks	Supervision and clearing ambiguities	Acquiring enormous amounts of data and converting them to meaningful information
Analyzing situations	Sophisticated	Superficial
Reaction	Intuition	Strictly according to program
Speed of reaction	Relatively slow	Extremely fast
Deterioration with time	Prone to fatigue	No change
Function in the operational loop	Decision making	Controlling process actions and displaying situation picture

[a] Source: Morris, 1983.

3. Global Information Grid

An information grid in NCW is needed to provide a common battlespace picture for all forces. In the not-too-distant future, battle management will be conducted in an information sphere encompassing the whole battlefield area. Within the information sphere is a global information grid of tactical networks tied to all echelons across the battlefield. The battle-management system will have fully networked communications with access to all tactical echelons. Output from all ground-based and airborne (aircraft, UAVs, satellites) sensors will be integrated in a virtual database.

It has historically taken about 15 minutes following target *detection* to retask sensors to provide high-resolution imagery needed for *recognition*. By searching imagery often, with the assistance of cueing from SIGINT or moving target indication, the U.S. Army's Tactical Exploitation System is expected to reduce the retasking time to 5 seconds (Hewish, 2000a).

a. Tactical Maneuver

The following actions lead to maneuver decisions:

- Integrated sensors detect enemy locations;
- Sensor information transmitted to digital command post;
- Sensor information, friendly SA, and possible enemy actions are analyzed to visualize the battlefield; and
- Collaborative planning by video teleconferences and digital whiteboards plus battlefield visualization provides a common picture of real-time shared information. Digitization will enable commanders to make faster and better maneuver decisions (Campbell, 1999).

Their observe-orient-decide-act (OODA) cycle is shorter than their opponents' OODA cycle.

b. Target Engagement

Information on targets is collected by integrated sensors, analyzed, and transmitted to the information sphere. Computer-intensive, automated procedures (without the delays of human interactions) accomplish the following:

- Enter the target into the system;
- Alert fire support;
- Generate a fire mission; and
- Send the mission to weapon(s).

Digitization moves sensor-to-shooter information rapidly (Campbell, 1999). Current sensor-to-shooter time lines of 5 to 10 minutes could be reduced to 5 seconds. "With an integrated wide area picture, dynamic combat with long range weapons is possible since each shooter knows where both friends and enemies are" (Friedman, 2002).

4. Tactical Internet

"For battlefield troops and commanders the utility of new battle management systems or digitization equipments is virtually nil without the availability of an appropriately robust and mobile wireless communications network. In short, what they need is a battlefield equivalent of the internet, which has consequently come to be called the 'tactical internet.'" The expected benefits of digitization are realized in the laboratory where all of the various system elements are hard wired together. However, using a wireless tactical internet in the field, where real communications management, propagation, and interference problems occur, the digitized "system can all too easily fall apart." The U.S. Army is actively confronting the problems of wireless tactical internet and expects to find practical solutions (Pengelley, 2000a).

In the tactical internet, vehicles are equipped with computers that display a common tactical picture, and commanders can see the location of forces in real time. At the lowest level—individual vehicles, squads, platoons, companies, and battalions—the tactical internet is voice and data radios connected to each other. The upper tactical internet will have a high-bandwidth system for video as well as voice and data (Erwin, 2001a).

"The mobility requirement of subscribers at brigade and below makes the maintenance of adequate command and control connectivity and throughput much more difficult than for higher-level headquarters" (Pengelley, 2000a). Communication satellites or UAV communication relays could provide high-data-rate links. Such on-the-move links avoid communications blockages in mountainous terrain. Higher echelons—brigade and above—require communications systems with much longer range; they will likely use a combination of communication satellites (Satcom) and terrestrial systems (Erwin, 2001a).

5. Communication Satellites (Satcoms)

Today's sensors and weaponry require the transmission of increasing amounts of data, as does the need to maintain situational awareness of tactical, highly mobile air, land, and sea forces. The increasing use of expeditionary forces greatly adds to this demand. Forward-deployed troops must be able to transmit and receive large volumes of data, imagery, and video. Military forces are moving to wideband systems to support high-capacity communications required for command and control, intelligence dissemination, exchange of mission data, and target/threat updating (Richardson, 1999b; Hewish, 2001d).

Satcom systems operate in three bands having the following characteristics:

- 0.3 to 3 GHz—the ultrahigh frequency (UHF) band, which is heavily congested and highly susceptible to jamming;
- 3 to 30 GHz—the super-high frequency (SHF) band, which has the wide bandwidth needed for high data rates; its relatively high frequencies provide narrow antenna beams, which in turn make multiple beams and spot practical and provide resistance to jamming; SHF is relatively immune to all but the heaviest weather; and
- 30 to 300 GHz—the extremely high frequency (EHF) band, which provides good anti-jam and anti-scintillation characteristics plus low probability of detection/interception; it is the most survivable and secure band of the three (Richardson, 1999b).

The following glimpse of communications on the move was extracted from a recent journal article:

> The US Army's Communications-Electronics Command (CECOM) anticipates that, over the next five to 10 years, "the current terrestrial network will evolve into a dynamic, multitiered architecture with the addition of unmanned aerial vehicles, other flying platforms and satellite networks. This evolutionary architecture will be characterized by a number of integrated but different communication transmission bands, logically interconnected by some form of packet- or cell-based switching. [These will] provide robust, multimedia, unicast/multicast/"anycast" communication for the nearly continuously OTM

(on-the-move) subscriber network nodes as they move through a dynamic network environment. Any backbone required will similarly be OTM as well." (*Jane's International Defense Review*, 2001. p. 37)

6. Software-based Radios

The U.S. military services are jointly developing a Joint Tactical Radio System (JTRS) that is centered on the communications network (instead of platforms) and is data-centric (instead of voice-centric). The U.S. Army will have a wireless, mobile network of high-capacity tactical radio systems that provide C4I capabilities to the warfighters within line of sight and beyond line of sight (Badolato, 2000).

The following excerpts from the JTRS Operational Requirements Document describe the system, missions, operational concept, and some key features:

- *System*. The radio sets in the JTR sets will be software-reprogrammable, multi-band/multi-mode capable, networkable, and provide simultaneous voice, data, and video communications .

  A family of JTR sets will operate with many legacy waveforms currently used by military and civilian agencies, and incorporate new waveforms as they are developed. The components of the JTRS family of radio sets will be scaleable in terms of form, fit, and cost to meet specific user operational needs. The JTRS will also provide growth capability through an open system architecture that enables technology insertion through evolutionary acquisition or preplanned product improvement (P^3I). The JTRS will be capable of high data throughput rates per channel; incremental channel expansion; high levels of reliability, availability, and maintainability; technological enhancement; and commercial support service compatibility.
- *Mission*. The JTRS ensures Joint operational readiness and success by providing military commanders with the ability to communicate with their forces via voice, video, and data, during all aspects of military operations. The JTRS's networking capability and multiple waveforms (including new waveforms such as the wideband networking waveform) will allow collaboration between commanders and staffs despite geographical and organizational boundaries. In cases where a JTR set replaces the functions of one or more legacy radio(s), the JTR set will perform the same functions and mission(s) supported by the legacy radio(s).
- *Operational Concept*. The JTRS in general terms will be part of the warfighter's toolkit that support DoD's movement toward network centric warfare at the tactical level. The potential increase in Warfighting capabilities through JTRS is tremendous but only if combined with effective employment. Through this combination, the JTRS will be an essential piece in producing the information superiority environment the Warfighter seeks at the tactical level.

  The establishment of robust networks across the battlefield from the tactical to the strategic level is key to future warfare. At the tactical level, the needed mobile ad hoc networks must be able to rapidly form and tie into the higher networks to send/receive the critical information required during operations whether it is in the form of data, voice, or video. Without the dynamic RF networks that are able to move freely across the battlefield and permit the warfighter to tie into the larger static networks, the high paced warfare envisioned by all the services cannot occur. The GIG concept emphasizes the need to tie all these networks together and highlights the importance of the Warfighter receiving mission information anywhere on the battlefield. The JTRS is the essential tactical piece for making these connections whether airborne, ground, or at sea.
- *Flexibility*. Our forces are called upon more and more to rapidly deploy and react to changing missions. For example, a single [joint task force] may be tasked to support humanitarian operations one day and them immediately tasked to conduct a non-combatant evacuation in a hostile environment. This requires a communications system that provides the flexibility that can change its characteristics on the fly. This may include immediate changes in cryptographic keying material or waveforms without requiring major hardware reconfigurations. It may also require establishing additional mobile ad hoc networks that are able to tie into dissimilar networks that carry needed information for the new mission.
- *Connectivity*. The sensor to shooter concept for the future battlefield places a premium on end-to-end connectivity from the node sensing/observing a target to the node that brings to bear ordnance/ reconnaissance on that target. In the past, these nodes most likely worked with different radio systems and most often on different frequency spectrums. While these nodes may continue to work on different

frequency spectrums due to environmental factors, our future warfighting concepts require that the sensing/observing node be able to pass target data directly to the ordnance/reconnaissance node in a way that is transparent to the warfighter.

- *Equipment*. The employment of smaller, more mobile forces, especially in the ground domain, demands a reduction in equipment where possible. Currently, the warfighter is forced to carry multiple single channel radios in order to participate simultaneously in multiple voice/data nets. This decreases mobility and flexibility of a small unit. Therefore, the warfighter must be able to send/receive data and participate in multiple nets using a single terminal in this case JTRS. Also, because most warfighters at the tactical level are disadvantaged users, a premium is placed on bandwidth, requiring maximum use of all available bandwidth and channels. This demands that a node or network is able to sense the traffic load and automatically adjust channel and bandwidth to meet mission requirements.
- *Operating Areas*. Much larger operating areas containing widely dispersed forces are envisioned in future warfare from hundreds of square kilometers for ground forces to thousands of square miles for the air forces. This, coupled with the dynamic movement and reallocation of forces at the tactical level, requires self-organizing, self-healing networks. The JTRS must be able to hold together these networks as nodes move at the highest speeds and rapidly enter and exit the networks (e.g. aircraft) perhaps at great distances. Also, because of these anticipated large operating areas, airborne nodes are considered key to extending networks and maintaining network integrity.
- *Voice vs. Data*. While future operations will still require point-to-point voice communications, the transfer of digital data and imagery—especially for information that feeds into a common tactical picture—is overtaking voice as the principal media to communicate mission requirements. This is because fast paced operations require equally fast information inputs that pre-formatted preplanned messaging can provide. Therefore, JTRS must be flexible enough to provide point-to-point and netted voice and data, whether it is between/among Marine Corps COCs, Army TOCs, Shipboard Command Centers Air Force AOCs, Joint Operations Centers or other functional centers (e.g., intelligence, logistics, etc.).
- *Common Operational Picture/Common Tactical Picture (COP/CTP)*. As mentioned, future warfare dependency on information is increasing. A portion of this information deemed critical on the fluid battlefield is an accurate common tactical picture or operational picture. One means of ensuring accuracy is transmitting CTP/COP updates simultaneously to all the applicable warfighters so that a commander can reasonably expect all those within the command see the same picture. This requires the means to broadcast or multicast the required information while maximizing use of the available bandwidth.
- *Stealth on the Battlefield*. Low observable/stealth platforms are an important element of future battles. This characteristic is at odds with a need to send/receive mission information—an action that can potentially expose a platform. Therefore, JTRS must provide a passive means to participate in networks without degrading these platforms' low observable/stealth characteristics. (Joint Tactical Radio System, 2001, pp. 1–6)

C. THREAT ENVIRONMENT

The digitized battle-management system will operate in the same environment as current systems. "Potential opponents range from nations with modern conventional military forces, organized terrorists and insurgent organizations to small bands of individuals armed with any weapon available." The primary threat in the radio frequency operating domain is two forms of information warfare (IW): signal transmission and information content. Signal transmission includes electronic warfare (EW) threats of signal detection, interception, and exploitation, direction finding, and jamming. Information-content threats are virus infections, hacking, and morphing.

"These IW threats will likely become more sophisticated in the post-2000 time frame, as IW systems are able to attack spread spectrum and frequency hopping systems as well as non-RF information transfer systems" (Joint Tactical Radio System, 2001).

LIST OF DCT/S&T TECHNOLOGY DATA SHEETS
9.4. BATTLE MANAGEMENT

Digitization DCT-9-95
Global Information Grid DCT-9-96
Tactical Internet DCT-9-97
Software-Based Radios DCT-9-98
Communication Satellites (Satcoms) DCT-9-99

DCT/S&T DATA SHEET 9.4. DIGITIZATION

Critical Technology Parameter	Reducing time lines for tactical decision-making from several minutes to a few seconds in a fast-moving force requires digitizing its communications: (1) converting sensor data to digital forms; (2) processing digital data; (3) interfacing digital control systems and analog outputs; (4) networking digital electronic systems within every vehicle/platform; (5) using high-resolution digital displays; and (6) using digital communications networks among ground, air, space, and sea platforms.
Critical Materials	None identified.
Unique Test, Production, Inspection Equipment	None identified.
Unique Software	Algorithms for ensuring that all weapon systems and combat support systems are compatible with digital networks, databases, and data-transfer systems.
Major Commercial Applications	Any command and control system that convey large amounts of data, formatted messages, and video directly to numerous destinations at high speeds and within a given time line.
Affordability Issues	None identified. If fielded, digital communication will lead to more effective and efficient use of ground-combat and combat-support systems.

BACKGROUND

Improvements in tactical mobility, sensors, and weapons have created a major increase in the speed of combat operations. The solution to the problem of commanding fast-moving forces is expected to be digital battle-management system.

DCT/S&T DATA SHEET 9.4. GLOBAL INFORMATION GRID

Critical Technology Parameter	The global information grid is an information grid in NWC that provides a common battlespace picture for all forces. The global information grid comprises tactical networks at all echelons and all platforms across and above the battlefield. The global information grid contains a virtual database of integrated outputs from all ground-based and airborne (aircraft, UAVs, satellites) sensors. With cueing assistance following target *detection*, retasking sensors to provide higher resolution imagery needed for *recognition* is expected to be reduced from several minutes to a few seconds.
Critical Materials	Cueing from SIGINT or moving target indication.
Unique Test, Production, Inspection Equipment	None identified.
Unique Software	Algorithms that provide central command and control system with priority sensor coverage, situation awareness, automatic engagement reports (when sensor-shooter conditions meet established rules), fuel and ammunition status of friendly vehicles.
Major Commercial Applications	None identified.
Affordability Issues	None identified.

BACKGROUND

In the not-too-distant future, battle management will be conducted in an information sphere encompassing the whole battlefield area. The battle-management system will have fully networked communications with access to all tactical echelons. Output from all ground-based and airborne (aircraft, UAVs, satellites) sensors will be integrated in a virtual database.

DCT/S&T DATA SHEET 9.4. TACTICAL INTERNET

Critical Technology Parameter	The battlefield internet is expected to provide a robust wireless communication network for high-speed combat. It will have voice and data radios connected to each other at the lower tactical levels—individual vehicles, squads, platoons, companies and battalions—and a high-bandwidth system for video as well as voice and data for brigade and above.
Critical Materials	None identified.
Unique Test, Production, Inspection Equipment	None identified.
Unique Software	None identified.
Major Commercial Applications	In this case, the military is adopting a commercial technology.
Affordability Issues	None identified. The tactical internet will lead to more effective and efficient use of combat and combat support systems.

BACKGROUND

Modern ground forces are increasingly mobile and less dependent on hard wiring for battlefield communications. Commercially available information technologies—streaming video, high-resolution graphics, overhead imagery, and Web-based logistics—can be useful for battle-management systems.

DCT/S&T DATA SHEET 9.4. SOFTWARE-BASED RADIOS

Critical Technology Parameter	The United States is developing a JTRS whose radio sets will be software-reprogrammable, multiband/multimode capable, and networkable and will provide simultaneous voice, data, and video communications. The radio sets will operate with many legacy waveforms currently in use and new waveforms as they are developed.
Critical Materials	Field Programmable Gate Arrays (FPGAs), Analog-to-Digital Converters (A/Ds), Digital Signal Processors (DSPs).
Unique Test, Production, Inspection Equipment	None identified.
Unique Software	None identified.
Major Commercial Applications	None identified.
Affordability Issues	The JTRS would consolidate about 30 different types of radios to a single standard. Eventually 200,000 JTRS radios would replace 950,000 radios that the DoD has today. The JTRS is expected to minimize total life-cycle tactical radio system costs to DoD. This will result from the consolidation of the functionality of numerous radios into a single radio system, hardware reuse through a common architecture and software upgrades, consolidation of service requirements into single-domain buys, and a consolidation of radio system operator and maintenance training and logistics support.

BACKGROUND

The JTRS will take advantage of rapid changes in commercial technology to provide the functionality and flexibility necessary to achieve and maintain information superiority or to support the rapid mobility required by today's armed forces. Therefore, a software-programmable and hardware-configurable digital radio system is required to provide increased interoperability, flexibility, and adaptability to support the varied mission requirements of the war fighters. The JTRS lays the foundation for achieving network connectivity across the radio frequency spectrum and provides the means for digital information exchanges, both vertically and horizontally, between Joint warfighting elements, while enabling connectivity to civil and national authorities.

DCT/S&T DATA SHEET 9.4. COMMUNICATION SATELLITES (SATCOMS)

Critical Technology Parameter	Satcoms provide high-data-rate links that avoid communications blockage by mountains and operate at longer range than terrestrial systems. Most likely Satcom systems will operate in the EHF (30–300 GHz) band, which provides good antijam and antiscintillation characteristics plus low probability of detection/interception.
Critical Materials	None identified.
Unique Test, Production, Inspection Equipment	None identified.
Unique Software	Algorithms that logically connect UAVs, other flying platforms, and satellite networks to provide robust multimedia communications for nearly continuously moving subscriber modes.
Major Commercial Applications	Commercial communications.
Affordability Issues	None identified. Satcoms lead to more effective and efficient use of combat and combat support systems.

BACKGROUND

Military forces are moving to wideband systems to support high-capacity communications required for command and control, intelligence dissemination, exchange of mission data, and target/threat updating.

DCT/S&T SECTION 9—REFERENCES

Army Technology-Predator-UAV, 2001, Online, Available: http://www.army-technology/projects/predator, 24 September.

Atkin, Keith, editor, 2001, *Jane's Electro-optic Systems,* Seventh edition, 2001–2002.

Atkinson, Henry R., 2000, "Modern Camouflage Technologies and Signature Management," *Military Technology,* September.

Badolato, Anthony G. Jr., Colonel, 2000, "Joint Tactical Radio System," *American Institute of Engineers Communications 21 Conference,* Washington, D.C., 10–11 April.

Bender, Paul A., and Donald M. Stuart, 1999, "The Global Hawk Integrated Sensor Suite (ISS)," an abstract of a paper presented at the inaugural meeting of the National Military Sensing Symposium (MSS), 16–18 November.

Betz, Helmut, 1996, "COBRA: counter battery radar," *Defense Systems International*.

Bianchi, Fulvio, 1999, "Scout/Recce Vehicles: Towards a New Generation," *Military Technology,* July.

Biass, Eric H., 1999, "Taking the T-72 into the 21st Century," *Armada International,* January.

Biass, Eric H., and Doug Richardson, 1997, "Fighting Vehicles Today, Tomorrow and the Day After," *Armada International,* June.

Biass, Eric H., et al., 1998, "The Tank Killers," *Armada International,* June.

Biass, Eric, and Tim Ripley, 1999, "The God of War in the Next Millennium," *Armada International,* April.

Bilker, Mirjam, 2001 "GPS/INS Integration for Direct Georeferencing of Aerial Imagery," Online, Available: http://foto.hut.fi/Kkk/Kkpaivat/Kkp99/bilker1. html, 30 June.

Braybrook, 1998, "Dumb Bombs Get Smart," *Armada International,* May.

———, 1999, "Taking a Closer Look," *Armada International,* March.

———, 2000, "Met-beating Ground Attack Weapons," *Armada International,* April.

Burley, 2000a, "Armored Vehicles for a New Century," *Armada International,* March.

———, 2000b, "The Battlefield Taxi," *Armada International,* May.

Bustin, 1995a, "Mortars—Hitting the Spot in the 1990s," *Military Technology,* April.

———, 1995b, "Vetronics—Waiting the Right Bus," *Military Technology,* March.

Campbell, William H., Lieutenant General, 1999, "Digitizing the Army," briefing at the Institute for Defense Analyses, 22 September.

Carroll, Dominic, 1996, "Uparmoring with appliqué systems," *Defense Systems International*.

Courtney-Green, P.R., 1991, *Ammunition for the Land Battle,* Brassey's (UK) Ltd.

Davis, William R., 1996, "UAV Options," *Tactics and Technology for 21st Century Military Superiority,* Vol. 3, Technology White Papers, Defense Science Board 1996 Summer Study Task Force, October.

Defense Science Board Task Force, 1998, "Satellite Reconnaissance," Online, Available: http://www.fas.org/spp/military/imint/dsb-980100.htm, January.

Discoverer II, 2001, Online, Available: http://www.fas.org/spp/military/program/imint/starlight.htm. 6 November.

Erwin, Sandra L., 2001a, "Army's Future Tactical Net Apt for High-Speed Combat," *National Defense,* October.

———, 2001b, "Novel Fighting Vehicles Fuel Demand for Modern Munitions," *National Defense,* April.

European Automotive Design, 2001, "Variable fluids smooth ride and steering," Online, Available: http://www.shelleys.demon.co.uk/ead2p24.htm, 5 March.

Evans, Dennis K., and William E. Howard III, 1994, "Technology for the Digital Battlefield," *Army Research, Development and Acquisition Bulletin*, July-August.

Evans, Nigel, 1995, "Artillery Indirect Fire and Its Weapons," *Military Technology,* October.

FAS, http://www.fas.org/irp/imint/hyper.htm, Online, Available, 11 October 2002

Fitts, Joseph, 2000, quoted by Scott Calhoun in *"Human Factors in Ship Design,"* Online, Available: www.manning.affordability.com, 1 May.

Fletcher, Robin, 1992, "The case for the half section infantry combat vehicle," *Defense Systems International.*

———, 1994, "Crew-in-Hull Concepts," *Military Technology,* October.

Foch, Richard, 2000, "Eye on Dragon Eye," *Unmanned Systems,* Vol. 18, No.5, September/October.

Foss, Christopher F., 2001a, "52-caliber enhancement for M109s," *Jane's International Defense Review,* January.

———, 2001b, "Making the Tough Tougher." *Jane's Defense Weekly,* 6 June.

———, ed., 2000–2001, *Jane's Armour and Artillery,* 21st edition.

———, ed., 2001–2002, *Jane's Armor and Artillery Upgrades,* 14th edition.

Freedman, David H., 2001, "The Light Brigade," *Technology Review,* Vol. 104, No. 6, Massachusetts Institute of Technology, July/August.

French, Mark A., 2000, "Composite Materials for AFVs," *Military Technology,* August.

Friedman, Norman, 2002, "Are We Already Transformed?," *Proceedings,* U.S. Naval Institute, January.

FY 2000 Joint Robotics Program Master Plan, Office of the Secretary of Defense Joint Robotics Program Office.

Gander, Terry J., 2000a, "The Crafts of Confusion," *Armada International,* February.

———, 2000b, "Fuzes: Perfection to be Destroyed," *Armada International,* January.

———, 2000c, "Homing Alone—the Autonomous Projectile," *Armada International,* January.

———, 2001, "Locate and Strike—Aiming the Guns," *Armada International,* January.

Gauger, Dan, 1995, "Active Noise Cancellation for Aircraft and Vehicles," *Military Technology,* May.

Geuckler, Andreas, 1995, "The T-80U Main Battle Tank," *Military Technology,* April.

Goodman, Glenn W. Jr., 2000, "Wireless Tactical Internet," *Armed Forces Journal International,* February.

Gourley, Scott R., 1999, "Veteran Bradley bridges the digital gap," *Jane's International Defense Review,* February.

———, 2001, "M109—modernizing for the millennium," *Jane's International Defense Review,* March.

Grosch, Hermann, 1999, "All Electric Combat Vehicle (AECV)—Vision and Reality," *Military Technology,* September.

Hanel, Dieter, 1999, "The AFV Industry in the USA," *Military Technology,* October.

Hewish, Mark, 1996, "At the sword's point, specialized equipment for early-entry forces," *Jane's International Defense Review,* November.

———, 1998a, "Little Brother Is Watching You," Online, Available: http://online.janes.com/janesdata/mags/idr/, 10 September.

———, 1998b, "Mini electronics smarten up small units," *Jane's International Defense Review,* August.

———, 1998c, "Silent sentinels lie in wait: unattended ground sensor," *Jane's International Defense Review,* January.

———, 2000a, "Cost cut for eyes in space," *Jane's International Defense Review,* December.

———, 2000b, "Smart and smarter," *Jane's International Defense Review,* January.

———, 2001a, "GI, robot," *Jane's International Defense Review*, January.

———, 2001b, "Organic air vehicle to support Future Combat System in U.S. Army," *Jane's International Defense Review,* March.

———, 2001c, "Smaller, lighter, cheaper," *Jane's International Defense Review,* May.

———, 2001d, "Switchboards in the sky," *Jane's International Defense Review,* July.

———, 2001e, "U.S. sees central role for NetFires fire-support system," *Jane's International Defense Review,* January.

Hewish, Mark, and Joris Janssen Lok, 1998, "The flat world of rugged displays," *Jane's International Defense* Review, July.

Hewish, Mark, and Leland Ness, 1996, "Shoot first, ask questions later," *Jane's International Defense Review,* March.

Hewish, Mark, and Rupert Pengelley, 1996, "Pinpoint punch," *Jane's International Defense Review,* March.

———, 1997, "Achieving battlefield awareness," *Jane's International Defense Review,* May.

———, 1998, "Sensors provide eyes and ears for battlefield recce vehicles," *Jane's International Defense Review,* August.

———, 1999, "Massing mortars to full effect," *Jane's International Defense Review,* August.

———, 2000, "Pinpointing the battlefield threat," *Jane's International Defense Review,* March.

Hilmes, Rolf, 1994, "AFVs and Thermal Imagers," *Military Technology,* October.

———, 1999, "Aspects of Future MBT Conception," *Military Technology,* June.

Hopkins, John W., et al., 2000, *Warrior Extended Battlespace Sensors (WEBS),* a report on the CECOM-NVESD/ARL WEBS program, 23 June.

Howard, William E. III, 2001, "Reduce Decision-Making Timelines," *Naval Institute Proceedings,* July.

Hudson, Walter, Commander, 2001, "SAM Threat Over Iraq," *Naval Institute Proceedings,* October.

Irgens, Manfred, 2000, "Competence in all Electric Drive and Stabilization Systems for Tanks," *Military Technology,* June.

Jane's International Defense Review, 2001, "Communications on the Move," July.

Joint Tactical Radio System (*JTRS*), 2001, Operational Requirement Document, Revision #2, 1 October.

Keller, John, 1997, "Vetronics designers struggle to fill the gaps where open systems fall short," *Military and Aerospace Electronics,* October.

Klotz, Martin, 2000, "An Outstanding MBT," *Military Technology,* September.

Koch, Andrew, 2001, "U.S. Army, DARPA start to develop small VTUAV," *Jane's Defense Weekly,* 17 January.

Lee, R.G., 1981, *Introduction to Battlefield Weapons Systems and Technology,"* Brassey's Publishers Limited.

Lett, Philip W., 1996a, "Abrams soldiers on in place of future tank," *Jane's International Defense Review,* September.

———, 1996b, "Armor demands greater power," *Jane's International Defense Review,* March.

Makarovets, Nikolai A., 1995, "Artillery Rocket Systems—And More," *Military Technology,* April.

Manson, M.P., 1997, *Guns, Mortars and Rockets,* Vol. 3 of *Brassey's New Battlefield Weapons Systems and Technology Series into the 21st Century.*

Military Technology, 1997, "Active Tank Protection: the Russian Approach," February.

Morris, D.J., *Communication for Command and Control Systems*, Pergamon Press, 1983.

Moss, G.M., et al., 1995, *Military Ballistics,* revised edition, *Brassey's Land Warfare into the 21st Century,* Brassey's Ltd.

Mydlarz, Jerzy, 1999, "Modernisation of the T-72's Propulsion System," *Military Technology,* August.

Nilsson, Anders, and Lars Falk, 1996, "AFV Survival—Ballistic Protection and Signature Management," *Military Technology,* July.

Ogorkiewicz, R.M., 1991, *Technology of Tanks,* Jane's Information Group Limited, UK.

———., 1996, "Ceramics Enhance Armor Survivability," *Jane's International Defense Review,* September.

———, 1997a, "Future tank armors revealed," *Jane's International Defense Review,* May.

———, 1997b, "Infantry armored vehicle design continues to vary," *Jane's International Defense Review,* August.

———, 1997c, "Transforming the tank," *Jane's International Defense Review,* October.

———, 1999a, "Electric drives take new forms," *Jane's International Defense Review,* January.

———., 1999b, "In search of lighter, smaller electric guns for future tanks," *Jane's International Defense Review*, February.

———, 1999c, "Weighing up the infantry's armored vehicle options," *Jane's International Defense Review,* March.

———, 2000a, "Israel advances with fourth-generation MBT armor and heavily protected fighting vehicles," *Jane's International Defense Review,* May.

———, 2000b, "Worldwide wheeled armored vehicle programs raise questions over mobility," *Jane's International Defense Review,* January.

Ogorkiewicz, R.M., and Mark Hewish, 1999, "Active protection: providing a smarter shield for AFVs," *Jane's International Defense Review,* July.

Pengelley, Rupert, 1996a, "Reconnaissance vehicles look out for solutions," *Jane's International Defense Review,* September.

———, 1996b, "Towed artillery designers wage weight wars," *Jane's International, Defense Review,* October.

———, 1997a, "Counter-battery systems," *Jane's International Defense Review,* July.

———, 1997b, "Fuzes adapt to new force deployments," *Jane's International Defense Review,* February.

———, 1997c, "Mortars aim for more capability," *Jane's International Defense Review,* January.

———, 1997d, "Technology boosts long-range multiple rocketry," *Jane's International Defense Review,* December.

———, 1998a, "Shaping up the recce platform," *Jane's International Defense Review,* October.

———, 1998b, "Towed artillery advances," *Jane's International Defense Review,* April.

———, 2000a, "Battling with tactical internets," *Jane's International Defense Review,* February.

———, 2000b, "Close fire munitions shoot ahead," *Jane's International, Defense Review,* August.

———, 2000c, "Germans set their sights on Future Combat Systems armament," *Jane's International Defense Review,* December.

———, 2000d, "US unveils hybrid electric APC," *Jane's International Defense Review,* December.

———, 2001a, "Braveheart—52-caliber 155 mm, for real," *Jane's International Defense Review,* July.

———, 2001b, "Fuzes seeking more power," *Jane's International Defense Review,* May.

———, 2001c, "GCT firepower revival for the French Army of the 21st Century," *Jane's International Defense Review,* January.

———, 2001d, "PzH 2000 now aiming for export markets," *Jane's International Defense Review,* May.

Pengelley, Rupert, and Mark Hewish, 2000, "MBT faces up to narrow horizons," *Jane's International Defense Review,* April.

———, 2001, "In the heat of the night," *Jane's International Defense Review,* October.

Pister, Kristofer S.J., 2000, "Military Applications of Sensor Networks," Paper 2, Vol. 1 of Institute for Defense Analyses Paper P-3531, *Defense Science Study Group 1998–1999,* February.

Plaster. Ronald L., and Lana Wos, 2001, "A LIDAR Primer," *Elevation,* a supplemen*t* to *Geospatial Solutions* and *GPS World,* September.

Po, Enrico, 2000, "Lightweight and High Firepower," *Military Technology,* July.

Raffa, Charles J., 2000, *FCS Propulsion Technology, Next Generation Technology for Future Combat Systems*, Tank-Automotive and Armaments Command briefing report, 25 October.

Richardson, Doug, 1998a, "GPS in the Shadows of Navwar," *Armada International,* April.

———, 1999a, "Casting Light on Target," *Armada International,* March.

———, 1998b, "Seeing Electronically? Recognizing is Better!," *Armada International,* March.

———, 1998c, "Steel Alone is no Longer Enough on Tanks," *Armada International,* March.

———, 1999b, "Military Satcoms Poised for Expansion," *Armada International,* January.

———, 2001a, "Armies Pursue the Digital Dream," *Armada International,* February.

———, 2001b, "Vetronics for Fighting Vehicles," *Armada International,* January.

Schwartz, R.E., et al., "*Value of Organic Unmanned Vehicles to Light Infantry Battalions,"* Institute for Defense Analyses paper P-3024, October 1994.

Scott, William B., 1999, "Bad Weather No Deterrent For New Long-Range Weapons," *Aviation Week and Space Technology,* 3 May.

Sellschopp, Friedhart, 2000, "The LEOPARD 2 System in the 21st Century," *Military Technology,* September.

Sheriff, John D., 1992, "Monitoring and managing tactical situations on the battlefield," *Defense Systems International*.

Signal, 2001, "All-Optical Communications Command Missile Flight," May.

Singer, Jeremy, 2000, "NRO Will Lobby Congress for Discoverer 2," *Defense News,* 14 February.

Sklar, Jay R., 1996, "GPS Capability Projections," *Tactics and Technology for 21st Century Military Superiority,* Vol. 3, Technology White Papers, Defense Science Board 1996 Summer Study Task Force, October.

Taylor, Jeremy, 1994/1995, "Armored reconnaissance—mix or match?," *Defense Systems International*.

Tiboni, Frank, 2001a, "Tracks Have Brighter Future in British, U.S. Vehicles," *Defense News,* 19 March.

———, 2001b, "U.S. Army Accelerates Future Combat System," *Defense News,* 11-24 June.

———, 2001c, "U.S. Army Has High Hopes for Satellite Terminal," *Defense News,* 18-24 June.

Tiedemann, Uwe, 1993, "Towards the All-Electric Tank," *Military Technology,* October.

United States Air Force Scientific Advisory Board, 1996, *Report on UAV Technologies and Combat Operations,* Volume 1, Summary, November.

United States Army, 1999, "Weapons Systems," available at the U.S. Government Printing Office.

VanderNaald, James, 1992, "Desert Storm artillery report: triumph for weapon locating radar," *Defense Systems International*.

Vickers Defense Systems, 1996, "Tanks: systems integration is the way ahead," *Defense Systems International*.

Walker, Clive, editor, 2001, *Jane's C4I Systems,* 13th edition, 2001–2002.

Watts, S., et al., 1996, "Battlefield surveillance," *Defense Systems International*.

Williams, David, 1993, "Combat Reconnaissance," *Defense Systems International*.

———, 1996, "Armor and force projection," *Defense Systems International*.

Willis, G.E., 1998, "Advances Will Expand Role, Power of Artillery, *Defense News,* 16–22 February.

Witt, Mike, 2000, "Precision Impact—the Ultimate Solution?," *Armada International,* April.

Zimmerman, John D., 2002, "Net-Centric Is about Choices," *Proceedings,* U.S. Naval Institute, January