SBIR N03-T015
Supplemental Information

OBJECTIVE: The objective of this document is to provide to responders supplemental technical information sufficient to make a conceptual design.

N03-T015 TITLE: LCAC Cargo Restraint Griping System

TECHNOLOGY AREAS: Ground/Sea Vehicles

ACQUISITION PROGRAM: FNC Littoral Combat and Power Projection

OBJECTIVE: The objective of the project is develop a quick-release cargo restraint system for the Landing Craft Air Cushion (LCAC). The system should reduce the time required to secure and release cargo on the LCAC without incurring a weight penalty over the existing lashing system.

DESCRIPTION: The LCAC is a high speed air cushion vehicle utilized for the transport of troops and materiel at speeds in excess of 30 knots from the seabase to the shore. The LCAC is capable of transporting loads up to 75 tons from over the horizon through the surf-zone and across the beach to a craft landing zone. The craft operates in a harsh marine environment including salt water spray, blown sand and debris, and temperature extremes from -40 to 110 degrees Fahrenheit. The LCAC operational seastate envelope includes full mission capability through sea state three, limited capability in sea state four, and survival in sea state five.

The Landing Craft Air Cushion (LCAC) currently uses conventional chain and adjustable length wire rope cargo restraint with an over center cam type latching mechanism to secure rolling stock vehicles and palletized cargo to the craft’s open cargo deck. The existing restraints have a breaking strength that is greater than 35,000 lbs, but less than 40,000 lbs to prevent damage to the LCAC cargo deck structure. Underway dynamic forces require that all cargo be restrained to withstand a 1.5 G acceleration in the forward and vertical direction, and 1.0 g for lateral and aft direction for peacetime/training conditions. The forward G acceleration is reduced to 1.0 G, and the

vertical, lateral and aft requirements are reduced to .5gs under situations when the LCAC can be exposed to hostile fire, accepting a somewhat higher degree of risk of cargo breaking free in order to reduce the number of cargo restraints that must be removed thereby reducing the craft exposure to hostile fire.

Due to the weight of some of the cargo carried by LCAC, a large number of gripes must be used. For example, the M1A1 tank requires 20 cargo restraints for securing the tank to the craft during peacetime/training transit. Craft cycle time is adversely impacted due to the considerable amount of time required for personnel to install and remove each lashing, typically 20 minutes to install and 5-7 minutes to remove. The increased cycle time reduces rate of cargo throughput in an amphibious operation, taking a longer time to build up forces ashore. Furthermore, excessive time is required for discharging cargo on the beach, even with the reduced number allowed in a wartime situation. This is very detrimental during wartime as the longer it takes to offload cargo, the longer the LCAC and crew may be exposed to hostile fire. Doctrinally, the LCAC is supposed to transport cargo to a secured or benign beach. However, the potential of hostile fire in a threat environment cannot be eliminated entirely. The threat is so serious that during operation Desert Storm the LCAC crews considered transporting vehicles without any cargo restraints in order to be able to offload on the beach as quickly as possible. This could have had severe consequences should the cargo have shifted underway. The craft could have been severely damaged, or at least rendered inoperable and non-mission capable due to the off-balanced load.

A quick-release cargo restraint system would drastically reduce the LCAC cycle time and cargo offload time on the beach under hostile fire. The risk to the LCAC and crew would be greatly reduced and cargo throughput increased, allowing a more rapid buildup of force ashore.

A wide variety of alternatives have potential in the development of a quick-release gripe system. Recently developed commercial technologies such as active materials and smart materials could be utilized. Older technologies such as explosive release mechanisms and more basic mechanical quick-release mechanisms might also have potential. The Navy will only consider proposals that are innovative, address R&D and involve technical risk.

PHASE I: Develop concepts and select or develop materials that will provide an improved quick release lashing system for the LCAC and meet defined performance requirements. Perform a tradeoff study to evaluate the merits of the design concepts and if possible build bench scale prototypes of concepts.

PHASE II: Develop the strongest concepts into prototype systems and perform some level of testing and evaluation on these systems in actual or simulated environments.

PHASE III: Test prototype systems onboard an LCAC to secure cargo under simulated operational conditions. Perform underway testing with instrumentation as required to demonstrate system capability and characterize the potential reduction in craft cycle times. Develop a transition plan for the implementation of this technology into the Naval Fleet.

COMMERCIAL POTENTIAL: The technology developed under this program shall be applicable to commercial shipping, commercial trucking, and aircraft cargo securing practices.

REFERENCES:

1. http://www.intellimat.com/materials

2. http://www.chinfo.navy.mil/navpalib/factfile/ships/ship-lcac.html

3. FutureNaval Capabilities Website http://www.onr.navy.mil/fncs/

KEYWORDS: Cargo securing, gripes, cargo lashing, tie-down, cargo gripes, cargo restraint system

TPOC: John Ducote
Phone: 850-235-5388
Fax: 850-235-5366
Email: ducoteje@ncsc.navy.mil
2nd TPOC: Nam Trinh
Phone: 850-234-4546
Fax: 850-235-5366

Email: trinhnk@ncsc.navy.mil

Questions and Answers received from responders:

Question: To release tiedown chains, I assume that we need to reduce the tension load first to loose the chain, then, disconnect both ends (vehicle and cargo deck). So which step is the most time-consuming processing? In other words, we need to design a quick-release mechanism? Or we need to design the entire cargo restraints.

Answer: The most time consuming part is disconnecting the tiedown at both ends and dragging it out of the way. The current tiedown actually releases tension pretty quickly.

Question: Is electrical power available for some type of electrically actuated release?

Answer: Yes the LCAC has power available on deck, the power available is 110/220 V 400 Hz 3 phase, or 28 VDC.

Question: Should it be compatible with other vehicles being transported?

Answer: The cargo restraint should be compatible with a wide variety of vehicles, primarily those in the US Marine Corps inventory.

Question: Would metal or composites be more suitable?

Answer: Either is feasible as long as it is compatible with the environment, if metal is used it needs to be suitable for marine use (no bare carbon-steel).

Question: Need they be reusable?

Answer: That would be preferred but is not essential given cost considerations (if they are cheap enough then it might be acceptable for them to be disposable).

Question: Is the installment time as critical as the removal time?

Answer: No, the removal time is most critical, but the installment time is not entirely irrelevant.

Question: Would you consider a cargo restraint system that managed the “extra” length of strap / chain, therefore facilitating employment and deployment both beneficial and within the scope of this STTR?

Answer: The extra length is not really an issue with the current tiedowns, the cable or chain simply lies on the deck.

Questions:

- I need a set of drawings showing the current gripes and hard points on the deck area.
- Do you have any picture that you can show me how the current latching mechanism is used to secure the cargo restraint to cargo deck?
- In order to get a fully picture of the expected tasks involved with lashing and securing cargo on the LCAC could you provide me with a copy of load masters handbook or guideline.
- What are the current strap and or chain restraints currently used. I am interested in both the specification (size and material) for the chains or straps and the ratcheting devices used to tension the restraints.
- What are the lengths of the existing restraints?
- What is the adjustment range (minimum length to maximum length needed) for this new restraint system?

Answers: Below is a picture of an M1A1 tank being transported by LCAC. The following information is provided from the SEAOPS Cargo Loading Manuals and gives information on the current method of securing cargo.

More information on LCAC can be obtained at the following internet sources:

http://www.chinfo.navy.mil/navpalib/factfile/ships/ship-lcac.html

http://www.fas.org/man/dod-101/sys/ship/lcac.htm

http://navysite.de/ships/lcac.htm

http://www.hazegray.org/features/nato/us/lcac/

S9LCA-AA-SSM-050

Volume IV Revision 2

Part 1

SAFE ENGINEERING AND OPERATIONS
(SEAOPS)

LANDING CRAFT, AIR CUSHION
(LCAC)
(NON-SLEP)
CARGO LOADING MANUAL

THIS MANUAL SUPERSEDES SEAOPS VOLUME IV/PART I, REVISION 1, DATED 1 MAY 1994, AND ALL CHANGES THERETO.

DISTRIBUTION STATEMENT: DISTRIBUTION AUTHORIZED TO U.S. GOVERNMENT AGENCIES ONLY; FOR ADMINISTRATIVE/ OPERATIONAL USE (6 OCTOBER 2000). OTHER REQUESTS SHALL BE REFERRED TO COMMANDER, NAVAL SEA SYSTEMS COMMAND (CODE PMS 377), WASHINGTON, DC 20362-5101.

DESTRUCTION NOTICE: DESTROY BY ANY METHOD THAT WILL PREVENT DISCLOSURE OF CONTENTS OR RECONSTRUCTION OF THE DOCUMENT.

ISSUED BY AUTHORITY OF THE CHIEF OF NAVAL OPERATIONS UNDER THE DIRECTION OF COMMANDER, NAVAL SEA SYSTEMS COMMAND

FOR OFFICIAL USE ONLY

6 OCTOBER 2000

CHANGE B 1 JUNE 2002

CHAPTER 2

DESCRIPTION OF LCAC FEATURES

2-1. GENERAL

All LCACs have the same configuration for transporting cargo and passengers. The location of the center of gravity (CG) varies slightly from craft to craft. Specific location for each craft CG is being maintained in craft maintenance records.

2-2. CARGO DECK AREA

The LCAC cargo compartment extends from frame 1 through frame 19 as shown in Figure 2-1. The design dimensions are 27 feet wide, from frame 1 to 4 feet aft of frame 16, by 67 feet long plus the remainder of the aft ramp area which is 14 feet 10 inches wide by 10 feet 9 inches long as shown in Figure 2-1 . Out of a total length of over 78 feet only 49 feet 9 inches of the cargo deck is level. The level area starts at frame 4 and ends at frame 16. Forward of the level cargo deck, the deck is sloped 7 degrees beginning at frame 4 to frame 3 then 14 degrees to the bow ramp as shown in Figure 2-2. The rear deck area is sloped at 7 degrees beginning frame 16 and then to 12 degrees from frame 17 to the stern ramp as shown in Figure 2-2 . Both the bow and stern ramps are lowered and raised by electrically operated hydraulic cable winches and can be lowered to a maximum 22 degrees angle.

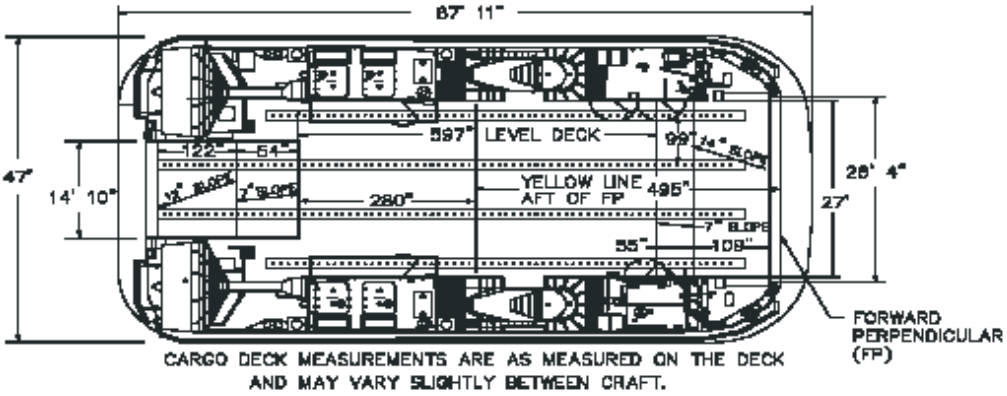

Figure 2-1 Cargo Deck with Dimensions

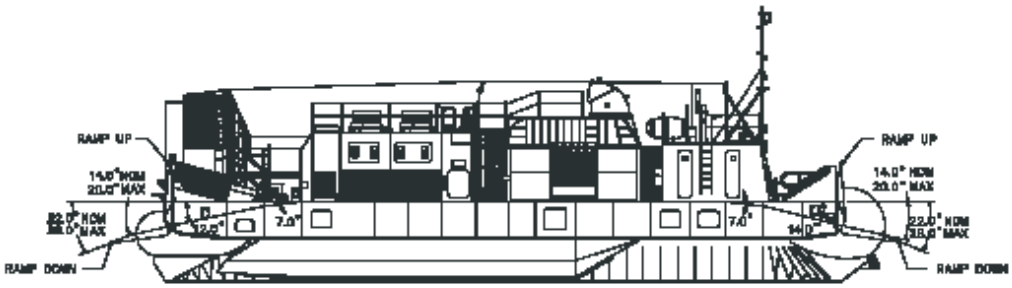

Figure 2-2 Cargo Deck Side View

2-3. CARGO DECK AND RAMPS

The LCAC cargo deck has approximately 1969 square feet and accommodates all combat and combat support equipment currently in the Marine Corps inventory. It is constructed of 3/8-inch aluminum plate with internal longitudinal tee stiffeners spaced every 9 inches, and athwartships framing every 4 feet. Four tiedown rails run the length of the deck. The rails are constructed of extruded aluminum sections welded flush with the deck. Tiedown sockets, 2 inches in diameter, are located on each rail. Stainless steel inserts in the sockets accept a standard grab hook assembly. Socket horizontal and longitudinal pull angles range from 15 to 80 degrees from horizontal. To aid in cargo positioning, a yellow athwartship line designating the geographical center is painted across the cargo deck at station 495 inches. Hash marks are painted 10 feet apart on the tiedown rails fore and aft from this athwartship line. A yellow longitudinal line is painted on the craft centerline for the same reason. Figure 2-1 shows the arrangement of the tiedown rails and deck markings. The semi-circles and dotted lines delineate areas of the cargo deck which should normally be kept clear to allow access to command, passenger, and engine modules and the flow of combustion air to the engines. Cargo in the vicinity of the main engine air inlets must be positioned at least 12 inches from the engine module bulkhead in order to ensure that sufficient air is available to the engines.

The bow ramp, 28 feet 4 inches wide by 8 feet 6 inches high, and the stern ramp, 14 feet 10 inches wide by 8 feet 6 inches high, both are operated by hydraulic cable winches, two for the bow and one for the stern ramp. These ramps are hinged at the base and open downward to provide a ground to craft interface.

2-3.1. Strength Limits The cargo deck load limitations are as shown in Figure 2-3. The areas near the center rails have additional strengthening for support of tracked vehicles and other vehicles with a gross weight over 50,000 pounds. Bow and stern ramps are capable of withstanding all cargo loads provided the ramp is extended to the ground position prior to loading. For specific limitations for the craft and cargo deck, refer to Table 2-1.

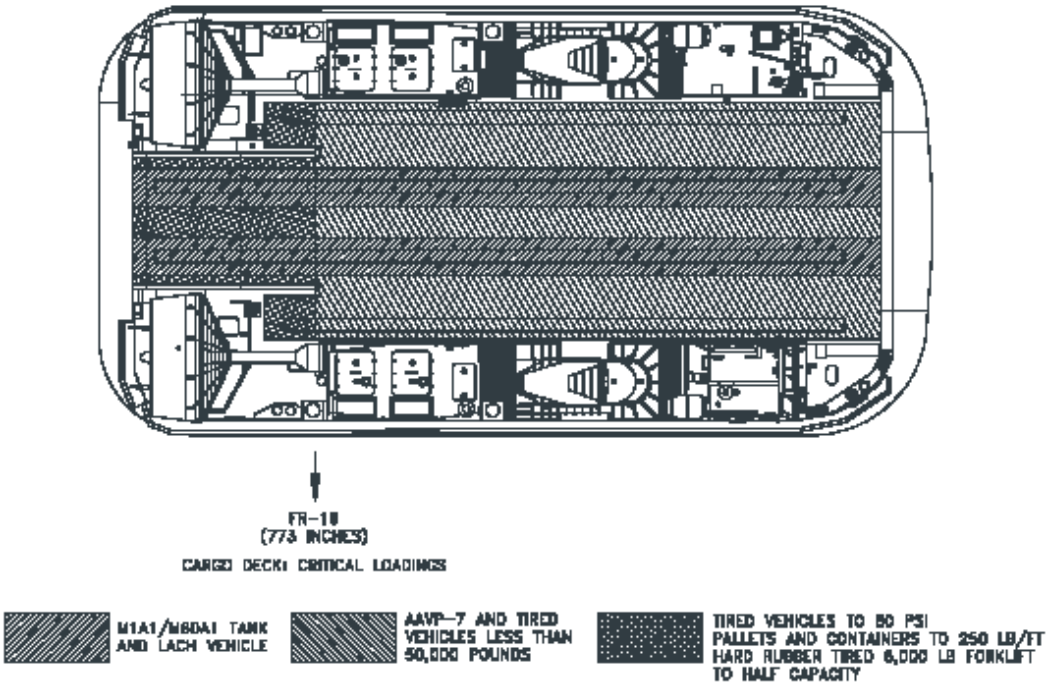

Figure 2-3 Cargo Deck Load Diagram

Table 2-1 Specific Limitations for the Craft and Cargo Deck

Item	Limitation
Maximum allowable craft weight	368,250 lbs conventional skirt; 372,700 lbs deep skirt
Optimal Operational (cargo and fuel) Longitudinal Center of Gravity (LCG) from the forward perpendicular (FP)	490-495
Optimal LCG loaded (lightship plus cargo)	487
Optimal Transverse Center of Gravity (TCG)	Centerline
Maximum allowable footprint without shoring	80 psi
Tracked and wheeled vehicles over 50,000 lbs	center rails only
6000-lb forklift (hard rubber tires) movement on deck load limit	3,000 lbs

2-3.2. Tiedown Rails The cargo deck has four rows of tiedown rails spaced approximately 99 inches apart with 2-inch diameter receptacles located between 12 and 15 inches apart along the entire length of the tiedown rail, see Figure 2-1 . The ultimate load capability for each tiedown socket is 40,250 pounds; working load is 35,000 pounds at the optimum 30 degree restraint angle.

2-4. TROOP SEATS AND COMFORT PROVISIONS

2-4.1. Troop Seats The LCAC has the capability of transporting up to 23 troops. Seats with seatbelts are provided for 7 troops in the starboard cabin and 16 in the port cabin as shown in Figure 2-4. One of the 7 troop seats on the starboard side is the troop commander seat which is on the crew deck (01 level). A wave commander seat is also provided on the 01 level behind the Craftmaster.

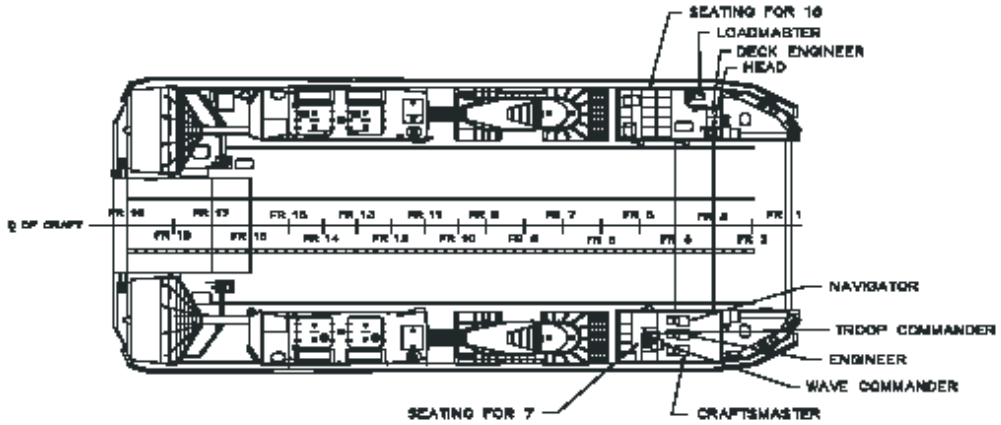

Figure 2-4 Crew and Passenger Seating

2-4.2. Comfort Provisions Comfort provisions, Figure 2-4, consist of a portable sanitary toilet, on the right side of the forward bulkhead of the port cabin, and a 5-gallon removable igloo water cooler, on the outboard bulkhead of the port cabin.

2-5. RAMP SYSTEMS

The LCAC has both a bow and stern ramp used for loading and offloading cargo. Both have an electrically driven hydraulically operated cable winch systems for raising and lowering the ramps.

2-5.1. Bow Ramp The bow ramp has two separate cable winch systems, one on each side adjacent to the port and starboard forward line handler stations as shown in Figure 2-5. The bow ramp is actuated by any of three switches marked UP/DOWN, one on the Craftmasters overhead panel and one on each of the port and starboard ramp pedestal covers. Either system is capable of raising or lowering the bow ramp. These two pedestal switches are mounted just above deck level on the forward outboard side of the

IVCU system is the primary internal communications system for the LCAC crew. The IVCUs are located in the port and starboard passenger compartments and by the cargo deck on each engine compartment as shown in Figure 2-6. The IVCUs are interconnected through a function box to all CCUs.

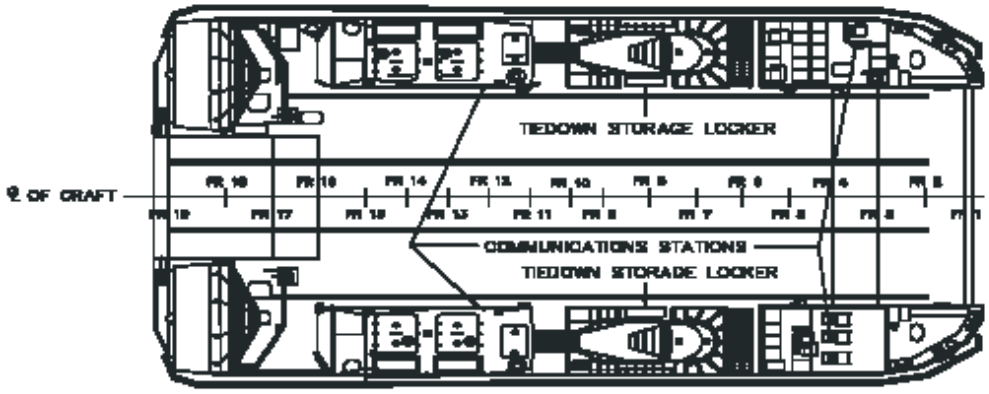

Figure 2-6 Communication Stations and Tiedown Storage Lockers

2-7. CARGO DECK LIGHTING

The LCAC has 14 deck lights which provide light for and around the cargo compartment. Eight of these are in the cargo deck area with four on each the port and starboard sides. There is one at each of the four linehandler stations and one at each the port and starboard life raft stations. Red lens are provided for wartime use with yellow lens the standard for peacetime. All the lights are controlled from the LIGHTS panel at the navigators station.

2-8. MISCELLANEOUS ITEMS

2-8.1. Tiedown Devices There are several different tiedown assemblies currently used onboard LCAC to secure cargo. For cargo with tiedown provisions, there are three different Peck and Hale tiedown lashing assemblies. The 35,000-pound adjustomatic cable-type tiedown shown in Figure 2-7 is being phased out and replaced by two chain-type tiedowns. The 15,000-pound chain tiedown is shown in Figure 2-7A, and the 35,000-pound chain tiedown is shown in Figure 2-7B. The cable-type tiedowns (50/craft) are being replaced with 16 15,000-pound and 35 35,000-pound chain tiedowns per craft. An additional 20 35,000-pound chain tiedowns and 30 end fitting hooks are being carried in each detachment load out to ensure sufficient quantities for heavy weather requirements and as extra tiedown assemblies.

The 35,000-pound adjustable cable tiedown assembly has a 12-foot cable and 9 feet of adjustment beads. It has a minimum length of 6 feet. The 15,000-pound chain tiedown has a maximum length of 12 feet and a minimum of two feet five inches. The 35,000-pound chain tiedown has a maximum length of 15 feet four inches and a minimum length of three feet two inches. Cargo with no tiedown provisions must be restrained by cargo nets or the 5,000 pound CGU-1/B 15-foot aircraft tiedown restraints shown in Figure 2-8. The 15,000-pound chain tiedowns are to be used on vehicles or pallets with a weight of 10,000 pounds or less. For cargo above 10,000 pounds, use 35,000-pound tiedowns.

2-8.2. Stowage Of Cargo Handling Equipment Fifty cable-type or 51 chain-type cargo tiedowns are carried aboard each LCAC. There are two stowage lockers, one on each side of the craft, between the lift fans (Figure 2-6) for storing the tiedown assemblies. If required, additional tiedowns may be stored below decks. Shoring or dunnage materials, when carried separately, will be strapped to the cargo deck.

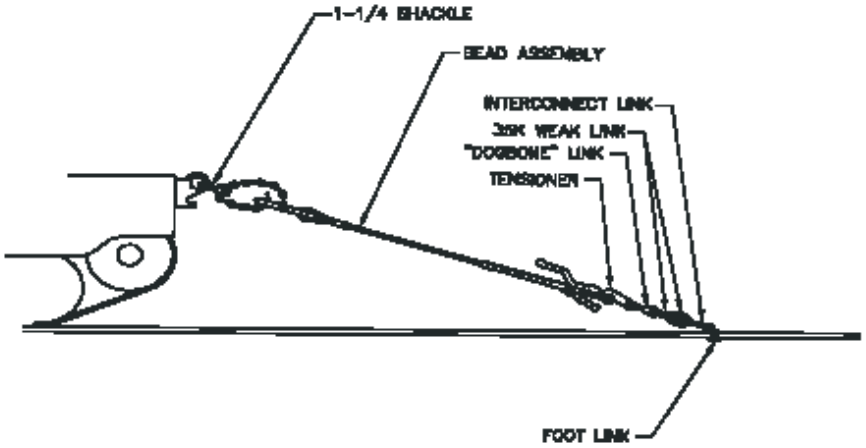

Figure 2-7 35,000 Pound Tiedown Assembly

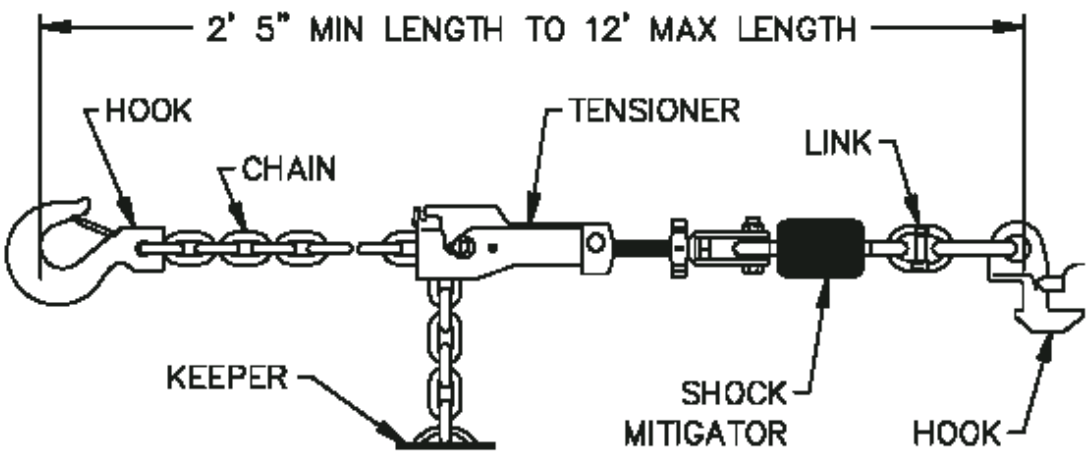

Figure 2-7A 15,000-Pound Chain Tiedown Assembly

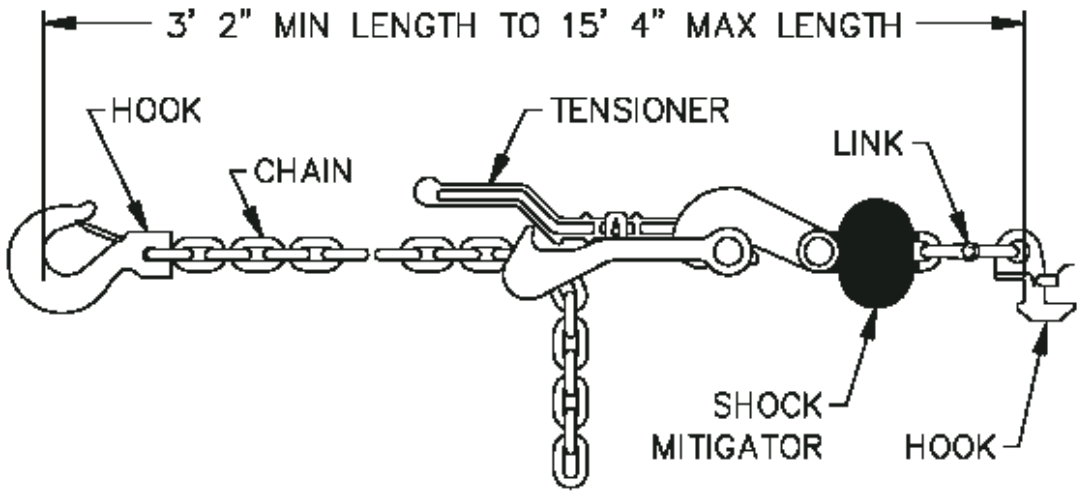

Figure 2-7B 35,000-Pound Chain Tiedown Assembly

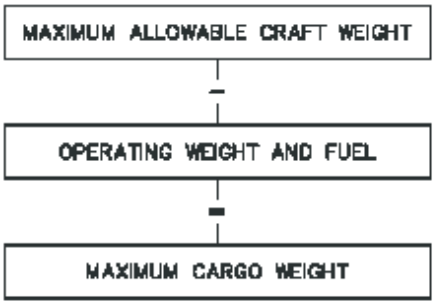

Figure 4-1 Maximum Cargo Weight Calculation

4-2.3. Center Of Gravity The LCAC has a point about which it will balance. This balance point is the center of gravity (CG). CG is affected by weight and both longitudinal (forward and aft) and transverse (port and starboard) distances. Any item which is added or removed from the LCAC will cause a shift in the balance of the LCAC and also cause the CG of the LCAC to shift, if the weight was not added or removed at the CG. If the CG shifts too far forward, aft, port or starboard, the LCAC will be unsafe for cushioned flight.

4-2.4. Restraint LCAC cargo is subjected to high wind, acceleration, vibration, seawater, pitching and rolling, and sudden stoppage. These forces act more strongly in some directions than others, and tend to shift the cargo unless it is properly restrained. Since the LCAC and cargo move forward during normal operation, the cargo will tend to keep on moving forward, unless properly restrained. However, if the LCAC is suddenly slowed by a change in speed (plow-in or emergency stop), grounding or crash, the cargo must be restrained against other forces trying to move it aft, from side-to-side (laterally), or up off the cargo deck floor (vertically).

4-2.5. FOD Cargo on the LCAC cargo deck is affected by all elements of weather and airflow across the craft during transit. This condition creates a FOD situation potentially dangerous to the craft. FOD can be anything left unsecured on vehicles or general cargo, the craft or in the well deck that could be blown into the propellers or lift fans, ingested into the engine inlets and cause damage to the craft or injury to personnel.

4-2.6. LCAC Weight And Force Distribution The LCAC, like an aircraft, must be properly loaded to maintain craft design operating characteristics. Unbalanced loading can lead to craft damage and prevent mission accomplishment. This can be prevented through proper loading.

4-3.7. Troop Loading When troops are embarked in armored vehicles, the weight of the troops is included in the weight of the vehicle. In armored vehicles (AAV, LAV, MBT, Hardback HMMWVs), the vehicle crew and assigned troops may remain in the vehicle while the LCAC is underway. These personnel must wear single hearing protection. For all other vehicles, crews and embarked troops shall be carried in the LCAC passenger compartments.

The LCAC has the capability of carrying up to 23 troops without PTM installed. Seven spaces are allocated in the starboard cabin and 16 in the port cabin. With PTM installed, a maximum of 180 additional troops can be carried aboard LCAC. Chapter 6 contains a system description and operating procedures for PTM. The weight of these troops must be considered as a portion of the overall cargo weight and included in the load planning process. For planning purposes, the following weights are average:

- 250 pounds for one combat loaded Marine with weapon, flak jacket, pack, and basic allowance of ammunition.
- 200 pounds for one Marine without combat equipment.

Total troop weight will vary, depending upon the number to be embarked, and consequently should be considered for each serial load. The number seated in each cabin should be equalized if possible to minimize the effect on athwartship balance. For fore and aft balance, troop weight must be added to and computed in the same manner as is done for vehicles and general cargo.

Prior to embarking troops in the passenger compartments ensure the following steps are complete.

a. Troop seats and seatbelts installed and operational.

b. Passenger compartment deck cleared of unnecessary articles.

c. Emergency equipment installed and checked.

4-3.8. Litter Loading There are no provisions in the passenger compartments for litter transport of injured personnel. In an emergency, this does not preclude the use of the passenger compartments from being used to carry injured personnel when no other means are available to get personnel medical attention as soon as possible. With PTM installed, litters can be carried aboard LCAC. Chapter 6 contains a system description and operating procedures for PTM.

4-3.9. Post Loading After cargo has been loaded, tiedown devices must be applied to secure the load in the proper location and to provide the required amount of restraint.

4-4. CARGO RESTRAINT

LCAC operations are not permitted unless onboard cargo is properly restrained. When the cargo is properly secured to the LCAC cargo deck, the possibility of damage occurring to the load or the craft by cargo shifting is greatly reduced. Cargo restraint is the responsibility of the loadmaster.

4-4.1. Restraint Criteria The amount of restraint that must be used to keep cargo from moving, in any direction is "restraint criteria". It is expressed in units of the force of gravity, or Gs, the cargo must

overcome. The Gs required to be restrained in four directions for both peacetime/training and combat loads are shown in Table 4-26.

Table 4-26 LCAC Restraint Criteria

Direction	Peacetime/ Training	Combat
Forward	1½G	1G
Aft	1G	½G
Side	1G	½G
Vertical	1½G	½G

This means the force exerted by an object or cargo to be restrained is the normal weight times the Gs of the restraint criteria. For example, an object weighing 2,000 pounds must have a forward restraint of 3,000 pounds (1,000 pounds x 1 1/2Gs = 3,000 pounds) for peacetime/ training operations. For other directions, the same 2,000-pound object must have a restraint criteria to restrain a force of 2,000 pounds aft, 2,000 pounds to either side, and 3,000 pounds upward. For the object to be safely carried, the restraint provided must be equal to, or greater than, these amounts.

Cargo restraint criteria for the vehicles listed in the vehicle loading handbook have already been calculated and should be utilized by the loadmaster for restraining these vehicles. For all other cargo the loadmaster/load planner must calculate the restraint required.

Restraint is given the name of the direction in which it is meant to keep the cargo from moving. "Forward restraint" keeps it from moving forward. "Aft restraint" keeps it from moving aft. "Side restraint" keeps it from moving to one side or the other. "Vertical restraint" keeps it from moving upward only, the downward restraint is supplied by the cargo deck.

The minimum cargo restraint criterion used for LCAC tiedown positions are categorized into two arrangements, peacetime/training and hostile fire (see Table 4-26).

Both tiedown arrangements provide for the safe transport of equipment aboard LCAC but the peacetime/training plan provides a lower risk and should be used at all times unless damage to the craft, personnel, and/or equipment can be anticipated from hostile fire during the unload evolution ashore. The hostile fire arrangement will significantly reduce tiedown removal for large items of equipment, which have previously had more tiedowns. A listing of USMC equipment, Table of Authorized Material Control Number (TAMCN) is provided in Table 4-6.

The weights listed in Table 4-6 are based upon USMC embarkation weights. Restraint criterion are based upon expected operational loading of the LCAC operating in a SWH of 3.5 to 5 feet. However, when the LCAC is secured within a well deck ship, cargo on the LCAC deck may be subjected up to a SWH of 29.5 to 45.5 feet. Forward, aft, and athwartship tiedown requirements will vary from ship to ship, depending on operational characteristics, and are provided in SEAOPS Volume III .

4-4.2. Cargo Load Restraint The tiedown devices shown in Figure 2-7 are connected between the cargo load and the tiedown receptacles in the cargo deck to provide the means for restraining the cargo load. Tiedown receptacles have a maximum load capability of 40,250 pounds. Receptacle horizontal and longitudinal pull angles range from 15 to 80 degrees from horizontal. Working load is 15,000/ 35,000 pounds at the optimum 30 degree restraint angle.

4-4.3. General Rules For Application Of Tiedown Devices The greatest amount of restraint is required in the forward and aft directions; therefore the vertical angle should be as small as possible, but large enough to provide the required vertical restraint. Side restraint criteria are much less than forward and aft restraint criteria. Vertical restraint should normally be no problem as of all of the tiedown devices used for forward and aft, and side restraint are providing some vertical restraint as long as they are connected to the cargo load at some vertical angle.

The following general rules should be used, whether or not the cargo is equipped with tiedown fittings:

a. Determine number of tiedown devices required to provide required restraint in all directions.

b. Always apply an even number of tiedown devices attached in pairs for forward and aft restraint and on opposite sides for side restraint.

c. Check restraint by reference to restraint computation values.

d. After applying all required tiedown devices, especially on cargo not equipped with tiedown devices, check to ensure load will not slip. Additional tiedowns may be necessary to prevent load slippage.

4-4.4. Cargo Tiedown Calculation Procedures This section provides cargo tiedown restraint calculation procedures for each tiedown, using both angle measurements and distance measurement methods.

4-4.4.1. Cargo Tiedown Calculation Procedures Using Angle Measurements An illustration of the angles involved for a single tiedown is provided in Figure 4-27. Figures 4-28 and 4-29 are examples of the forms used to calculate and record cargo restraints. Except for a straight pull parallel to the decks and at a right angle to the cargo, each tiedown will provide restraint in three directions: forward or aft, athwartship and vertically. The amount varies with the angles of the tiedown. The percentage difference from a straight pull is provided in Table 4-27.

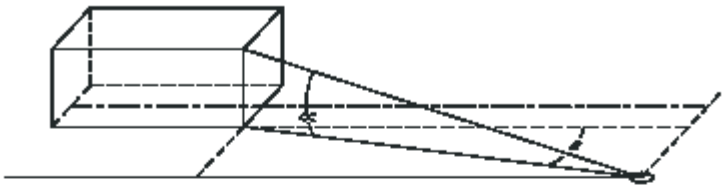

Figure 4-27 Angle Measurements to Determine Cargo Restraint

arranging composite loads, cargo should not be stacked so that it is top-heavy. The height of a composite load should not be greater than its length in the longitudinal direction, if it can be avoided. Nets may be used to provide adequate tiedown devices and to minimize slippage of composite cargo.

c. Shift of cargo.

Since the tiedown devices are not actually attached to the cargo, care must be taken to ensure that the load cannot slip out from under the tiedown devices. This is especially true when several items are tied down together. After the correct number of tiedowns have been applied to provide the required restraint, the load should always be checked to see if any part of it can slip free. In many instances where several items are tied down together, it may be necessary to add additional tiedowns to completely secure the load.

4-4.7. Restraint Of Cargo With Tiedown Provisions Vehicles, special shipping containers, and some items of equipment are provided with rings or other suitable points to which cargo tiedown devices can be attached. This type of cargo should be secured as shown in Vehicle Loading Pocket Handbook. When cargo is secured by attaching tiedown devices directly to the cargo, there are two factors that must be kept in mind:

a. Applied restraint.

A tiedown device, attached between a tiedown ring or point on an item of cargo and a tiedown receptacle in the cargo deck, will provide restraint equal to the strength of the tiedown in the direction of the tiedown device. In practice, however, it is not feasible to attach tiedown devices purely in the direction in which restraint is required because of the location of the tiedown provisions on the cargo. Most tiedowns out of necessity must be attached at an angle to the desired direction of restraint, and consequently only a part of the effective strength of the tiedown will be available to provide restraint in the desired direction as discussed in cargo tiedown calculation procedures.

b. Tiedown angle.

The tiedown angle is very important and must be considered since it determines the amount of restraint which can be obtained in any direction. To minimize the number of tiedowns, the tiedowns should be applied with both a vertical and a side angle in order to provide restraint in three directions.

4-4.8. Container Tiedown Securing of ISO containers to the deck of the LCAC may be accomplished with the use of existing tiedown rails and 35,000-pound tiedown assemblies. One end of the assembly attaches to a corner of a container, and the other fits into the socket on the tiedown rail providing the most optimum lead. Only 20-foot ISO containers and MCESS containers will be carried. Characteristics of each type are listed in Table 4-30. Containers may be stowed either fore and aft or athwartships, and the number of tiedowns required to secure the container must be calculated. Dunnage is also required to be used when loading containers on the LCAC deck.

Table 4-30 ISO Standard and MCESS Container Dimensions

CONTAINER TYPE	LENGTH (Feet)	WIDTH (Feet)	HEIGHT (Feet)	MAXIMUM GROSS WEIGHT (Pounds)
ISO Type ICC	20	8	8.5	44,806
ISO Type IC	20	8	8	44,806
MCESS Rigid (TAMCN C6122)	20	8	8	15,000
MCESS Knock Down (TAMCN C6113)	20	8	8	15,000
MCESS EMI (TAMCN C6112)	20	8	8	15,000

4-4.9. Tiedown Device Operation For operation of tiedown devices, see Figure 4-38. The capacity of a tiedown device is limited to the capacity of the tiedown fitting and strength of the cargo attaching points.

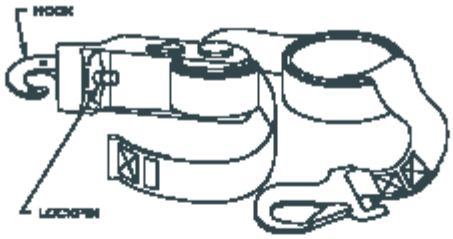

CGU–1/B TIEDOWN

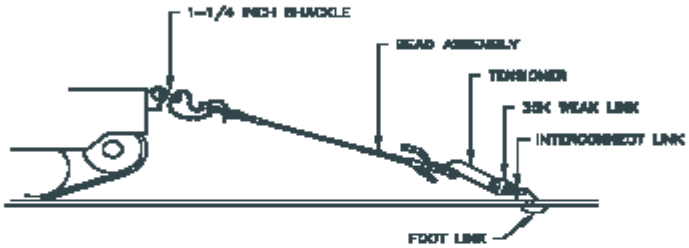

35,000–POUND TIEDOWN ASSEMBLY

LCAC DECK FITTING

Figure 4-38 Cargo Tiedowns (Sheet 1 of 2)

15,000–POUND CHAIN TIEDOWN ASSEMBLY

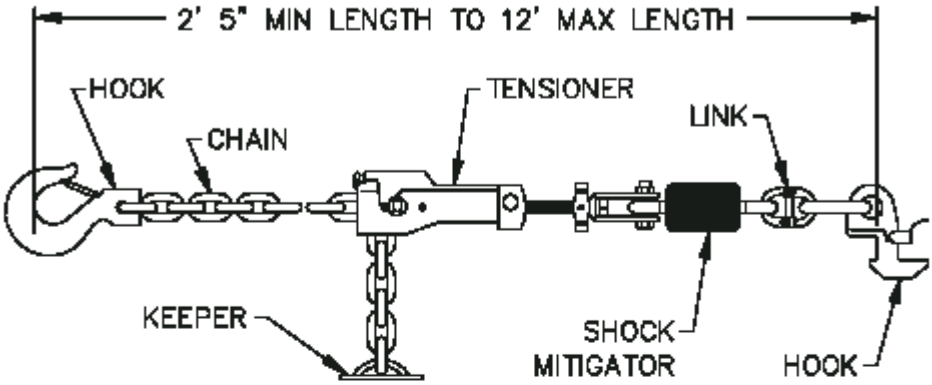

35,000–POUND CHAIN TIEDOWN ASSEMBLY

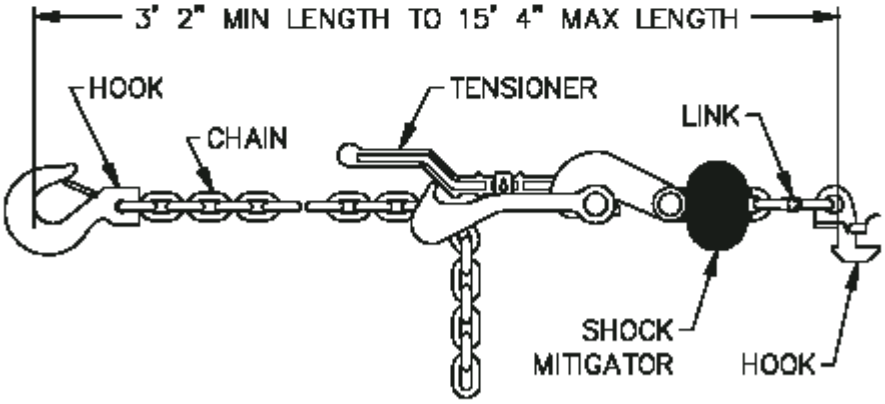

Figure 4-38 Cargo Tiedowns (Sheet 2 of 2)

The deck fitting assembly is key-fitted into deck tiedown rails. Figure 4-38 shows insertion of deck fitting into socket. The keeper shall be up when inserting the deck fitting and down when locked-in. For the 35,000-pound adjustable cable tiedown assembly, after installing the deck fitting, place the chain bridle around the vehicle lashing point. In the event a tiedown point is not provided, a structural member of sufficient size and strength (e.g., vehicle bumpers and/or chassis tiedown points) may be used by bridling the chain and attaching to the cable assembly grab link. After attaching the chain to the cargo, release tensioner handle. Remove slack in cable assembly, and select number of spacer beads required. Slide tensioner adapter onto cable above spacer beads. Lift up on tensioner handle and push forward to lock. If there is not enough tension on cable assembly, release handle and remove tensioner assembly from cable. Slide as many spacer beads as required down cable and reattach tensioner adapter to cable. Lift up on handle and lock in place. If handle cannot be locked in place, release tensioner from cable and slide a few spacer beads at a time up cable until lock tensioner handle will lock.

For the 15,000 and 35,000-pound chain tiedown assemblies, after installing the deck fitting, attach the hook tot he vehicle/cargo lashing point. Release the tensioner handle and remove slack in the chain. Lift tensioner and lock into place. If there is not enough tension on the chain assembly, release the handle and take slack out of chain. Lift handle and lock into place.

The CGU-1/B 5,000-pound capacity tiedown device operates in the following manner. Attach hook to tiedown deck fitting. Open unit and pull webbing through the cylinder. Work ratchet to tighten webbing. Lock handle in position in direction of hook. Loosen by squeezing spring-loaded lockpin in ratchet handle and pull webbing.

The embarked troop unit is responsible for performing the actual securing of cargo on the craft under the supervision of the Loadmaster. Care must be taken when tying to vehicle frames, axle housings, or attachment points in order to prevent damage to the vehicle's brake lines, hydraulic lines, electrical wiring, or other components. The Loadmaster will ensure all tiedowns are properly placed and secured.

4-4.10. Cargo Protection United States Marine Corps (USMC) amphibious vehicles have been experiencing increasing levels of corrosion when embarked or preloaded on LCAC. Covers for the LAV and M198 Howitzer were developed by the First Marine Expeditionary Force (IMEF) for use onboard LCAC to limit the effects of salt-water corrosion. These covers, if not properly secured, are potential material for foreign object damage to LCAC propellers. These covers shall be used only on preloaded equipment. The covers shall be removed prior to any shore movement. See Chapter 5 for specific procedures.

4-5. CARGO OFFLOADING

4-5.1. General Considerations For Offloading Cargo Offloading procedures are similar to loading procedures previously discussed in this section. Offloading of cargo can be expedited by assembling necessary unloading aids (as required) in the area of the cargo offloading. The equipment required for offloading is essentially the same as that required for loading a specific load (i.e., crane, forklift, shoring, etc.).

The method selected for offloading vehicles and other cargo items will depend upon: (1) where they were loaded (from mother ship or shore-based supply point); (2) how they were loaded (by crane or driven); (3) how they will be offloaded (by crane or driven across bow or stern ramps); and (4) where they will be offloaded (into well deck, water, or ashore). A correct loading sequence ensures adequate clearance for offload maneuvering. The craft may be positioned to permit a bow, stern, or bow and stern ramp exit as needed.

General procedures for offloading the craft, after it has come to a complete stop, are as follows.

a. Shut down main engines.

CAUTION

Prior to bow or stern ramp operations ensure the area around the ramps is clear of debris and personnel so as to not damage the craft or cause injury to personnel when the ramps are lowered or raised.

b. Remove tiedowns, and clear vehicle lanes.

c. Lower ramp.

d. Deploy dunnage as necessary.

e. Offload vehicles and cargo (loadmaster assisted unless in combat mission).

f. Disembark passengers.

g. Stow all cargo tiedowns unless picking up a backload.

h. Inspect cargo deck for FOD.

i. Raise ramp.

j. Continue mission.

4-5.2. Offloading Ashore For offloading vehicles ashore, the vehicles on the craft will be positioned so that they may be offloaded in the most expeditious manner. All vehicles will be capable of driving off the craft under their own power (towed loads coupled with prime mover), but support vehicles may be required to tow inoperative vehicles. The offloading ramp must be supported equally by the ground.

4-5.3. Offloading Shipboard LCAC shall be offloaded under the direction of the ship's cargo handling organization. Crew and embarked troops shall not depart LCAC while another LCAC in a forward well deck position is operating its main engines.

Offload of cargo from LCAC to support ship depends on the ship configuration, position and condition of the cargo, as well as LCAC refueling requirements. Cargo may be lifted off the deck, driven off under its own power, or removed via forklifts.

4-5.4. Offloading/Transfer At Sea When at sea transfer of people or equipment is required, the craft shall be hullborne. The craft may be at bare steerageway or dead in the water, as is appropriate to the situation. Transfer may be conducted at either forward linehandler's station or from the lowered stern ramp. Transfer at the starboard linehandler's station is preferable in order to allow the Craftmaster continuous observation of the transfer.

Since the stern ramp floats, all slack in the stem ramp cable shall be pulled from the pedestal. This allows the ramp to float free without damage. A tight cable may part as the ramp moves with the sea. The number of personnel on the ramp shall be kept to a minimum and only for short periods of time.

m. Attach (third) green strap to port side net between the two middle wheels. Pull underneath directly opposite the starboard side, loop strap through the net, and feed back under diagonally to front port side corner netting. Attach (fourth) green strap on starboard side of net between first and wheel from front. Pull underneath directly to the opposite side (port) between the first and second wheels from the front. Loop through the net and hook in starboard front corner netting on trim vane.

n. Pick up the front lift legs. The starboard lifting legs will be pulled tightly and wrapped along netting on lower trim vane to port side and hooked with leg hook (tuck in loose leg straps). The same process must be completed with the port side lifting legs.

o. The final (fifth) green strap will be fully extended, running from the net near second tire from front just above Herculite cover around the side draping under trim vane, weaving it as necessary to secure any flapping pieces, and attaching to the same place on opposite side.

CAUTION

LAV crews should not be stationed inside the LAV with covers installed.

p. During initial operations, maintain a close watch on the covers. Come off cushion and resecure the nylon straps as required to preclude billowing.

5-3. M198 HOWITZER COVER PROCEDURES

Underway tests and previous operational experience with the M198 cover indicate it is satisfactory for use aboard LCAC with the following precautions.

a. The M198 Howitzer cover may come loose from the muzzle brake and can be secured with the use of duct tape.

b. Care must be exercised to prevent undue stress on gun covers that may cause seams to rip and allow the cover to become FOD material.

5-4. M1A1 TIEDOWN PROCEDURES

5-4.1. M1A1 Tiedown The weight of the M1A1 Main Battle Tank requires numerous tiedowns to ensure safe transport aboard LCAC. In order to reduce the time required for installation and removal of the tiedowns, special adaptive hardware has been developed for use on the M1A1. The hardware consists of four 1.25" Crosby screw type shackles and two welded rings installed onto the tank's front attachment rings, as shown in Figure 5-1. The rear hardware consists of a 1.75" pear link that is attached over the tow pintle as shown in Figure 5-2. All of this additional hardware is installed on the tank prior to transport and removed prior to offload. Installation of the tiedowns is the same as for other vehicles, i.e., once the tank is in position on the LCAC all tiedowns are attached. The removal process is modified to save time by first removing the front tiedowns and attaching hardware then the tank is started and backed up approximately 12 inches. The pear link can then be removed from the tank without removing the tiedowns.

Figure 5-1 M1A1 Front Welded Rings and Shackles

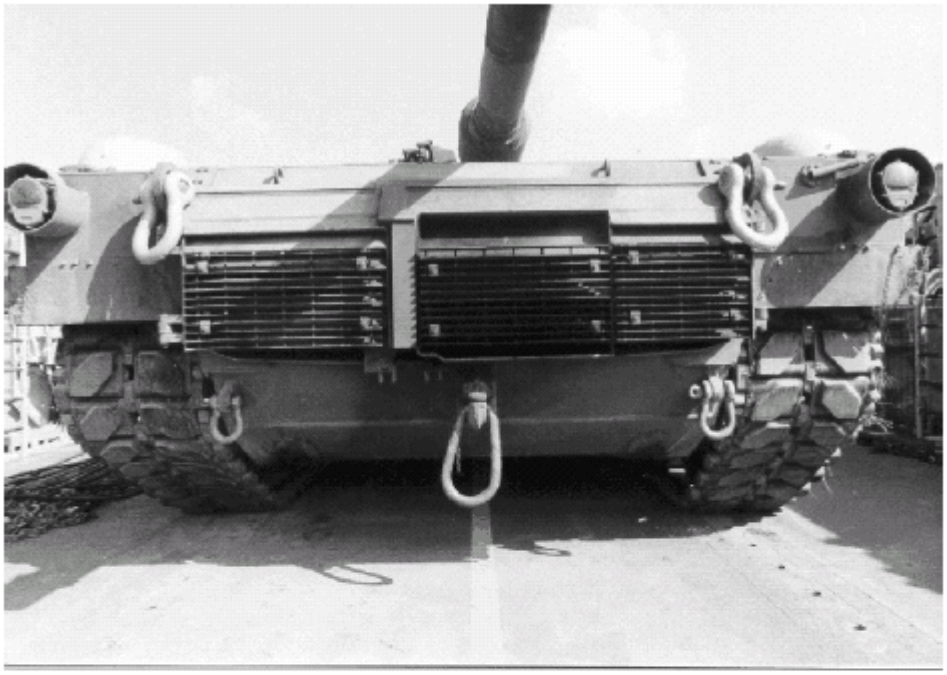

Figure 5-2 Aft Pear Link Assembly

CAUTION

Strict adherence to director signals shall be observed by the tank driver when backing up to ensure that equipment is not damaged and personnel not injured when removing the aft pear link assembly.

After offloading the tank all tiedowns and attaching hardware shall be removed from the cargo deck and properly stowed. M1A1 tiedown arrangements for both peacetime/training and hostile fire missions, as taken from the Vehicle Loading Pocket Handbook, are shown in Figure 5-3.

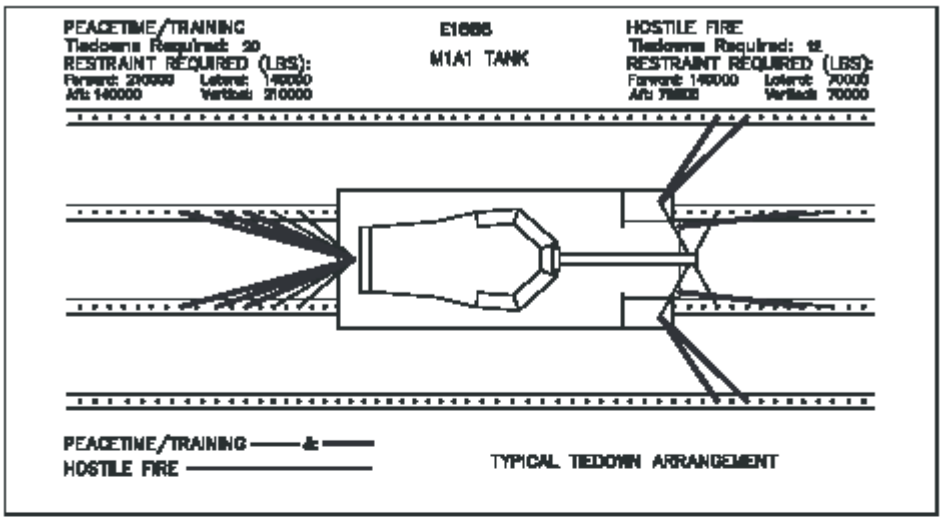

Figure 5-3 Peacetime/Training and Hostile Fire Tiedown Arrangement for the M1A1

5-4.2. Onloading And Offloading M1A1 With Mineplow Onloading and offloading LCAC with a mineplow configured M1A1 requires shoring when accomplished from a hard surface or well deck. Shoring is not required when operating on sand or other soft surface. The LCAC bow ramp angle must be reduced to prevent the mineplow from contacting the hard surface of the ramp or ship deck. The ramp to hard surface interface point must be raised by 12 inches. This can be accomplished by raising the ramp 12 inches supported with shoring. The LCAC ramp is extended by additional shoring. Alternatively, a combination of raising the ramp less than 12 inches and placing additional shoring on top of the ramp will accomplish the same result. Recommended shoring material is railroad ties, but other suitable heavy timbers may be used.

5-5. AAV RIGGING AND LAUNCH PROCEDURES

WARNING

The AAV launch procedure is potentially hazardous to crewmembers, the vehicle, and the craft. Safety of crews, vehicles, and craft shall be a paramount consideration when conducting this operation.

During the conduct of an AAV launch, the following safety actions shall be implemented.

S9LCA-AA-SSM-060

Volume IV **Revision 3**

Part 2

SAFE ENGINEERING AND OPERATIONS
(SEAOPS)

VEHICLE LOADING POCKET HANDBOOK

THIS MANUAL SUPERSEDES SEAOPS VOLUME IV, PART 2, REVISION 2, DATED 1 MAY 1994, AND ALL CHANGES THERETO.

DISTRIBUTION STATEMENT: DISTRIBUTION AUTHORIZED TO U.S. GOVERNMENT AGENCIES ONLY; FOR ADMINISTRATIVE/ OPERATIONAL USE 1 JUNE 2002. OTHER REQUESTS SHALL BE REFERRED TO COMMANDER, NAVAL SEA SYSTEMS COMMAND (CODE PMS 377), WASHINGTON, D.C. 20376-3101.

DESTRUCTION NOTICE: DESTROY BY ANY METHOD THAT WILL PREVENT DISCLOSURE OF CONTENTS OR RECONSTRUCTION OF THE DOCUMENT.

ISSUED BY AUTHORITY OF THE CHIEF OF NAVAL OPERATIONS UNDER THE DIRECTION OF COMMANDER, NAVAL SEA SYSTEMS COMMAND

CHAPTER 1 USMC EQUIPMENT CHARACTERISTICS AND TIEDOWN ARRANGEMENTS

1-1. INTRODUCTION

This chapter provides vehicle characteristics and tiedown arrangements for USMC and other equipment transported on the LCAC.

1-2. EQUIPMENT AND VEHICLE DIMENSIONAL DATA

The first sheet of the figure for each type of equipment/vehicle provides a line drawing and dimensional characteristics including CG. Extensive research was conducted in an effort to obtain accurate dimensions for the listed equipment. Variations in the configuration of an equipment type may significantly affect the equipment dimensions. For example, a five-ton cargo truck, TAMCN D1059, is configured both with a winch (Model M925) and without a winch (Model M923). The addition of the winch increases the overall length by 16 inches and the weight by approximately 725 pounds. Also, height is dependent upon whether or not fording gear is installed, the canvas cap top and windshield is up or down, and the canvas bed cover and bows are installed.

These weights are based upon label plate or technical manual data for the equipment weight. Equipment not normally loaded have only an empty weight listing. This weight is the normal operating weight for that equipment. For all other vehicles, empty weight means in an unloaded condition. Loaded weights are for off-road design loads, i.e., TAMCN 1061 weight full capacity is listed as 36,607 pounds or 10 tons over empty weight. The maximum on-road weight for TAMCN 1061 is 20 tons or 46,607 pounds. Maximum weights where applicable are listed in the remarks section. Much of the equipment data was obtained from Marine Corps Order 4610.35.

1-3. RESTRAINT FORCE REQUIRED

The drawings show a restraint plan for USMC vehicles in two different configurations: peacetime/training, and hostile fire. The tiedown sockets shown are the actual tiedown points, within one foot of the actual socket, to be used when lashing the vehicle to the cargo deck. For 35,000-pound lashing, the recommended tiedown pattern is to use every other tiedown socket on any given rail. For the 15,000-pound tiedowns, use no more than four consecutive sockets on any given rail.

The restraint force required to safely tie down each equipment/vehicle to the deck of the LCAC for both peacetime/training and hostile fire conditions are listed on each figure. For peacetime/training, the restraint force required in the forward (right side of each figure) and vertical directions equals 1.5G each, and the lateral and aft (left side of each figure) directions equals 1.0G each. For hostile fire, the restraint force required in the forward direction equals 1.0G, and the vertical, lateral and aft directions equals 0.5G each.

1-4. TYPICAL TIEDOWN ARRANGEMENTS

The second sheet of the figure for each type of equipment/vehicle provides the typical tiedown arrangement and number of tiedowns required under peacetime/training and hostile fire conditions, including tiedown arrangements using the 15,000-pound chain tiedowns on equipment/vehicles with a gross weight of 10,000 pounds or less. Use either the cable or chain tiedowns but not both. The amount of required restraint in each direction for each type of equipment/vehicle is also listed. If vehicle weight increases, additional tiedowns could be required. Loadmasters should ensure vehicle weights are known prior to loading.

The minimum length of the 35,000-pound cable tiedown is 6 feet from the deck socket to the end of the tiedown chain attachment point. Usable length is 2'5″ to 12' for the 15,000-pound chain tiedown and 3'2″ to 15'4″ for the 35,000-pound chain tiedown.

CAUTION

Consideration should be given to securing the bitter end of the tiedown chains to prevent damage to the craft or cargo.

Equipment is indexed by two methods. See Table 1-1 for a list of equipment in USMC Table of Authorized Material Control Number (TAMCN) sequence. For an index of equipment by category (e.g., communications, trailers, heavy trucks, ordnance equipment, etc.), see Table 1-2.

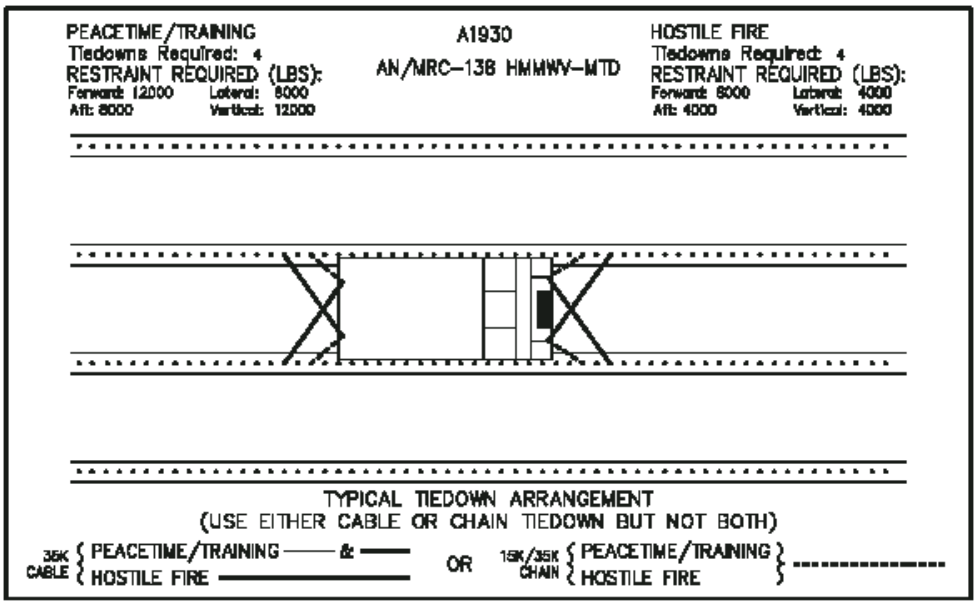

Figure 1-1 Radio Set, AN/MRC-110 HMMWV-MTD (Sheet 2 of 2)

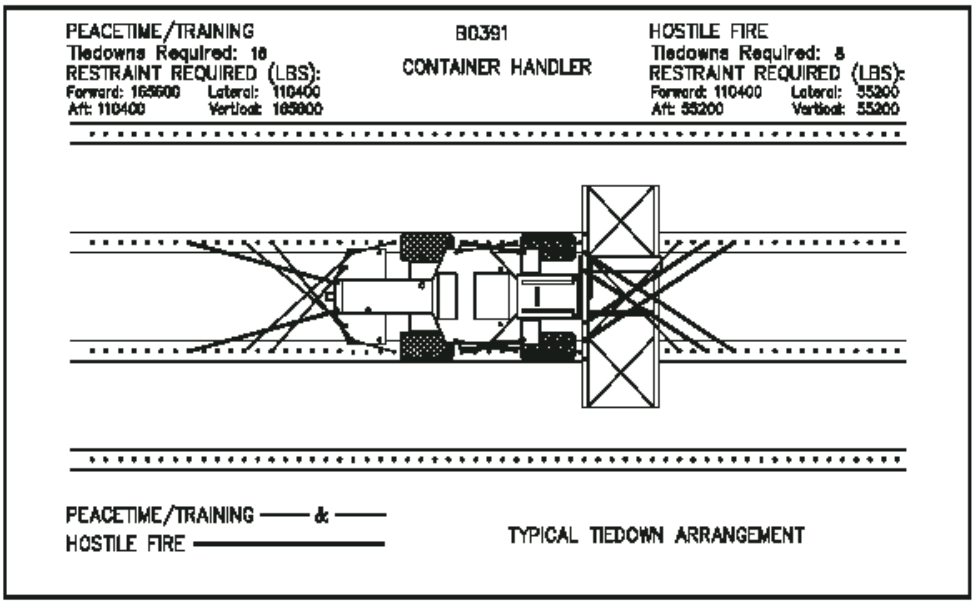

Figure 1-2 Container Handler, RT, 50,000 lb (Sheet 2 of 2)

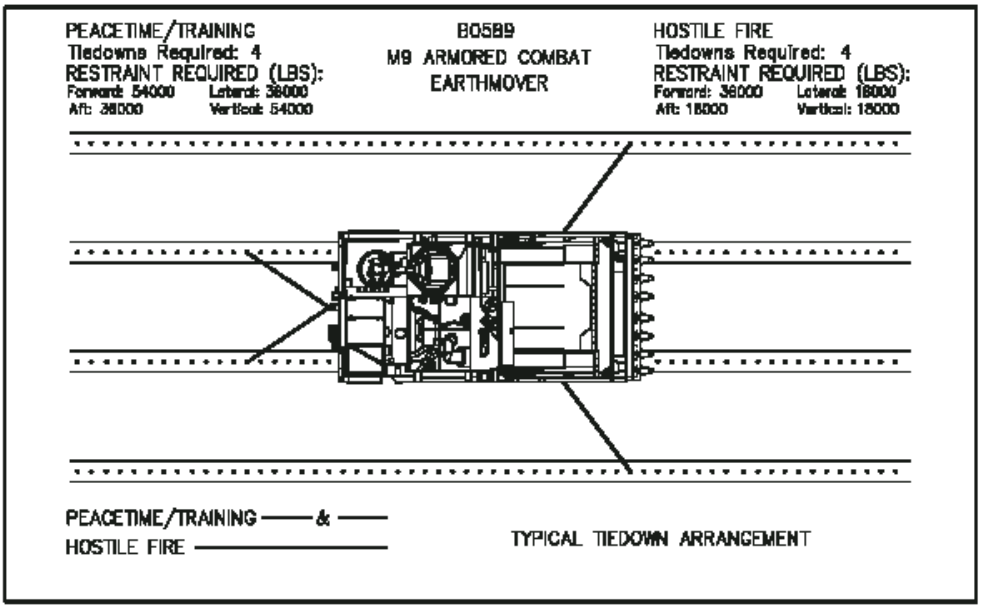

Figure 1-4 M9 Armored Combat Earthmover (ACE) (Sheet 2 of 2)

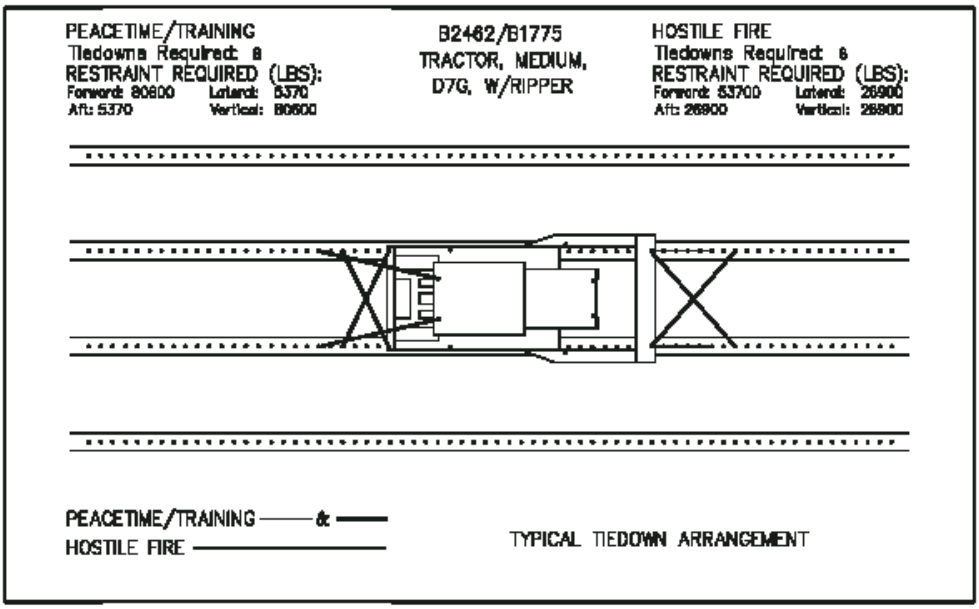

Figure 1-13 Tractor, Medium, D7G, w/Ripper (Sheet 2 of 2)

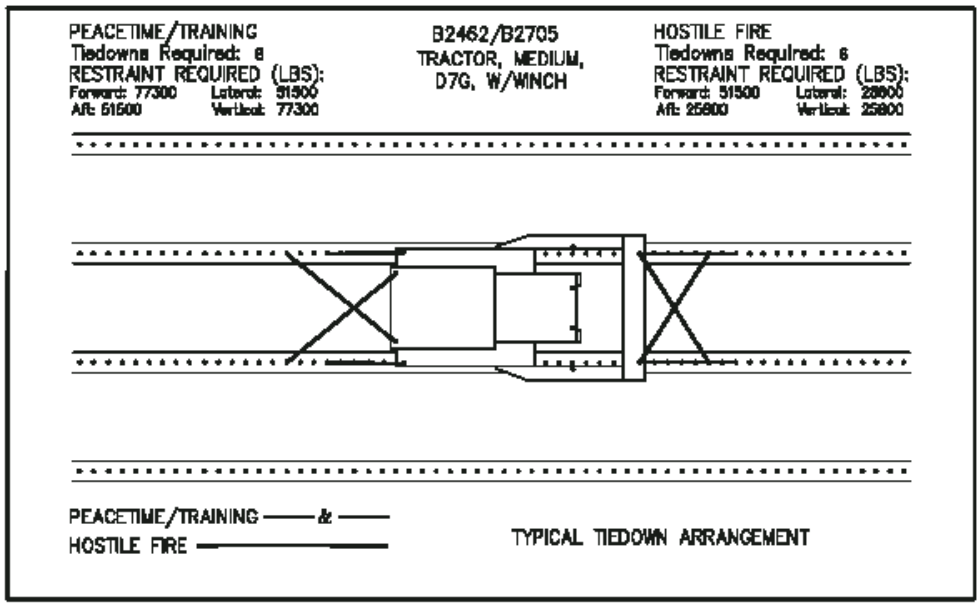

Figure 1-14 Tractor, Medium, D7G, W/Winch (Sheet 2 of 2)

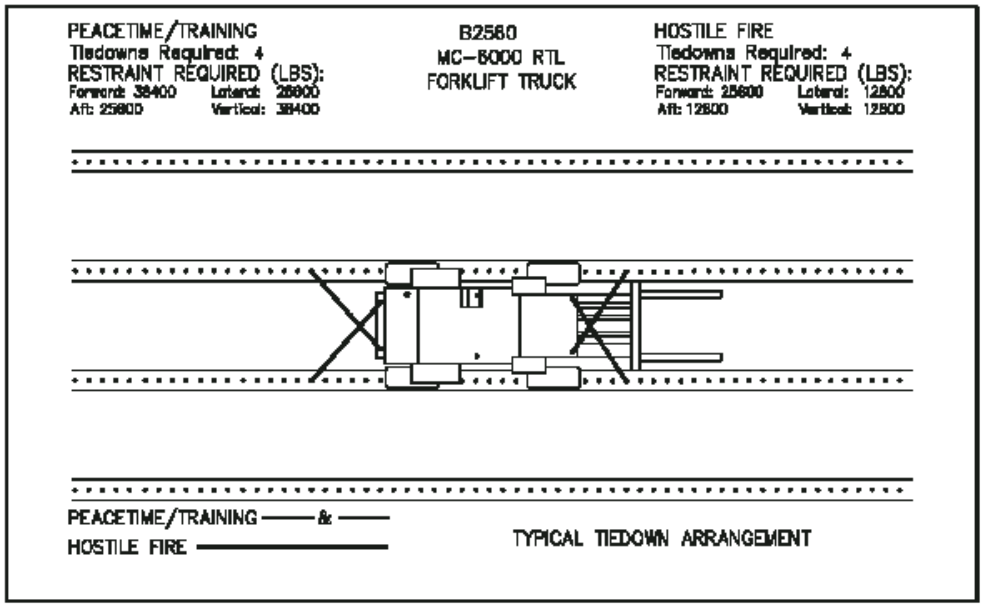

Figure 1-20 Truck, Forklift MC-6000 RTL (Sheet 2 of 2)

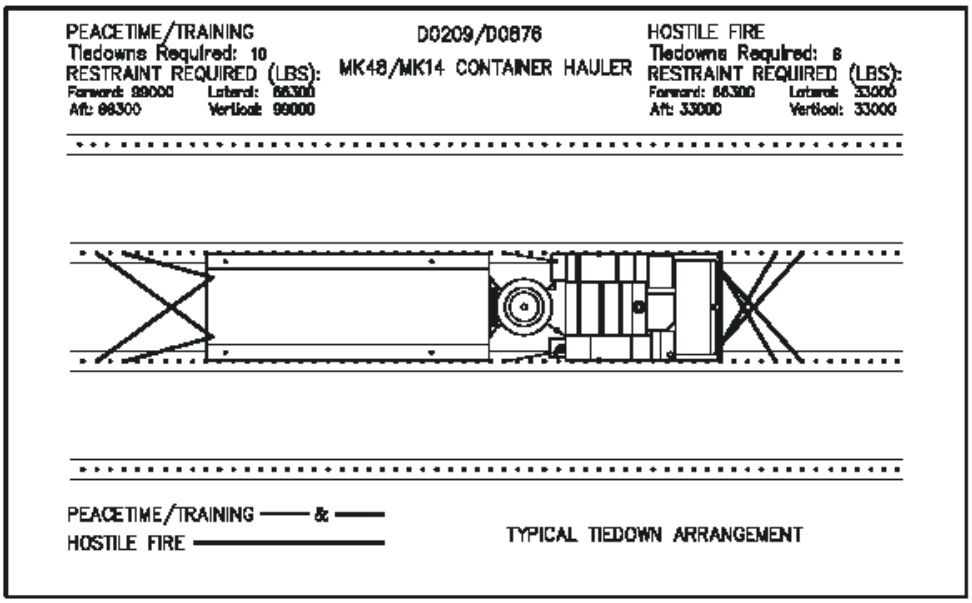

Figure 1-26 MK 48/MK 14 Container Hauler (LVS) (Sheet 2 of 2)

PEACETIME/TRAINING
Tiedowns Required: 10
RESTRAINT REQUIRED (LBS):
Forward: 99000 Lateral: 66300
Aft: 66300 Vertical: 99000
D0209/D0876
MK48/MK14 CONTAINER HAULER
HOSTILE FIRE
Tiedowns Required: 8
RESTRAINT REQUIRED (LBS):
Forward: 66300 Lateral: 33000
Aft: 33000 Vertical: 33000
PEACETIME/TRAINING & HOSTILE FIRE
TYPICAL TIEDOWN ARRANGEMENT

Figure 1-26 MK 48/MK 14 Container Hauler (LVS) (Sheet 2 of 2)

S9LCA-AA-SSM-060

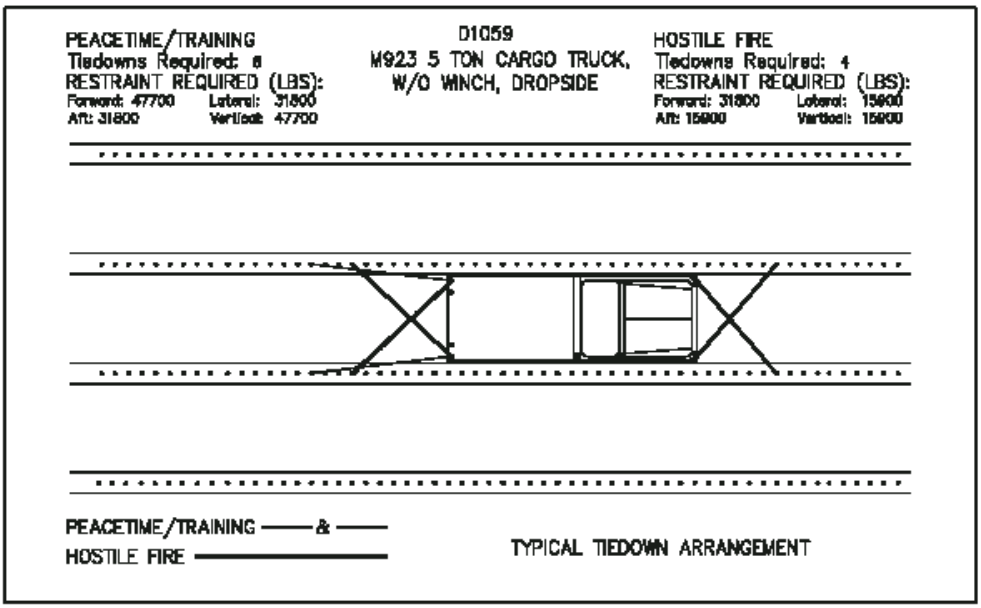

Figure 1-38 Truck, Cargo, Dropside, 5 Ton, w/o Winch, M923 (Sheet 2 of 2)

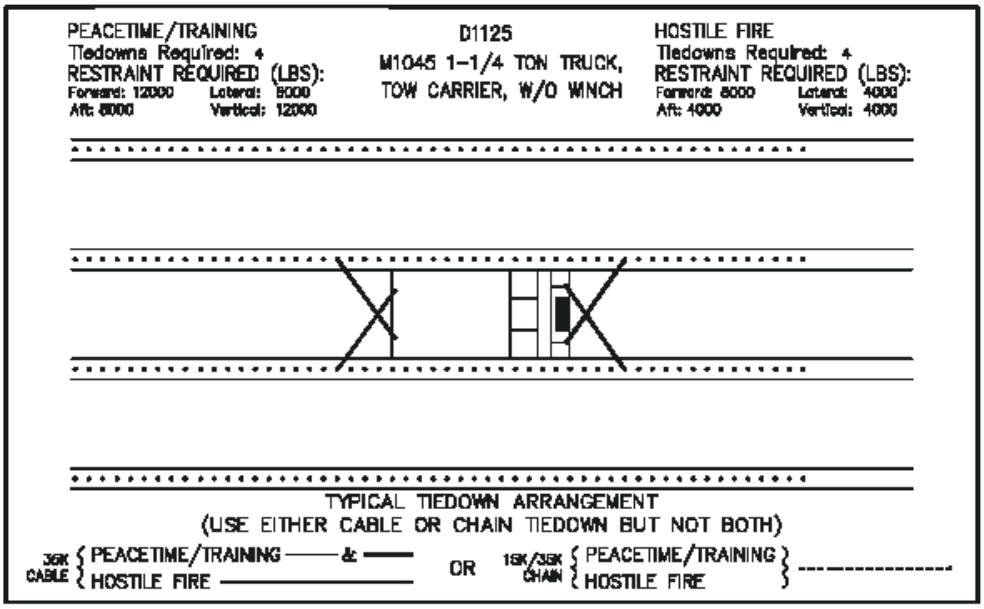

Figure 1-45 Truck, Tow Carrier, w/o Winch, 1-1/4 Ton, HMMWV, M1045 (Sheet 2 of 2)

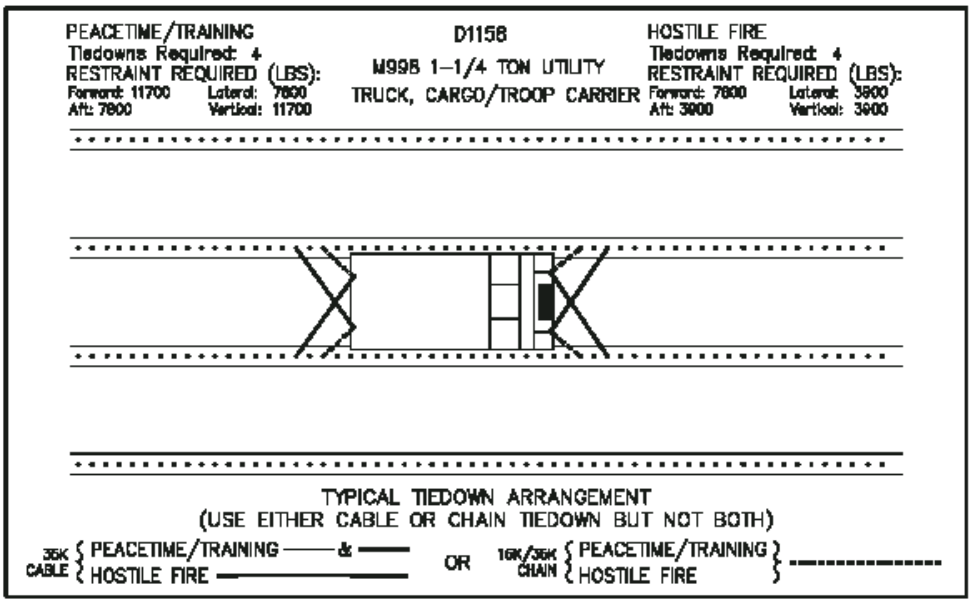

Figure 1-46 Truck, Util, Cargo/Trp, Carrier, 1-1/4 Ton, HMMWV, M998 (Sheet 2 of 2)

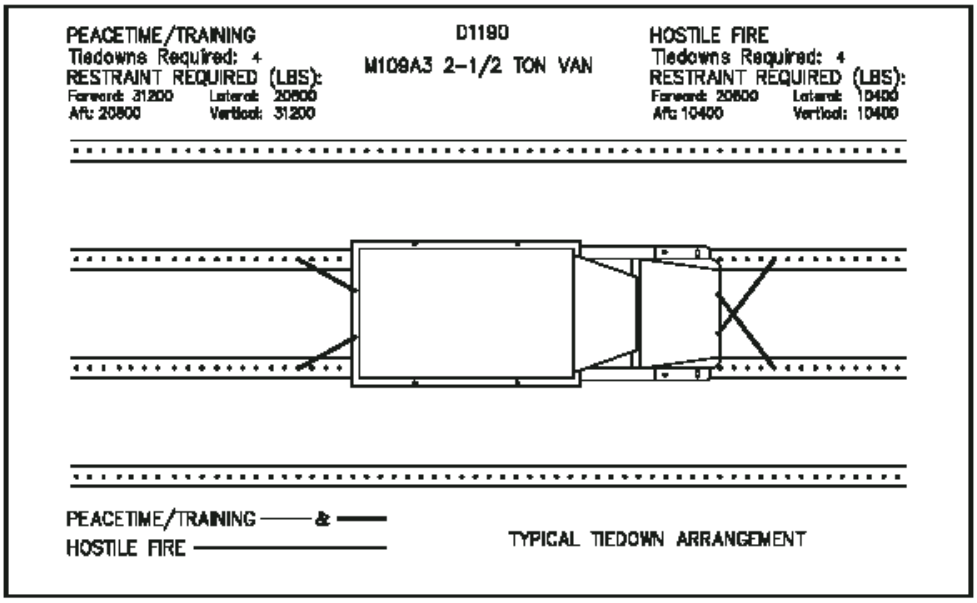

Figure 1-50 Truck, Van, 2-1/2 Ton, M109A3 (Sheet 2 of 2)

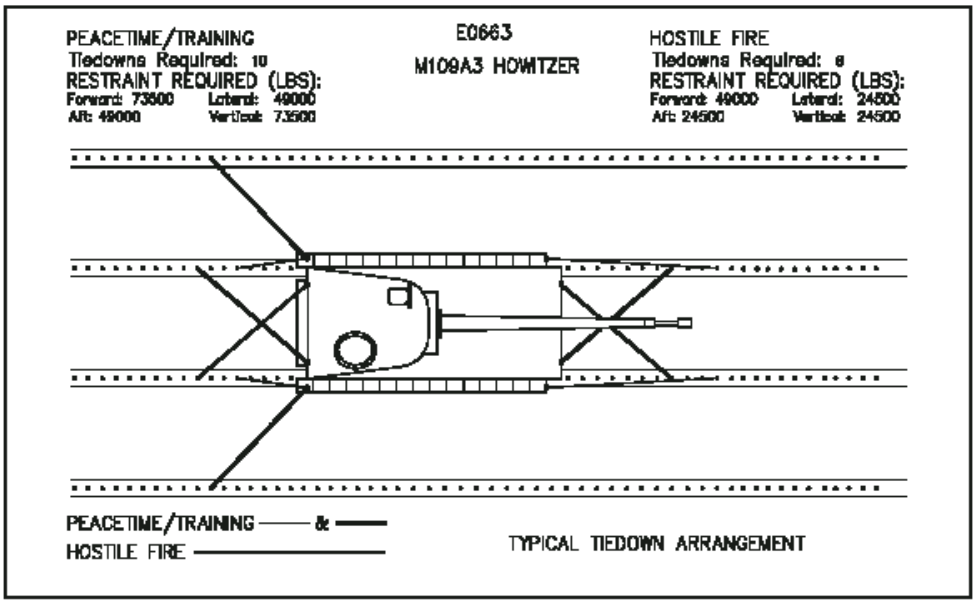

Figure 1-53 Howitzer, Medium, SP, 155mm, M109A3 (Sheet 2 of 2)

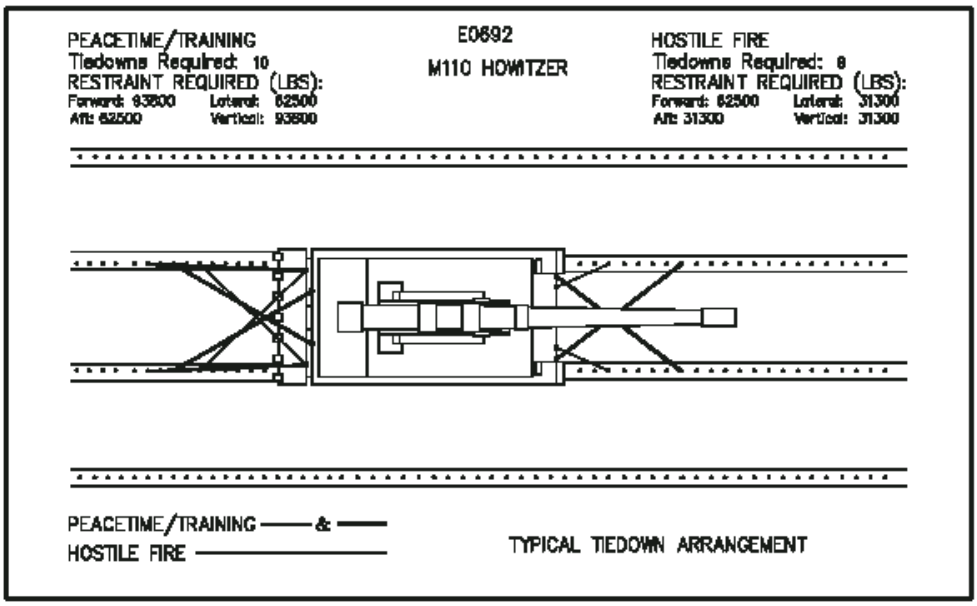

Figure 1-55 Howitzer, Heavy, SP, 8 in, M110 (Sheet 2 of 2)

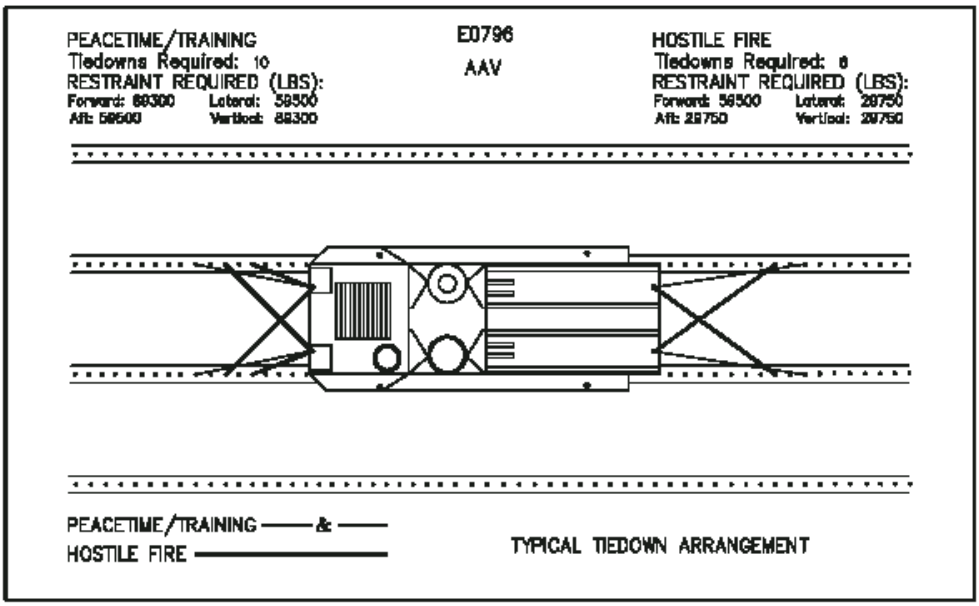

Figure 1-56 Assault Amphibious Vehicle, Command, AAVC-7A1 (Sheet 2 of 2)

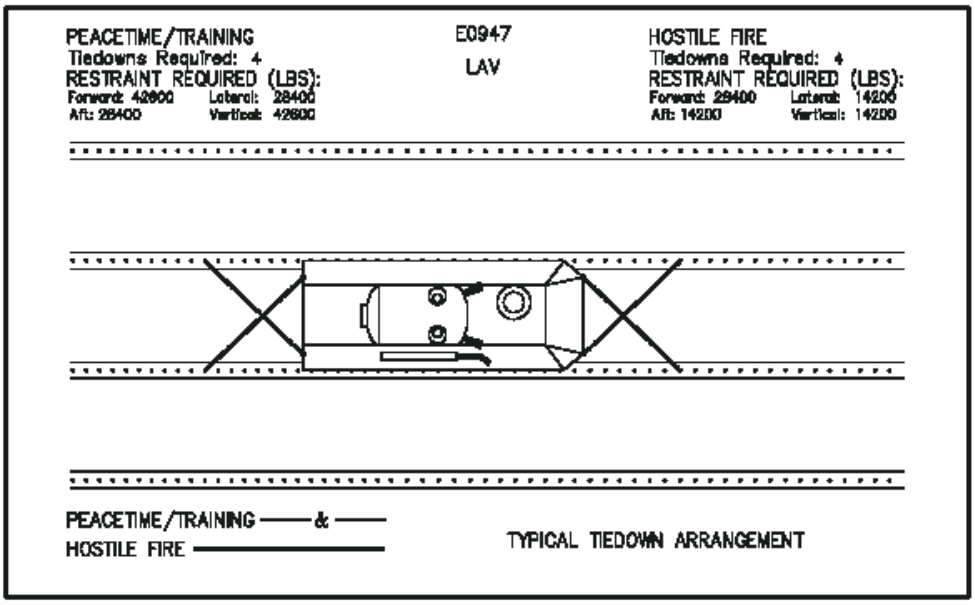

Figure 1-57 LAV, Light Assault Vehicle, 25mm (Sheet 2 of 2)

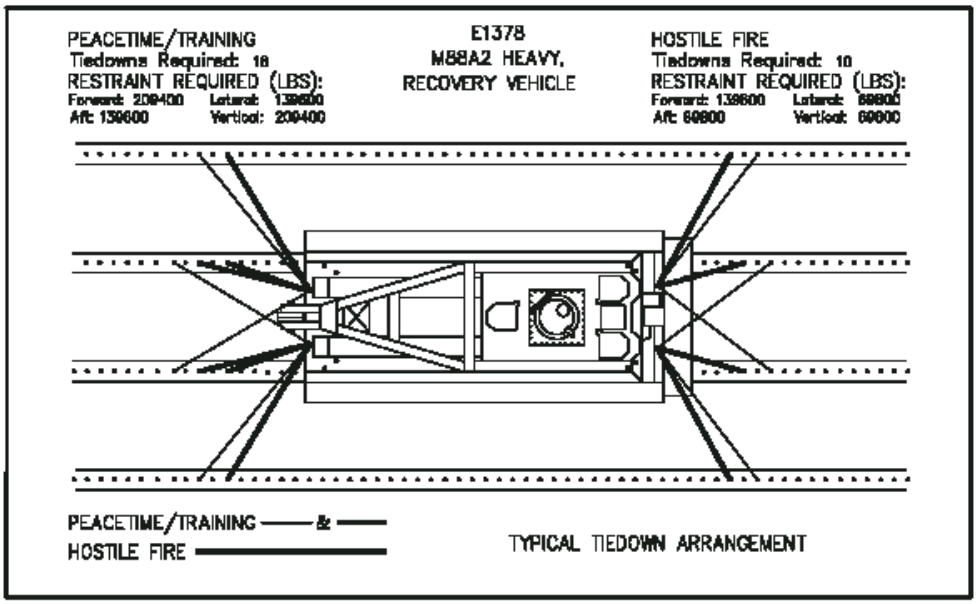

Figure 1-60 Recovery Vehicle, Heavy, M88A2 (Sheet 2 of 2)

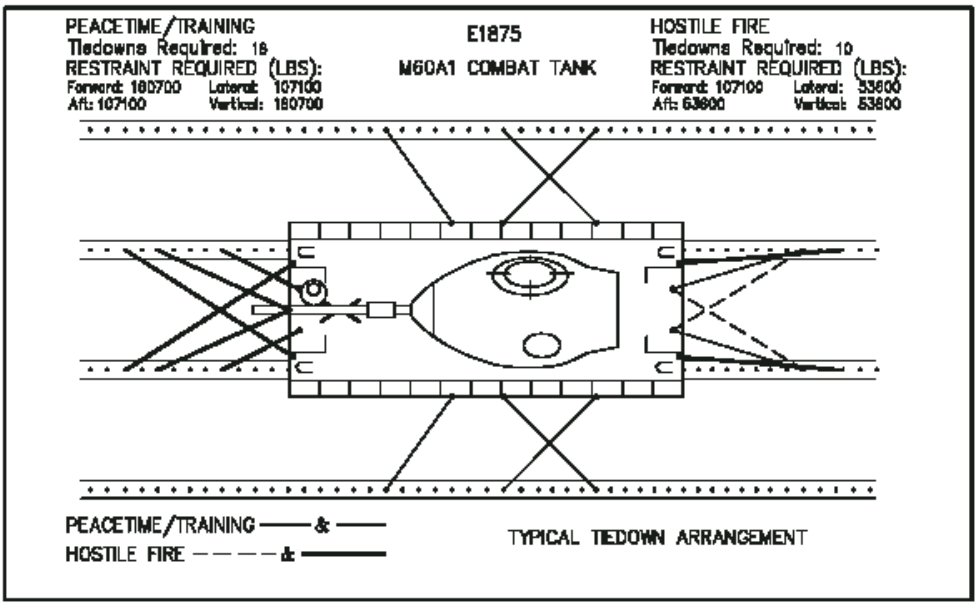

Figure 1-61 Tank, Combat, FT, 105mm Gun M60A1 Rise/Pass (Sheet 2 of 2)

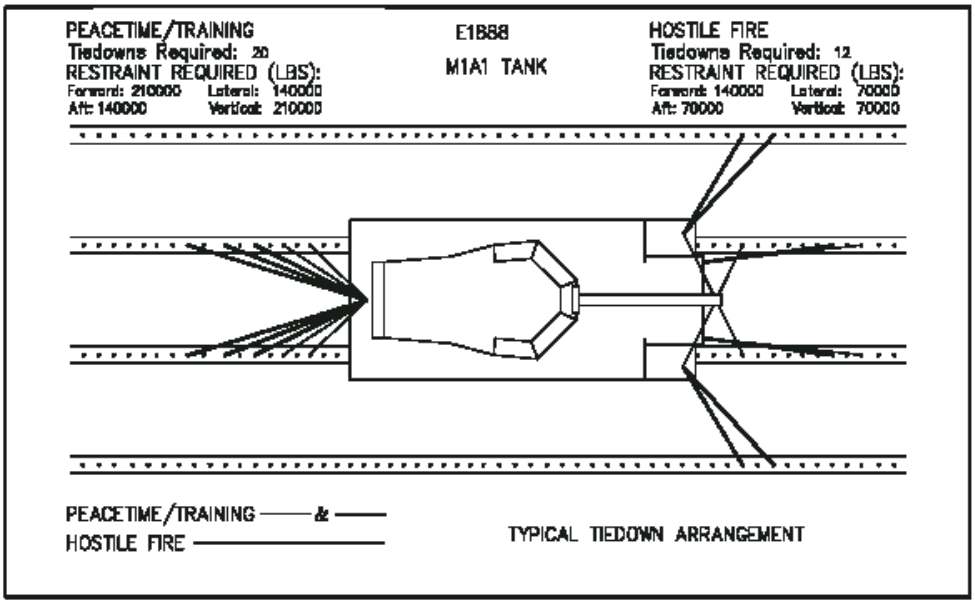

Figure 1-63 Tank, Main Battle, M1A1, 120mm Gun (Sheet 2 of 2)

CHAPTER 3 SERIAL LOADS OF MULTI-VEHICLE TYPES

3-1. INTRODUCTION

This chapter provides sample serial and cargo lane loads in common vehicle combinations. (See Figures 3-1, 3-2, 3-3, 3-4, 3-5, 3-6, 3-7, 3-8, 3-9 and 3-10). It provides a plan view of the LCAC cargo deck and all vehicles included in the load. However, when using serial loads, it is still necessary to balance the load and lightship CG to an LCG of 487 to ensure optimum craft performance.

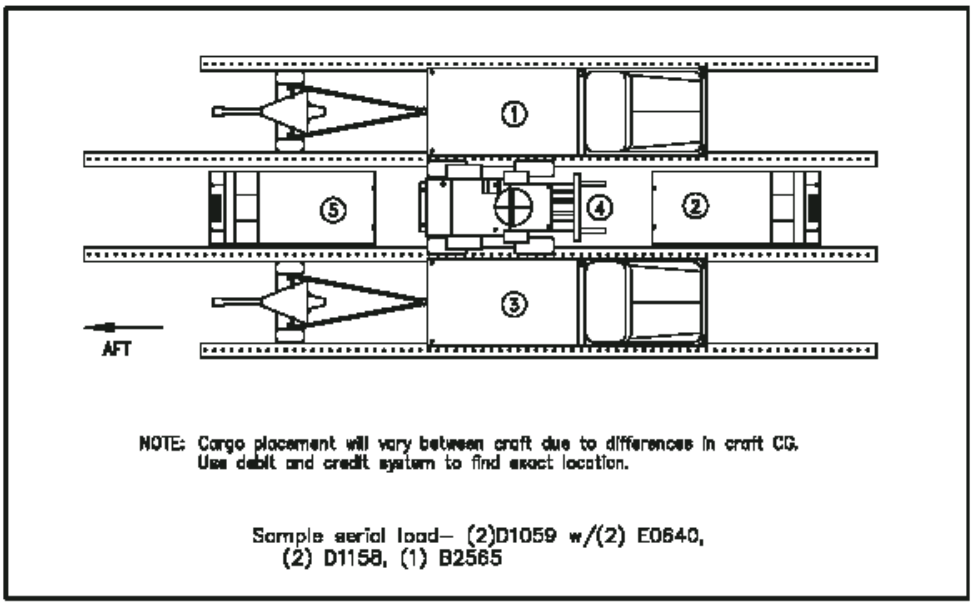

Figure 3-1 Sample Serial Load - (2) D1059 w/(2) E0640, (2) D1158, (1) B2565

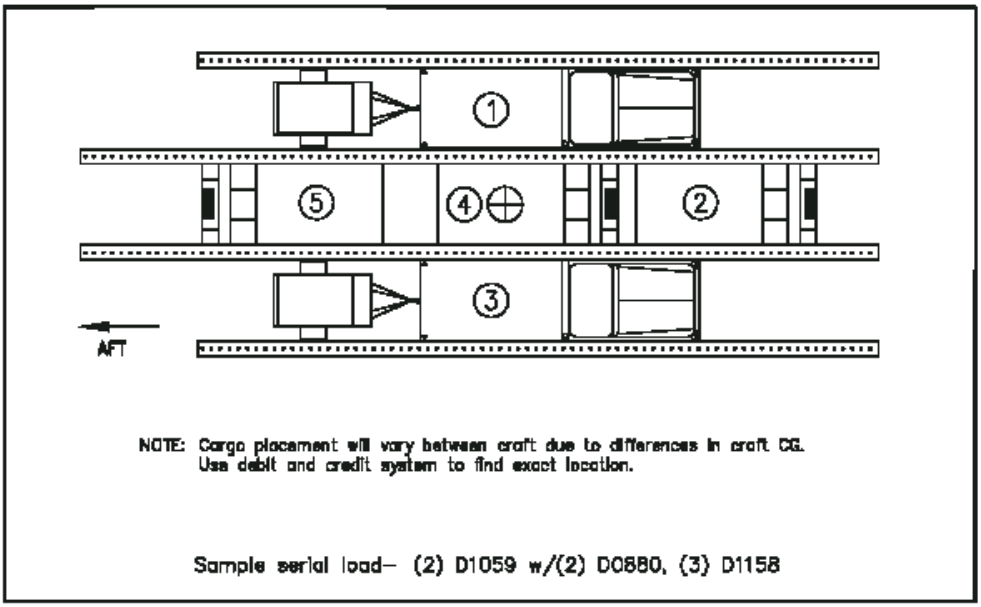

Figure 3-2 Sample Serial Load - (2) D1059 w/(2) D0880, (3) D1158

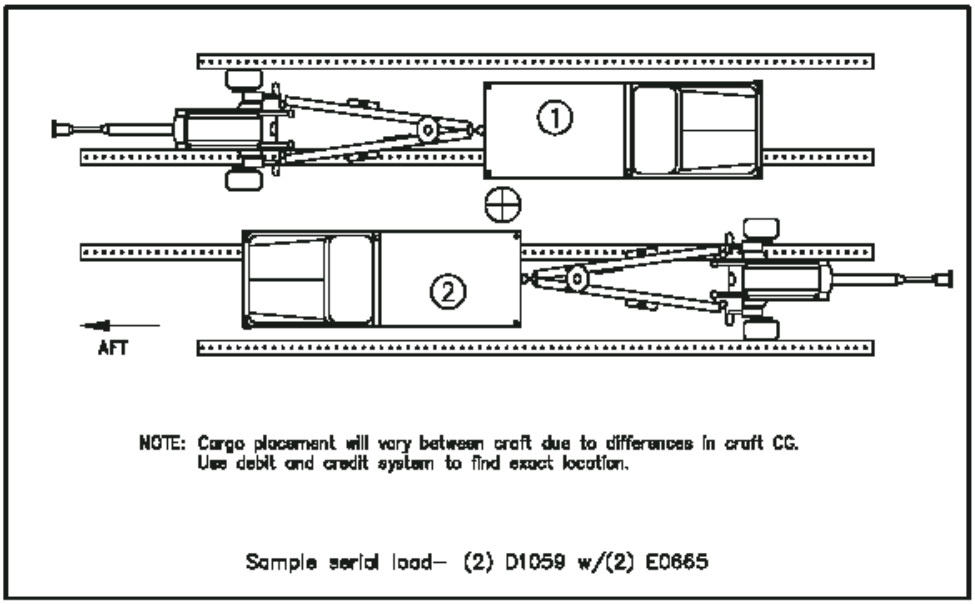

Figure 3-3 Sample Serial Load - (2) D1059 w/(2) E0665

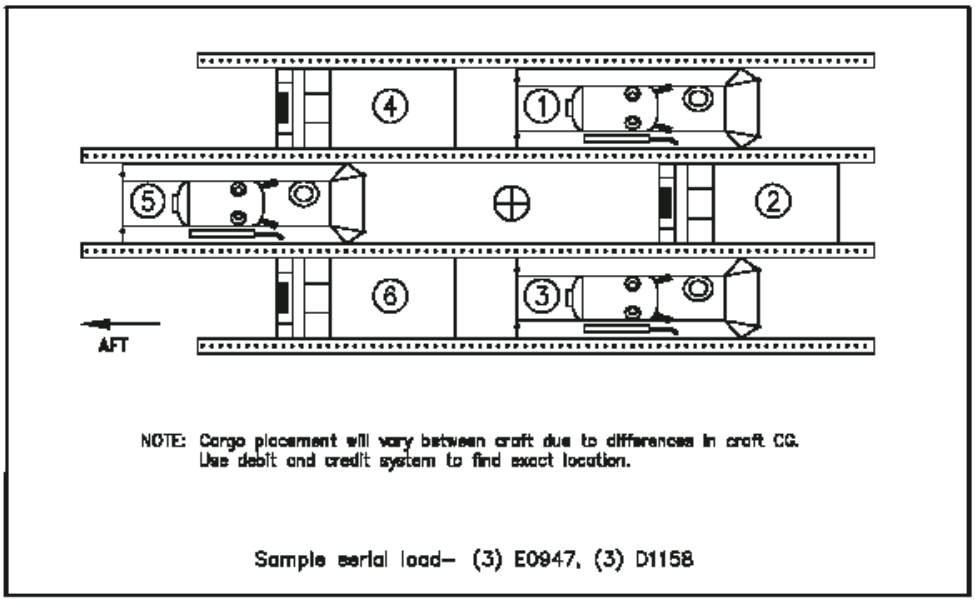

Figure 3-4 Sample Serial Load - (3) E0947, (3) D1158

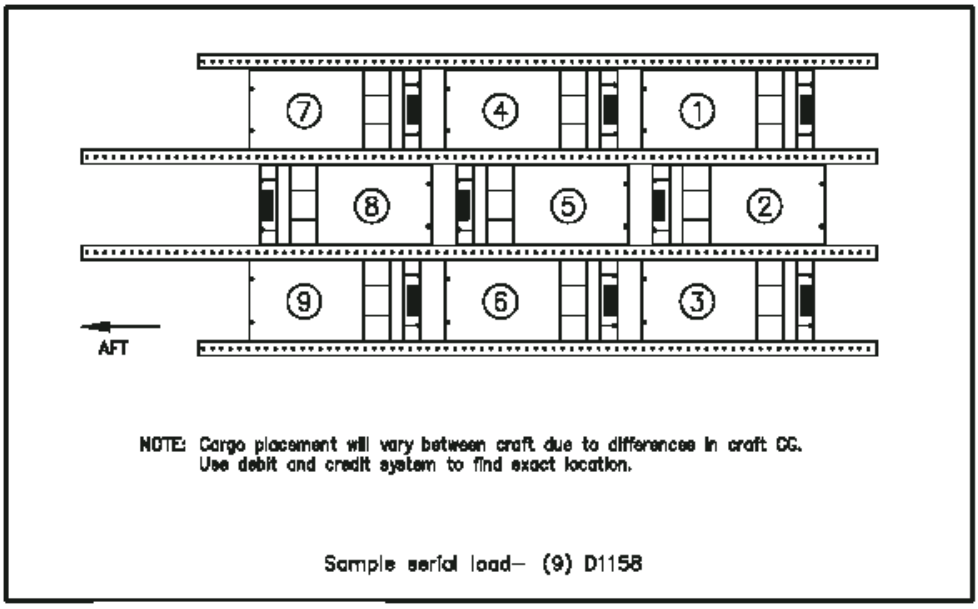

Figure 3-5 Sample Serial Load - (9) D1158