THIRD ANGLE PROJECTION

REVISIONS				
ZONE	REV	DESCRIPTION	DATE	APPROVED
5G 8D 8C 8A	A	REVISED WELD JOINT OF EXTRUSION BUTTS AUTH: ECR 7614-1650 REVISED WELD CALLOUT FOR FN 15 TO FN 12 AUTH: DCR 592 ADDED .75 X 2.0 SNIPE TO FN 44 AUTH: ECR 7614-1657	06/05/89	W H GRAY JR
7D 7E 7F 7E	B	1. ADDED FN45 & 46 REF CALLOUTS TO FC 2. ADDED SECTION J-J CALLOUT AUTH ECR 7614-1600D	08/24/89	IMPASTATO
4C 4C 6D	C	1. ADDED GRIND SMOOTH SYMBOL TO WELD SYMBOL. 2. ADDED CHAMFER TO FN 14 AUTH DCR 598A	03/21/90	A NEVILLE
2F F 6G	D	1. ADDED DETAIL L 2. ADDED NOTE 9, 10, & 11 TO VIEW A-A 3. LIMITED EFFECTIVITY OF FN 4, 5, 6, 8, & 22 4. ADDED FN 47 & 48 CALLOUTS AUTH: ECR 7614-1652	06/10/91	J COOK
	E	THIS SHEET NOT AFFECTED	08/02/91	L DOBSON
2C 2C 2B	F	1. ADDED FLAGNOTE #15 TO FN 30. 2. ADDED FN 50 WITH FLAGNOTE 16. 3. ADDED SECTION N-M. AUTH: ECR 7614-1781	04/09/92	G.BOSTICK
2C 1C	G	1. HOLE CALL OUT WAS: BORE 1.280 DIA HOLE USING .50 DIA PILOT 2. ADDED HOLE CALLOUT AUTH: ECR 7614-1838	10/15/93	DUPRAS
6F	H	1. ADDED WELD CALLOUTS FOR FN 32 AUTH: DCR 3797	04/25/94	DUPRAS
	J	THIS SHEET NOT AFFECTED	11/29/94	C.GARNER

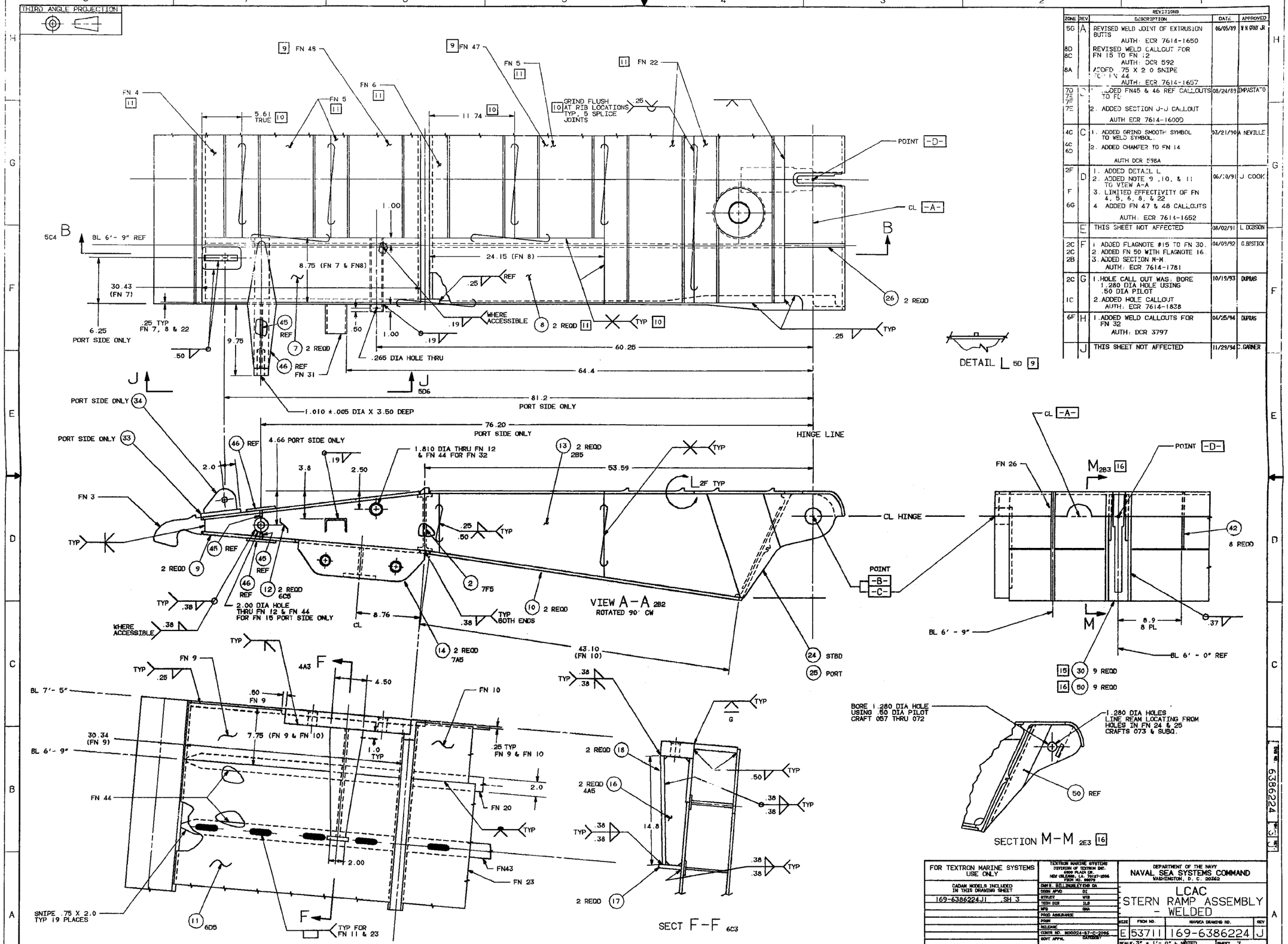

FOR TEXTRON MARINE SYSTEMS USE ONLY	TEXTRON MARINE SYSTEMS DIVISION OF TEXTRON INC. AVONDALE SHIPYARDS NEW ORLEANS, LA. 70127-2096 FSCM NO. 80073	DEPARTMENT OF THE NAVY NAVAL SEA SYSTEMS COMMAND WASHINGTON, D.C. 20362
CADAM MODELS INCLUDED IN THIS DRAWING SHEET 169-6386224J1 SH 3	DWN B.BILLINGSLEY/DB DA DSGN APVD DI STDLST WTB TECH DOC JLB MFG RWA PROD ASSURANCE PSNH RELEASE CONTR NO. N00024-87-C-2096 SDNT APPVL CONTROLLED	LCAC STERN RAMP ASSEMBLY - WELDED
		SIZE E · FSCM NO. 53711 · NAVSEA DRAWING NO. 169-6386224 · REV J
		SCALE: 3" = 1'- 0" & NOTED · SHEET 3

CADAM DWG 1

DWG NO. 6386224 REV. J