THIRD ANGLE PROJECTION

NOTES:

1. MARK PARTS PER MIL-STD-130, MARKING TO BE .18 HIGH.
2. CL -A- IS DEFINED AS A LINE PASSING THRU POINT -B- & POINT -C-. POINT -D- OF FN 37 SHALL BE COINCIDENT WITH CL -A- WITHIN .125.
3. ODD DASH NUMBERS SHOWN, EVEN DASH NUMBERS OPPOSITE.
4. FABRICATION, WELDING & INSPECTION PER NAVSEA 0900-LP-060-4010.
5. VENDOR ITEM - SEE SOURCE CONTROL DRAWING.
6. DIMENSION IS CRITICAL TO MAINTAIN RAMP REPLACEABILITY.
7. DRILL 1.810 ±.010 DIA HOLE AFTER RAMP ASSY IS COMPLETED AND PRIOR TO RAMP INSTALLATION.
8. ON RAMP INSTL, WITH RAMP IN THE UP POSITION, LOCATE CLEVIS, FN 14, TO ALIGN WITH PULLEY.
9. LAST SECTION OR VIEW USED: K
10. LAST DASH NUMBER USED IS: -057
11. EFFECTIVE CRAFTS 061 & SUBQ.
12. NO SEAM EFFECTIVE CRAFTS 061 & SUBQ.
13. EFFECTIVE CRAFTS 001 THRU 060.
14. EFFECTIVE CRAFTS 024 THRU 033 & 037 THRU 047 ONLY.
15. EFFECTIVE CRAFTS 048 AND SUBQ
16. EFFECTIVE CRAFTS 024 THRU 033, 037 THRU 048, & 052 THRU 060.
17. EFFECTIVE CRAFTS 024 THRU 033, 037 THRU 048, & 052 THRU 056.
18. EFFECTIVE CRAFTS 057 AND SUBQ.
19. EFFECTIVE CRAFTS 024 THRU 033, 037 THRU 048, & 052 THRU 077.
20. EFFECTIVE CRAFTS 078 AND SUBQ.

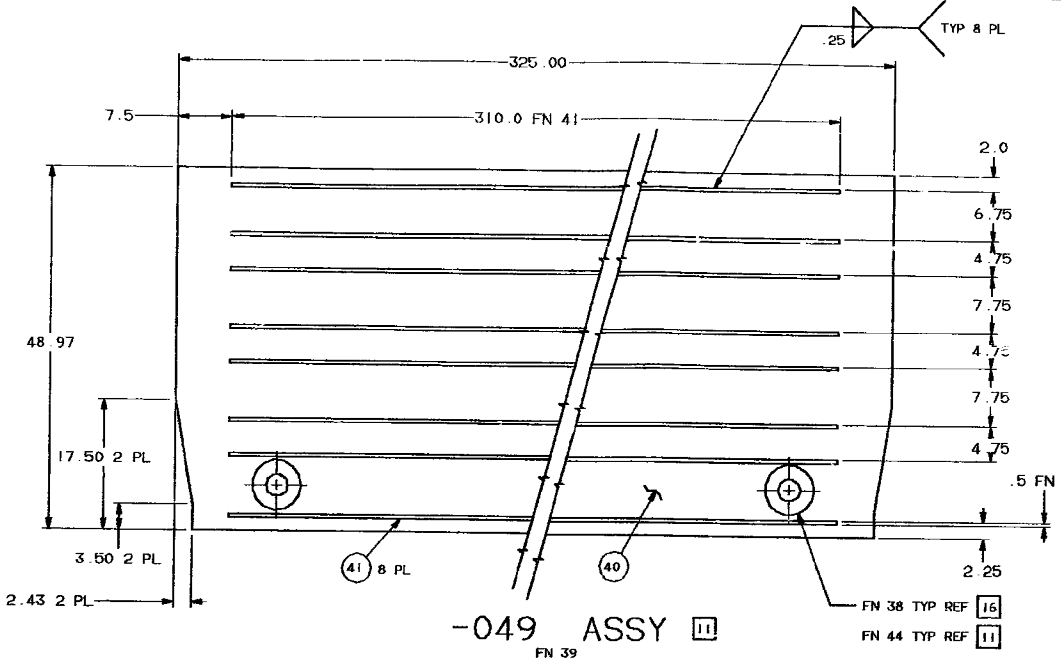

-049 ASSY [11]
FN 39

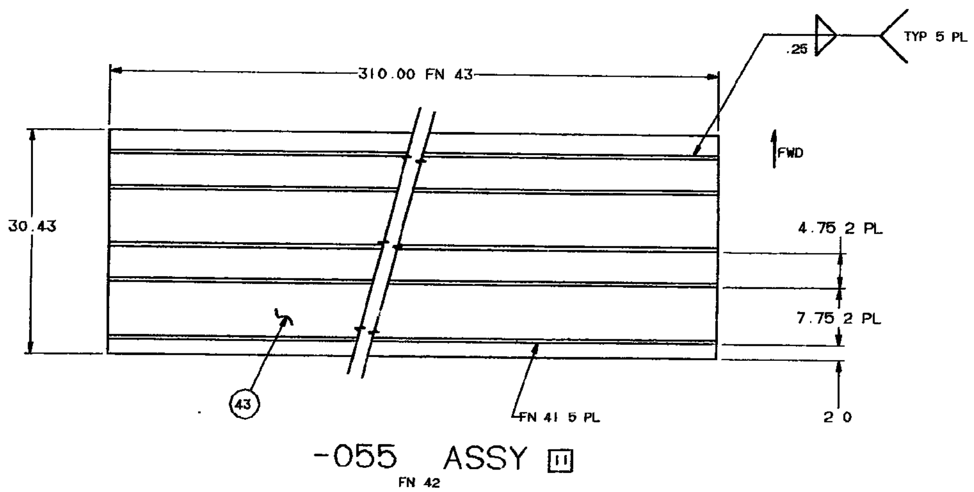

-055 ASSY [11]
FN 42

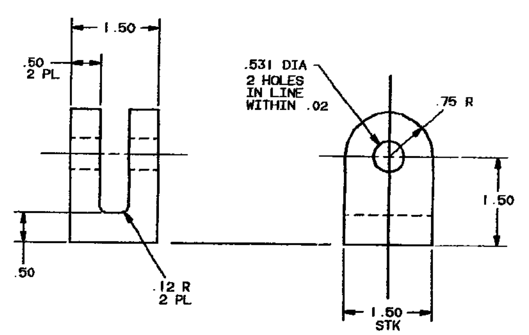

-027 FN 14

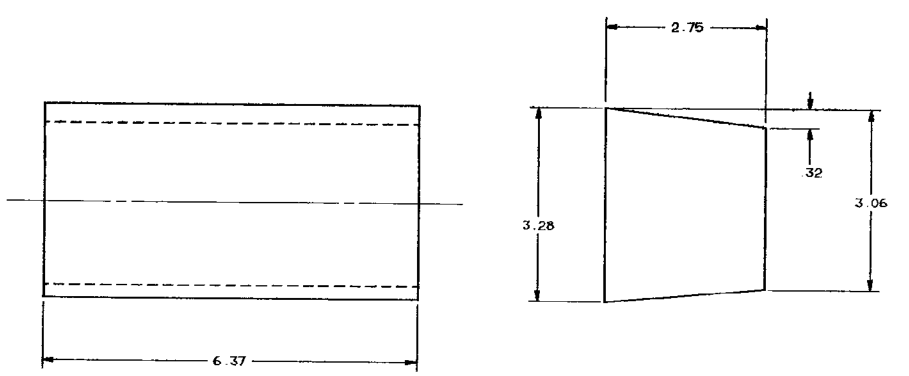

-007 FN 4

REVISIONS

ZONE	REV	DESCRIPTION	DATE	APPROVED
PL PL 8F	E	1. IN PARTS LIST ADDED FLAG -NOTE #17 TO FN 37. 2. ADDED FN 45 TO PARTS LIST. 3. ADDED NOTES #17 AND 18. 4. SEE SHEET #3. AUTH: ECR 7614-1781	04/09/92 04/14/92 04/14/92 04/14/92 04/15/92 04/16/92 04/16/92	G.BOSTICK DEVELCOURT WAGNER GIBSON HEMELT CATALANO CANTRELL
	F	1. REVISED SHEET 3 AUTH: ECR 7614-1838	10/19/93 11/16/93 11/16/93 11/16/93 11/17/93 11/17/93 11/17/93	D.UPRAS BILLINGSLY G.WAGNER H.CANTELLI S.TSCHIRN T.HEMELT B.HOUPY
P/L 8E P/L	G	1. ADDED FN 46 TO P/L. 2. FLAG NOTES 19 & 20 ADDED TO F/D. 3. FLAG NOTE 19 ADDED TO FN 29. 4. REVISED SH 2. AUTH: ECR 7614-1857 5. REVISED SH 3. AUTH: DCR NO. 3798	4/20/94 5/16/94 5/17/94 5/18/94 5/18/94 5/19/94 5/19/94 5/19/94	J.COOK IMPASTATO BILLINGSLY G.WAGNER H.FORSYTH S.TSCHIRN T HEMELT S.CANTRELL
8E	H	1. REVISED CRAFT EFFECTIVITY 2. CHGD NOTE 19 (WAS)024-033,037-048 & 052-075. 2. CHGD NOTE 20 (WAS)076 AND SUBQ AUTH: ECR 7614-1857A	6/14/94 6-21-94 6-21-94 6-23-94 6-23-94 6/24/94 6/29/94	RK deVALCOURT [signature] [signature] [signature] [signature] [signature] [signature]

REVISIONS

ZONE	REV	DESCRIPTION	DATE	APPROVED
		NEW DWG AUTH ECR 7614-1600A		
3A	A	IN APPLIC TION BLOCK: 1. A DED ... QTY FOR -001 2. EFFECTIVITY FOR -009 USAGE ON DWG 6386224 (WAS) 027 & SUBQ. AUTH: ECR 7614-1600B	2-13-89 2-13-89 2-13-89 2-13-89 2-13-89 2-13-89 2-13-89	M.DUDLEY R. WEAVER H. CANTELLI H. FORSYTH S. TSCHIRN T. HEMELT L. ROBINSON
3A 5G3 6G5 1B SH3 SH4	B	REVISED EFFECTIVITY OF -001 & -009 TO 024 & SUBQ. AUTH: ECR 7614-1640 & DCR 554A REVISED WELD JOINT ON EXTRUSION BUTTS AUTH: ECR 7614-1660 REVISED WELD SIZE: IS 35 WAS 50 AUTH: DCR 574 FN 7 THICKNESS (WAS) .500 AUTH: ECR 7614-1660 ADDED SNIPE FOR FN 5 REVISED AND ADDED WELD CALLOUTS AUTH: ECR 7614-1657	6-05-89 7-19-89 7-20-89 7-20-89 7-20-89 7-20-89 7-20-89	W N GRAY jr B.BILLINGSLY M.BARBIER H.CANTELLI J.MARKS T.HEMELT S.CANTRELL
8F PL PL 5D 5F 5D 5F	C	1. ADDED FLAG NOTES 11, 12 & 13 2. ADDED FLAG NOTE 13 TO FN'S 19 20, 22 & 25 3. ADDED FN'S 39 THRU 43 4. REV SH 2, 3 & 4 5. ADDED -055 ASSY TO FD 6. ADDED -049 TO FD AUTH: ECR 7614-1651A	06/12/91 06/27/91 06/27/91 07/08/91 07/09/91 07/16/91 07/16/91	J COOK R WEAVER E GRAFF R GIBSON S TSCHIRN T HEMELT S CANTRELL
8F PL 8F PL/4F M/4F	D	1. ADDED FLAG NOTES 14 & 15 2. REVISED SHEET 5 AUTH: ECR 7614-1748A 1. ADDED FLAG NOTE 16 2. ADDED FN 44 WITH FLAG NOTE 11 3. ADDED FLAG 16 TO FN 38 4. REVISED SHEET 2 AUTH: ECR 7614-5848	08/02/91 08/02/91 08/16/91 08/16/91 08/20/91 08/20/91 08/26/91 08/26/91	L DOBSON W.ADAMS R.WEAVER G.WAGNER R.GIBSON S.TSCHIRN T HEMELT S.CANTRELL

-055	-049	-009	-001	FIND NO.	FSCM NO	PART OR IDENTIFYING NO.	NOMENCLATURE OR DESCRIPTION	DRAWING OR SPECIFICATION	MATERIAL OR NOTE	DIA	THK	WD	LG	TS 1000 PSI	UNIT WT	ZONE
			2	46		5749311-009	OUTBOARD RIB		[20]							8A2
			17	45		6386445-001	HINGE ASSY		[18]							7B3
			5	44		5749962-013	BILGE CAP & ADAPTER		[5] [11]							6B2
1				43		6386223-057	TOP PLATING	ASTM B209	5456-H116 AL PL		.375	31.0	311.0			6D1
X			1	42		6386223-055	TOP PLATE ASSY		[11]							5D1
.5	8			41		6386223-053	TRACTION BAR	ASTM B209	5456-H116 AL PL		.500	.50	311.0			6F1
	1			40		6386223-051	TOP PLATING	ASTM B209	5456-H116 AL PL		.375	50.0	326.0			6F1
	X		1	39		6386223-049	TOP PLATE ASSY		[11]							5G1
			5	38		5749962-007	BILGE CAP & ADAPTER		[5] [16]							6B2
			17	37		5749318-001	HINGE ASSY		[17]							7B3
			21	36		5749316-007	RIB ASSY									3F2
			14	35		5749316-005	RIB ASSY									2F2
			1	34		5749313-008	TRANSVERSE BEAM									8B2
			1	33		5749313-007	TRANSVERSE BEAM									1B2
			1	32		5749313-005	TRANSVERSE BEAM									2B2
			2	31		5749312-029	TUBE									3D3
			18	30		5749312-007	GUSSET ASSY									7D3
			2	29		5749311-007	OUTBOARD RIB		[19]							6A2
			2	28		5749310-023	BOTTOM PLATING									8D4
			1	27		5749310-021	BOTTOM PLATING									8D4
			2	26		5749310-019	BOTTOM PLATING									4B3
			5	25		5749310-005	TOP PLATING		MF 5749294-001 [13]							7A2
			1	24		6386223-047	NOSE CAP EXTRN		MF 6386222-003				340.0			1D3
			1	23		-045	I-BEAM EXTRN		MF 6386222-001				340.0			3C3
			2	22		-043	TOP PLATING	ASTM B209	5456-H116 AL PL [13]		.375	8.0	50.0			1B2
			2	21		-041	TOP PLATING	ASTM B209	5456-H116 AL ALY PL		.375	7.0	50.0			1B2
			1	20		-039	TOP PLATING		MF 5749294-001 [13]				310.0			8C2
			1	19		-037	TOP PLATING		MF 5749294-001 [13]				310.0			7E2
			2	18		-035	TOP PLATING	ASTM B209	5456-H116 AL ALY PL		.500	5.0	7.0			1E2
			2	17		-033	TOP PLATING	ASTM B209	5456-H116 AL ALY PL		.500	7.0	24.0			1E2
			2	16		-031	TOP PLATING	ASTM B209	5456-H116 AL ALY PL		.500	8.0	31.0			1D2
			2	15		-029	CLOSURE PLATE	ASTM B209	5456-H116 AL ALY PL		.250	9.0	32.0			3C3
			2	14		-027	CLEVIS	ASTM B209	5456-H116 AL ALY PL		1.50	1.50	2.50			2D3
			2	13		-025	BOTTOM PLATING	ASTM B209	5456-H116 AL ALY PL		.500	7.0	31.0			8B4
			2	12		-023	BOTTOM PLATING	ASTM B209	5456-H116 AL ALY PL		.500	10.0	31.0			7B4
			2	11		-021	BOTTOM PLATING	ASTM B209	5456-H116 AL ALY PL		.375	31.0	55.0			6B4
			2	10		-019	BOTTOM PLATING	ASTM B209	5456-H116 AL ALY PL		.312	31.0	64.0			4B4
			1	9		-017	BOTTOM PLATING	ASTM B209	5456-H116 AL ALY PL		.250	[illegible]1.0	73.0			2B4
			2	8		-015	CLOSURE PLATE	ASTM B209	5456-H116 AL ALY PL		.250	15.0	57.0			1C2
		1		7		-013	RIB CAP	ASTM B209	5456-H116 AL ALY PL		.375	2.00	30.0			6G5
		1		6		-011	RIB WEB	ASTM B209	5456-H116 AL ALY PL		.500	8.0	31.0			6G5
		X	33	5		-009	RIB ASSY									4F2
			2	4		-007	BLOCK	ASTM B209	5456-H116 AL ALY PL		3.00	3.50	7.00			2D3
			2	3		-005	PAD,OUTBD RIB	ASTM B209	5456-H116 AL ALY PL		3.00	10.0	10.0			3D3
			2	2		-003	WEB,OUTBD RIB	ASTM B209	5456-H116 AL ALY PL		.750	7.0	21.0			2D3
			X	1		6386223-001	BOW RAMP ASSY									5A2

QTY REQD

PARTS LIST

DISTRIBUTION LIMITED TO DOD AND DOD CONTRACTORS ONLY; (CRITICAL TECHNOLOGY)
OTHER REQUESTS SHALL BE REFERRED TO THE NAVAL SEA SYSTEMS COMMAND, SEA 09B2

FOR TEXTRON MARINE SYSTEMS USE ONLY

CADAM MODELS INCLUDED IN THIS DRAWING SHEET

169-6386223H-1 SH 1

REF NO.	DRAWING OR SPECIFICATION	DESCRIPTION

REFERENCE DRAWINGS

HOLE TOLERANCES EXCEPT AS SHOWN

.040 TO .129	+.003 -.000
.130 TO .250	+.004 -.000
.251 TO .445	+.004 -.000
.446 TO .735	+.010 -.000
.736 TO .945	+.012 -.000
.946 AND ABOVE	+.020 -.010

DIM & TOL PER ANSI Y14.5

UNLESS OTHERWISE SPECIFIED DIMENSIONS ARE IN INCHES. TOLERANCES ON DECIMALS:

.X	.XX	.XXX	ANGLES
±.1	±.03	±.010	±2

UNLESS OTHERWISE SPECIFIED BREAK ALL SHARP EDGES APPROX .03 OR CHAMFER

MACHINE SURFACES EXCEPT AS NOTED N/A ✓

UNLESS OTHERWISE SPECIFIED FRACTIONAL TOLERANCE ± N/A

NUMBER	APPLICATION
NAVSEA 0900-LP-060-4010	FAB, WELD & INSPECT
MIL-STD-130	MARKING

APPLICABLE SPECIFICATIONS

DASH N	NEXT ASSY	USED ON	NEXT ASSY	FINAL ASSY
009	6386224	LCAC 024 & SUBQ	19	19
001	5749308	LCAC 024 & SUBQ	1	1

APPLICATION — QTY REQD

TEXTRON MARINE SYSTEMS
DIVISION OF TEXTRON INC.
6600 PLAZA DR.
NEW ORLEANS, LA. 70127-2096
12-23-88 FSCM NO. 50079

DWN M.DUDLEY 11/88 ENG OA H FORSYTH
DSGN APVD WEAVER DI H.FORSYTH
STRUCT WTS
TECH DIR N.A.J 1-24 ILS
MFG T.HEMELT 1-24 RMA
PROD ASSURANCE J.MARKS 1-26-89
PRGM
RELEASE S CANTRELL 1/25/89
CONTR NO. N00024-87-C-2096
GOVT APPVL. CATEGORY

DEPARTMENT OF THE NAVY
NAVAL SEA SYSTEMS COMMAND
WASHINGTON, D. C. 20362

LCAC BOW RAMP ASSEMBLY - WELDED

SIZE	FSCM NO	NAVSEA DRAWING NO.	REV
E	53711	169-6386223	H

SCALE: 12"=1'-0" SHEET 1 OF 5

CADAM DWG 1

DWG NO 6386223 SH 1 REV

2096E1