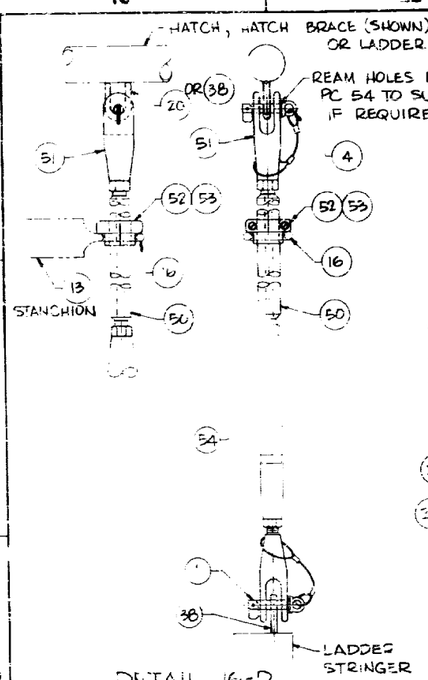

DETAIL 16-D
WIRE MANROPE ASSY
SCALE : NONE

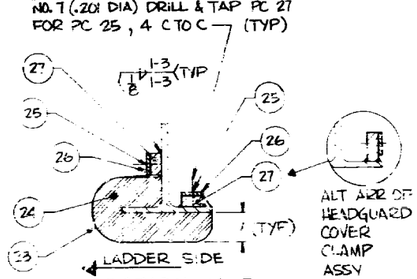

SECTION 14-D
HEAD GUARD INSTALLATION
SCALE : 1/2

NOTE : STRUCTURE TO BE PAINTED BEFORE MOUNTING HEAD GUARD. SECURE PADDING AT ENDS ; METHOD TO SUIT STRUCTURE.

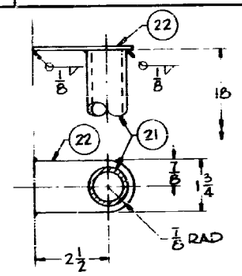

DETAIL 13-E
GRAB ROD ASSY
SCALE : 1/2

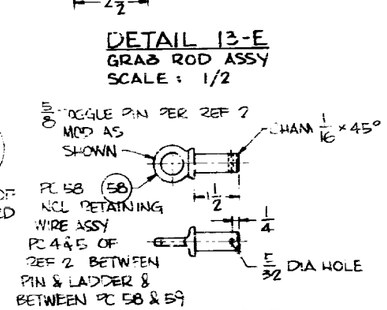

DETAIL 13-D
PIN
SCALE : 1/2

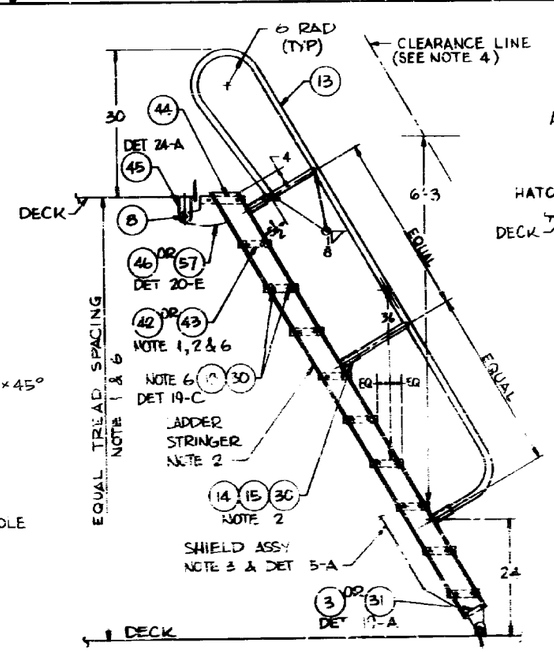

DETAIL 12-D
TYPE 4 LADDER
TYPE X HANDRAIL (NOTE 10)
SCALE : 1/12

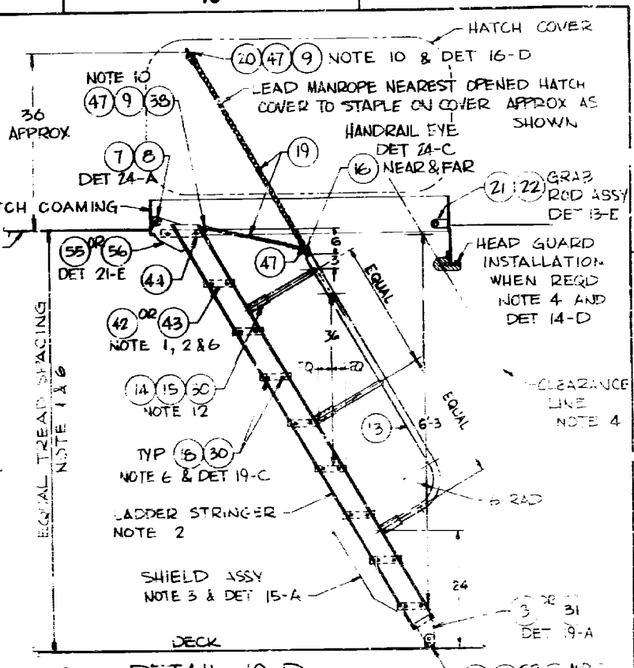

DETAIL 10-D
TYPE 2 LADDER
TYPE Y HANDRAIL (NOTE 10)
ARR FOR HATCH COVER HINGED ON LONG SIDE SHOWN
FOR COVERS HINGED ON SHORT SIDES SEE DET 13-A
SCALE : 1/12

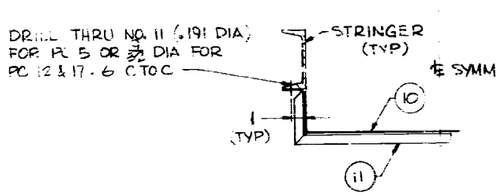

SECTION 15-C
LADDER SHIELD
SCALE : NONE

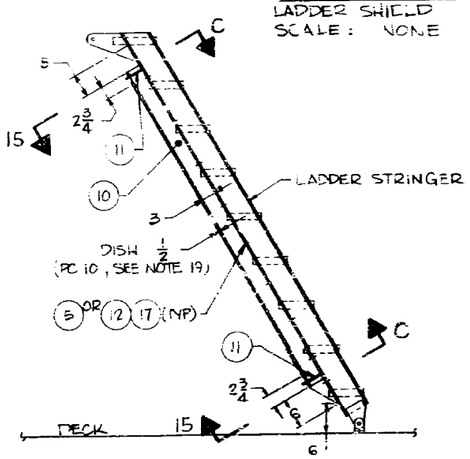

DETAIL 15-A
LADDER SHIELD ASSY
SCALE : 1/12

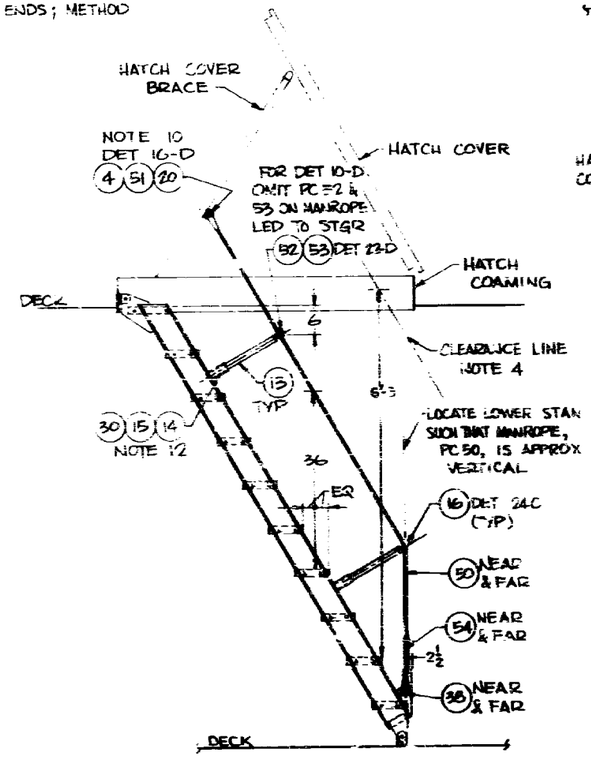

DETAIL 13-A
TYPE W HANDRAIL
ARR FOR HATCH COVER HINGED ON SHORT SIDE SHOWN. FOR COVERS HINGED ON LONG SIDES SEE DET 10-D
SCALE : 1/12

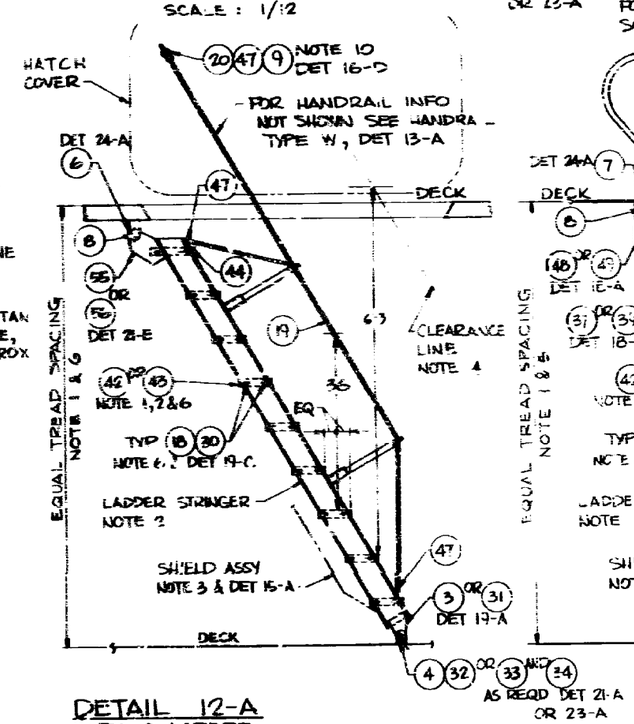

DETAIL 12-A
TYPE 3 LADDER
TYPE Z HANDRAIL (NOTE 10)
FOR ARR WITH HATCH COVER HINGED ON LONG SIDE (SHOWN) SEE DETAIL 13-A
FOR ARR WITH HATCH COVER HINGED ON SHORT SIDE SEE DETAIL 10-D
SCALE : 1/12

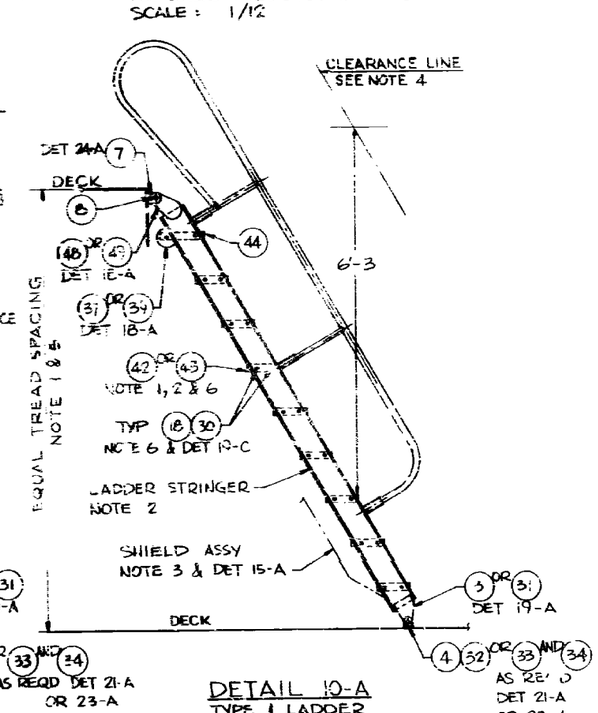

DETAIL 10-A
TYPE 1 LADDER
TYPE X HANDRAIL (DET 12-D)
SCALE : 1/12

DEPARTMENT OF THE NAVY NAVAL SEA SYSTEMS COMMAND WASHINGTON, D.C. 20362	SIZE F	FSCM NO 80064	SYMBOL 804	DRAWING NO 1743113	REV D
DRAWN 6/8/82	SCALE 1/12			SHEET 2	
ISSUED					