AD/A-003 222

# PLASTIC 5.56mm BLANK CARTRIDGE

Neal C. Wogsland

Army Land Warfare Laboratory
Aberdeen Proving Ground, Maryland

June 1974

DISTRIBUTED BY:

NTIS
National Technical Information Service
U. S. DEPARTMENT OF COMMERCE

UNCLASSIFIED
SECURITY CLASSIFICATION OF THIS PAGE (When Data Entered)

| REPORT DOCUMENTATION PAGE | | READ INSTRUCTIONS BEFORE COMPLETING FORM |
|---|---|---|
| 1. REPORT NUMBER<br>TECHNICAL REPORT NO. 74-31 | 2. GOVT ACCESSION NO. | 3. RECIPIENT'S CATALOG NUMBER<br>AD/A-003 222 |
| 4. TITLE (and Subtitle)<br>PLASTIC 5.56mm BLANK CARTRIDGE | | 5. TYPE OF REPORT & PERIOD COVERED<br>Final Report<br>6. PERFORMING ORG. REPORT NUMBER |
| 7. AUTHOR(s)<br>Neal C. Wogsland | | 8. CONTRACT OR GRANT NUMBER(s) |
| 9. PERFORMING ORGANIZATION NAME AND ADDRESS<br>US Army Land Warfare Laboratory<br>Aberdeen Proving Ground, MD 21005 | | 10. PROGRAM ELEMENT, PROJECT, TASK AREA & WORK UNIT NUMBERS<br>LWL Task 02-F-72 |
| 11. CONTROLLING OFFICE NAME AND ADDRESS | | 12. REPORT DATE<br>June 1974<br>13. NUMBER OF PAGES |
| 14. MONITORING AGENCY NAME & ADDRESS(if different from Controlling Office) | | 15. SECURITY CLASS. (of this report)<br>Unclassified<br>15a. DECLASSIFICATION/DOWNGRADING SCHEDULE |

16. DISTRIBUTION STATEMENT (of this Report)

APPROVED FOR PUBLIC RELEASE; DISTRIBUTION UNLIMITED

17. DISTRIBUTION STATEMENT (of the abstract entered in Block 20, if different from Report)

18. SUPPLEMENTARY NOTES

19. KEY WORDS (Continue on reverse side if necessary and identify by block number)

Plastic
5.56mm
Blank
Cartridge
Ammunition
Training

Reproduced by
NATIONAL TECHNICAL
INFORMATION SERVICE
U S Department of Commerce
Springfield VA 22151

20. ABSTRACT (Continue on reverse side if necessary and identify by block number)

An expendable plastic 5.56mm blank cartridge for the M16A1 rifle has been developed and tested successfully. The prototype cartridge cases were molded in a 4-cavity production-type mold to insure that the tested cartridges would be produceable in quantity without sacrificing quality. This cartridge performs satisfactorily in the semiautomatic mode of fire and operates the rifle reliably in the fully automatic mode when using the standard blank firing attachment (.063-inch orifice). This blank cartridge will outperform the M200 blank cartridge in feeding and equals its other performance characteristics.

DD FORM 1 JAN 73 1473 EDITION OF 1 NOV 65 IS OBSOLETE

Pages i and ii are blank

UNCLASSIFIED
 SECURITY CLASSIFICATION OF THIS PAGE (When Data Entered)

## ACKNOWLEDGEMENTS

The author acknowledges the effort expended by personnel of AAI Corporation, Cockeysville, MD, in the development of the plastic 5.56mm blank cartridge... especially Messrs. Mitchell G. Angelos, Robert W. Schnepfe, and Omer L. Shifflett. The development effort was conducted under Contract No. DAAD05-72-C-0120.

**Preceding page blank**

TABLE OF CONTENTS


| | Page |
|---|---|
| REPORT DOCUMENTATION PAGE | iii |
| ACKNOWLEDGEMENTS | v |
| INTRODUCTION | 1 |
| DESCRIPTION | 2 |
| DEVELOPMENT HISTORY | 4 |
| CONCLUSIONS | 23 |
| APPENDIX | 25 |
| DISTRIBUTION LIST | 29 |

## INTRODUCTION

The purpose of this task was to develop a plastic 5.56mm blank cartridge that would provide a suitable replacement for the standard 5.56mm blank cartridge M200. The case of the M200 cartridge is fabricated from brass, which is a critical material, and consequently expended cases presently must be salvaged. In addition to eliminating the need for salvaging spent brass, a lower production cost per round would provide additional cost savings. The political atmosphere also could be improved in some areas because plastic cartridges would eliminate the temptation for local civilians to illegally enter firing ranges to collect brass, a practice which has led to injuries and deaths.

An unsolicited proposal was received in the Spring of 1971 from the AAI Corporation which differed significantly from other approaches that had been reported in the literature on this subject. The suggestion was evaluated and a specific military need was identified. The unsolicited proposal was discussed with personnel at Frankford Arsenal and it was agreed that LWL should initiate a task, Plastic 5.56mm Blank Cartridge, LWL Task 02-F-72. A list of Military Characteristics was prepared (Appendix) to provide design and performance goals. Contract No. DAAD05-72-C-0120 was awarded to AAI Corporation, Cockeysville, MD 21030, in November, 1971 to develop their proposal and it was later supplemented to provide for the fabrication of a quantity of cartridges for engineering design tests and field evaluation. Technical Note No. LWL-CR-02F72A, Development of Plastic 5.56mm Blank Cartridge, by R. W. Schnepfe and O. L. Shifflett, presented a summary of the contractor's development effort. Another report, Technical Note No. LWL-CR-02F72, Production Cost Analysis for Plastic 5.56mm Blank Cartridge, by F. C. Weegar, was prepared by AAI Corporation under Work Assignment No. 1, Contract No. DAAD05-73-C-0214. Both technical notes are filed in the official task folder at the Records Holding Area at Aberdeen Proving Ground and a copy of each was distributed to the US Army Armament Command (AMSAR-RDG), to Frankford Arsenal (SMUFA-MDS-S), and to the Aberdeen Proving Ground Technical Library (STEAP-TL).

This report presents a summary of the development efforts and the engineering design tests that were conducted. It became necessary to curtail the fabrication of test quantities and the testing because of the disestablishment of LWL on 30 June 1974. Sample quantities were forwarded to Frankford Arsenal, Philadelphia, PA, for use in possible future development testing, and to the Combat Arms Training Board, Fort Benning, GA, for a limited user evaluation. The task project folder has been retired to the Records Holding Area at Aberdeen Proving Ground and key data has been forwarded to the AMC Parent Agency for this task, the US Army Armament Command. Their assigned point of contact is Mr. Larry Moore, office symbol AMSAR-RDG, US Army Armament Command, Rock Island, IL 61201.

## DESCRIPTION

The plastic 5.56mm blank cartridge is white in color and closely resembles the configuration of standard ball ammunition; in contrast, the standard M200 cartridge is stub-nosed (Figure 1). This improved configuration insures

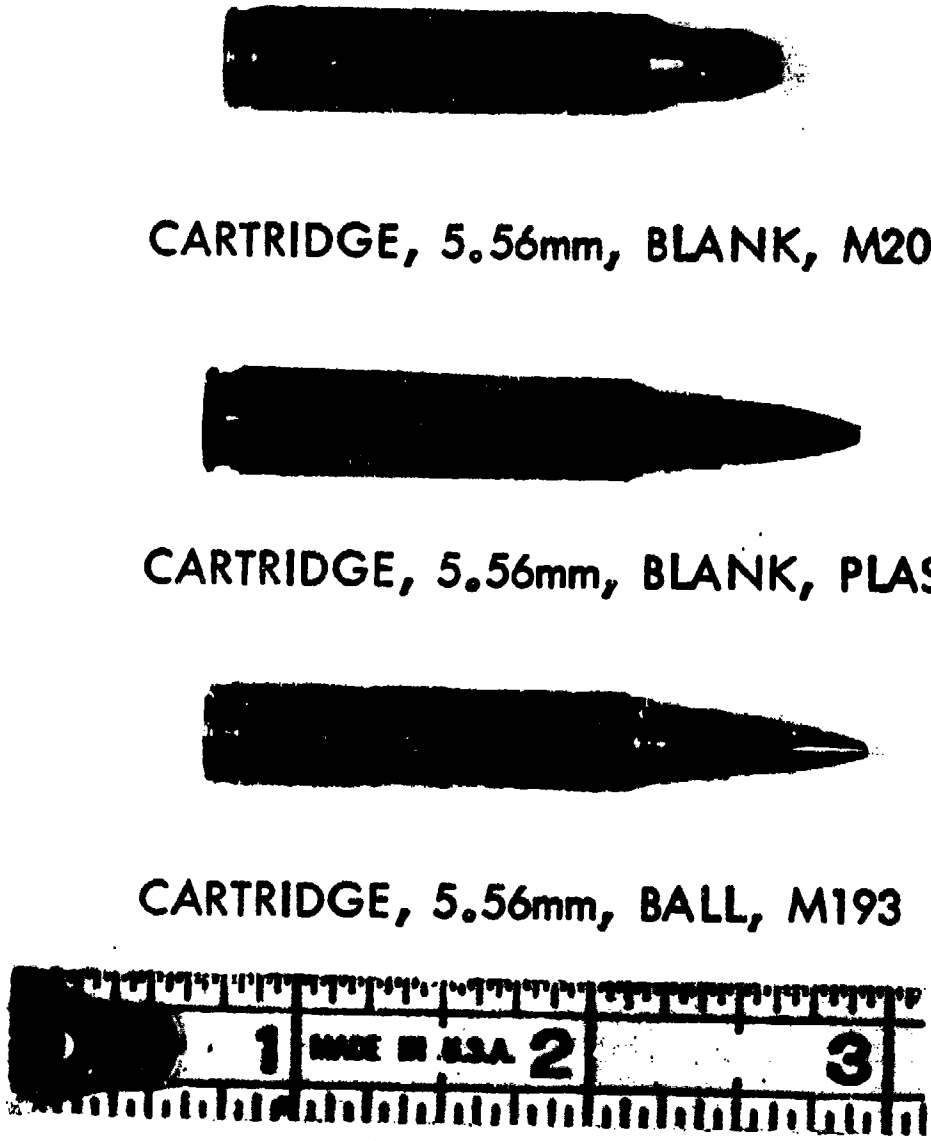


FIGURE 1. Plastic 5.56mm Blank Cartridge with Standard Cartridges.

consistent feeding when used with both 20-round and 30-round magazines in the M16A1 Rifle. The cartridge contains 8-1/2 grains of ball propellant (Olin Corporation No. WC820). A No. 1-1/2 primer, supported by a primer housing, is installed in the head end of the cartridge. A .043-inch hole in the nose is sealed by an RTV sealant. The external wall of the ogive has four equally-spaced grooves to encourage opening in petal-like segments when internal pressure develops after the cartridge is fired. The cavity in the ogive end is slightly off center to encourage rupture at a specific weak point; this minimizes the possibility of losing one of the petals during firing. A cutaway of the cartridge is shown in Figure 2.

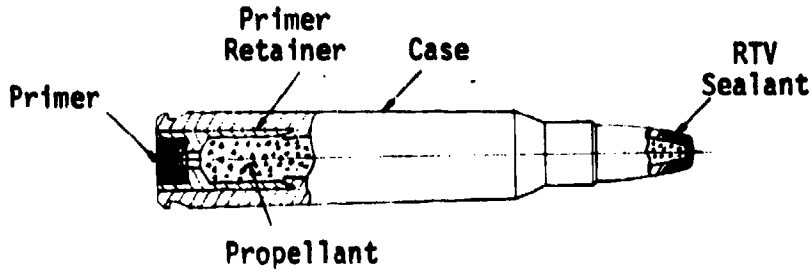


FIGURE 2. Cutaway of Plastic 5.56mm Blank Cartridge

When the plastic 5.56mm blank cartridge is fired in the M16A1 rifle, the percussion primer ignites the propellant. When the pressure in the cartridge exceeds the strength of the weakest point of the ogive, the cartridge ruptures and releases the combustion gases into the barrel of the gun, from where they exhaust through the muzzle. If the muzzle is blocked by the standard blank firing attachment M15A2 (BFA), pressure in the barrel builds up sufficiently to cycle the weapon, extracting the fired cartridge and automatically reloading (and firing again if the rate selector is set in the automatic mode). Excess pressure bleeds off through a vent in the BFA (.063-inch standard orifice) with some gas exhausting at the breech upon extraction of the spent case.

## DEVELOPMENT HISTORY

### Initial Cartridge Design

The initial external configuration was based on that of the standard 5.56mm ball cartridge M193. The one-piece plastic case (Figure 3) was molded with a bullet-shaped nose and an overall length of approximately 2.25 inches to best simulate the feeding characteristics of the ball ammunition. The nose contained four grooves to provide weak lines along which the nose would peel open after firing; the gases would then escape into the barrel while the resultant petals would remain attached to the case.

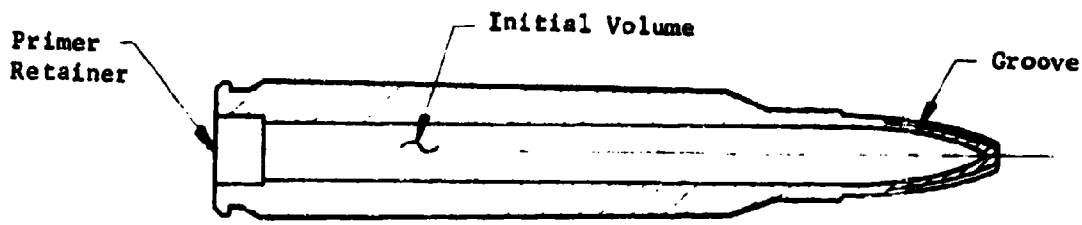


FIGURE 3. Initial Case Design for Plastic 5.56mm Blank Cartridge

Detailed drawings were not immediately available, so several M200 blank cartridges were disassembled to obtain information on internal volume and propellant weight and volume. The M200 contained 7 grains of Hercules HPC-13 propellant with a volume of approximately 0.7 cc. Since it is necessary for the wall of the plastic case to be much thicker than with brass, an internal volume of slightly over 0.7 cc was selected. For this, a 0.154-inch diameter cavity was needed. A No. 6-1/2 percussion primer was selected and a primer retainer was required because the cavity was the same size as the primer and, therefore, the primer could not be restrained adequately otherwise.

### Initial Hand-Operated Mold

A simple double-gated hand-operated mold was designed for use in a small injection molding machine. The basic mold consisted of a core, a cavity block, an ogive insert, and a split head section. The use of the brass ogive insert permitted modifications to be made easily and cheaply. The head section formed the extractor groove and consequently was split to permit removal of the molded cartridge case. Plastic injection into the cavity was through two gates located in the head section parallel to the case centerline. The core, which formed the internal cavity of the case, was inserted from the head end so that the bullet-shaped ogive could be molded with a closed end. The primer retainer pocket also was molded without subsequent

machining. Gating at the thicker-wall-sectioned head end provides for more consistent parts since the best filling of a mold is accomplished by moving the material from the thicker to the thinner sections.

Development of Initial Hand-Operated Model

The first cartridge cases were molded from 43% glass-filled 612 nylon and unfilled 612 nylon because of its successful application for other cartridge case development programs. These cases were loaded with 7.0 grains of HPC-13 propellant and a No. 6-1/2 primer. A Mann barrel was used for the initial tests to study case integrity. The unfilled cases were extremely difficult to remove from the barrel so they were withdrawn from further tests. All of the cases cracked longitudinally (Figure 4); each case having two cracks, 180° apart, located along the weld lines in the material which occur during molding where the material entering through the two gates fuse to form two slightly visible lines. These weld lines usually are weaker than the rest of the part. In addition to the cracks, the primer of each fired case was depressed into its pocket about .030 inch by the force imparted by the firing pin. This probably resulted from insufficient radial support of the rear of the case by the chamber of the barrel. It appeared that the entire case was undersize; therefore, the case expanded beyond the material's limits before being restrained by the chamber walls.

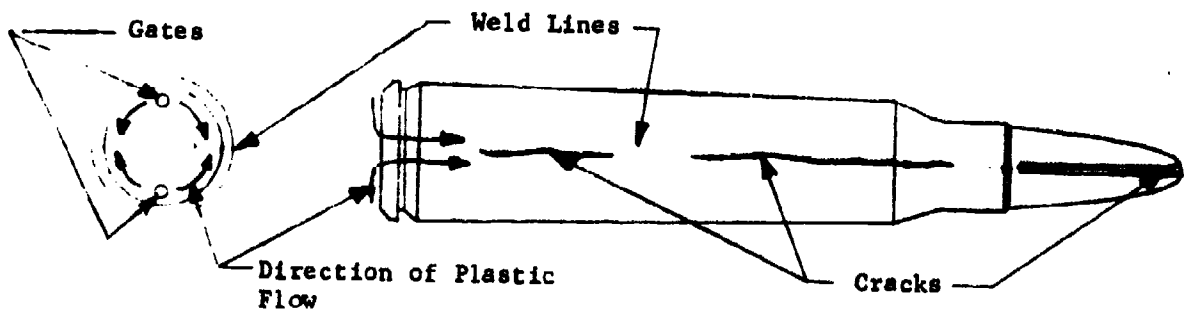


FIGURE 4. Longitudinal Cracking of Plastic Cartridge Case

To reduce this expansion, the mold cavity was enlarged. This produced a significant reduction in the cracking. During these same tests, it was observed that propellant burning was incomplete. The ogive was thickened from .015-inch wall to .030-inch wall so that case rupture would not occur until more of the propellant had ignited. Since the pressure rise was much faster than that of the M200 cartridge, the internal volume was increased 50% by enlarging the inside diameter to 0.189 inch. A larger primer (No. 2-1/2) was then used, eliminating the need for a primer retainer.

Subsequent Mann barrel firings showed that the time to reach peak pressure had been doubled, but it was still faster than the M200.

Cases of this design were molded using 43% and 50% glass-filled nylon and 10% glass-filled polycarbonate. These cartridges were fired in the M16A1 rifle. Overall results with the nylon were poor; all failed structurally and only a small number extracted and ejected properly. The principal deficiencies were the high incidence of longitudinal cracks and the numerous ogive separations (Figure 5). No cracks were observed with the polycarbonate, but all of the cases experienced ogive separation. It was obvious that the 0.189-inch inside diameter had been extended too close to the nose, thereby creating a new unwanted weak section.

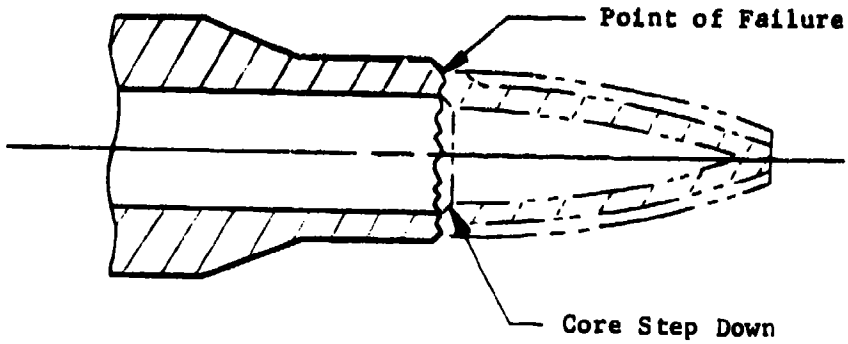


FIGURE 5. Nose (Ogive) Separation

The mold was modified to provide deeper grooves in the ogive and the core was modified to provide a stronger section where the separation had occurred. Six cartridges were made using 10% glass-filled polycarbonate; they were loaded with 7 grains of HPC-13 propellant. They were test fired from an M16A1 rifle ... 2 in the semiautomatic mode, 2 automatic at ambient temperature and 2 automatic at +165°F. In each of these firings, the weapon cycled and the cases were extracted and ejected normally. In another series of tests, cartridges made from 40% glass-filled polyurethane yielded poor results with failure to cycle the weapon and extensive case cracking. Since some cracking had occurred with the polycarbonate cases, two more gates were added at the base of the mold in an effort to change the material flow characteristics and to reduce the effect of the weld lines. However, 4 weld lines then occurred and cracking occurred, as before, along the weld lines when the cartridge was tested. At this point in the program, it was decided that a single cavity automatic type mold should be fabricated since the initial mold had to be disassembled after molding each cartridge case.

Development Using Single-Cavity Automatic Type Mold

A single-cavity automatic type mold was designed and fabricated (Figure 6). It incorporated a double-gating feature with the material entering the cavity from two sides at locations just forward of the extraction groove. With

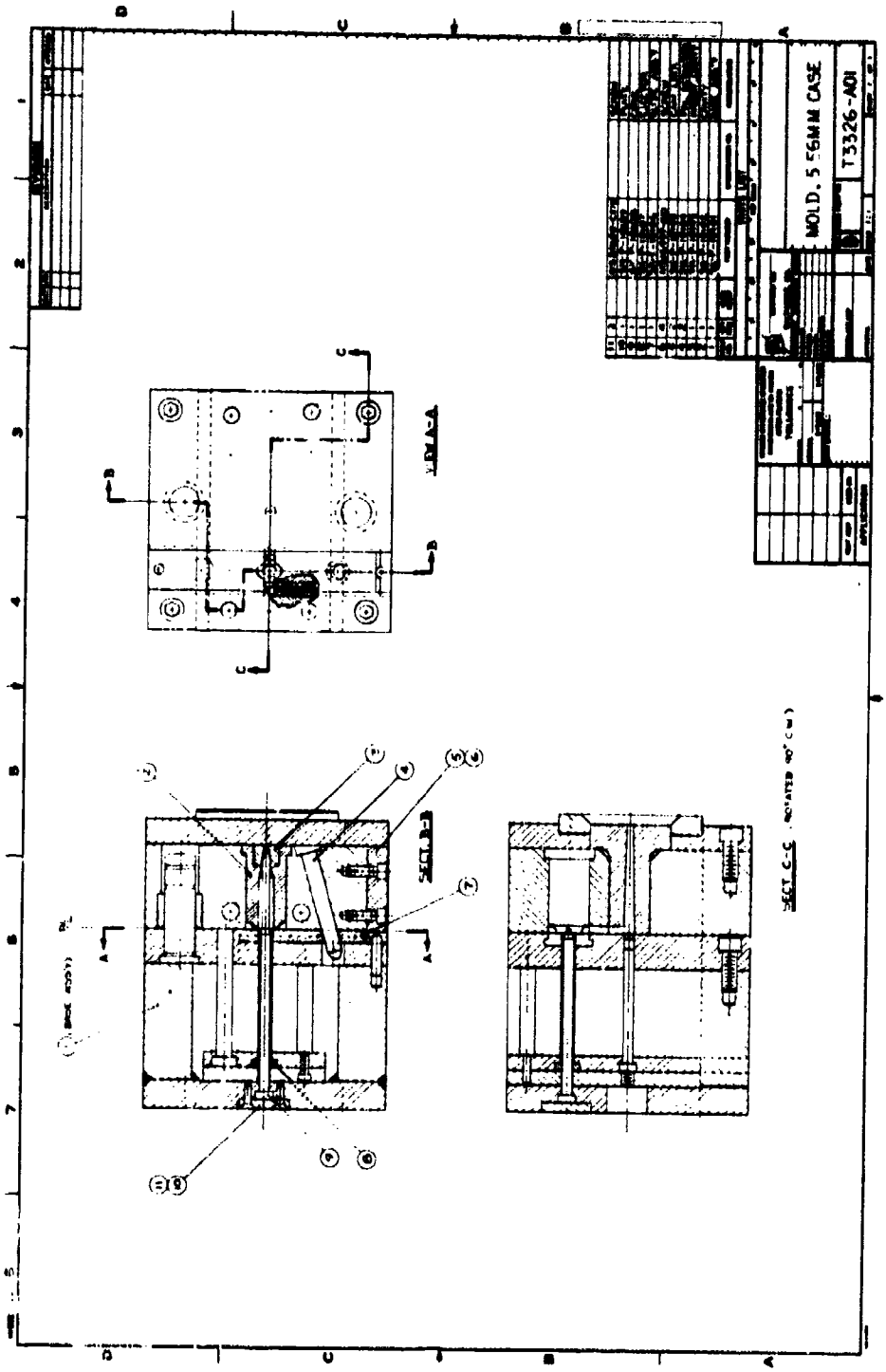


FIGURE 6. Single-Cavity Production-Type Mold

this new mold, cases were molded from 33%, 43%, and 50% glass-filled 612 nylon, 10% glass-filled polycarbonate, and 40% glass-filled polyurethane. All materials molded easily except the polyurethane, which proved difficult to extract from the mold. A decision was made to drop the consideration of polyurethane, at least temporarily, because it appeared that extensive mold modifications would be required.

Cartridges made from the other four materials were tested in the M16A1 rifle. All of the nylon cases cracked longitudinally and did not extract, but there was no sign of damage to the polycarbonate cases after firing, extracting, and ejecting normally. Testing of 612 nylon continued after molding additional cases with 20%, 10%, and 0% glass. These firings also were unsuccessful as all cases failed to extract and eject. However, the severity of the cracking appeared to diminish as the glass content was reduced. Another persistent problem with the nylon blank cartridges was the separation of one or more petals from the ogive at firing. This is undesirable because there is a possibility that the broken piece may block the exhaust port of the blank firing attachment (BFA). A dimensional check of the cases showed them to be undersize and therefore the mold cavity was enlarged to make the cases closer to the chamber dimensions of the M16A1 rifle. In an effort to eliminate the nose fragmentation, a blunt nose was designed with a thin forward wall (Figure 7). Cartridges were then made and tested using 50%, 33%, and 20% glass-filled 612 nylon; 10% and 0% glass-filled polycarbonate; type 66 nylon/molybdenum disulfide; and 30% glass-filled polyester. During testing of these cartridges, the nylons and the polyester were unsatisfactory, exhibiting extensive longitudinal cracking with numerous failures to cycle the rifle. Case breakup occurred with the type 66 nylon. The two polycarbonates produced more favorable results with full cycling of the weapon occurring on most rounds. Rate measurements at full automatic and pressure vs. time measurements compared quite well with the standard M200 blank cartridge. However, small cracks did appear in the extractor groove area of many of these cartridges. It became apparent that the plastic alone could not withstand the internal pressure (4200 psi) at the unsupported extractor groove, where the wall is fairly thin because of the primer pocket alongside.

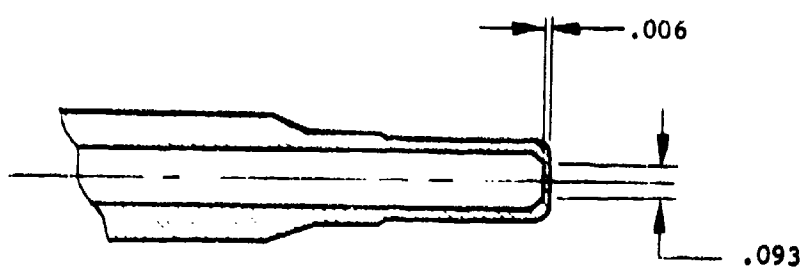


FIGURE 7. Blunt-Nose Design

Metal primer retainers were made to support this area. Both steel and aluminum retainers produced satisfactory results with the unfilled polycarbonate case. Additional experiments were conducted with the wall thickness at the nose and then 70 cartridges were fabricated and delivered to LWL for evaluation (Figure 8). These were loaded with 7.5 grains of WC 370 propellant and contained No. 1-1/2 primers mounted in aluminum primer housings. Several 10-round and 20-round bursts had been fired at AAI for a total of 78 rounds out of which two failed to eject, one nose separation occurred, and two cracks were observed on cases that cycled the gun properly. During these tests, the BFA had a .043" orifice. However, during the LWL testing, 30% nose separations occurred, the first round in a fully-loaded 20-round magazine stubbed during feeding, and several extraction/ejection failures occurred.

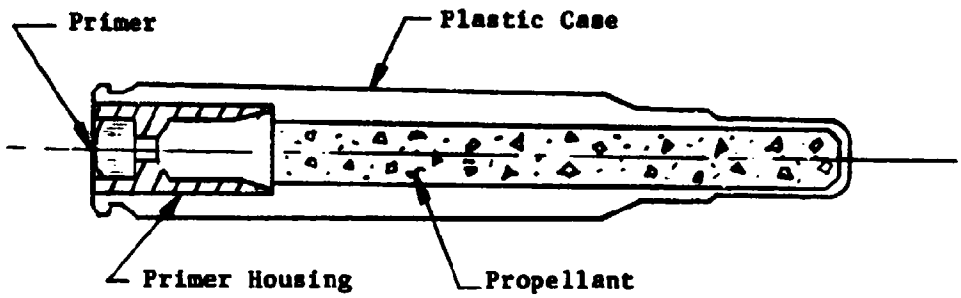


FIGURE 8. Cutaway of Blunt-Nose Plastic 5.56mm Blank Cartridge

Following the above tests, LWL provided AAI with several additional M16A1 rifles and a quantity of 20-round magazines so that numerous combinations could be tested to insure that observed results could be repeated with other weapons and magazines. In addition, several of the newly developed 30-round magazines and several new BFA's were obtained and furnished. Improvements were achieved by making another mold change to improve cartridge case support in the area where the nose separations were occurring, by drilling a small hole in the tip of the case and then sealing it with RTV sealant to induce rupture at that point, and by scoring the tip to promote rupture propagation along the score lines. The scoring produced the most significant improvement. To nullify the stubbing problem during the feeding operation, a mold change was made to again incorporate an ogive. One problem in the past had been the uneven thicknesses of the ogive wall that occurred because the core was not supported at the nose end during molding. This condition was solved by extending the tip of the core forward to the mold cavity insert, thereby obtaining positive support for the core. The resultant hole in the nose (Figure 9) was subsequently closed using RTV sealant. After these modifications were completed, three fully loaded magazines were fired (60 rounds) without a single failure, including no evidence of cracks and no nose or petal separations. This test was repeated, 60 additional cartridges, with

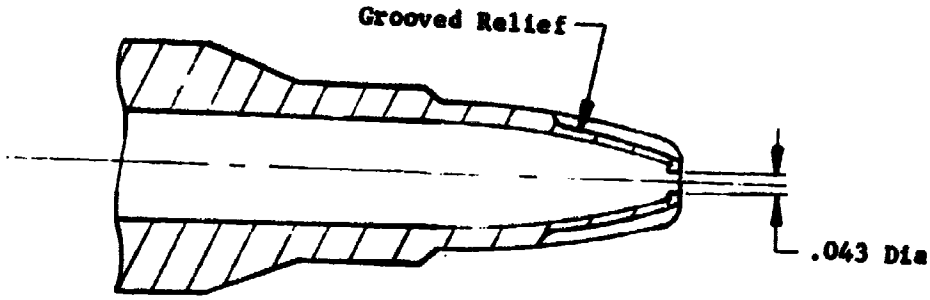


FIGURE 9. Modified Ogive

equally good performance. The charge for these blanks was 7.0 grains of WC-370 propellant. Three other propellants were also tried and WC-520M did appear to perform as well as WC-370.

At this point, evaluation of the performance of these cartridges made from unfilled polycarbonate (Lexan 191) at various temperatures was conducted. They again were loaded with 7.0 grains of WC-370 propellant. The rifle and the ammunition were conditioned for four hours at the desired temperature just prior to firing. The results were as follows:

TABLE I. Evaluation of Plastic 5.56mm Blank Cartridges with Lexan 191 Polycarbonate Cases at Various Temperatures

| Temp. °F | Rounds Fired | Cracks Major | Cracks Minor | Nose Lost | Petal Lost | Short Cycle | Feed Jam | Failed to Fire | Burst Lengths |
|---|---|---|---|---|---|---|---|---|---|
| - 25 | 33 | 0 | 10 | 0 | 2 | 9 | 0 | 1 | 5*,3,6,11* |
| - 65 | 5 | 0 | 1 | 1 | 2 | 5 | 0 | 0 | -- |
| +125 | 25 | 0 | 3 | 0 | 0 | 0 | 0 | 0 | 5*,20* |
| +165 | 2 | 2(?) | 0 | 0 | 0 | 0 | 0 | 1 | 2 |

Two bursts fired out satisfactorily at -25°F, but nine other attempts failed because of short cycles, either failures to extract and eject or cycles too short to pick up the following round from the magazine. The M16A1 rifle's selector was set for automatic fire for this entire series of firings. The cartridges operated the rifle satisfactorily at +125°F, but firing stopped after two rounds at +165°F and could not be restarted; the weapon was inoperative but the cause was not recorded. The cracks in the walls of the cartridge cases after firing at +165° were more significant than observed in the other firings of this test, but they did not stop the rifle from cycling. (Note: These tests do not represent the final prototype, neither the final

dimensions nor the final propellant, but they indicate the worst that might be expected ... time and funding limitations prevented repetition of these tests with the final prototype.)

Another series of tests was conducted using different combinations of rifles, 20-round magazines, BFA's, and charge weights. When the BFA exhaust port was reduced from .063" to .043", good weapon performance was achieved at propellant charges as low as 6.0 grains; firing was erratic at 5.5 grains. Only four of 130 cases tested had a noticeable crack and all the cracks were insignificant. Several short cycles occurred, some being attributed to charges too low for the orifice used. However, most occurred with one rifle/magazine combination, which also produced one short cycle when firing 20 M200 blank cartridges using the .063" BFA and one when firing 20 M193 ball cartridges (w/o BFA).

Development Using Four-Cavity Production-Type Mold

A four-cavity injection mold was designed and fabricated to obtain a faster production rate (Figure 10). This design emphasized better gating techniques to reduce or eliminate cold weld lines in the plastic cartridge case (Figure 11). A diaphragm, or ring, gating system was used because it provides a faster, more continuous flow of material around the core and into the cavity. With the shortening of the cavity fill time, the material fuses at a higher temperature resulting in a stronger weld line. Actually, there should be no weld lines because the molten plastic should flow into the entire cavity peripherally with this gate.

An initial lot of 300 blank cartridges was manufactured using Lexan 1[illegible] polycarbonate and operational testing was conducted with the M16A1 rifle in the fully-automatic mode. A total of 109 rounds was fired using a 30-round magazine. All rounds were segregated according to the cavity in which they were molded. The propellant charge for each was 7.0 grains of WC-370 propellant. A .043" gas port was used in the BFA. A total of 11 rounds showed moderate cracking, primarily near the cartridge rim. These cracks did not appear to harm performance; weapon functioning was 100% and the observers did not even notice any hesitations. Cracked cases were obtained from all four cavities. These cases were sectioned and inspected. A residue from burnt propellant was found along the interface between the case and the primer retainer. It was apparent that the primer retainer was failing to obturate and sufficient gas pressure was occurring along the interface to cause occasional cracking.

A redesign of the primer retainer resulted in the testing of 14 different models. The final design provides a positive seal; its circumferential knife edge is pressed to a depth of .040" into the end of the counterbore of the case as shown in Figure 12. However, when good sealing was obtained, a rash of blown primers occurred. This was solved by increasing the diameter of the flash hole of the retainer to .093". Also, frequent nose separations again occurred. A significant improvement resulted when a .015" radius was added where the ogive meets the front chamber of the case as shown in Figure 13. Petal loss again became a major problem. Complete slitting of the nose along the grooves and then sealing with RTV sealant did not eliminate

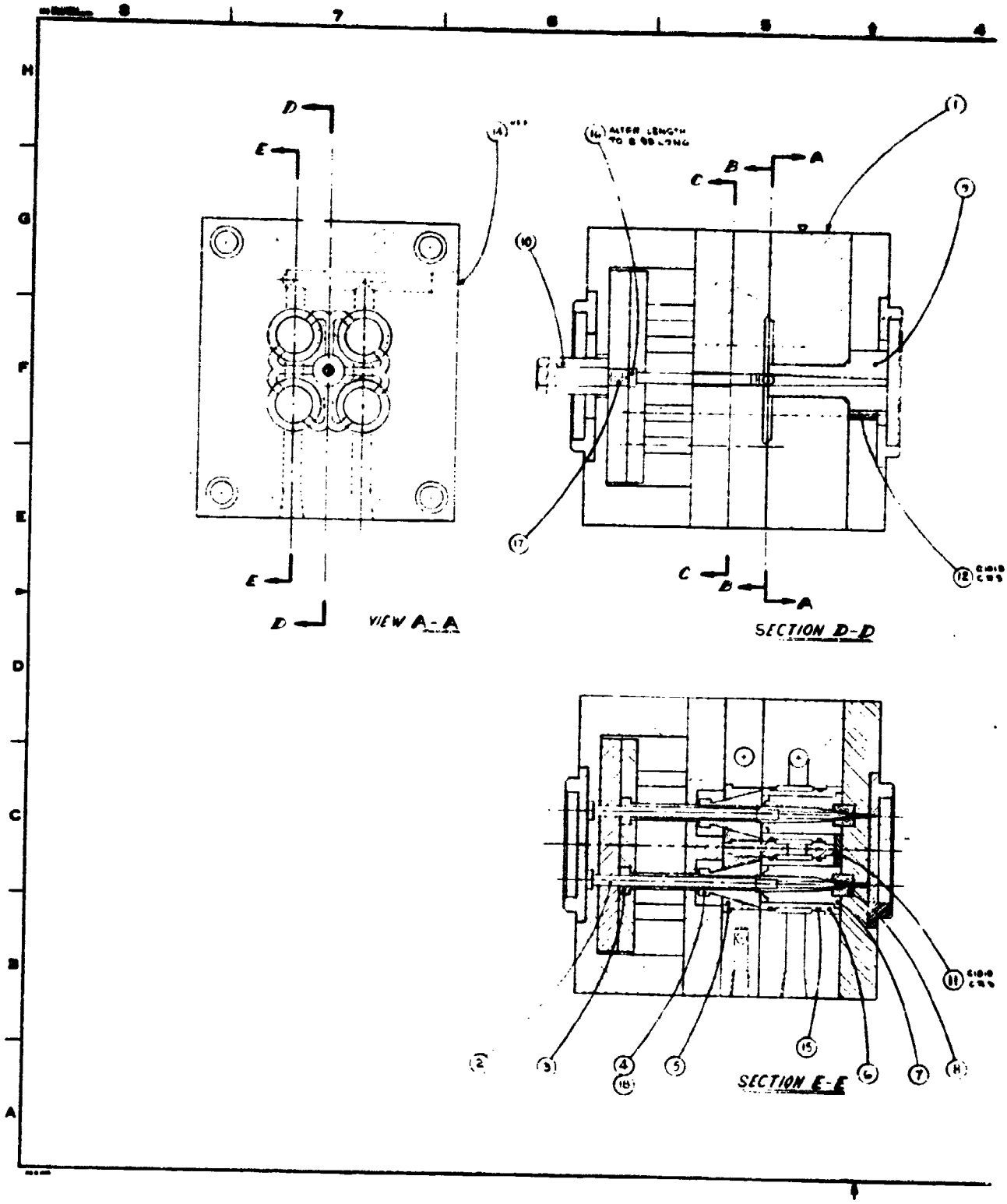


FIGURE 10. Four-Cavity Production-Type Injection Mold

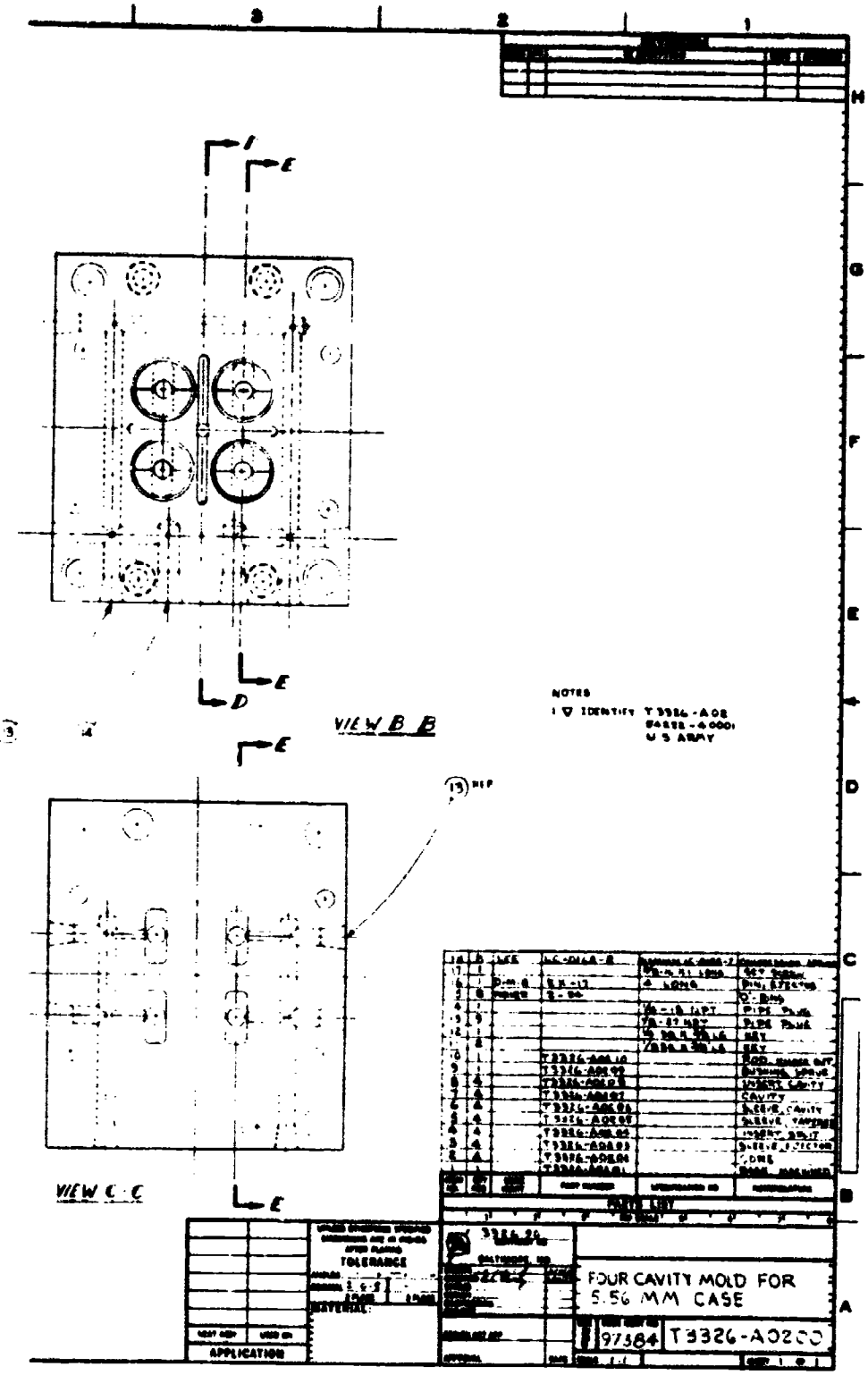


FIGURE 10. (Cont.)

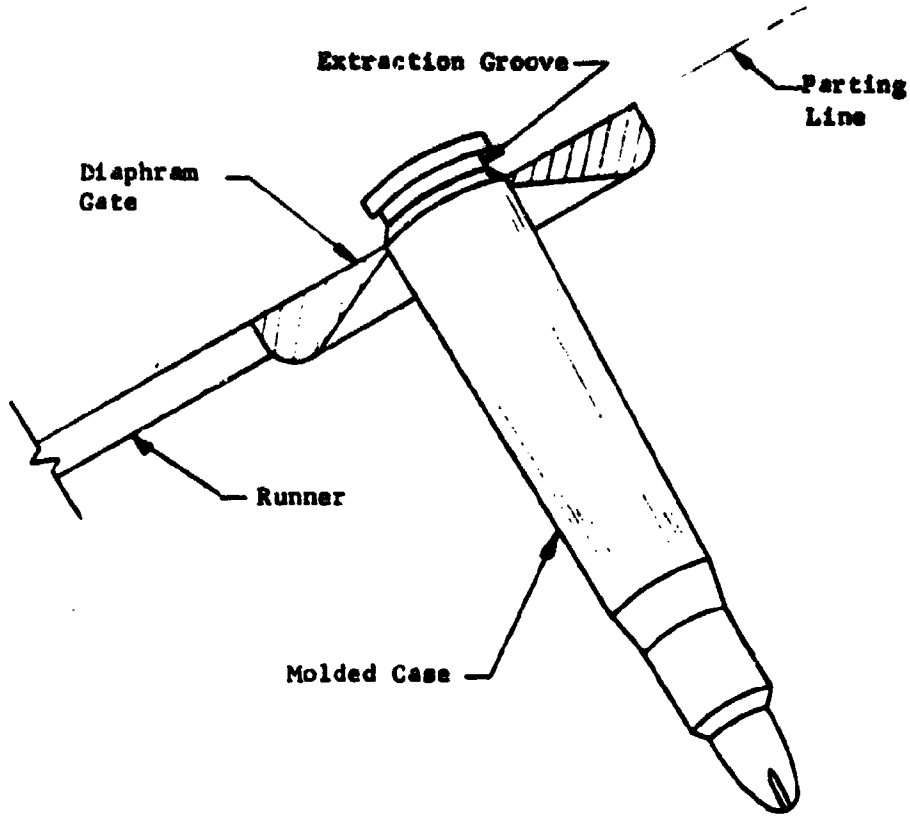


FIGURE 11. Cutaway of Diaphragm Gate

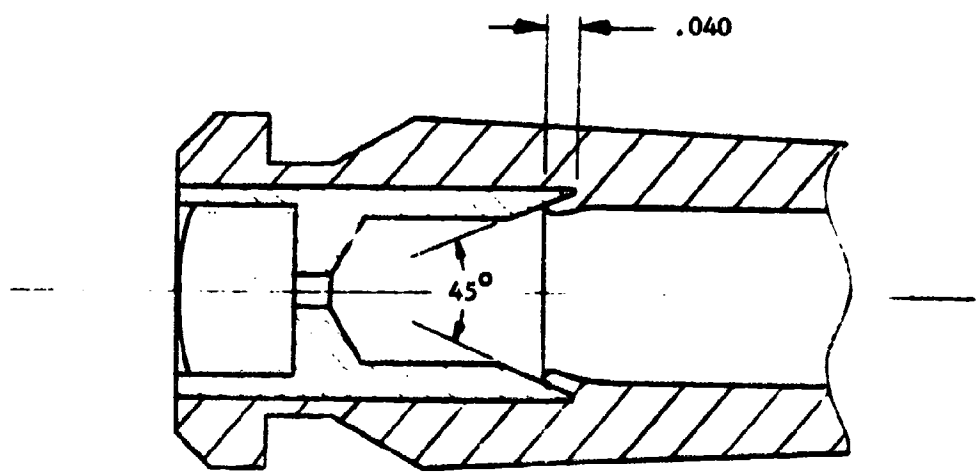


FIGURE 12. Cutaway Showing Final Primer Retainer

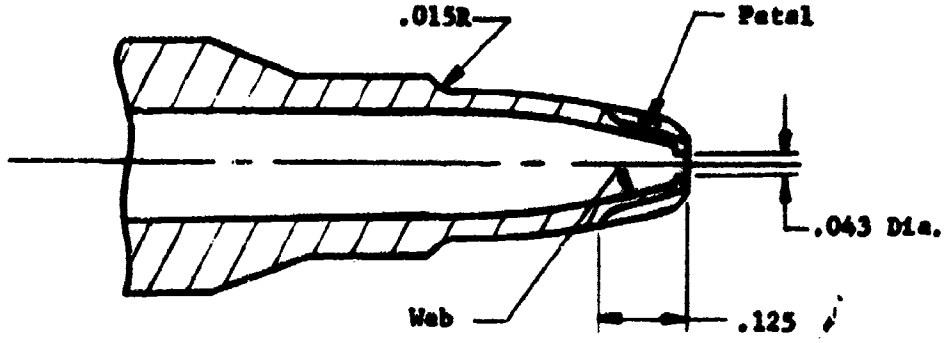


FIGURE 13. Cutaway Showing Final Ogive Details

this problem. Considerable improvement was achieved by using a mold core that was off center at the nose end. This produced unequal petal thicknesses and promoted progressive rupture of the nose in a manner that reduced fractures.

An investigation of several slower-burning propellants resulted in the halting of the petal losses. Type WC-820 propellant was selected for use from the more promising of those tested. It was found that round integrity was satisfactory even when the charge was increased to 7.5 grains. With this charge, the rifle operated quite consistently when the standard BFA with a .063" port was used. (Note: The rounds held up during later tests with charges up to 9.0 grains, which is very close to the maximum capacity of the cavity.)

Acceptance Testing by LWL

Two hundred rounds loaded with 7.5 grains of WC-820 propellant were delivered to LWL for acceptance testing prior to fabrication of a larger quantity for engineering design and safety evaluation tests and for user field evaluation. The LWL firing record is presented in Table II. Two M16A1 rifles were used in combination with two standard 20-round magazines and two of the newly adopted 30-round magazines. Both rifles operated satisfactorily when fired using the BFA with the small .043" gas port, but a couple of failures were recorded for each rifle when using the standard .063" BFA. One hundred ninety eight fired cartridges were recovered and no primer loss had occurred. Two rounds were found to have minor cracks at the rim/extraction groove area. One round had lost the tip of a petal. At no time during the firing were the short cycles and bolt overrides attributed to the cracked cases or the lost

petal segment.

TABLE II. Firing Record, Plastic 5.56mm Blank Cartridge, 17 January 1974

Purpose of Test: Verification of performance prior to authorizing production.

Cartridge: Plastic, blank, 5.56mm, 7.5 grains of WC-820 propellant.

Rifles: M16A1 ... Serial Nos. 4572947 and 4573952.

Magazines: 20-round, marked 20-103 and 20-114 (new).
30-round, marked 30-5 and 30-6.

Blank Firing Attachments: Standard, M15A2 (.063" port) and Modified (.043").

| Test | Rifle | Mag. | BFA | Load | Fired | Selector | Comments |
|---|---|---|---|---|---|---|---|
| 1 | 47 | 30-5 | 063 | 30 | 3 | Automatic | Stoppage was a failure to feed |
| | | | " | 27 | 1 | " | Did not eject |
| | | | 043 | 26 | 26 | " | Fired in short bursts; O.K. |
| 2 | 47 | 20-114 | 043 | 20 | 20 | Auto | Short bursts; O.K. |
| 3 | 47 | 20-103 | 063 | 20 | 20 | Auto | Short bursts; O.K. |
| 4 | 47 | 30-6 | 063 | 30 | 30 | Auto | Short bursts; O.K. |
| 5 | 52 | 30-5 | 063 | 30 | 3 | Auto | Failure to feed |
| | | | " | 27 | 1 | " | Extr.&Eject.;Feeding override |
| | | | " | 26 | 1 | Semi | Failure to feed |
| | | | " | 25 | 1 | " | O.K. |
| | | | " | 24 | 1 | " | O.K. |
| | | | " | 23 | 23 | Auto | Short bursts; O.K. |
| 6 | 52 | 20-114 | 063 | 20 | 20 | Auto | Short bursts; O.K. |
| 7 | 52 | 30-6 | 063 | 30 | 30 | Semi | Single shots; O.K. |
| 8 | 52 | 20-103 | 043 | 20 | 20 | Auto | Short bursts; O.K. |
| 9 | 52 | 20-103 | 063 | 20 | 20 | Auto | M200 blank ctg.; short bursts |
| 10 | 47 | 20-114 | 063 | 20 | 20 | Auto | M200 blank ctg.; short bursts |

These cartridges performed much better than had been anticipated based on previous results. Although a cartridge for use with the standard BFA had been the original task goal, a BFA with a small .043" port had been considered the best that could be achieved. Now it appeared that the original goal was feasible. However, it was apparent that 7.5 grains would not be adequate for cold guns. The contractor was directed to load 100 blank cartridges of the final delivery quantity with 8.0 grains and 100 with 8.5 grains of propellant (WC-820) and deliver them to LWL as soon as possible. He was then directed to load 2000 cartridges at the 7.5 grain quantity and await instructions from LWL before continuing. This urgent procedure was necessary because of the impending contract termination date seven working days after these tests.

Since unforeseen development problems had consumed excessive time and money, the total delivery quantity under this contract was lowered from 40,000 rounds to 8,000 rounds. The contract could not be extended without the infusion of FY75 funds and because word had been received that LWL would be disestablished effective 30 June 1974, which would not allow sufficient time for contract modification actions, fabrication, thorough engineering design testing, and user field evaluation to be conducted.

The cartridges loaded with 8.0 and 8.5 grains of WC-820 propellant were received and were tested immediately; the firing record is presented in Table III. There were no failures to function the rifle in the automatic mode with either charge when fired with the standard .063" BFA. A decision was made to emphasize the 8.5 grain loading since the few occurrences of small cracks did not seem to have any detrimental effect on overall weapon/cartridge performance. This would insure better performance at lower temperatures since propellant output generally drops as it is cooled. The contractor was requested to load the remaining rounds as follows: 1900 with 8.0 grains, 3700 with 8.5 grains, and 200 with 9.0 grains for overpressure-type testing.

TABLE III. Firing Record, Plastic 5.56mm Blank Cartridge, 22 January 1974

Purpose of Test: Comparison of performance with different charges of WC-820 ball propellant prior to determining production quantities for each loading.

Cartridge: Plastic, blank, 5.56mm.

Propellant: WC-820 ... 8.0 and 8.5 grains.

Rifles: M16A1 ... Serial Nos. 4572947 and 4573952.

Magazines: 20-round, marked 20-103 and 20-114 (new).
30-round, marked 30-5 and 30-6.

Blank Firing Attachment: Standard, M15A2 with .063" gas port.

| Test | Rifle | Mag. | BFA | Load | Grains | Fired | Selector | Comments |
|---|---|---|---|---|---|---|---|---|
| 11 | 52 | 20-103 | 063 | 20 | 8.0 | 20 | Automatic | Short bursts; O.K. |
| 12 | 52 | 30-5 | 063 | 30 | 8.0 | 30 | Auto | Longer bursts; O.K. |
| 13 | 47 | 20-114 | 063 | 20 | 8.5 | 20 | Auto | Short bursts; O.K. |
| 14 | 47 | 30-6 | 063 | 30 | 8.5 | 30 | Auto | Longer bursts; O.K. |
| 15 | 52 | 20-103 | 063 | 20 | 8.0 | 10 | Auto | O.K. (stop to cmpr rate) |
| 16 | 47 | 20-114 | 063 | 20 | 8.5 | 20 | Auto | O.K. |
| 17 | 52 | 20-103 | 063 | 10 | 8.0 | 10 | Auto | O.K. |
| 18 | 52 | 30-5 | 063 | 30 | 8.0 | 30 | Auto | Long bursts; O.K. |
| 19 | 47 | 30-6 | 063 | 30 | 8.5 | 30 | Auto | Long bursts; O.K. |

## Engineering Design and Safety Evaluation Testing

The engineering design and safety evaluation tests were considerably reduced in scope from the original plans because of the reduced quantity of cartridges available and because of funding and time limitations. Limited tests were conducted by LWL personnel at Aberdeen Proving Ground. A total of 1480 additional rounds were fired using four M16A1 rifles and an assortment of 20-round and 30-round magazines. Standard BFA's with .063" gas ports were used. The basic firing record is presented in Table IV. One primer was lost at 8.5 grains and two at 9.0 grains. There were no nose separations and no loss of petals. There were no major cracks. At 8.5 grains, approximately 3% of the cartridges had small cracks at the rim and 6% exhibited small hairline cracks along the body in the vicinity of the extractor groove. The incidence of cracking was about twice as great at 9.0 grains than at 8.0 and 7.5 grains. It was evident that 8.0 grains was the minimum charge for this BFA, and that 8.5 grains was more desirable for starting cold rifles in the automatic mode of fire. Unfortunately, time and facilities did not permit testing at temperature extremes. Low power was generally the cause of the short cycles, resulting in failures to extract and eject or to pick up the following round during feeding. One magazine was obviously defective. The first 25 tests were conducted from a gun mount to insure safety; thereafter, shoulder firing was conducted. The only problem observed at 9.0 grains was a tendency to peen the end of the BFA, which eventually became difficult to remove from the rifle. The rifles were not cleaned during the course of these firings to observe the effect on performance. Rifle No. 789785 was fired 610 times with plastic blank cartridges and 62 with M200 blanks. One stoppage could be directly attributed to a dirty bolt. Rifle No. 4622841 failed early during the testing and was withdrawn from use. The problem was not identified. The rate of automatic fire was within the limits desired, ranging from approximately 700 to 900 shots per minute. The incidence of failures to fully cycle the rifle was approximately 1% with the 8.5 grain charge and 3% with the 8.0 grain charge. All cartridges fired.

TABLE IV. Firing Record, Plastic 5.56mm Blank Cartridge, 11-12 April 1974

Purpose of Test: Performance and safety testing.

Cartridge: Plastic, blank, 5.56mm.

Propellant: WC-820 ... 7.5, 8.0, 8.5, and 9.0 grains.

Rifles: M16A1 ... Serial Nos. 789785, 4572947, 4573952, and 4622841.

Magazines: 20-round (20-121 - 20-130) and 30-round (30-21 - 30-32).

Blank Firing Attachments: M15A2 (standard) with .063" gas port.

| Test | Rifle | Mag. | Load | Gr. | Fired | Sel. | Comments |
|---|---|---|---|---|---|---|---|
| 1 | 41 | 30-21 | 30 | 9.0 | 30 | Semi | Single shots; fired O.K. |
| 2 | 41 | 30-28 | 30 | 9.0 | 21 | Semi | Single shots; bolt didn't lock |
| | | | 9 | " | 9 | " | Single shots |
| 3 | 41 | 20-130 | 20 | 9.0 | 16 | Auto | Failure to extract & eject |
| | | | 4 | " | 1 | " | " |
| | | | 3 | " | 1 | " | " three |
| | | | 2 | " | 1 | " | " primers |
| | | | 1 | " | 1 | " | " BFA shot. lost |
| 4 | 41 | 20-130 | 20 | 9.0 | 1 | Auto | Same failure |
| | | | 19 | " | 1 | " | " |
| | | | 18 | " | 1 | " | " Rifle out of order. |
| 5 | 47 | 20-130 | 20 | 9.0 | 20 | Auto | O.K. |
| 6 | 47 | 20-130 | 17 | 9.0 | 17 | Auto | O.K. |
| 7 | 47 | 30-28 | 30 | 9.0 | 30 | Semi | O.K. (single shots) |
| 8 | 47 | 30-21 | 30 | 9.0 | 30 | Auto | Short bursts; O.K. |
| 9 | 85 | 20-129 | 20 | 7.5 | 10 | Semi | Single shots; O.K. |
| 10 | 52 | 20-122 | 20 | 8.0 | 20 | Auto | Short bursts; O.K. |
| 11 | 47 | 20-126 | 20 | 8.5 | 20 | Auto | Short bursts; O.K. |
| 12 | 47 | 20-127 | 20 | 8.5 | 20 | Auto | O.K. |
| 13 | 47 | 20-126 | 20 | 8.5 | 20 | Auto | O.K. |
| 14 | 47 | 20-127 | 20 | 8.5 | 20 | Auto | O.K. |
| 15 | 85 | 20-128 | 20 | 8.0 | 1 | Auto | Short cycle |
| | | | 19 | 8.0 | 1 | Auto | " |
| | | | 18 | " | 1 | " | " |
| | | | 17 | " | 17 | " | O.K. |
| 16 | 52 | 20-125 | 20 | 8.0 | 20 | Auto | O.K. |
| 17 | 85 | 20-128 | 20 | 8.0 | 20 | Auto | O.K. |

TABLE IV. (Cont.)

| Test | Rifle | Mag. | Load | Gr. | Fired | Sel. | Comments |
|---|---|---|---|---|---|---|---|
| 18 | 47 | 20-127 | 20 | 8.5 | 1 | Auto | Feeding jam; round withdrawn |
| | | | 18 | " | 18 | " | O.K. |
| | | | 1 | " | 1 | Semi | Fired round that had jammed |
| 19 | 47 | 30-27 | 30 | 8.5 | 27 | Auto | Short bursts; weak primer strike |
| | | | 2 | " | 2 | " | O.K. |
| | | | 1 | " | 1 | Semi | Reloaded and fired |
| 20 | 85 | 20-128 | 20 | 8.0 | 20 | Auto | Short bursts; O.K. |
| 21 | 52 | 30-30 | 30 | 8.0 | 30 | Auto | Short bursts; O.K. |
| 22 | 52 | 30-30 | 30 | 8.0 | 30 | Auto | Short bursts; O.K. |
| 23 | 85 | 30-23 | 30 | 8.0 | 30 | Auto | Short bursts; O.K. |
| 24 | 52 | 30-31 | 30 | 7.5 | 30 | Auto | Short bursts; O.K. |
| 25 | 85 | 30-24 | 30 | 7.5 | 30 | Auto | Short bursts; O.K. |
| 26 | 52 | 30-22 | 30 | 8.5 | 30 | Auto | O.K.; began firing from shoulder |
| 27 | 85 | 30-27 | 30 | 8.5 | 29 | Auto | Failed to extract |
| | | | 1 | " | 1 | " | O.K. |
| 28 | 47 | 30-31 | 30 | 7.5 | 1 | Auto | Short cycle |
| | | | 29 | " | 1 | " | " |
| | | | 28 | " | 1 | " | " |
| | | | 27 | " | 1 | " | " |
| | | | 26 | " | 1 | " | " |
| | | | 25 | " | 1 | " | " |
| | | | 24 | " | 1 | " | " |
| | | | 23 | " | 1 | " | " |
| | | | 22 | " | 22 | " | Short bursts; O.K. |
| 29 | 52 | 30-25 | 30 | 7.5 | 1 | Auto | Magazine jammed (nose stayed down) |
| | | | 29 | " | 1 | " | " " |
| | | | 28 | " | 1 | " | " " |
| | | | 27 | " | 1 | " | " " |
| | | | 26 | " | 1 | " | " " |
| | | | 25-11 | " | 1 ea. | " | " (magazine withdrawn) |
| 30 | 85 | 30-24 | 30 | 7.5 | 1 | Auto | Failed to extract |
| | | | 29 | " | 1 | " | " |
| | | | 28 | " | 1 | " | " |
| | | | 27 | " | 27 | " | O.K. |
| 31 | 47 | 30-24 | 30 | 7.5 | 1 | Auto | Failed to extract |
| | | | 29 | " | 1 | " | " |
| | | | 28 | " | 28 | " | O.K. |

TABLE IV. (Cont.)

| Test | Rifle | Mag. | Load | Gr. | Fired | Sel. | Comments |
|---|---|---|---|---|---|---|---|
| 32 | 52 | 30-31 | 30 | 7.5 | 1 | Auto | Failed to feed |
| | | | 29 | " | 1 | " | " |
| | | | 28 | " | 1 | " | " |
| | | | 27-17 | " | 1 ea. | " | " |
| | | | 16 | " | 16 | Semi | Single shots fired O.K. |
| 33 | 85 | 30-24 | 30 | 7.5 | 30 | Auto | O.K. |
| 34 | 47 | 30-23 | 30 | 8.0 | 1 | Auto | Failed to extract |
| | | | 29 | " | 29 | " | Short bursts; O.K. |
| 35 | 85 | 30-26 | 30 | 8.0 | 30 | Auto | Short bursts; O.K. |
| 36 | 52 | 30-30 | 30 | 8.0 | 1 | Auto | Failed to extract |
| | | | 29 | " | 1 | " | Failed to feed |
| | | | 28 | " | 2 | " | Failed to extract |
| | | | 26 | " | 26 | " | Short bursts; O.K. |
| 37 | 85 | 30-30 | 30 | 8.0 | 30 | Auto | Short bursts; O.K. |
| 38 | 47 | 30-23 | 30 | 8.0 | 30 | Auto | Short bursts; O.K. |
| 39 | 52 | 30-26 | 30 | 8.0 | 30 | Auto | Short bursts; O.K. |
| 40 | 85 | 30-31 | 30 | 7.5 | 30 | Auto | Short bursts; O.K. |
| 41 | 85 | 30-24 | 30 | 7.5 | 30 | Auto | O.K. |
| 42 | 85 | 20-123 | 20 | 7.5 | 20 | Auto | O.K. |
| 43 | 85 | 20-124 | 20 | 7.5 | 20 | Auto | O.K. |
| 44 | 85 | 20-129 | 10 | 7.5 | 10 | Auto | O.K.; Fired out(See Test 9) |
| 45 | 85 | 20-129 | 20 | 7.5 | 20 | Auto | Short bursts; O.K. |
| 46 | 85 | 20-123 | 20 | 7.5 | 20 | Auto | Short bursts; O.K. |
| 47 | 85 | 20-124 | 20 | 7.5 | 20 | Auto | Short bursts; O.K. |
| 48 | 52 | 30-30 | 30 | 8.0 | 30 | Auto | O.K. |
| 49 | 85 | 30-24 | 30 | 7.5 | 30 | Auto | O.K. |
| 50 | 85 | 30-31 | 30 | 7.5 | 30 | Auto | Short bursts; O.K. |
| 51 | 85 | 30-24 | 30 | M200 | 30 | Auto | O.K.; Much less muzzle flash |
| 52 | 85 | 30-31 | 30 | M200 | 30 | Auto | O.K.; Flash negligible |
| 53 | 85 | 30-22 | 30 | 8.5 | 30 | Auto | O.K.; Extensive flash |
| 54 | 85 | 30-29 | 30 | 8.5 | 30 | Auto | O.K. |
| 55 | 47 | 30-27 | 30 | 8.5 | 11 | Auto | Jammed during feeding |
| | | | 19 | " | 19 | Auto | Short bursts; O.K. |
| 56 | 52 | 20-128 | 20 | 8.0 | 6 | Auto | Jammed during feeding |
| | | | 14 | " | 8 | Auto | " |
| | | | 6 | " | 6 | Auto | O.K. |

TABLE IV. (Cont.)

| Test | Rifle | Mag. | Load | Gr. | Fired | Sel. | Comments |
|---|---|---|---|---|---|---|---|
| 57 | 85 | 20-125 | 20 | 8.0 | 1 | Auto | Bolt didn't go home;very dirty |
| | | | 19 | " | 19 | " | Short bursts; O.K. |
| 58 | 47 | 20-122 | 20 | 8.0 | 1 | Auto | Failure to feed |
| | | | 19 | " | 10 | " | Short bursts; jammed |
| | | | 9 | " | 1 | " | Jammed |
| | | | 8 | " | 8 | " | Short bursts; O.K. |
| 59 | 52 | 30-23 | 20 | 8.0 | 2 | Auto | Failure to feed |
| | | | 18 | " | 18 | Auto | Short bursts; O.K. |
| 60 | 85 | 20-121 | 20 | 8.5 | 20 | Auto | O.K. |
| 61 | 47 | 20-126 | 20 | 8.5 | 20 | Auto | O.K. |
| 62 | 52 | 20-127 | 20 | 8.5 | 20 | Auto | O.K. |
| 63 | 85 | -- | 1 | M200 | 1 | Semi | O.K. |
| 64 | 85 | -- | 1 | M200 | 1 | Semi | O.K. |

## CONCLUSIONS

The plastic 5.56mm blank cartridge has been demonstrated to operate the M16A1 rifle reliably in both the automatic and the semiautomatic modes of fire at ambient temperature. Unfortunately, testing at temperature extremes has been very limited and the tests that were conducted were not of the final cartridge configuration.

The cartridge closely resembles the standard ball ammunition, including a bullet-shaped ogive, so that the feeding operation closely simulates live ammunition. Weapon jamming caused by stubbing during feeding was not a factor with this configuration while it runs 5% or more with the blunt-nosed M200 blank cartridge.

With a propellant loading of 8.5 grains of WC-820 propellant, performance in the automatic mode of fire exceeded 99% when using the standard blank firing attachment (.063-inch gas port). It was evident that the propellant quantity could be reduced significantly if the BFA port size could be reduced.

This blank cartridge generally outperforms the reported reliability of the M200 blank cartridge. In addition, it should cost no more to manufacture (approximately 4.16¢ per cartridge) and its use would eliminate the requirement that presently exists for salvaging expended cartridge cases.

# APPENDIX

## Military Characteristics

**Preceding page blank**

16 August 1971

MILITARY CHARACTERISTICS FOR PLASTIC 5.56MM BLANK CARTRIDGE

1. Requirement:

a. Provide U.S. Army units engaged in training activities the capability to reliably conduct blank firing exercises with the M-16 rifle utilizing expendable plastic 5.56mm blank cartridges.

b. Source of Requirement: MFR, dated 27 January 1971, Subject: FONECON, LTC Tucker, Ranger Training Center, Eglin AFB, Florida.

2. Operational and Organizational Concepts:

a. Operational Concept: U. S. Army units equipped with the M-16 rifle would utilize this ammunition to conduct realistic training exercises using blank ammunition.

b. Organizational Concept: It is envisioned that this item would be available to using units through normal supply channels for the class of supply.

3. Justification and Priority:

a. Reason for the Requirement: The 5.56mm blank ammunition presently in use has a brass cartridge case. This requires that expended cases be recovered for reuse or sale as salvageable brass. In many locations, local inhabitants enter restricted areas to recover this brass for the purpose of selling it to scrap dealers. There have been numerous incidents in which these civilians have been injured or killed when engaged in unauthorized collecting of spent brass. A plastic cartridge would eliminate the requirement for the U.S. Army to salvage spent brass, could be constructed at a lower cost per item, remove some of the temptation from the local inhabitants, and still allow realistic blank firing exercises. The requirement to police a training area would still exist; however, manufacture of the round from a degradeable plastic would eliminate this problem.

b. Priority for Requirement: None determined.

4. Characteristics: The plastic 5.56mm blank cartridge should be capable of reliable performance when utilized in the M-16 or other weapons using the 5.56mm cartridge.

a. Physical Characteristics:

(1) Number of major components: (Essential). One.

(2) Maximum/minimum weight: (Essential). Same as or less than present 5.56mm blank ammunition.

(3) Cubic Measurements: (Essential). Same as 5.56mm blank ammunition

presently in use.

(4) Environmental Requirement: (Essential). Climatic categories 1 thru 6. (AR 70-38).

(5) Paradrop: (Essential). Yes.

(6) Transportability: (Essential). Man, air, vehicle transportable.

(7) Expendable: (Essential). Yes.

(8) (Desired). That cartridge case deteriorate after use.

(9) Storage: (Essential). Shelf life of 5 years.

b. Performance Requirements:

(1) Safety: (Essential). Will not penetrate .025 inch Kraft paper at ranges greater than 2 feet directly in front of muzzle.

(2) Reliability: (Essential). 97% reliability in climatic categories (1 thru 6).

(3) Functioning: (Essential). Weapon will function (Semi-automatic) with the use of a blank adapter.

c. Maintenance Concept: (Essential). Require no maintenance other than visual inspection prior to use.

d. Human Engineering Characteristics: (Essential). Require no special training and be safe in operation in accordance with AR 602-1, dated 4 March 1969 and 385-16, dated 11 February 1967.

e. Priority of Characteristics: Performance in order as listed in para 4b.

5. Personnel Considerations: Introduction of this item into the Army inventory will require no additional personnel spaces in TO&E of tactical units.

DATE 16 Aug 71

APPROVED: (Sgd.)
F. A. HENNING
LTC, GS
C, Military Operations Division