NAVSEA
WARFARE CENTERS
NEWPORT

DEPARTMENT OF THE NAVY
NAVAL UNDERSEA WARFARE CENTER
DIVISION NEWPORT
OFFICE OF COUNSEL
PHONE: (401) 832-3653 FAX: (401) 832-4432
DSN: 432-3653

Attorney Docket No. 80196
Date: 15 October 2007

The below identified patent application is available for licensing. Requests for information should be addressed to:

PATENT COUNSEL
NAVAL UNDERSEA WARFARE CENTER
1176 HOWELL ST.
CODE 00OC, BLDG. 11
NEWPORT, RI 02841

Serial Number	11/871,373
Filing Date	12 October 2006
Inventor	Paul M. Dunn

If you have any questions please contact James M. Kasischke, Supervisory Patent Counsel, at 401-832-4230.

DISTRIBUTION STATEMENT
Approved for Public Release
Distribution is unlimited

20071022067

Attorney Docket No. 80196

TWO PHASE WATER JET PROPULSION FOR HIGH-SPEED VEHICLES

STATEMENT OF GOVERNMENT INTEREST

[0001] The invention described herein may be manufactured and used by or for the Government of the United States of America for governmental purposes without the payment of any royalties thereon or therefore.

CROSS REFERENCE TO OTHER PATENT APPLICATIONS

[0002] None.

BACKGROUND OF THE INVENTION

(1) Field Of The Invention

[0003] The present invention relates to a water propulsion apparatus, and more particularly to a two phase water jet propulsion apparatus.

(2) Description of the Prior Art

[0004] In a typical water propulsion system, the system employs a pump connected to a nozzle. The pump, usually a high speed centrifugal water pump, is driven by an engine such as a two stroke gasoline engine, four stroke gasoline engine, or a diesel engine. The system produces thrust by first increasing

velocity of the water flow, and subsequently expanding the water flow.

[0005] The engine used to pump the water in the water propulsion system generates exhaust gas and sound waves. The exhaust and sound waves are directed away from the engine compartment by an exhaust system or passageway that is connected to an exhaust port of the engine. The exhaust system is then either extended to open into the water or into the air/atmosphere. In the exhaust systems where the exhaust gas is discharged into the atmosphere, the exhaust noise creates a problem.

[0006] In the propulsion systems where the exhaust is introduced into the water, the exhaust is introduced in a low-pressure region or after the water begins to expand. While introducing the exhaust gas into the low-pressure region (after the water has expanded) reduces the sounds waves (noise level), this does not increase the efficiency of the water propulsion system or increase thrust of the water propulsion system.

[0007] Accordingly, a need exists for a water propulsion apparatus that reduces the noise level generated by the engine. The apparatus should also increase the thrust produced by the propulsion apparatus. Moreover, the apparatus should increase the overall efficiency of the propulsion apparatus.

SUMMARY OF THE INVENTION

[0008] A water propulsion apparatus is disclosed which includes a nozzle and a passageway communicating with an exhaust gas source. The nozzle includes a first region that increases the water flow velocity and a second region that subsequently expands the water, thereby producing a thrust. The passageway is connected to the nozzle at a point in the first nozzle region while the water flow velocity is being increased and prior to the second nozzle region wherein the water being expanded. In a preferred embodiment, the exhaust gas source is an engine. The engine can be a diesel engine, a gasoline engine, or a hot gas piston expander.

[0009] In a further embodiment, the present invention includes a method of increasing the thrust of a water propulsion apparatus. The method includes the steps of providing an engine that produces an exhaust gas, providing a nozzle having a first region which increases the water flow velocity and a second region which subsequently expands the water, and introducing the exhaust gas at a point in the first nozzle region while the water flow velocity is being increased and prior to the second nozzle region wherein the water is being expanded.

BRIEF DESCRIPTION OF THE DRAWINGS

[0010] These and other features and advantages of the present invention will be better understood in view of the following description of the invention taken together with the drawing wherein:

[0011] **FIG. 1** is a schematic view of the present invention.

DETAILED DESCRIPTION OF THE INVENTION

[0012] Referring now to **FIG. 1**, a water propulsion apparatus **10** in accordance with the present invention, generally includes an exhaust gas source **12**, a nozzle **14** and a gas passageway **15**. The exhaust gas source **12** is preferably an engine, though other gas producing sources would be recognizable to those skilled in the art. In a preferred embodiment, the engine is a diesel engine, a hot gas piston expander or a gasoline engine but not limited to, a two stroke engine or a four stroke engine.

[0013] The engine **12** drives a pump **16**, typically a high-speed centrifugal pump, via a drive means **17** (such as, but not limited to, a drive shaft, transmission, drive belt, etc.) that displaces water through a water intake **18** from a water source (not shown), through the pump **16**, and into the nozzle **14**. As the speed of the pump **16** is increased, the amount of water displaced, the mass flow rate "M", is increased. For a given

pump speed, the pump **16** will substantially have a constant mass flow rate M.

[0014] The nozzle **14** is fluidly connected to the pump **16**, and can be any nozzle known to those skilled in the art. In general, the nozzle **14** is a converging passageway wherein the nozzle diameter at region R_1 is larger than the nozzle diameter at region R_2. For a given mass flow rate M, the decrease in the diameter from R_1 to R_2 increases a velocity "V" of the water, and consequently increases the momentum of the water. As the accelerated water exits the nozzle **14** at a nozzle outlet **20**, the increased momentum translates into thrust. The thrust produced by the nozzle **14** is approximated by the difference in the momentum of the water jet:

$$Thrust = MV_{Jet} - MV \qquad (1)$$

where M is the mass flow rate through the system, V is the velocity of the vehicle, and V_{Jet} is the velocity at the nozzle which is nominally:

$$V_{Jet} = (2(P_{Pump} - P_{Ocean})/\rho_{Ocean})^{1/2} \qquad (2)$$

where P_{Pump} is pressure of the pump, P_{Ocean} is the pressure of the ocean, and ρ_{Ocean} is the density of the water. This principle is well understood and known by those skilled in the art.

[0015] A result of decreasing the diameter of the passageway, and consequently increasing the water velocity, is that the pressure within the nozzle **14** at region R_1 is greater than the

pressure at region R_2. This effect is reflected by Bernoulli's Equation.

[0016] In the past, most engines operate efficiently at lower exhaust back-pressures. Exhaust back-pressure is a measurement of the resistance to the flow of exhaust encountered by the engine. By and large, as engine exhaust back-pressure increases, the engine **12** requires more power to remove the exhaust gasses **15** from a combustion chamber of the engine, thus reducing the performance and efficiency. New engine designs, however, actually operate more efficiently at higher Net Mean Effective Pressure (NMEP). NMEP can be derived/defined from an expander's or engine's net power, shaft speed, and volume displaced, and is approximated by:

$$NMEP = \frac{NET\ POWER\ X\ RPC}{VD\ X\ RPM} \qquad (3)$$

[0017] The variable "RPC" (output shaft revolutions per cycle) is one for hot gas piston expanders, one for a two stroke internal combustion engine, and two for a four stroke internal combustion engine. Table 1 summarizes the maximum power for several engines.

Table 1

ENGINE	Rated Power	Rated Speed	Displacment	RPC	NMEP
Merc. 2.4 Litre	240 hp	7000 rpm	142 in^3	1	96 psi
GM 5.7 Litre	210 hp	4400 rpm	350 in^3	2	108 psi
DD 6V053TA*	350 hp	2800 rpm	305 in^3	1	162 psi
Cummins 370B	370 hp	3000 rpm	379 in^3	2	257 psi
*Detroit Diesel					

[0018] A gas passageway **22**, according to the present invention, is connected to the nozzle **14** at a region R_3 where the velocity of the water flow is being increased, yet prior to the water being expanded. This region R_3 is in a high-pressure region of the nozzle **14**. The resulting thrust can be approximated by:

$$Thrust = (M + M_{Exhaust})V_N - MV \qquad (4)$$

where:

$$V_N = ((2(P_{Pump} - P_{Ocean})/\rho_{Mixture})^{1/2} \qquad (5)$$

[0019] This results in the exhaust **15** being mixed with water in the nozzle **14**. Consequently, the density, $\rho_{Mixture}$, is decreased, the total mass flow rate, $(M + M_{Exhaust})$, is increased, and the thrust is increased. When the water propulsion apparatus **10** is used in combination with the engine (gas source) **12** which operates most efficiently at an increased NMEP, the result is a water propulsion apparatus having increased thrust, increased efficiency, and decreased noise levels.

[0020] The water propulsion apparatus **10** may be used in on personal watercraft (or "Jet Ski") or high speed underwater vehicles (such as torpedoes) or high speed surface craft.

[0021] It will be understood that many additional changes in the details, materials, steps and arrangement of parts, which have been herein described and illustrated in order to explain the nature of the invention, may be made by those skilled in the art within the principle and scope of the invention as expressed in the appended claims.

ABSTRACT

A water jet propulsion apparatus having an engine producing an exhaust gas, a pump driven by the engine, a nozzle in fluid communication with the pump, and an exhaust passageway communicating between the engine and the nozzle is disclosed. The exhaust passageway is connected the nozzle at a point in the nozzle where the water flow velocity is being increased, and prior to the water being expanded. By mixing the exhaust with the water while the water flow velocity is being increased, the result is a decrease the density of the mixture and an increase the total mass flow rate, thus resulting in increased thrust.

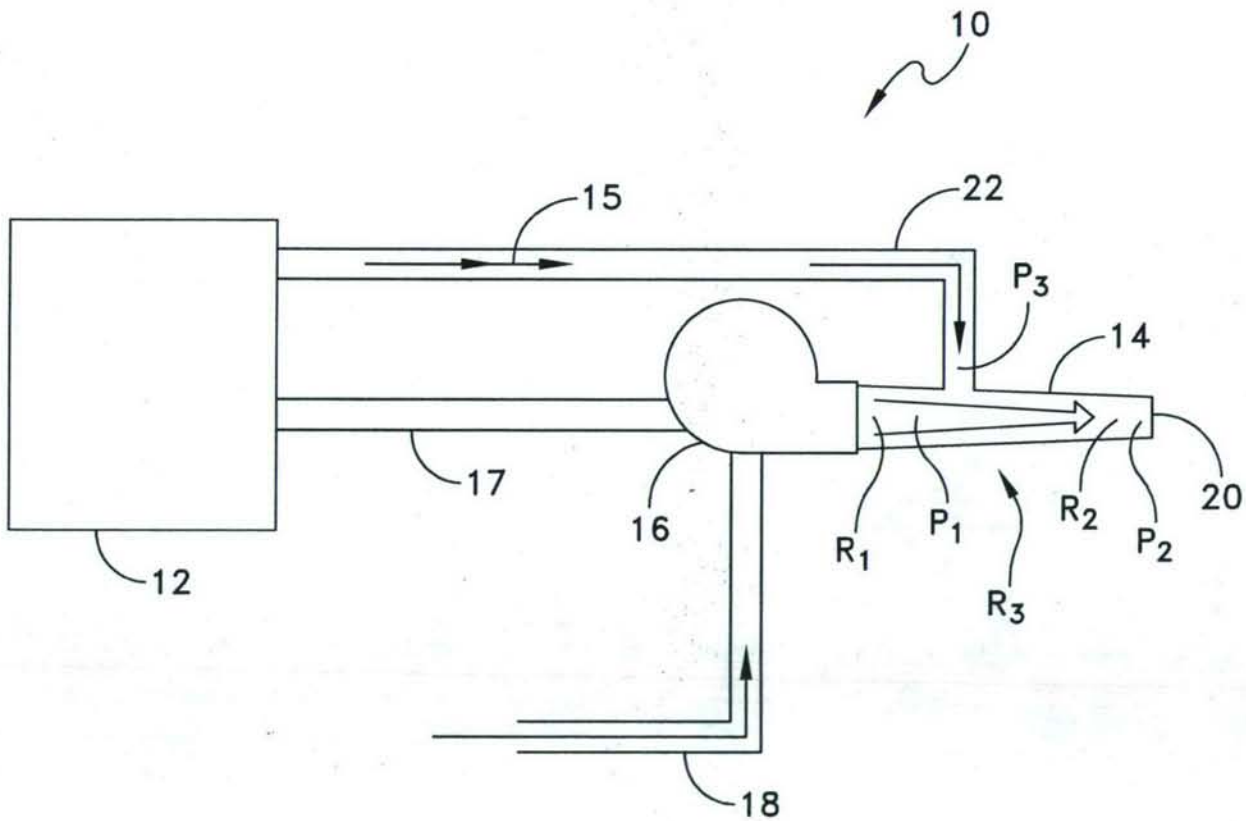

FIG. 1