430

AD707418

DDC
JUN 22 1970
B

Reproduced by the
CLEARINGHOUSE
for Federal Scientific & Technical
Information Springfield Va. 22151

Progress through Research

DYNATECH

152

Report No. 261

PRESSURE LOSS CALCULATION PROCEDURES FOR HIGH SPEED GAS FLOW IN DUCTS

Prepared by

J. R. Turner
T. R. Yoos

Approved by

L. C. Hoagland

Nobs-84282

Submitted to

U. S. NAVY
Bureau of Ships
Washington 25, D. C.

June 20, 1961

DYNATECH CORPORATION
639 Massachusetts Avenue
Cambridge 39, Massachusetts

BUR-1

This document has been approved for public release and sale; its distribution is unlimited.

TABLE OF CONTENTS

	Page
LIST OF PROCEDURES	iii
LIST OF DESIGN CHARTS	v
PREFACE	1
1.0 INTRODUCTION	3
2.0 INTRODUCTION TO PARAMETERS AND GENERAL METHODS OF COMPRESSIBLE FLOW	5
2.1 Mach Number	5
2.2 Total Pressure and Loss Coefficients	6
2.3 Total Temperature	9
2.4 Mass Flow Parameter and the Continuity Relation	10
2.5 Choking in Compressible Flow	12
2.6 Gas Properties	17
3.0 SOURCES AND METHODS EMPLOYED IN DEVELOPMENT OF CALCULATION PROCEDURES FOR DUCT LOSS CALCULATION	18
3.1 Straight Constant Area Ducts	18
3.2 Area Change	20
3.2.1 Abrupt Area Increase	20
3.2.2 Abrupt Area Decrease	21
3.2.3 Diffusers	22
3.2.4 Converging Duct (Nozzle)	26
3.3 Bends	26
3.4 Screens and Gratings	29

TABLE OF CONTENTS (cont'd)

		Page
4.0	CALCULATION PROCEDURES AND EXAMPLES	30
	4.1 Interpretation of Procedure Diagrams	30
	4.2 Examples	31
	4.3 Closely Coupled Components	32
P	PROCEDURES	33
D	DESIGN CHARTS	65
5.0	APPLICATION OF CALCULATION PROCEDURES TO A DUCT SYSTEM.	84
	5.1 Sample Duct Pressure Loss Calculation	89
	5.1.1 Intake Duct	89
	5.1.2 Exhaust Duct	94
	5.2 Effect of Pressure Loss on Turbine Performance	99
NOMENCLATURE		103
BIBLIOGRAPHY		107

LIST OF PROCEDURES

		Page
P-1	Mach Number	33
P-2	Straight Duct	
	2.1 Intake Duct	35
	2.2 Exhaust Duct	37
P-3	Duct Inlets, Simplified Procedure	
	3.1 Inlet Length with Bellmouth Entrance	39
	3.2 Inlet Length with Sharp-Edged Entrance, with or without screens at entrance	41
P-4	Abrupt Area Increase	
	4.1 Intake Duct	43
	4.2 Exhaust Duct	43
P-5	Abrupt Area Decrease	
	5.1 Intake Duct	45
	5.2 Exhaust Duct	45
P-6	Diffusers	
	6.1 Intake Duct	47
	6.2 Exhaust Duct	49
P-7	Bends	
	7.1 Intake Duct	51
	7.2 Exhaust Duct	53

LIST OF PROCEDURES (cont'd)

		Page
P-8	Screens and Gratings	
	8.1 Intake Duct	55
	8.2 Exhaust Duct	55
P-9	Duct Inlets, Alternate Procedure for Bellmouth Entrance	
	9.1 $L/D > 30$	57
	9.2 $L/D < 30$, test for procedure	59
	9.2.1 $L/D < \frac{x_{tr}}{D}$	61
	9.2.2 $\frac{x_{tr}}{D} < \frac{L}{D} < 30$	61
P-10	Duct Inlet, Alternate Procedure for Sharp-Edged Entrance	63

LIST OF DESIGN CHARTS

		Page
D-1	Mass Flow Parameter	
	(a) Computed from total pressure	65
	(b) Computed from static pressure	66
D-2	Reynolds Number, Re	67
D-3	Relative Roughness, $\frac{\epsilon}{D}$	68
D-4	Friction Factor, $4\bar{f}$ (fully developed)	69
D-5	Laminar Inlet Length Loss Coefficient, $4\bar{f} \cdot \frac{x}{D}$	70
D-6	Turbulent Inlet Length Friction Factor, $\frac{f_2}{\bar{f}}$	71
D-7	$4\bar{f} \frac{L\,max}{D}$ and $\frac{p_o}{p_o^*}$	72
D-8	Sharp-edged inlets	73
D-9	Abrupt area increase	74
D-10	Abrupt area decrease	75
D-11	Diffuser Loss Coefficients	76
D-12	(a), (b) Circular Cross-section Bends, Loss Coefficients	77
	(c), (d) Square Cross-section Bends, Loss Coefficients	78
D-13	(a) Round Wire Screens	79
	(b) Sharp-edged Gratings	80

LIST OF DESIGN CHARTS (cont'd)

	Page
D-14 Loss Coefficient, C_{p_o} vs $1 - \frac{p_{o2}}{p_{o1}}$	81
D-15 Bend Angle Loss Factor	83

PREFACE

The primary purpose of this report is to fulfill the contract requirement for a set of design data sheets, similar in form and application to Buships Design Data Sheet DDS 3801-2, but for calculation of pressure losses at high gas velocities in gas turbine ducting. This purpose is accomplished in the design charts and design procedures found in Sections 4 and 5. These have been prepared in such form that they may be extracted from the other sections of the report to form a self-contained set of procedures and data necessary to the calculation of high speed ducting losses, and so contain the necessary elements for a Design Data Sheet.

As we assembled the material necessary for the required procedural and data sections, we realized that this report would be of more value to those who are ultimately responsible for preparation and the periodic revision and improvement of the Design Data Sheets and perhaps more valuable to the informed user, if two more sections were to be included in the report:

(1) A brief introduction to the parameters and general methods of compressible (high speed) flow. The calculation procedures, and the governing flow parameters, are in most cases quite different from those met in calculating incompressible (low speed) duct flows. We hope that the short introduction included as Section 2 of the report will be helpful to those who are primarily familiar with the methods of incompressible flow calculations, in understanding the procedures recommended in this report, and in appreciating some of the reasons for their complexity when compared to incompressible methods.

(2) Some notes on the data sources and methods that were employed in the preparation of the design charts and the procedures. Our survey of the data available in the literature on compressibility (high speed) effects in duct flows showed that there are many areas where data is incomplete or inconclusive, and in fact sometimes conflicting. This is also true to a lesser extent of the available data on incompressible duct flows from various sources. This situation resulted in the necessity, in preparing the final charts and procedures which are our recommendations for calculation, of applying our judgement in choosing data sources; of generalizing from incomplete data; and of calculating from theoretical analysis, to extend existing data or methods (e.g., the analysis for abrupt area decrease in Section 3.2.2).

We have attempted to make the design charts and calculation procedures as complete as possible. This means that, in some cases, where data is incomplete or inconclusive, we have made for the designer the decisions and judgements that would confront him, if he were working from the basic data available. Under these circumstances, we have felt it would be useful to include in our report some specific indications of the sources and methods which led to our recommendations. We hope that these notes will be useful if a critical review is made of these methods at some later time when, presumably, more high speed duct flow data will be available in the literature. These notes on methods and sources we have included as Section 3 of the report.

James R. Turner
Project Manager

Approved by: _____

L. C. Hoagland

1.0 INTRODUCTION

Shipboard gas turbine inlet and exhaust ducting is presently designed for low speed gas flows, of the order of 100 ft/sec and less. For these velocities, ducting pressure losses may be estimated with negligible error by employing the assumption that the gas is an incompressible fluid. This assumption implies that density variations are small and can be ignored in calculation methods. Pressure loss calculation methods for low speed flows based in incompressible assumptions have been collected and formalized in Reference 1.

If it is desirable to design inlet and exhaust ducting for higher flow velocities, and thus obtain ducting of smaller diameter, the losses may no longer be estimated by the assumptions of incompressible flow. At high subsonic gas velocities, above about Mach Number 0.2, the magnitude of the density changes accompanying the pressure changes due to accelerations, decelerations, and losses should not be ignored in calculation. Furthermore, the loss coefficient characterizing the pressure loss in each ducting component, usually expressed as a fixed percentage of the velocity head for a component of given configuration in incompressible flow, generally depends also on the flow velocity (or Mach Number) in high speed flows. The presentation of a calculation procedure for high speed duct flows therefore requires two extensions of low speed calculation procedures:

1. Formulation of a calculation procedure which will take into account the effects of compressibility on local values of flow parameters (pressure, density, velocity, etc.)

2. Correlation of available data on the effect of compressibility on the pressure losses, or loss coefficients which characterize the pressure losses, in various duct components.

This report describes a calculation system which permits the calculation of ducting losses for high speed flows. In the following sections the methods and data sources employed are described, and a system is devised for application to duct pressure loss calculations. This system has been reduced to a series of charts for computational aid. These charts are included in a separate section of this report and are arranged so that they may be extracted from the report to form a self-contained calculation system similar in form and intent to the material of Reference 1. Although the system is not as simple in form and application as the incompressible procedures, they represent, in our opinion, the simplest calculation procedures which can be applied to high speed flow calculations.

2.0 INTRODUCTION TO PARAMETERS AND GENERAL METHODS OF COMPRESSIBLE FLOW

Accounting for gas compressibility effects in the calculation of ducting pressure losses, necessary for high speed duct flows, introduces several new variables into the calculations. Rather extensive changes to incompressible flow methods and procedures must be made. The purpose of this section is to provide a brief outline of parameters and methods employed in this report which are peculiar to compressible flow calculations. Those analytical relations developed which are important to the calculation procedure have been reduced to chart form in later sections.

2.1 Mach Number

The Mach Number is the basic measure of the relative importance of compressibility effects. The Mach Number is the ratio of the fluid velocity to the local speed of sound:

$$M = \frac{V}{c}$$

where

V = fluid velocity

c = local speed of sound $= \sqrt{g_o k RT}$

Only subsonic duct velocities (i.e., $M < 1.0$) have been considered. For Mach Number $M < 0.2$, compressibility effects are small, and incompressible calculation methods can be applied with sufficient accuracy.

Shapiro (Reference 2) and others have shown that most compressible flow calculations are most easily carried out if the calculation methods are formulated in such a way that Mach Number is the independent variable of the calculation procedure. For many of the pressure-loss calculations which follow, the Mach Number has therefore been chosen as the independent variable. Generally, losses in ducting components which do not involve area change cause the Mach Number to increase. Therefore, it is possible that in a long ducting system, incompressible calculation methods may be appropriate in sections near the inlet, with compressible methods becoming necessary as the Mach Number increases.

2.2 Total Pressure and Loss Coefficients

The total, or stagnation, pressure is defined as the pressure which a gas stream would reach if it were decelerated to zero velocity without incurring any losses in the deceleration. The total pressure is the pressure measured by a Pitot tube, or an "impact" probe. For incompressible flow, the total pressure is the sum of the static pressure and the velocity head.

$$p_o = p + \frac{\rho V^2}{2 g_o} \tag{2.1}$$

where

p_o = total pressure (impact probe pressure)

p = static pressure (pressure at a wall pressure tap)

ρ = fluid density

V = fluid velocity

The change in total pressure in a duct flow is a measure of the losses in the flow. The losses may be characterized by a dimensionless loss coefficient, Cp_o,

$$Cp_o = \frac{p_{o1} - p_{o2}}{\frac{1}{2}\frac{\rho_1 V_1^2}{g_o}} \tag{2.2}$$

where 1 and 2 represent an upstream and downstream station, respectively. For incompressible flow in a constant area duct,

$$\frac{\rho_1 V_1^2}{2 g_o} = \frac{\rho_2 V_2^2}{2 g_o} \tag{2.3}$$

and so,

$$p_{o1} - p_{o2} = p_1 - p_2 \tag{2.4}$$

That is, the difference in total pressure between two stations in the duct is equal to the difference in static pressure, so that the flow losses are described equally well by either total pressure change or static pressure change. This, however, is not true for a compressible (i.e., high speed) flow.

For a compressible flow, the simple relation between total pressure, static pressure, density, and stream velocity given by Equation 2.1 cannot be applied directly. This equation does not apply because the fluid density will change during the deceleration; that is, the density, ρ, in Equation 2.1 is not a constant. The relation corresponding to Equation 2.1 for compressible flow is best expressed in terms of the Mach Number:

$$\frac{p_o}{p} = \left(1 + \frac{k-1}{2} M^2\right)^{k-1/k} \tag{2.5}$$

where k = ratio of specific heats, a gas property.

The losses can be expressed as a change in total pressure in compressible flow; this change is not equivalent to the static pressure change, as in incompressible flow. The definition of loss coefficient, Equation 2.2, may be rearranged to more convenient form through the relation

$$\frac{1}{2g_o} \rho_1 V_1^2 = \frac{1}{2} k p_1 M_1^2 \tag{2.6}$$

so that,

$$C_{p_o} = \frac{p_{o1} - p_{o2}}{\frac{1}{2} k p_1 M_1^2} \tag{2.7}$$

Combined with Equation 2.5 this becomes

$$C_{p_o} = \frac{1 - \frac{p_{o2}}{p_{o1}}}{\frac{1}{2} k M_1^2 \left[1 + \frac{k-1}{2} M_1^2\right]^{1-k/k}} \tag{2.8}$$

Thus, if the loss coefficient, C_{p_o}, and the inlet conditions, M_1 and p_{o1}, are known for a given ducting component, the exit total pressure for that component can be determined from equation 2.8; the exit Mach number, M_2, is determined from continuity relations, as will be shown in Section 2.4. These exit conditions will, of course, become the inlet conditions for the following ducting component.

2.3 Total Temperature

The total, or stagnation, temperature is similar to the total pressure in definition. That is, it is the temperature which a gas stream would reach if it were decelerated to zero velocity. It is best expressed in terms of the Mach Number:

$$\frac{T_o}{T} = 1 + \frac{k-1}{2} M^2 \qquad (2.9)$$

where

T_o = total temperature (temperature of stream decelerated to zero velocity)

T = static temperature (temperature of the flowing gas stream)

Unlike the total pressure, however, the total temperature is unaffected by losses. In a duct flow, the total temperature can change only through heat transfer to or from the gas stream. Note, however, that the static temperature may vary considerably, as by acceleration or deceleration of the gas stream, according to Equation 2.9.

If we assume that heat transfer to the surroundings is negligibly small in a duct flow (i.e., the flow is adiabatic), the total temperature remains constant, irrespective of the flow losses. The assumption of adiabatic flow has been made in the calculation methods presented in this report. Therefore, for a gas turbine intake duct flow, the total temperature is the temperature of the atmosphere (i.e., the temperature of the inlet air when it was at zero velocity), and is constant throughout the inlet ducting; for a gas turbine exhaust duct flow, the

total temperature is determined by the exhaust condition at the turbine, and is constant throughout the exhaust ducting.

The assumption of adiabatic flow in the intake duct is quite accurate, since only small temperature differences exist between the duct flow and the surroundings. For the hot exhaust flow, the adiabatic condition is not so nearly achieved, though insignificant error is probably introduced for insulated ducting. To account for the effects of heat transfer to the surroundings in the exhaust duct flow would preclude any simple calculation method for the exhaust duct flow losses.

2.4 Mass Flow Parameter and the Continuity Relation

For incompressible flow, the continuity relation may be expressed as

$$m = \rho A_1 V_1 = \rho A_2 V_2 . \qquad (2.10)$$

Since density is constant between any two sections, the velocity will change only by virtue of an area change. In a compressible flow, however, velocity changes (and thus changes in Mach Number) can occur in a constant area duct, because of changes in density resulting from pressure losses. Thus, the continuity relation must be applied along with the loss relations to determine Mach Number changes accompanying ducting component losses. For compressible flow, the continuity relation may be conveniently expressed as

$$\frac{m\sqrt{T_o}}{p_o A} = 0.532\, F(M) \qquad (2.11)$$

where the constant 0.532 applies for a gas of $k = 1.4$ and molecular weight of 29. The function of Mach Number, $F(M)$, is

$$F(M) = \frac{M}{\left[\left(\frac{2}{k+1}\right)\left(1 + \frac{k-1}{2} M^2\right)\right]^{k+1/2(k-1)}} \qquad (2.12)$$

This function is the reciprocal of the function A/A^* tabulated in Table 30 of Reference 3.

For an adiabatic duct flow (T_o = constant), the continuity equation becomes, with $m_1 = m_2$,

$$p_{o1} A_1 F(M_1) = p_{o2} A_2 F(M_2) \qquad (2.13)$$

Thus, for a given duct component, with fixed area ratio, the exit Mach Number, M_2, may be found if inlet conditions p_{o1} and M_1 are known, and the ratio p_{o2}/p_{o1} is known from loss coefficient data (see Section 2.2).

Equation 2.11 gives a convenient way to determine the Mach Number for a duct flow when mass flow, area, total pressure, and total temperature are known.

The term

$$\frac{m\sqrt{T_o}}{p_o A}$$

is denoted the "mass flow parameter"; for a given gas this parameter depends on the Mach Number only. A similar parameter employing static pressure,

$$\frac{m\sqrt{T_o}}{p A}$$

can also be determined as a function of Mach Number. These parameters are plotted vs. Mach Number in a later section, to give a simple

computational aid in determining Mach Number when other flow conditions are specified.

2.5 Choking in Compressible Flow

The mass flow rate in a duct flow of compressible gas is limited by the phenomenon of "choking". This may be explained by the following considerations.

Consider a simple ducting component which has a continuous area change (e.g., a nozzle), with specified areas

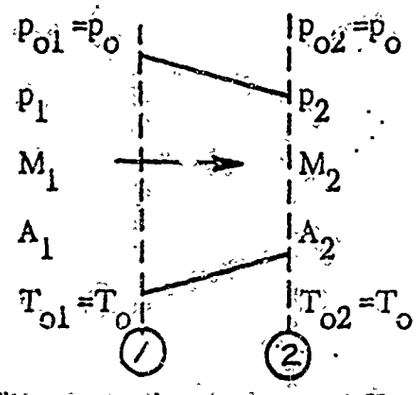

A_1 and A_2, and flow at total temperature T_o. If we assume that there are no losses, $p_{o1} = p_{o2} = p_o$. Let us first hold the upstream total pressure, p_{o1}, constant and continuously reduce the downstream static pressure, p_2. From Equation 2.5

$$\frac{p_{o2}}{p_2} = \left(1 + \frac{k-1}{2} M_2^2\right)^{k-1/k} \qquad (2.14)$$

the Mach Number M_2 will increase as static pressure p_2 is reduced. The effect on mass flow rate is determined through Equation 2.11,

$$\frac{m\sqrt{T_o}}{p_o A_2} = 0.532\, F(M_2) \qquad (2.15)$$

and Equation 2.12,

$$F(M) = \frac{M}{\left[\frac{2}{k+1}\left(1 + \frac{k-1}{2} M^2\right)\right]^{k+1/2(k-1)}} \qquad (2.16)$$

Sketch 1 shows the variation of F (M) with Mach Number. As M is increased, F (M) increases to

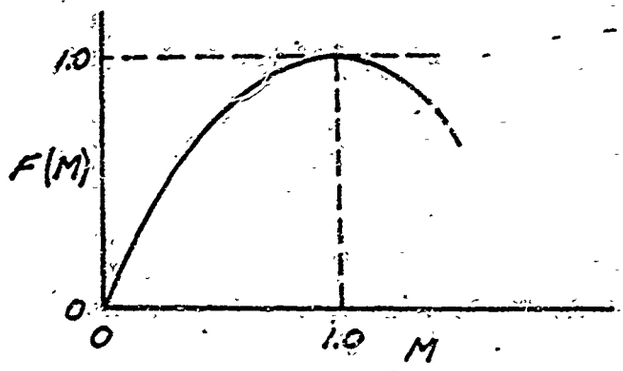

Sketch 1

a maximum value at M = 1.0, and then decreases. Thus, for our example, as the pressure p_2 is decreased, M_2 will increase and the mass flow rate will increase until a Mach Number $M_2 = 1.0$ is reached, at which condition the flow will be a maximum. This occurs at a value of $p_{o2}/p_2 = 0.528$, for a gas with $k = 1.4$. It can be shown that the Mach Number cannot pass through $M_2 = 1.0$ to supersonic values in the minimum area A_2*. Thus, as the pressure p_2 is further reduced, the value of M_2 remains at unity, and the mass flow rate remains constant. This maximum value of flow rate is the "choked" flow rate. The

*See Reference 2, Chapter 4 for a rigorous explanation of this limitation.

variation of flow rate with downstream static pressure, p_2, at a constant upstream total pressure p_o is thus shown by Sketch 2.

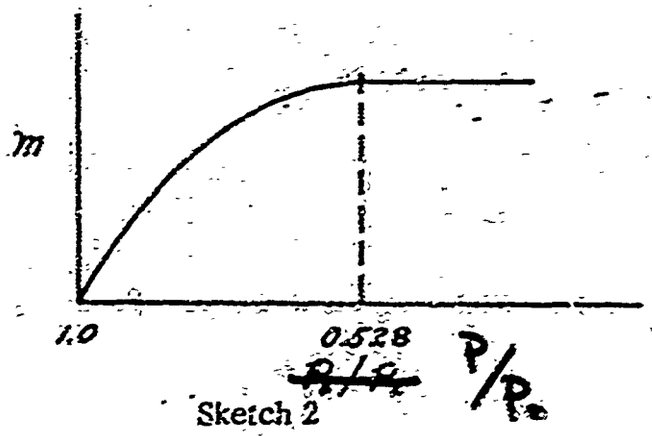

Sketch 2

Note that when the choked flow condition ($M_2 = 1.0$) is attained, the inlet Mach Number, M_1, also has a definite value which is fixed by the area ratio A_2/A_1. From Equation 2.13, at $M_2 = 1.0$, $F(M_2 = 1.0) = 1.0$ and $p_{o2} = p_{o1} = p_o$

$$F(M_1) = \frac{p_{o2}}{p_{o1}} \frac{A_2}{A_1} F(M_2) \tag{2.17}$$

Therefore,

$$F(M_1) = \frac{A_2}{A_1} \tag{2.18}$$

Thus, for this duct component, there is a limiting value of inlet Mach Number, M_1, which cannot be exceeded due to the "choking" phenomenon.

If we now assume that there is a total pressure loss in the above nozzle, then $p_{o2}/p_{o1} < 1.0$, and the inlet Mach Number at the choked condition is given by

$$F(M_1) = \frac{p_{o2}}{p_{o1}} \cdot \frac{A_2}{A_1} \tag{2.19}$$

Reference to Sketch 1 will show that the limiting inlet Mach Number will now be lower than for the nozzle without losses, since $F(M_1)$ is smaller by the ratio p_{c2}/p_{o1}. Thus, the limiting inlet Mach Number due to choking for a duct component is influenced (1) by area change and (2) by losses; either of these influences may cause a choked condition at the exit, with an inlet Mach Number less than unity. For example, a straight constant-area duct with frictional losses will choke at an inlet Mach Number less than unity, with the choking value of inlet Mach Number depending on the duct length, diameter, and wall roughness; a constant-area bend likewise will choke at an inlet Mach Number less than unity because of losses in the bend.

The practical significance to the duct system designer can be illustrated by an example. Suppose that we wish to design a minimum size, constant area inlet air duct for a gas turbine. The air is to be drawn from atmospheric conditions, so that p_{o1} and T_o are fixed;

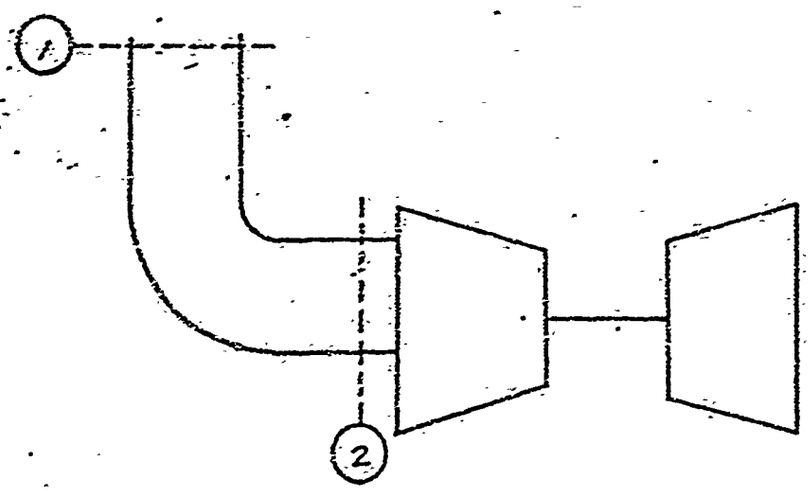

Sketch 3

the required turbine mass flow, m, will be specified. Equation 2.11 gives

$$\frac{m\sqrt{T_o}}{p_o A} = 0.532 \; F(M) \qquad (2.11)$$

Let us suppose first that the inlet duct is so short that losses will be completely negligible. Then p_o, T_o, and m are all specified, and the minimum area duct will occur at the maximum value of the mass flow parameter, $m\sqrt{T_o}/p_o A$. This corresponds to the maximum value of F(M), which in turn occurs at M = 1 (also F(M) = 1.0), the choked condition. Thus, the minimum area duct is determined by

$$\frac{m\sqrt{T_{o1}}}{p_{o1} A} = 0.532 \qquad (2.20)$$

when the specified values of m, T_o, and p_o are inserted. If a duct any smaller than this were used, the specified mass flow would not be attained, regardless of how low the gas turbine compressor reduced the pressure at the duct exit.

If we now allow a long inlet duct in which losses are not negligible, then $p_{o2} < p_{o1}$. Since M_2 cannot exceed unity (and $F(M_2)$ cannot exceed unity), the maximum mass flow parameter becomes

$$\frac{m\sqrt{T_{o1}}}{p_{o2} A} = 0.532$$

Since p_{o2} is less than p_{o1}, the duct area required to admit the specified flow becomes larger than for the short inlet duct, because of the duct losses. The limiting inlet Mach Number will be smaller than unity.

Near choking, duct component losses generally become so large that it is not practical to design for choked or near-choked ducting. However, it is important to realize that regardless of how much pressure loss is allowable, there are minimum duct areas that will admit a specified mass flow at fixed inlet conditions (e.g., atmospheric conditions).

2.6 Gas Properties

All the relations of the calculation methods presented assume that the perfect gas equation of state,

$$p = \rho R T$$

is valid for the duct flows considered. In addition, the charts have been prepared for a gas with ratio of specific heats of 1.4, and molecular weight 29. These values will apply with sufficient accuracy to either atmospheric inlet air or gas turbine exhaust gases.

3.0 SOURCES AND METHODS EMPLOYED IN DEVELOPMENT OF CALCULATION PROCEDURES FOR DUCT LOSS CALCULATION

The data sources and correlation methods on which the calculation procedures presented in this report are based are outlined in this section. In some cases the available data is incomplete, so that approximations and extrapolations have been necessary; in some cases, data from various sources conflict, so that some judgment has been necessary in choosing data for procedures. Under these circumstances, it seems desirable to supplement the recommended calculation procedures with this outline of sources and methods.

3.1 Straight Constant Area Ducts

The procedures for straight ducts are based on the calculation methods developed by Shapiro, and others. These are developed in detail in Reference 2, and are a standard method for compressible flow calculation to include the effects of friction. The necessary compressible flow parameters for this calculation are plotted in Figure D-7.

Duct friction factors are taken from Moody, Reference 4, and charts are reproduced from this reference as Figures D-3 and D-4. Keenan and Neumann, Reference 5, show that there is no significant effect of compressibility on friction factor for subsonic flows, so that the friction factors of Moody may be applied without Mach Number correction.

The friction factors of Moody were determined in fully-developed duct flows and do not apply to flows in inlet lengths of ducting, within about 30 to 50 diameters of the duct entrance. In this entrance length, velocity profiles are not yet fully developed. Reference 7 shows that, for

an inlet length with a smooth entrance (e.g., a bellmouth), the flow is laminar until a length Reynolds Number, $Re_x \approx 10^6$, is attained ($Re_x = \rho V x/\mu$, x being the distance from the duct entrance). The theory of Langhaar, Reference 6, has been shown by Shapiro to predict the correct value of friction factor in this laminar region. Curves prepared from Langhaar's theory, taken from Reference 7, are reproduced as Figure D-5. At the duct length corresponding to $Re_x = 10^6$, a transition to turbulence occurs; Reference 7 presented data for friction factors in this turbulent region. The curves of Figure D-6 represent an average friction factor (calculated from curves faired through this data) to be applied in this turbulent inlet length. The friction factor in the turbulent inlet region is shown as a ratio to the friction factor for fully-developed turbulent flow at the same duct Reynolds Number ($Re = \rho V D/\mu$); this ratio is larger than unity. Therefore, losses are larger in an inlet length than in a fully-developed flow. If the duct entrance is not smooth, or if there is a screen in the entrance, Shapiro has shown that there is no laminar inlet length, but that the entire inlet flow length is turbulent. Thus, for such entrance conditions, the turbulent inlet friction factors of Figure D-6 should be applied to the entire inlet length.

Calculation procedures have been devised which take into account these special cases of inlet flow lengths and determine the appropriate friction factors according to the above considerations. These are presented as procedures P-9 and P-10. Inspection of these procedures will show that they are complex and lengthy. For this reason, a simpler approximate procedure for inlet length calculations has been prepared, procedure P-3. This approximate procedure employs the fully-developed flow friction factors of Moody, and will underestimate the friction losses. It has been recommended for use in the duct calculation method,

however, because the improved accuracy of the more complex methods is not generally warranted for duct system calculations, because of the uncertainties in the loss calculations of other duct system components. If, however, a duct system consists primarily of straight runs of ducting, or if the designer judges the improved accuracy desirable, the more accurate procedures P-9 and P-10 can be used.

The losses for bellmouth entrances incorporated in these procedures have been estimated from the data of Henry, Reference 8. The losses for sharp-edged inlets, and for inlets with screens and gratings, have been computed by a method similar to that described in the section on abrupt area decrease, incorporating an extrapolation of the data for contraction coefficients, Reference 12.

3.2 Area Change

3.2.1 Abrupt Area Increase

A calculation method for prediction of losses in subsonic flows through an abrupt area increase ("sudden expansion") has been developed by Hall and Orme, Reference 9. These authors have verified their calculations by experiment over a range of area ratios from 4 to 30, at entering Mach Numbers from 0.25 to 1.0. Cole and Mills, Reference 10, have confirmed the method by experiment in the area ratio range from 1 to 4. This analytical method has been applied here to the calculation of total pressure losses and Mach Number change, and results are plotted in the design charts of Figure D-9.

The experimental data of Hall and Orme indicate that the total pressure loss and Mach Number change take place in a mixing length of 4 diameters downstream of the sudden area change. In the calculation procedure, the total pressure loss attributed to the area change is therefore taken to include the loss of 4 diameters of downstream duct. In the calculation of losses in other ducting components in which the loss is attributable to a separation and subsequent mixing of the flow (e.g. sudden contractions, screens, sharp-edged entrances, etc.), the total pressure loss and Mach Number change attributed to that component have likewise been taken to include 4 downstream duct diameters, on the basis of the experimental evidence of Hall and Orme (and others, e.g., Reference 13), unless some data to the contrary has been available for that component.

3.2.2 Abrupt Area Decrease

Apparently, the problem of compressible flow through abrupt area decreases has not been previously considered in the open literature. An analysis has therefore been developed according to the model for incompressible flow suggested in Reference 11.

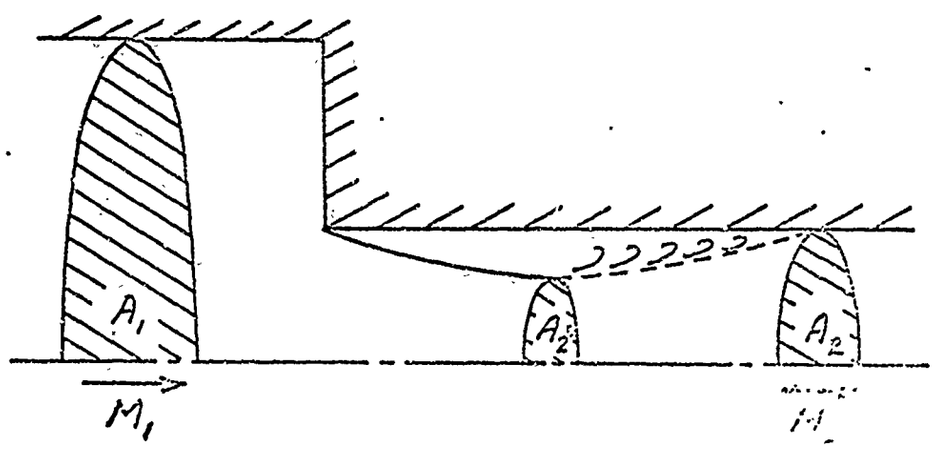

Sketch 1

As shown in Sketch 1, the flow is assumed to separate from the sharp corner of the area change to produce a free streamline flow, contracting to the streamtube area, A_2''. Turbulent mixing then occurs between sections 2" and 2 until the flow fills the area A_2, at essentially constant velocity across the duct cross-section. The flow from section 2" to 2 is treated as an abrupt area increase, as described in Section 3.2.1. The area A_2'' must be related to the known areas, A_1 and A_2, by experiment, since there is no analytical method for prediction. Values of area ratio A_2''/A_2 have been taken from the data correlations of Reference 12, which gives the area ratio A_2''/A_2 as a function of A_2/A_1 and inlet Mach Number, M_1.

The results of this analysis are presented in Figure D-10 which shows exit Mach Number and total pressure ratio as a function of area ratio and inlet Mach Number. Total pressure loss and Mach Number change include 4 diameters of downstream ducting. Although pressure losses are small, note that moderate area changes produce large increases in Mach Number, so that only small area decreases can be afforded in high speed flows.

3.2.3 Diffusers

Although a large amount of literature describing diffuser investigations is available, correlations of these data have as yet produced no systems for diffuser design or loss calculation that are entirely satisfactory. Available correlations of performance have been formulated on the basis of diffuser geometry alone. Various investigations have shown, however, that there can be substantial effects of Reynolds Number, inlet boundary layer thickness (i.e., inlet velocity profile), compressibility, and discharge duct geometry.

However, there is not sufficient data yet available to include such effects in a general correlation, so that we must rely on correlations of performance with geometry alone. Such correlations exhibit considerable scatter of the data, because of the influence of the effects noted above, and so are subject to some uncertainty in calculation.

The most complete correlation available in the open literature is that of Patterson, Reference 13. The design curves of design chart D-11 of this report, taken from the correlations of Patterson, are recommended for determination of incompressible flow losses in conical diffusers.

Various schemes have been proposed for correlating rectangular diffusers with conical; the method recommended here is to assume the loss in a diffuser of rectangular cross-section to be that of an equivalent conical diffuser circumscribed about the rectangular diffuser, as in the following sketch.

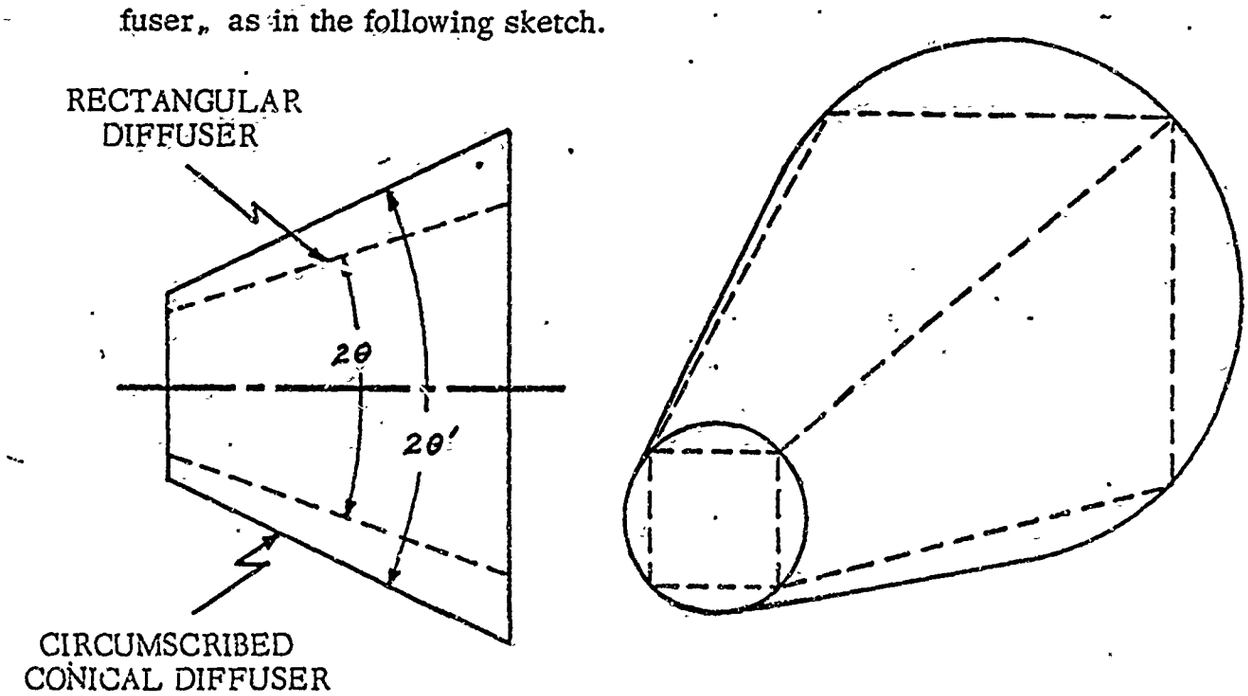

High speed flow effects on diffuser performance are shown by Little and Wilbur, Reference 15, and by Young and Green, Reference 14, for several conical and rectangular diffusers. Correlations from the data of these investigators have been made, and are shown on design chart D-11 for use as correction factors to the incompressible loss coefficients. These correlation curves are based on data from only a few diffuser geometries, and should be considered to be subject to revision if more data becomes available in the future. The effects of increasing Mach Number on performance of a diffuser with a fixed inlet boundary-layer condition has been shown in Reference 15 to be smaller than the effect of increasing inlet boundary thickness at a fixed Mach Number. Such results as these indicate that there will be considerable uncertainty in diffuser loss calculations. The recommendations in the curves of D-11 simply represent the best correlations presently possible from existing data sources. Referring to the Mach Number correction curves, note that the total pressure loss for conical diffusers begins to increase markedly at entering Mach Numbers of 0.4 to 0.5; choking occurs in the range of 0.6 to 0.7. Although rectangular diffusers do not show as marked an increase in loss with increasing Mach Number, the incompressible losses are much larger than for conical diffusers; thus, the total loss always is larger than for comparable conical diffusers.

The following remarks will serve as a guide to the designer:

1. An angle between diverging walls of about 6° - 10° gives best diffuser performance.

2. For a given area change per unit length of duct, diffusers of circular cross-section give the best effectiveness, with square cross-sections next.

3. The inlet velocity distribution has been shown to affect diffuser performance (e.g., Reference 15). A velocity distribution with a thin boundary layer at diffuser entrance gives better diffuser performance than a thick entry boundary layer, with losses differing by as much as 200% between the two cases. Although little can be done in a ducting system to control boundary layer thickness, this effect indicates that better diffuser performance can be expected for a diffuser relatively near the duct system inlet (less than 30 diameters) than would be expected after sufficient length for fully-developed flow to be established; and that a diffuser following a bend, or some similar component which may generate a thick or separated boundary layer, will have relatively poorer performance.

4. Complete pressure recovery is not realized at the exit of the diffuser; about 4 to 6 exit duct diameters downstream of the exit are required for complete recovery.

5. For most commonly used area ratios, (up to about 6:1) an abrupt area increase results in less total pressure loss than a diffuser with wall angle, 2θ, greater than $40^{\circ} - 50^{\circ}$.

6. Total pressure loss increases with increasing inlet Mach Number; the effect is more severe with large wall angles and also with thick entry boundary layers.

7. Various schemes such as boundary layer control by suction, injection, and vortex traps, and delay of flow separation by curved walls, have been devised to improve diffuser performance. Vanes have been used to stabilize the flow and thus improve performance.

These possibilities have not been considered in this study, since no definitive design rules can be laid down and the final design must result from testing to determine empirically an optimum configuration.

3. When space limitations would require a diffuser with large wall angle, it is often more desirable to employ an efficient diffuser (wall angle, 2 θ, of about 10°) followed by an abrupt area increase to the desired area.

3.2.4 Converging Duct (Nozzle)

Losses in converging ducting are small compared to those in diverging ducting (diffusers) because the accelerating flow in a converging duct presents a favorable pressure gradient for the wall boundary layer. For small cone angles (i.e., less than 30° included angle) there are generally no separation-mixing losses. There is little information available in the literature on Mach Number effects in converging sections with downstream ducting; most available data deals with nozzles exhausting to a large chamber or atmosphere. Therefore, it is recommended that converging ducting with included cone angle smaller than 30° be treated as straight ducting, with L/D computed on the smaller diameter of the converging section. For included angles greater than 30°, it is recommended that the procedure for abrupt area decrease be applied to converging sections.

3.3 Bends

Loss data for bends are shown in design chart D-12, in the form of a low speed (incompressible) flow loss coefficient, and a Mach Number

correction for high speed flow. The low speed loss coefficients have been adapted from the correlation of Henry, Reference 8. Mach Number corrections have been computed from the data of Young, Reference 16, and Higginbotham, Reference 17.

Few investigators have determined bend losses experimentally for high speed subsonic flows. Some general trends, however, are apparent from the results available. Data of References 16 and 17 show that bends of circular cross-section tend to choke at an inlet Mach Number of about 0.7-0.75. Near this critical Mach Number, loss coefficients increase rapidly. Bends of square cross-section tend to choke at a lower inlet Mach Number, about 0.6-0.7, and exhibit similar increases in loss coefficients. Loss coefficients for bends depend to some extent on inlet velocity distribution (boundary layer thickness), but this effect is apparently smaller than that of compressibility, contrary to the results for diffusers.

No data has been found in the literature for Mach Number effects in high speed flows in constant area bends with turning vanes. Reference 18 reports the results of a study of a vaned bend of rectangular cross-section with an area increase of approximately 50% (diffusing bend), for Mach Numbers from 0.15 to 0.40. These results show that the loss coefficient for such a bend is as low as 15% of the loss in a constant area bend without vanes, with the loss coefficient increasing with Mach Number, about 30 to 40% greater at M = 0.5 than the incompressible loss. This percentage increase in loss coefficient with Mach Number is approximately the same as the percentage increase for a bend without vanes. This data, and the data of Henry, Reference 8,

show that large reductions in bend loss coefficients are possible by employing vanes. The vanes to which these data apply, however, are airfoil sections (see respective References for design information), and apparently require considerable sophistication in design technique to achieve low losses. For such vanes, the per cent increase in loss coefficient with Mach Number is apparently of the same order as for bends without vanes.

For bends with simple "splitters" (i.e., vanes which are not of airfoil shape), it is recommended that the incompressible loss coefficients from DeShips Design Data Sheet, Reference 1, be applied in conjunction with the Mach Number correction curves for bends without vanes. There is no specific data to support this procedure, except the indications from Reference 18 that percentage changes in loss coefficient with Mach Number are of the same order, regardless of whether the bend has vanes or not.

The proper method of computing ducting components which are close-coupled is suggested by some observations reported by Young and Green in Reference 16. "Close-coupled" components refers to two adjacent ducting components, such as a bend followed by a diffuser, or a 90° bend followed by another bend, with less than 4 diameters of straight duct separating them. For such component arrangements, it is recommended in the calculation procedures that follow that the inlet Mach Number to the second component be considered the same as the inlet Mach Number to the first component. This recommendation is based on the following observations of Reference 16.

Young and Green have reported from visual observations (Schlieren photographs) of high speed bend flows that in the exit plane of the bend

there is an isentropic core flow in which the Mach Number is unaffected by losses in total pressure. In this exit plane, losses are concentrated in the low-energy fluid in a thickened boundary layer near the bend walls. This total pressure loss does not affect the Mach Number in the core flow until a distance of about 4 diameters downstream, when mixing of the core flow and the boundary-layer flow has been completed. From this, it appears that if one must choose a one-dimensional Mach Number to characterize the flow in the exit-plane of the bend (as is necessary for the calculation procedures), the proper choice is to assume the Mach Number unchanged from bend inlet plane to bend exit plane. Four diameters downstream of the bend exit, after mixing has occurred, the effect of the total pressure losses in the bend will be felt all across the duct and the one-dimensional Mach Number will have increased.

3.4 Screens and Gratings

The subsonic compressible flow through round-wire screens or gratings (screens of sharp-edged elements of any geometry) has been considered by Cornell, Reference 12. Cornell gives loss coefficients for such screens and gratings in duct flows, for various screen solidities (ratio of open area in screen to upstream duct flow area) and upstream duct Mach Number. These have been taken directly from Reference 12 and are included as design chart D-15.

The loss coefficients of Cornell do not apply to screens at the mouth of a sharp-edged (i.e., no bellmouth) intake duct. Cornell's calculations for sharp-edged screens have been extended for screens at the inlet of a sharp-edged entrance, based on an extrapolation of the data for contraction coefficients given in Figure 7 of Reference 12. Results are shown in design chart D-8.

4.0 CALCULATION PROCEDURES AND EXAMPLES

4.1 Interpretation of Procedure Diagrams

Calculation procedures for all ducting components are described graphically in the diagrams P-1 to P-10. These diagrams are to be interpreted according to the following examples, taken from procedure P-2.1.

1. Quantities which must be known as initial data for the calculation are shown in circles, e.g.

2. Quantities which are determined by the calculation are shown in boxes, e.g.

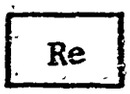

3. Directions for calculation are shown on lines connecting elements; e.g., the sequence

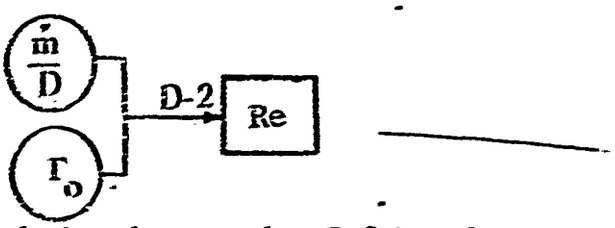

indicates that the design chart number D-2 is to be entered with quantities which are known as initial data, m/D and T_o, and Re is to be read from the chart. The sequence

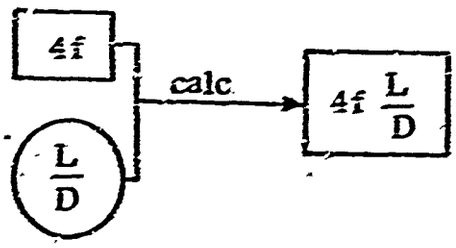

indicates that 4f, which is a result of previous calculation, and L/D, which is known as initial data, are to be combined by calculation to give 4f(L/D). Here, the equation required for calculation is obvious; i.e., 4f(L/D) = 4f x L/D. In cases where the equation is not obvious, it is included in the box containing the result, as in the sequence

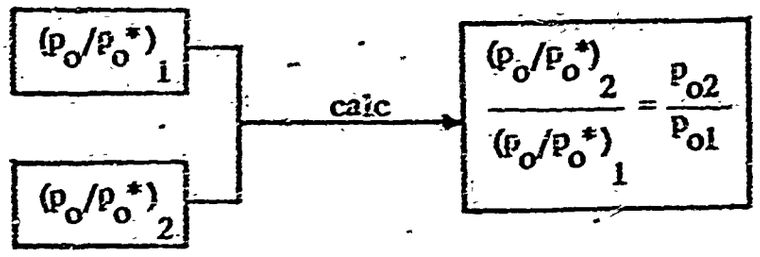

The result of the indicated calculation (i.e., the "output" of the box) is always shown on the right-hand side of the equation.

4. In some cases, alternate calculation procedures are indicated, as in the sequence (taken from procedure P-10).

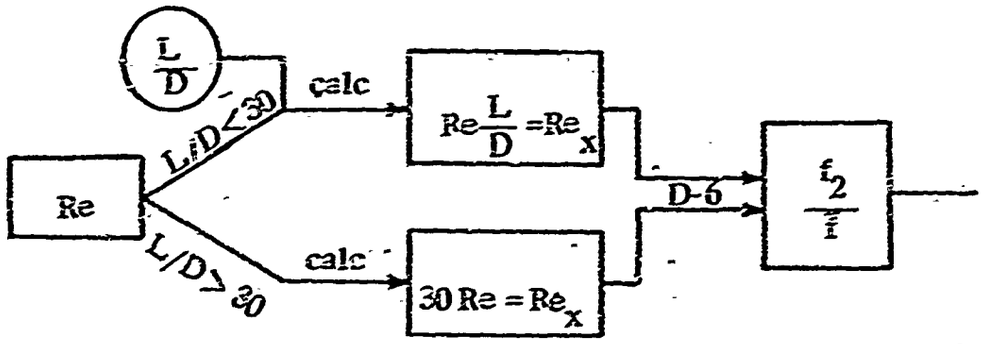

This diagram indicates that the upper path is followed if L/D <30 and the lower path if L/D ≥ 30.

4.2 Examples

Examples illustrating the use of each procedure diagram follow the diagram. Each box contains the numerical result of using the design charts or of calculation as prescribed by the procedure diagram.

4.3 Closely Coupled Components

Area changes, bends, and screens are assumed to be followed by 4 diameters of straight duct in which the flow mixes and stabilizes. When two components are not separated by 4 duct diameters, the calculation procedure is modified as follows:

1. The pressure loss of the first component is determined in the usual manner.

2. The pressure loss of the second component is determined by assuming the same entry Mach Number as employed for the first component. The pressure loss for the combined components is then

$$\left[\frac{p_{o2}}{p_{o1}}\right]_{1st\ component} \times \left[\frac{p_{o2}}{p_{o1}}\right]_{2nd\ component} = \left[\frac{p_{o2}}{p_{o1}}\right]_{Total}$$

3. The exit Mach Number for the combined components is determined by calculating the mass flow parameter at the exit of the second component,

$$\left[\frac{m\sqrt{T_{oi}}}{p_{o2}\,A_2}\right]_{exit} = \left[\frac{m\sqrt{T_{oi}}}{p_{oi}\,A_i}\right]_{entrance} \times \left[\frac{A_i}{A_2}\right]_{total} \times \frac{1}{(p_{o2}/p_{oi})_{total}}$$

Exit Mach Number is determined directly from this value of mass flow parameter through chart D-1a. This procedure is illustrated in Section 5 for a screen followed by a bend.

PROCEDURE P-1

MACH NUMBER CALCULATION

Total pressure known

$$\frac{m\sqrt{T_o}}{p_o A} \xrightarrow{D\text{-}1a} M$$

Static pressure known

$$\frac{m\sqrt{T_o}}{p A} \xrightarrow{D\text{-}1b} M$$

PROCEDURE P-1

MACH NUMBER CALCULATION

Total pressure known

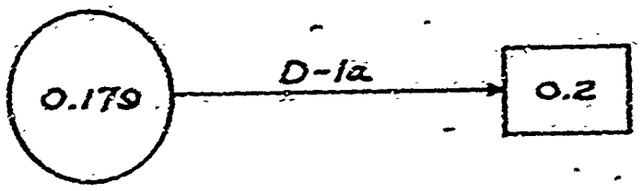

Static pressure known

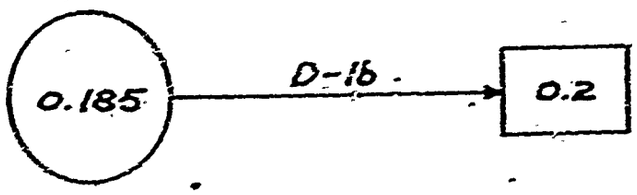

<u>Known:</u>

Mass Flow	$m = 12.8$ lb/sec
Total Temperature	$T_0 = 540$ R
Duct Diameter	$D = 1$ ft
Total Pressure	$p_0 = 14.7$ psi
Static Pressure	$p = 14.2$ psi

PROCEDURE P-2.1

STRAIGHT DUCT (INTAKE)

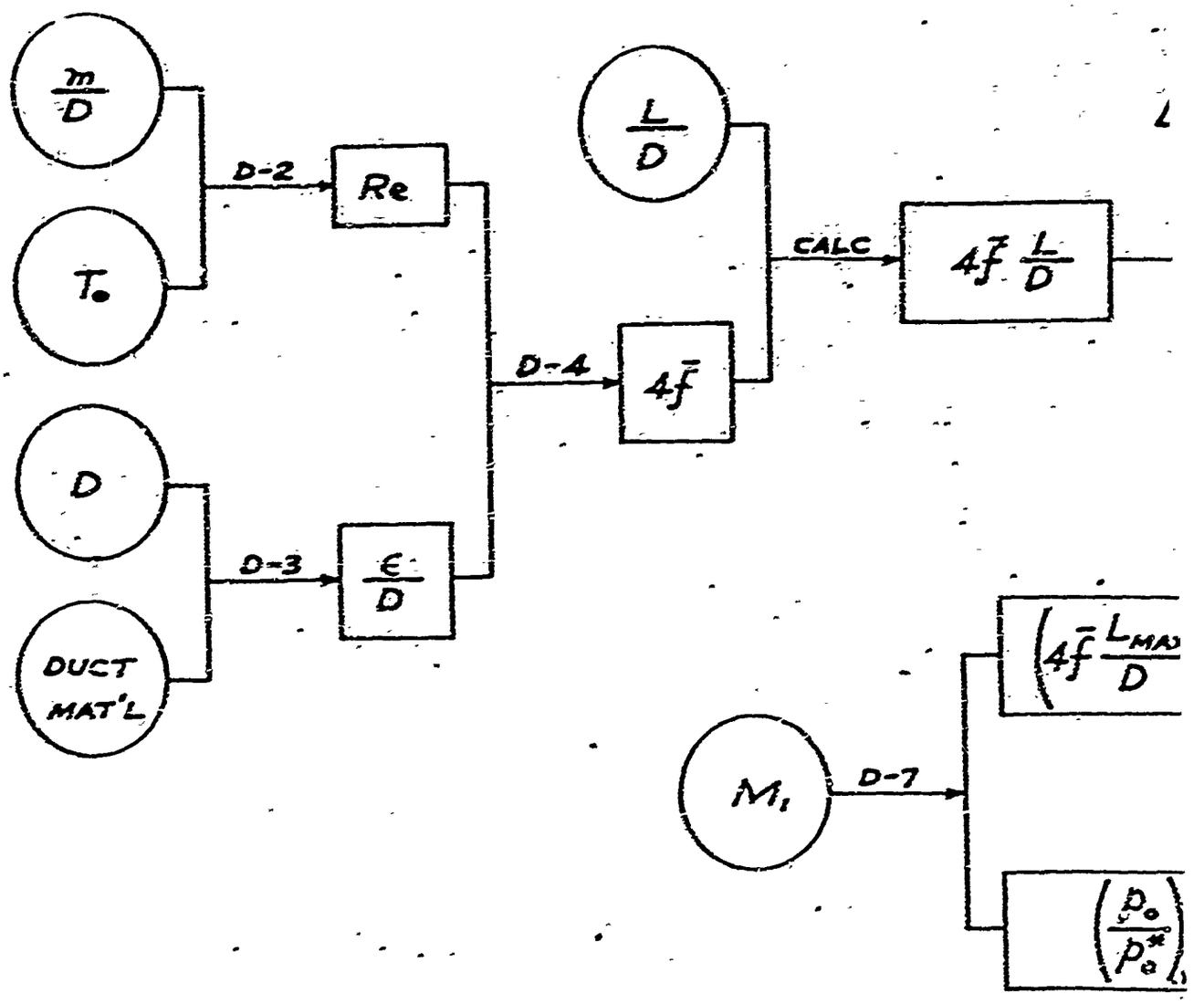

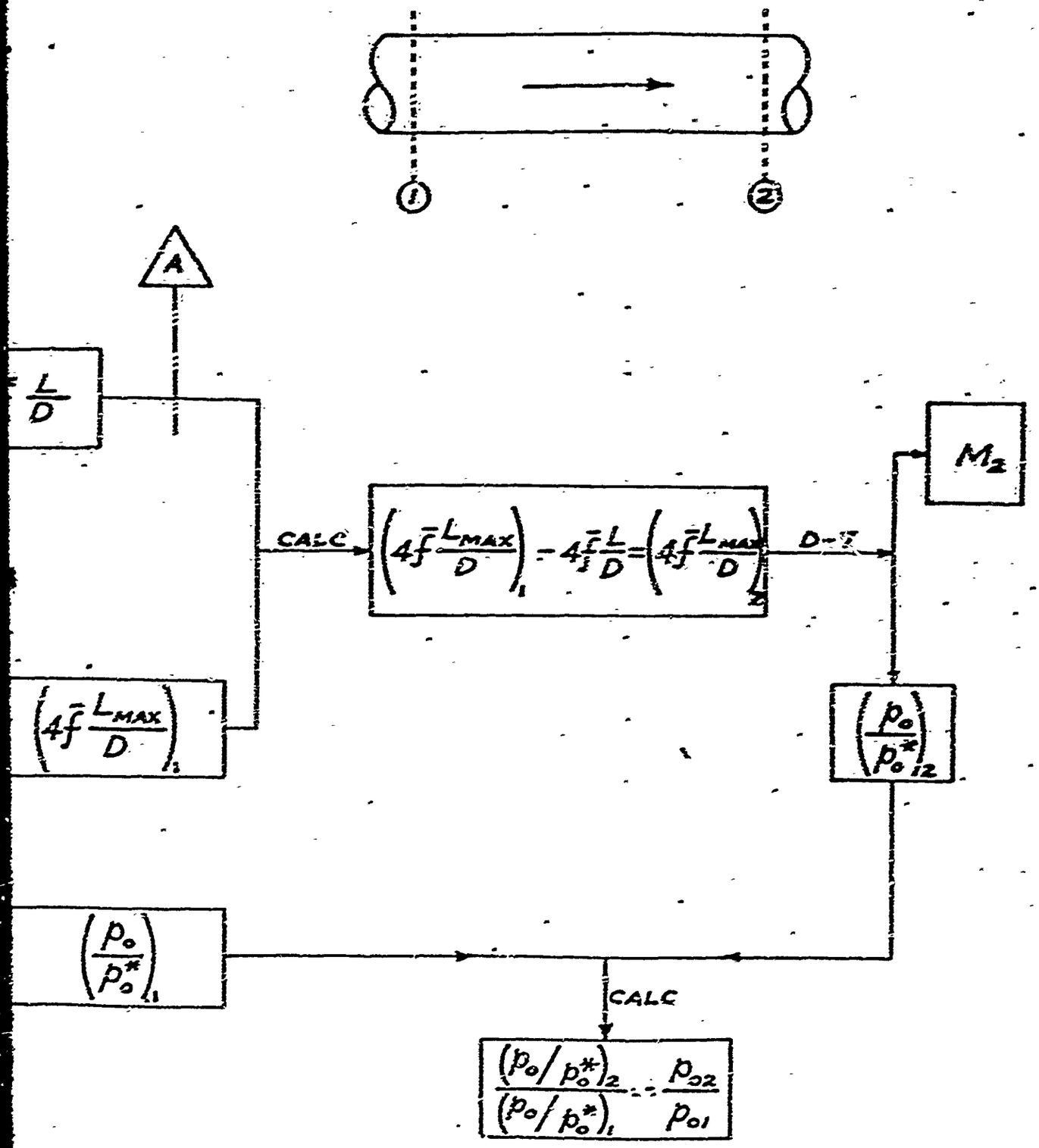
1
2
A
$\frac{L}{D}$
$\left(4\bar{f}\frac{L_{MAX}}{D}\right)_1$
CALC
$\left(4\bar{f}\frac{L_{MAX}}{D}\right)_1 - 4\bar{f}_1\frac{L}{D} = \left(4\bar{f}\frac{L_{MAX}}{D}\right)_2$
D-F
M_2
$\left(\frac{p_o}{p_o^*}\right)_{12}$
$\left(\frac{p_o}{p_o^*}\right)_1$
CALC
$\frac{(p_o/p_o^*)_2}{(p_o/p_o^*)_1} = \frac{p_{o2}}{p_{o1}}$

B

PROCEDURE P-2.1

STRAIGHT DUCT (INTAKE)

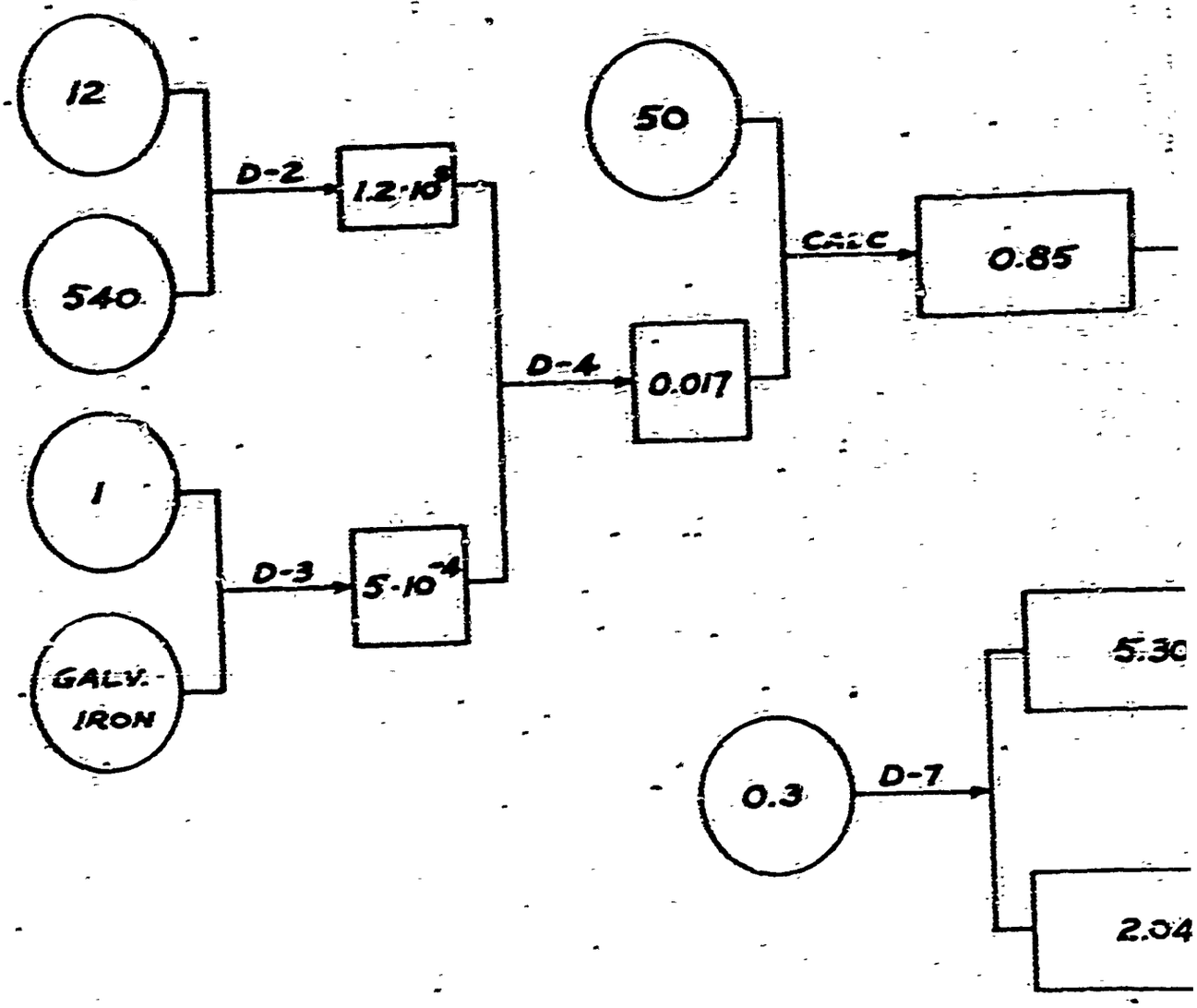

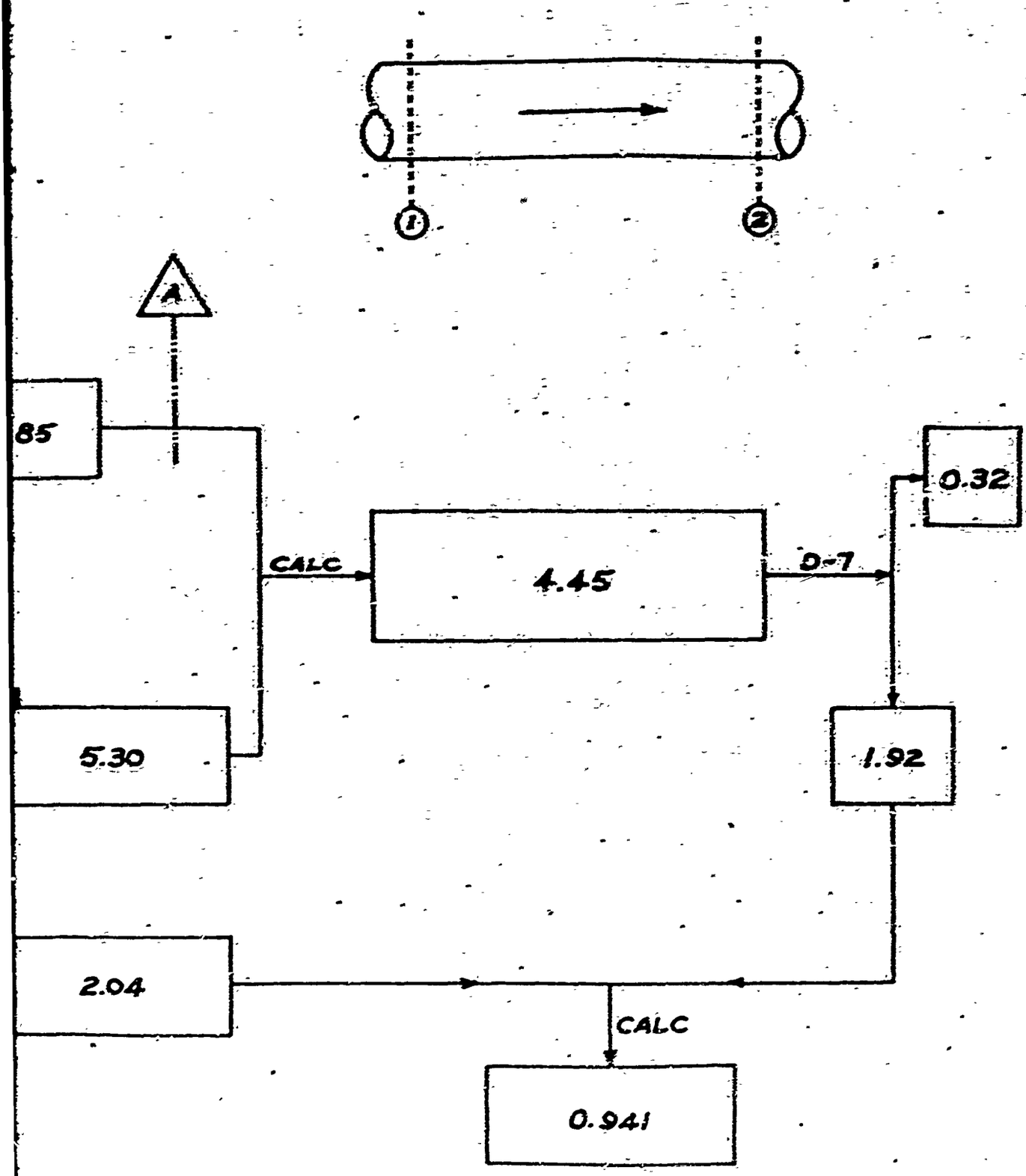

B

PROCEDURE F-2.2

STRAIGHT DUCT (EXHAUST)

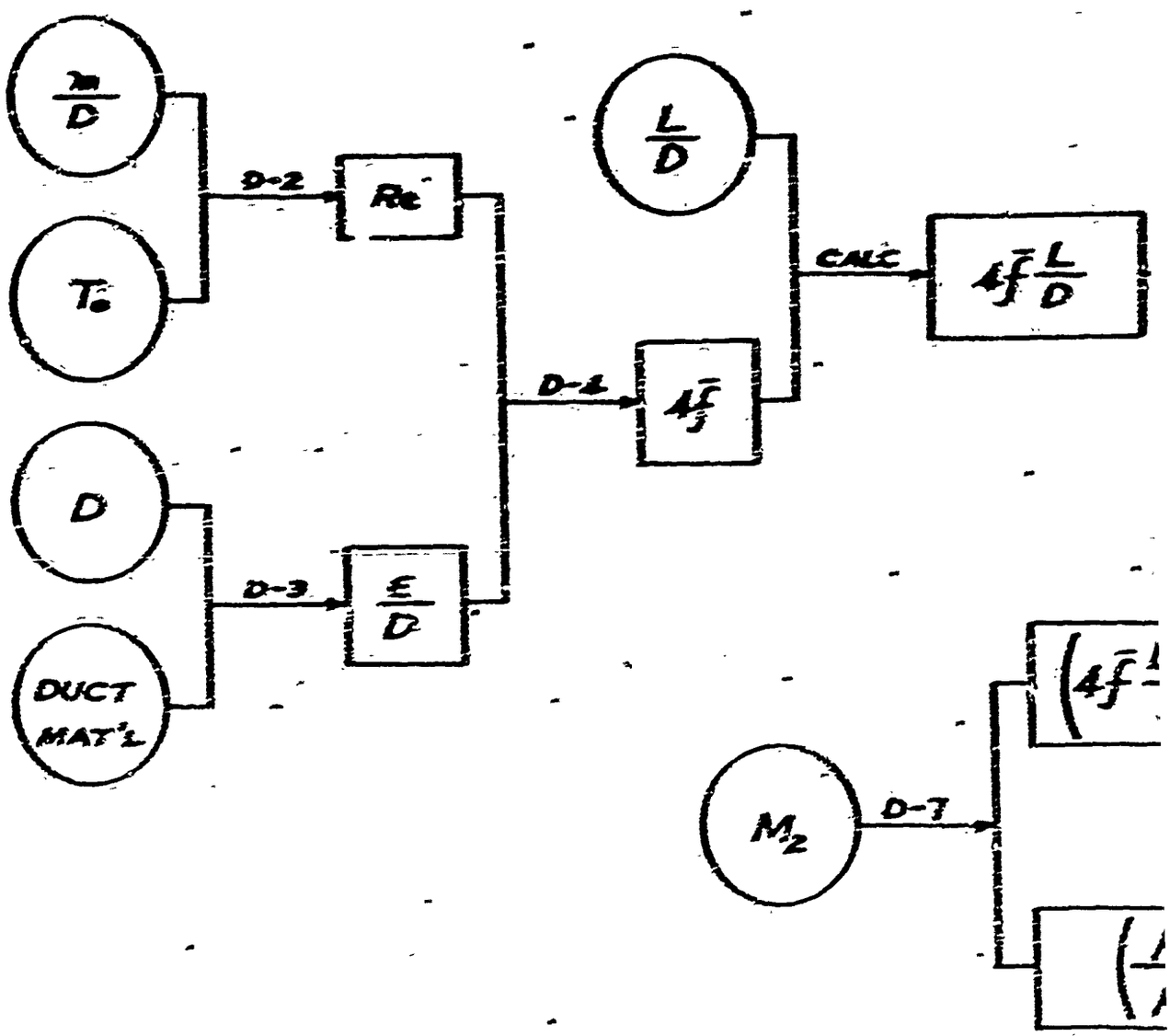

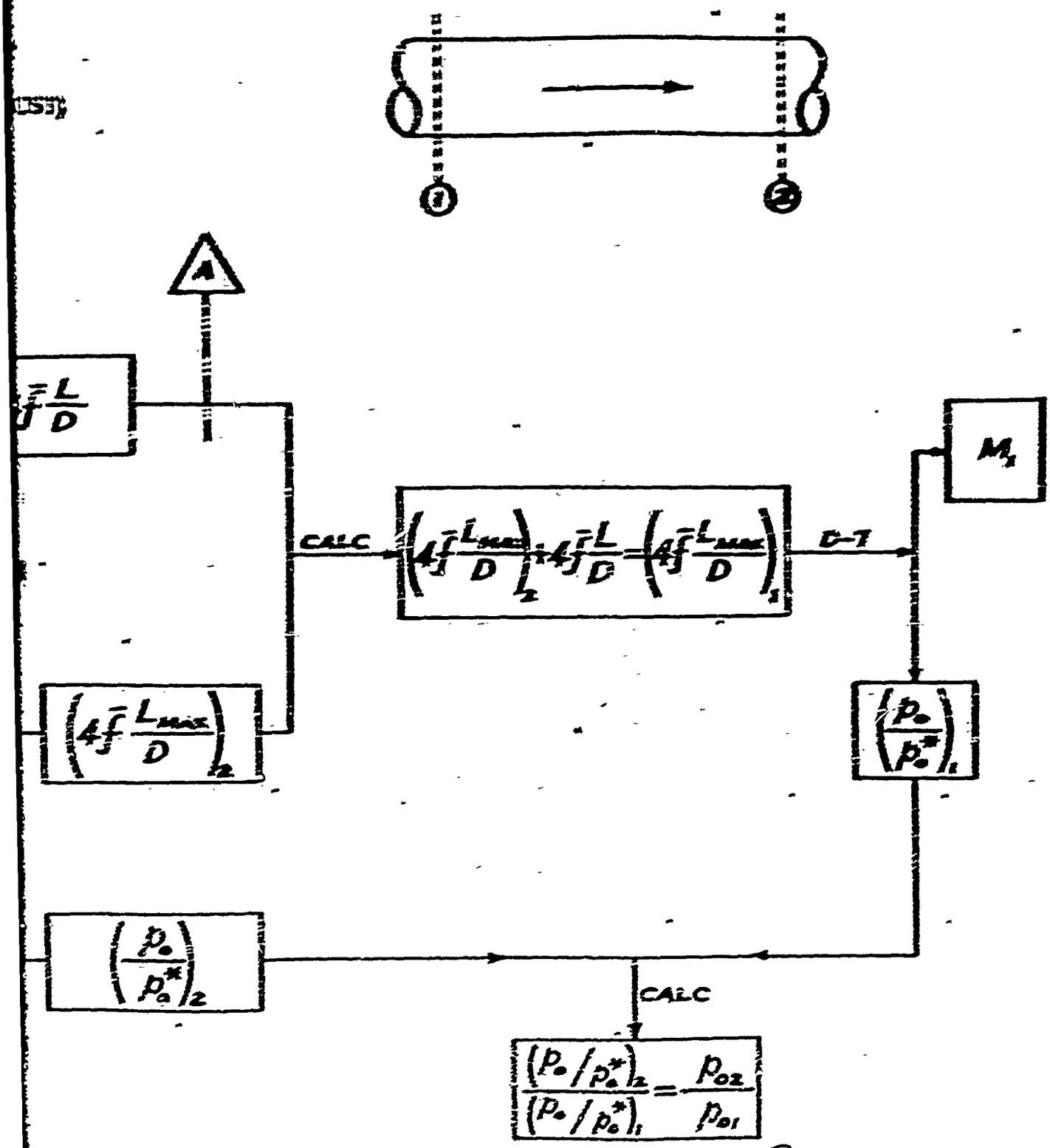
1
2
A
$\bar{f}\frac{L}{D}$
$\left(4\bar{f}\frac{L_{max}}{D}\right)_2$
CALC
$\left(4\bar{f}\frac{L_{max}}{D}\right)_2 - 4\bar{f}\frac{L}{D} = \left(4\bar{f}\frac{L_{max}}{D}\right)_1$
D-T
M_1
$\left(\frac{p_o}{p_o^*}\right)_1$
$\left(\frac{p_o}{p_o^*}\right)_2$
CALC
$\frac{(p_o/p_o^*)_2}{(p_o/p_o^*)_1} = \frac{p_{o2}}{p_{o1}}$

B

PROCEDURE P-2.2

STRAIGHT DUCT (EXHAUST)

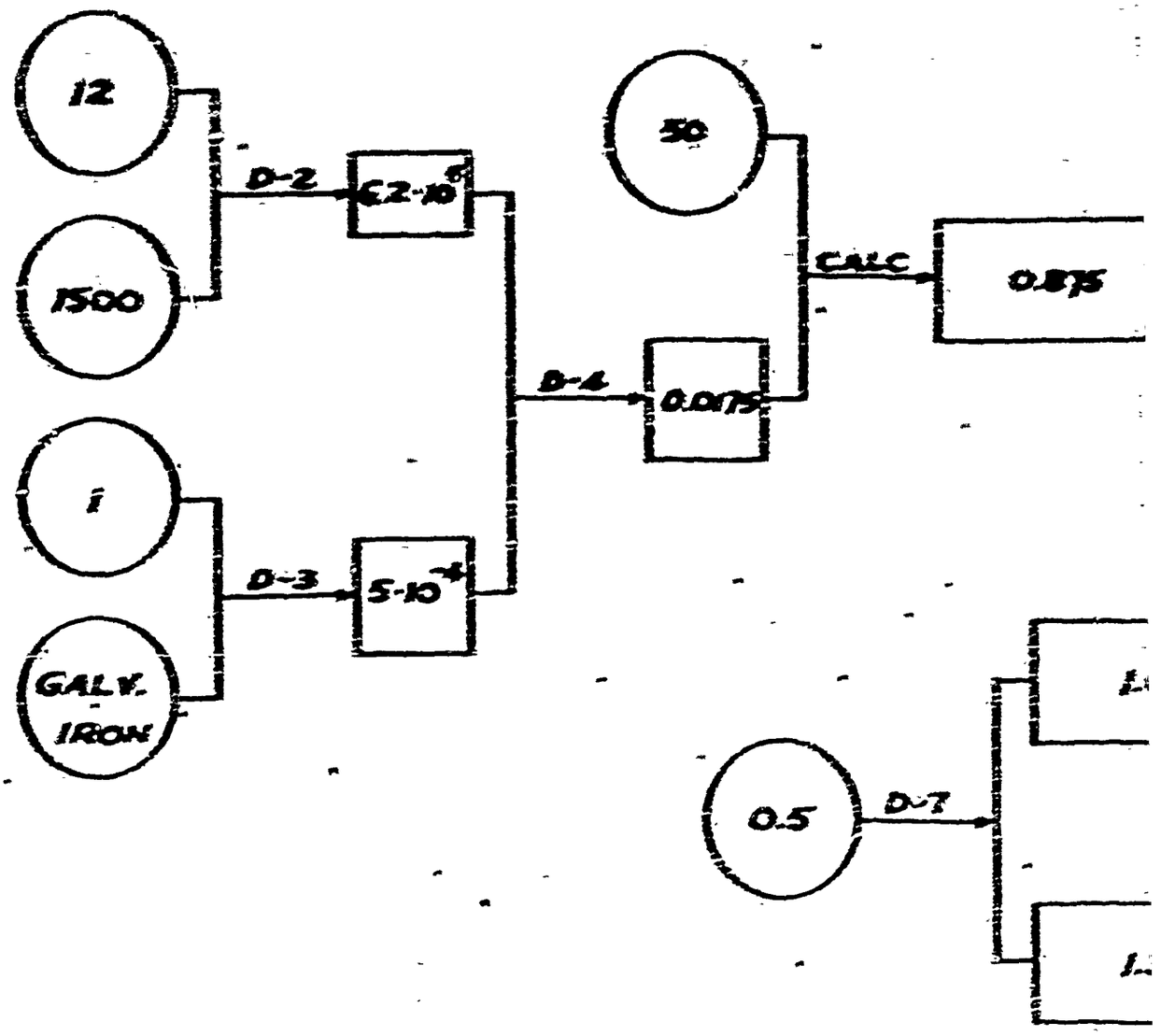

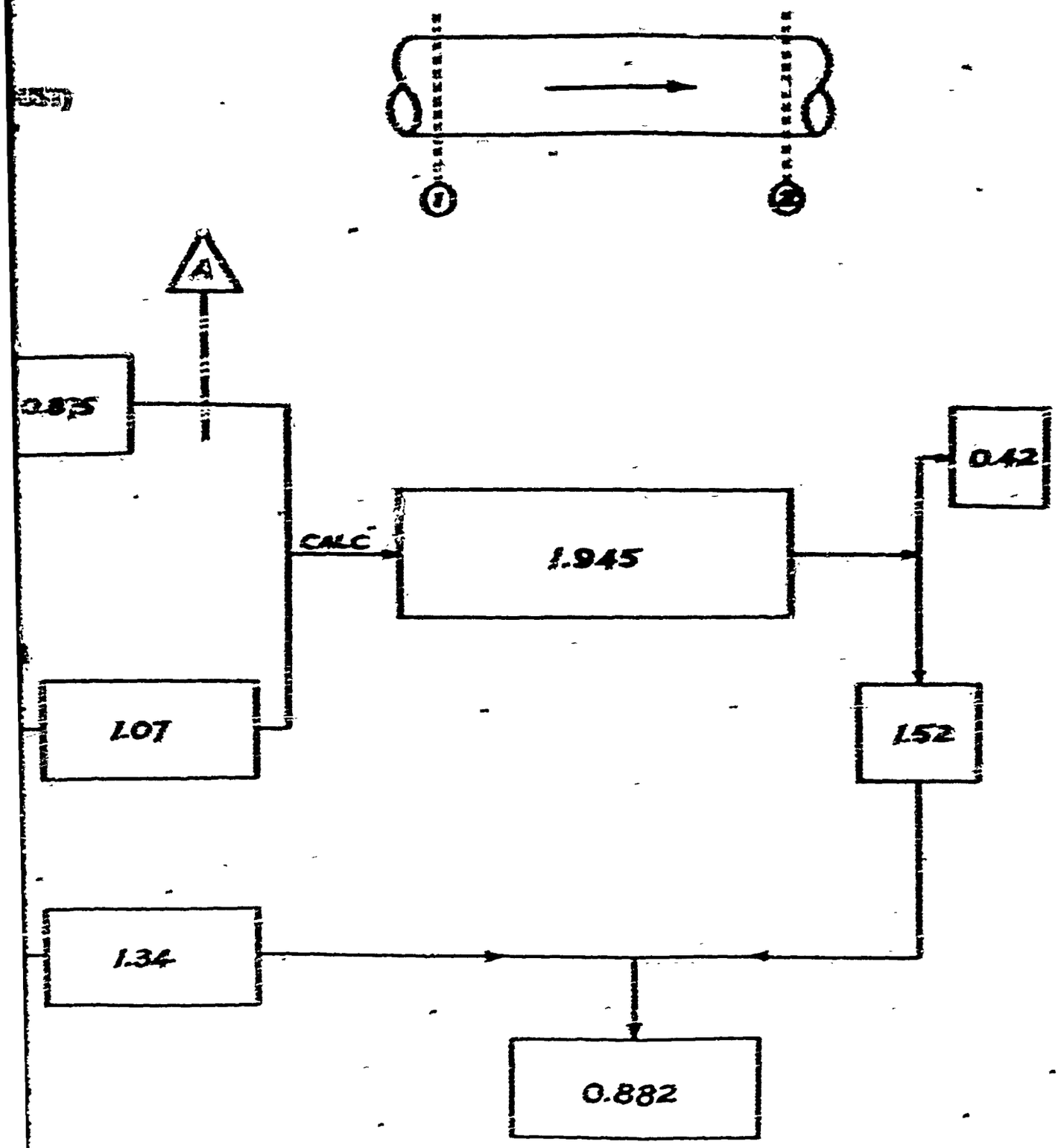

B

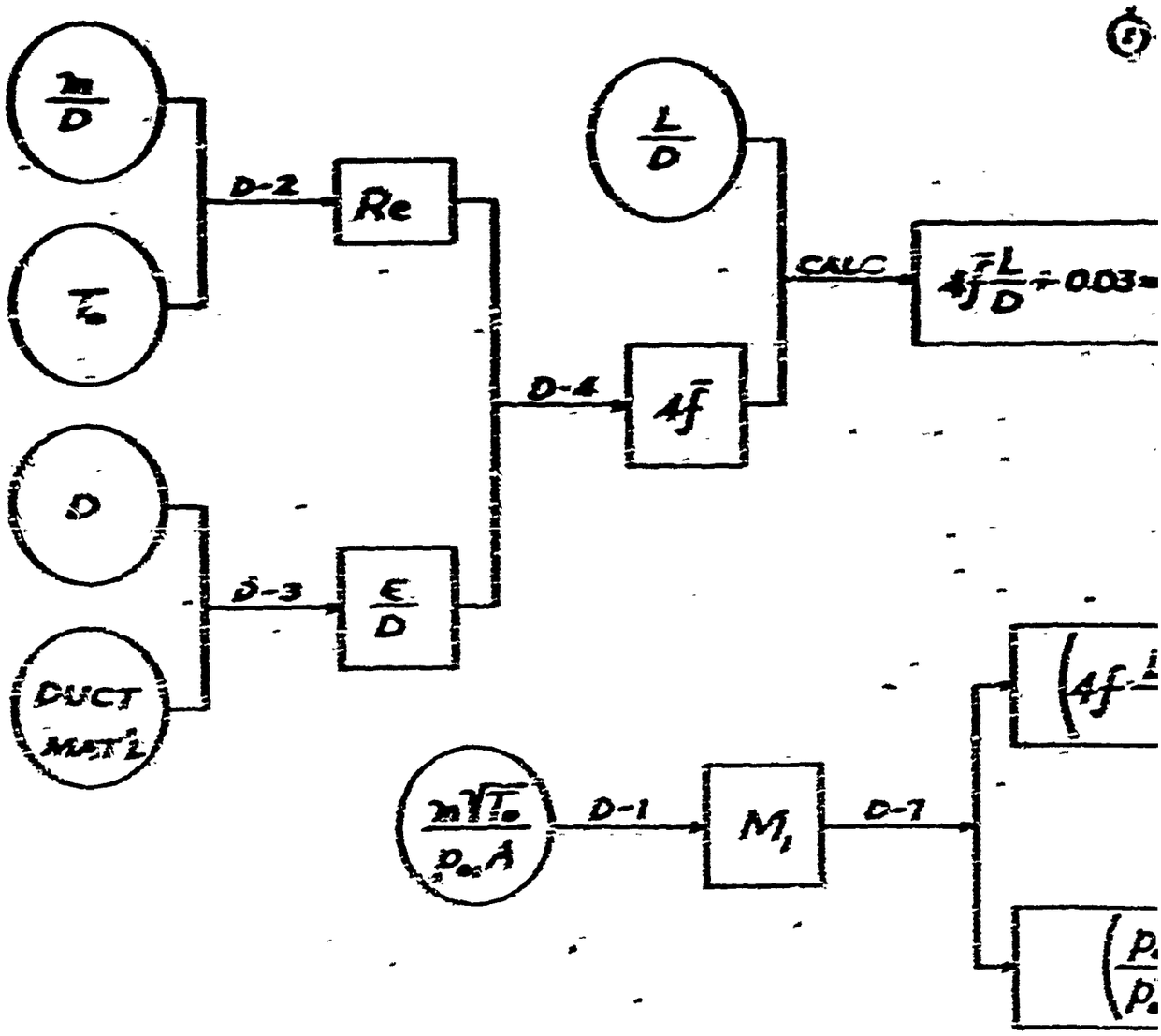
m/D
T₀
D
DUCT MAT'L
D-2
D-3
Re
ε/D
D-4
4f̄
L/D
CALC
4f̄L/D + 0.03
m√T₀ / p₀A
D-1
M₁
D-7

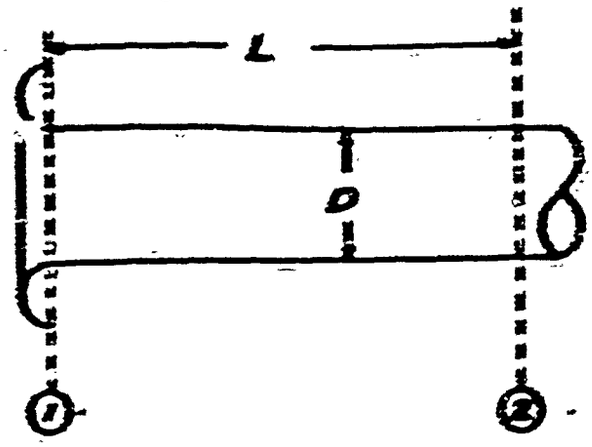

PROCEDURE P-3.1

DUCT INLET LENGTH WITH BELLMOUTH ENTRANCE

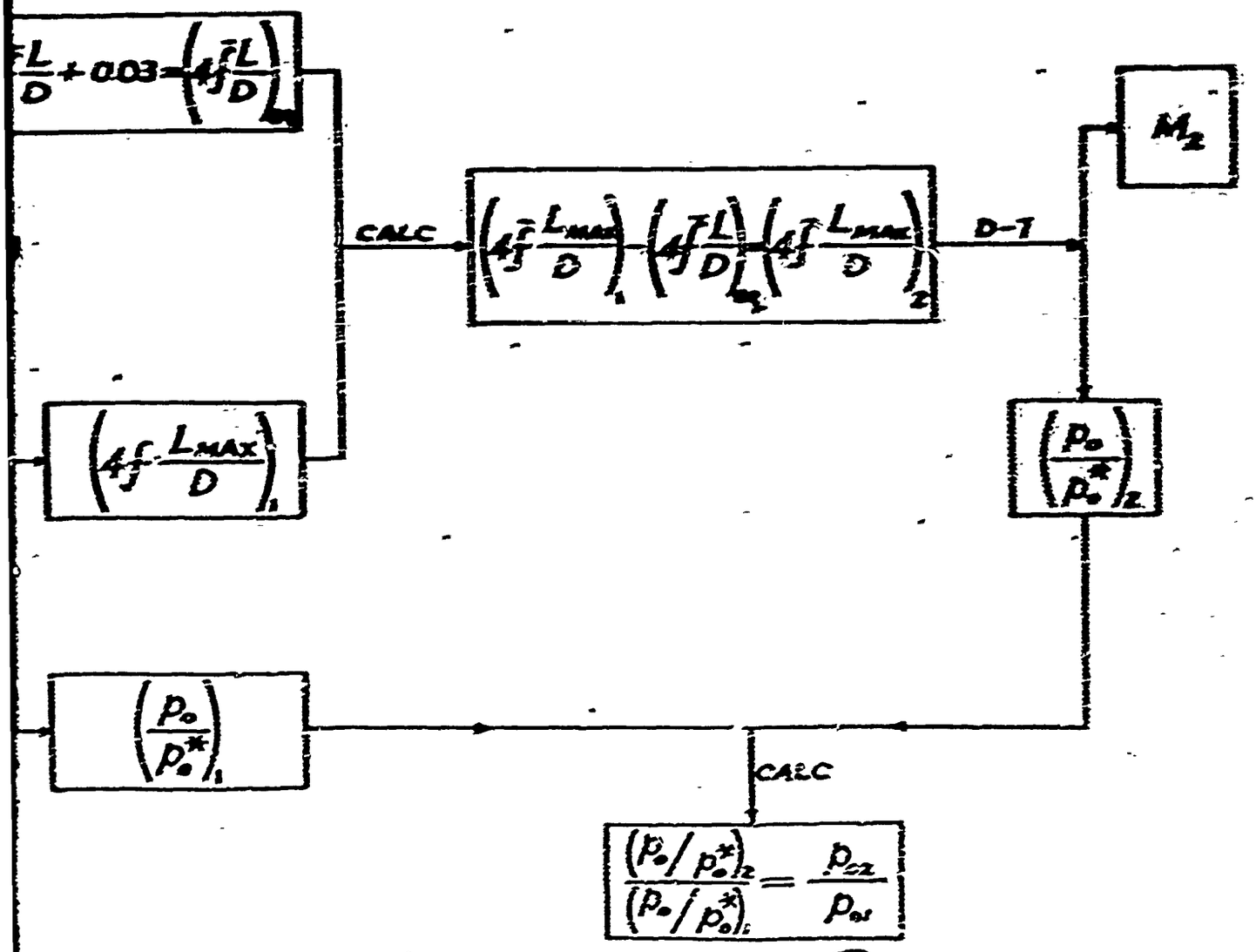

B

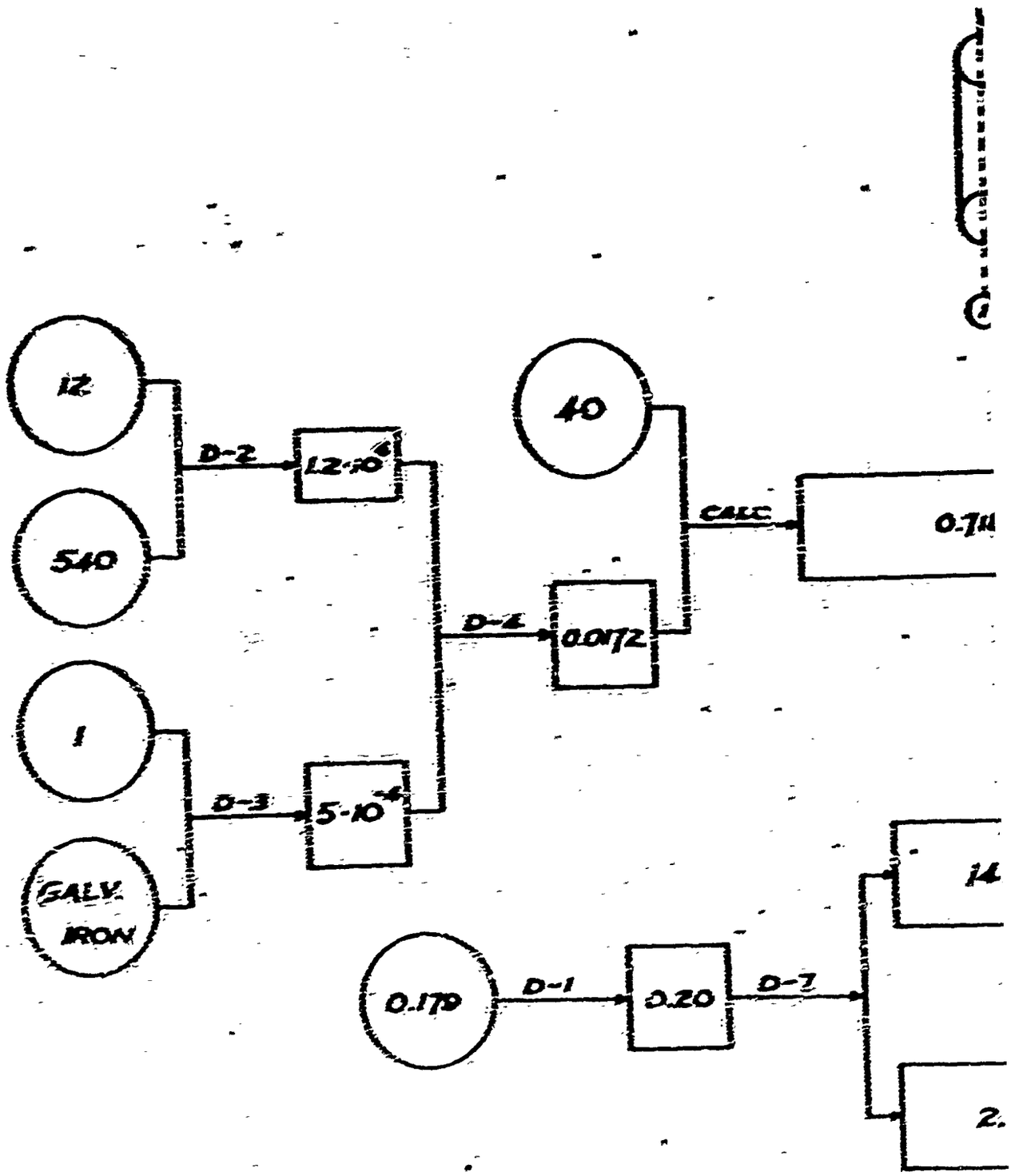
12
540
D-2
$12 \cdot 10^{-4}$
1
GALV. IRON
D-3
$5 \cdot 10^{-4}$
40
CALC
0.714
D-4
0.0172
0.179
D-1
0.20
D-7
14
2.

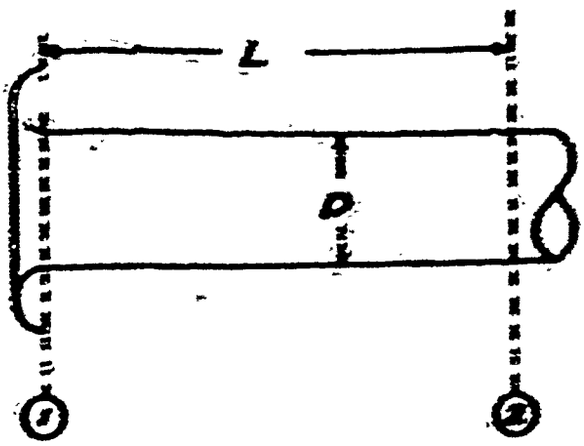

PROCEDURE P-3.1

DUCT INLET LENGTH WITH BELLMOUTH ENTRANCE

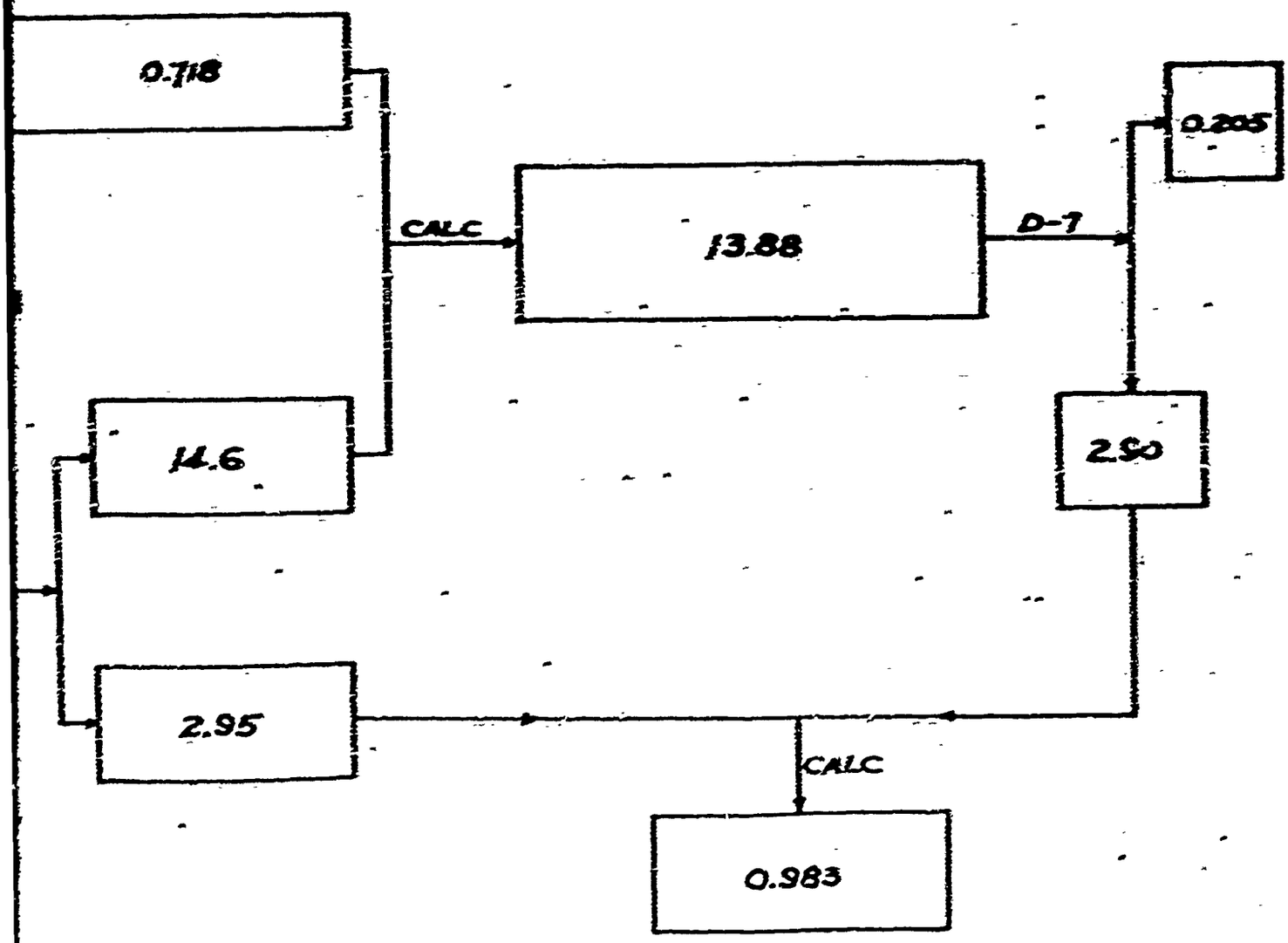

B

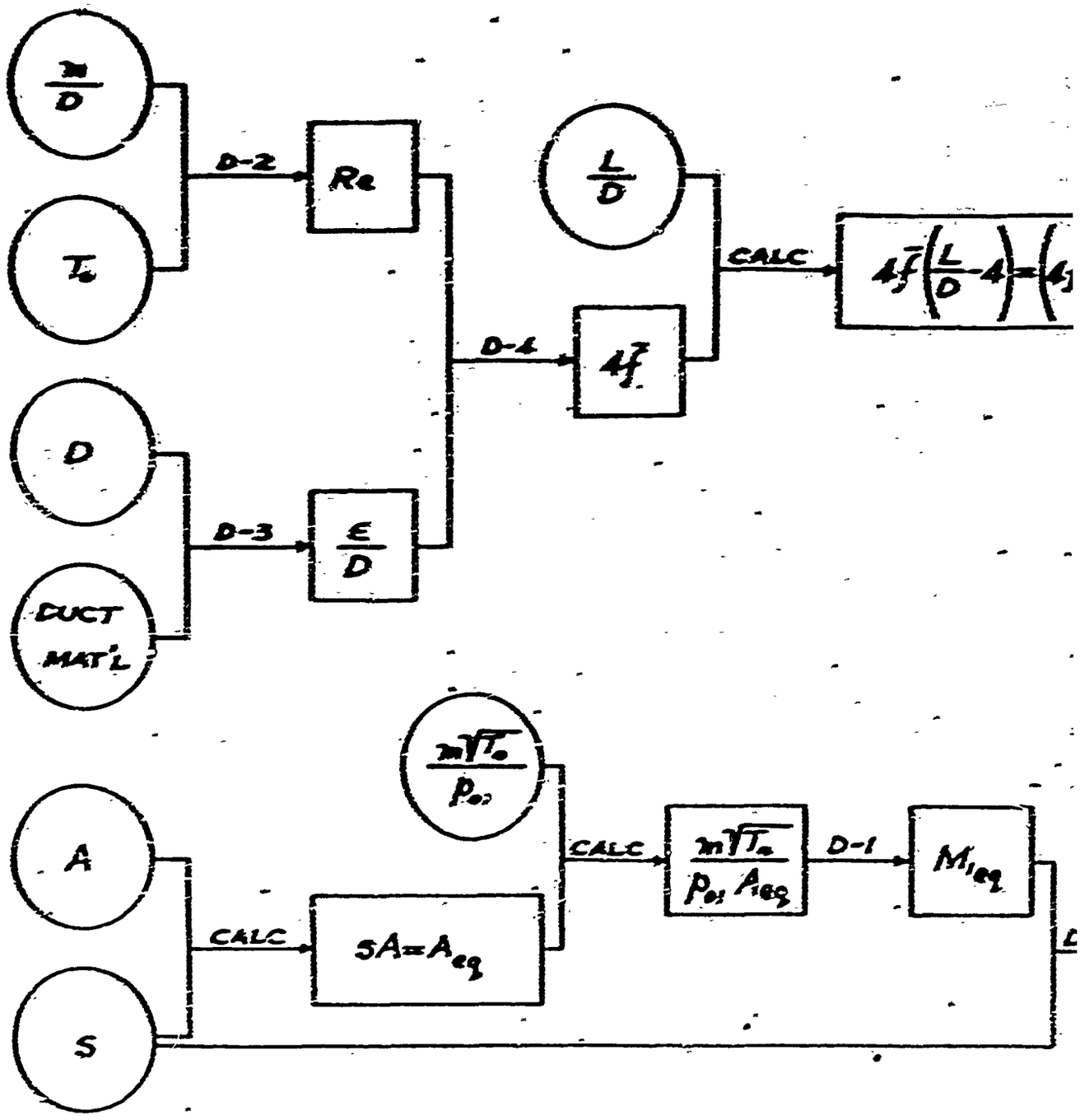

m/D
T₀
D-2
Re
L/D
CALC
D-4
4f̄
D
D-3
ε/D
DUCT MAT'L
m√T₀/p₀₁
A
CALC
sA=A_eq
CALC
m√T₀/(p₀₁ A_eq)
D-1
M_1eq
S

PROCEDURE P 1.2

DUCT INLET LENGTH WITH SHARP EDGED ENTRANCE, WITH OR WITHOUT SCREEN AT ENTRANCE

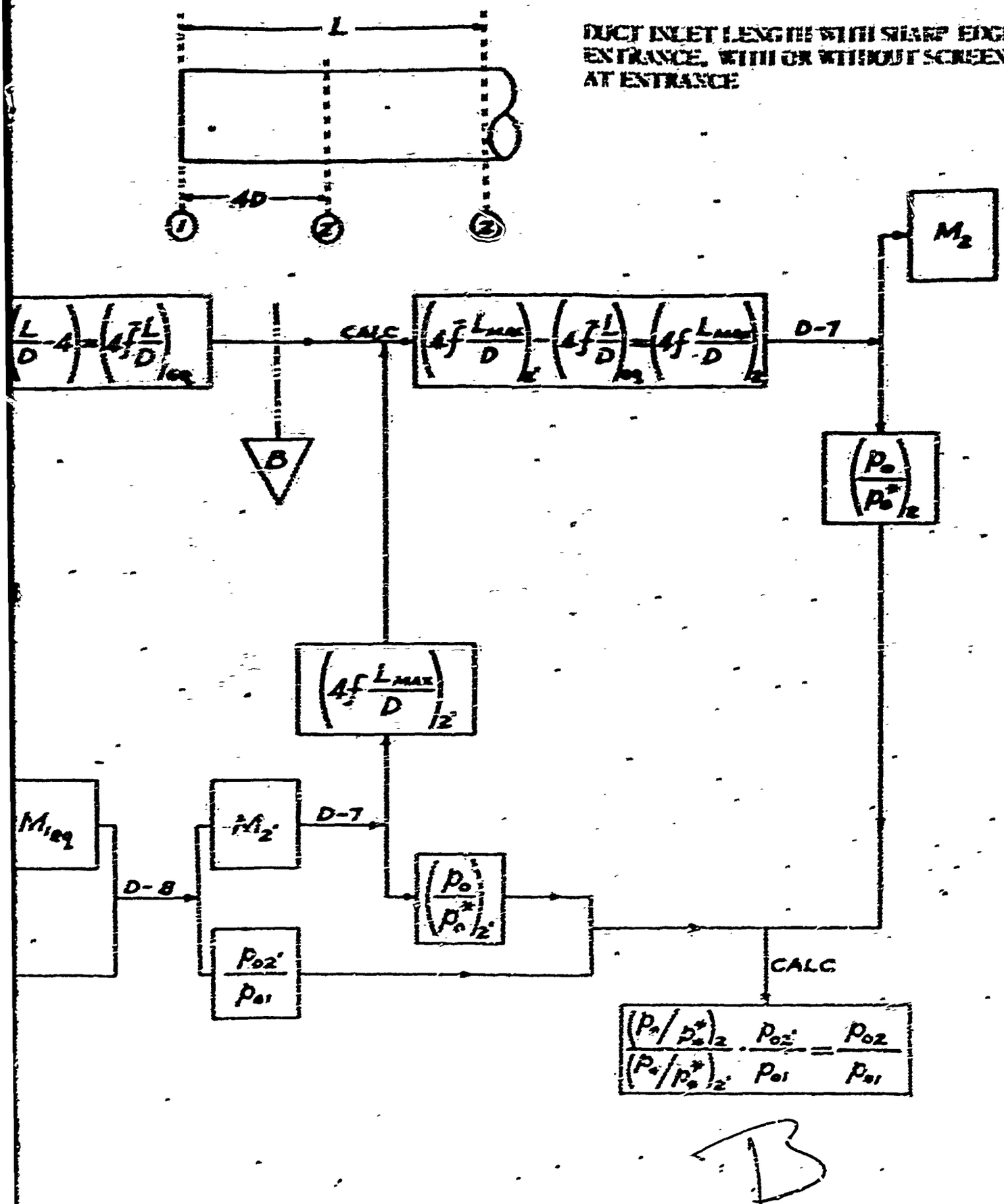

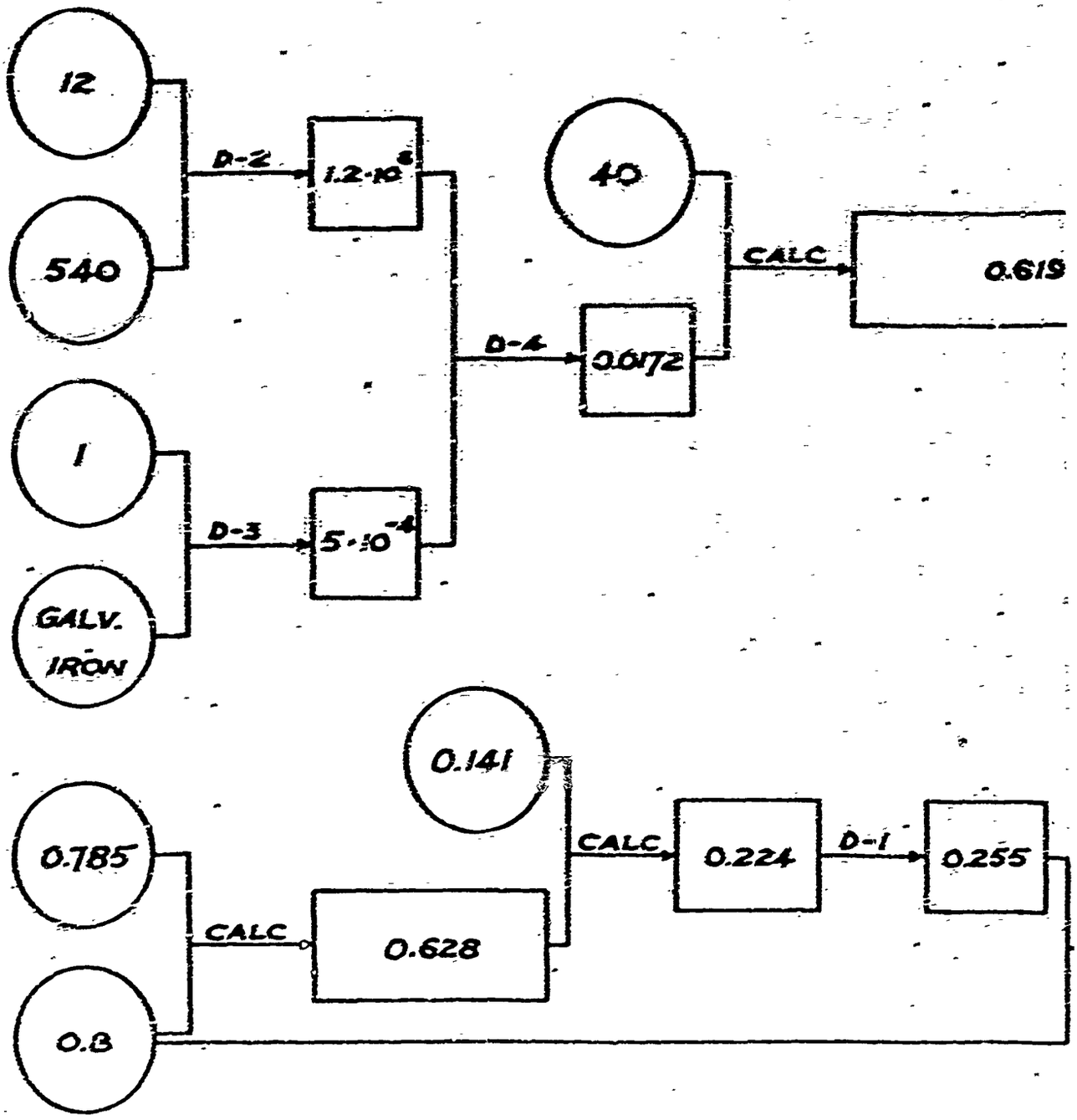
12
540
D-2
1.2·10^6
40
CALC
0.619
D-4
0.0172
1
D-3
5·10^-4
GALV. IRON
0.141
0.785
CALC
0.224
D-1
0.255
CALC
0.628
0.8

PROCEDURE P-3.2

DUCT INLET LENGTH WITH SHARP EDGED ENTRANCE, WITH OR WITHOUT SCREEN AT ENTRANCE.

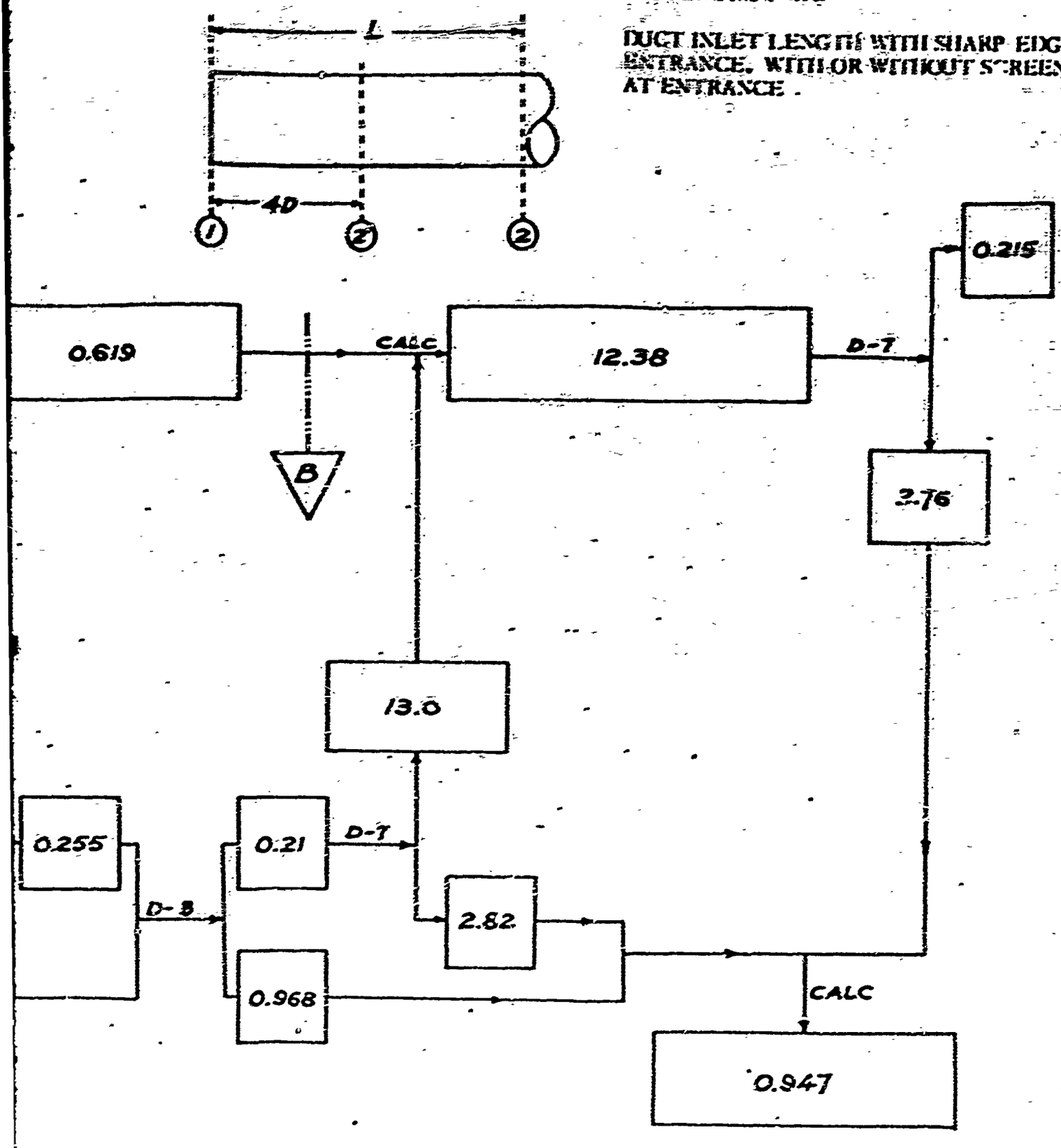

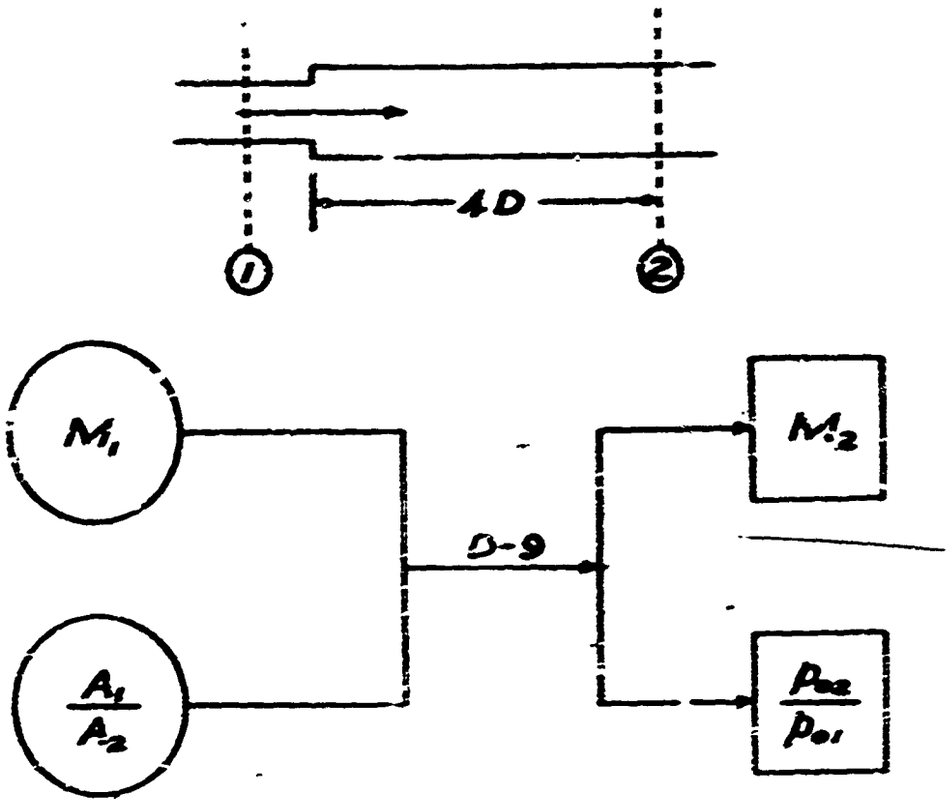

PROCEDURE P-4.1

ABRUPT AREA INCREASE (INTAKE)

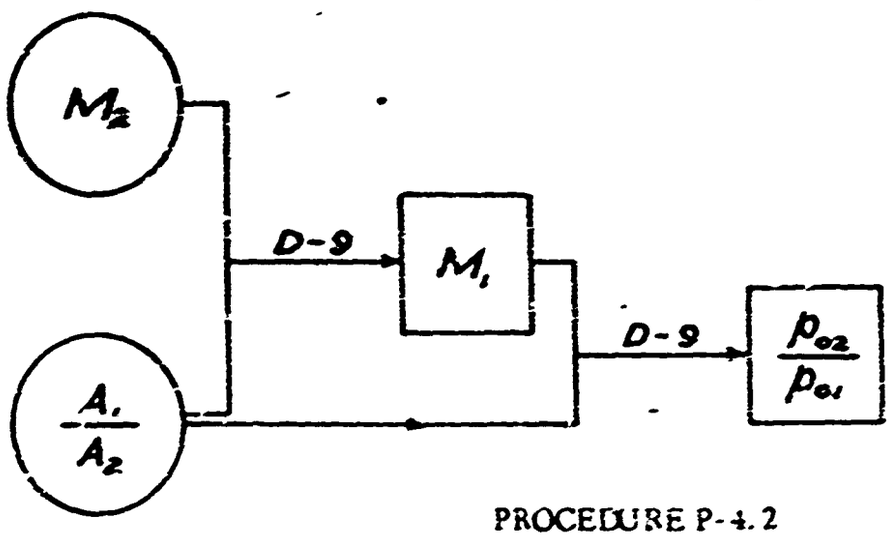

PROCEDURE P-4.2

ABRUPT AREA INCREASE (EXHAUST)

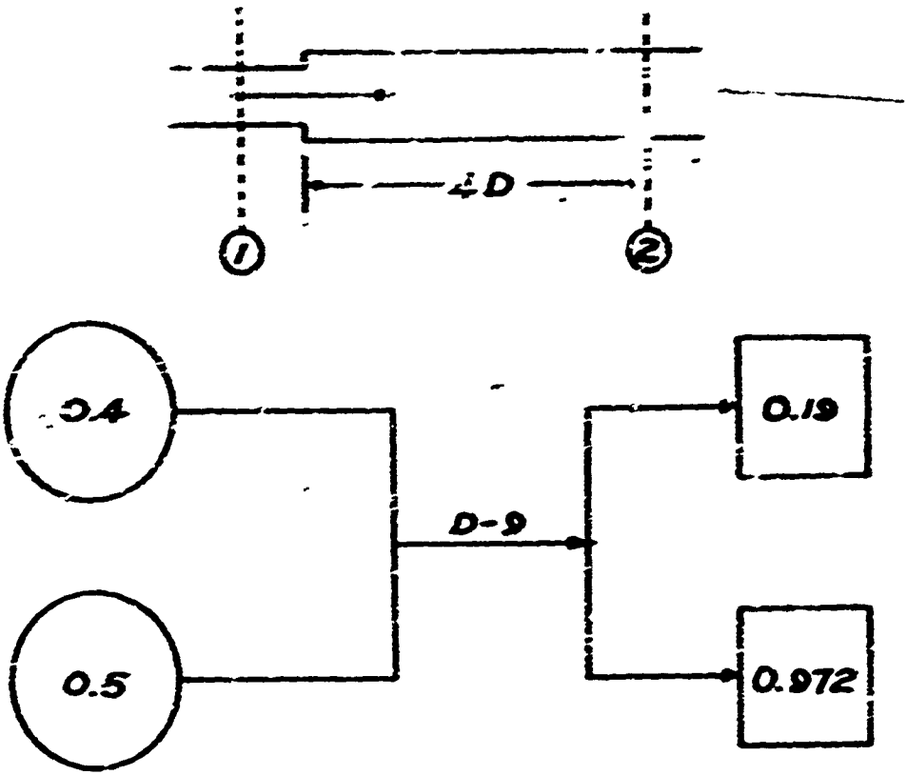

PROCEDURE P-4.1

ABRUPT AREA INCREASE (INTAKE)

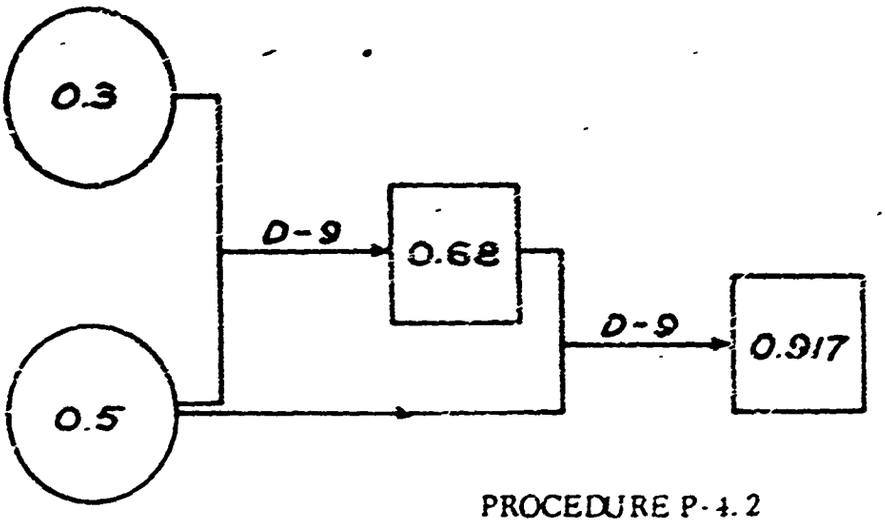

PROCEDURE P-4.2

ABRUPT AREA INCREASE (EXHAUST)

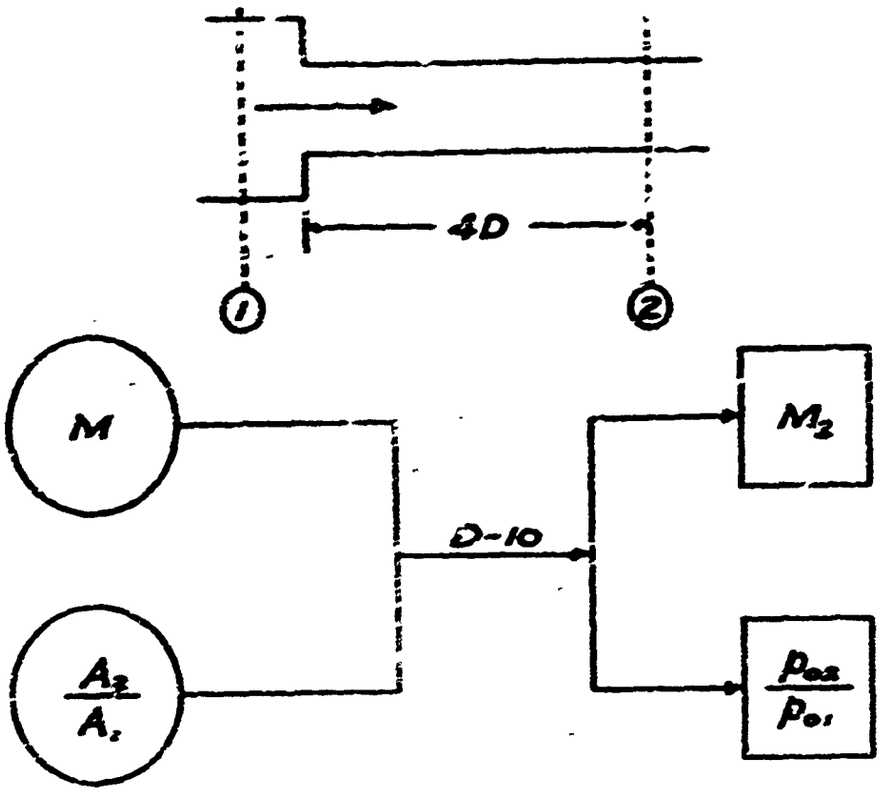

PROCEDURE P-5.1

ABRUPT AREA DECREASE (INTAKE)

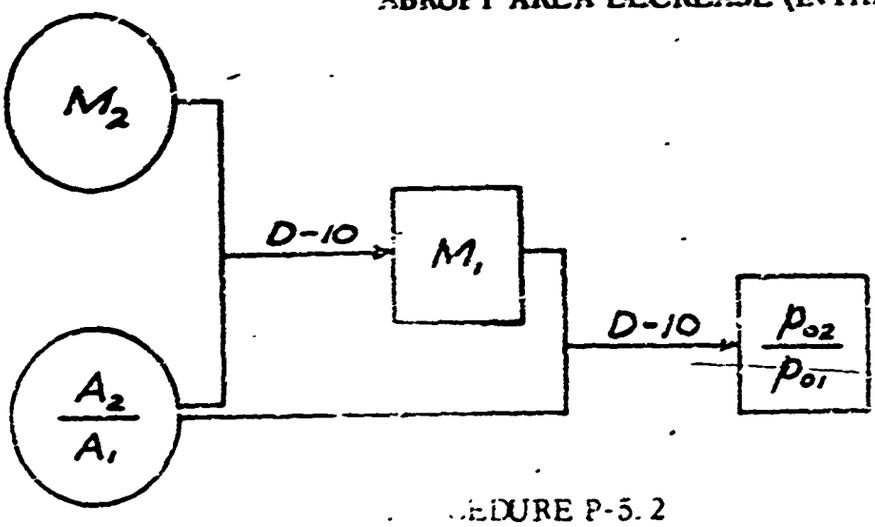

PROCEDURE P-5.2

ABRUPT AREA DECREASE (EXHAUST)

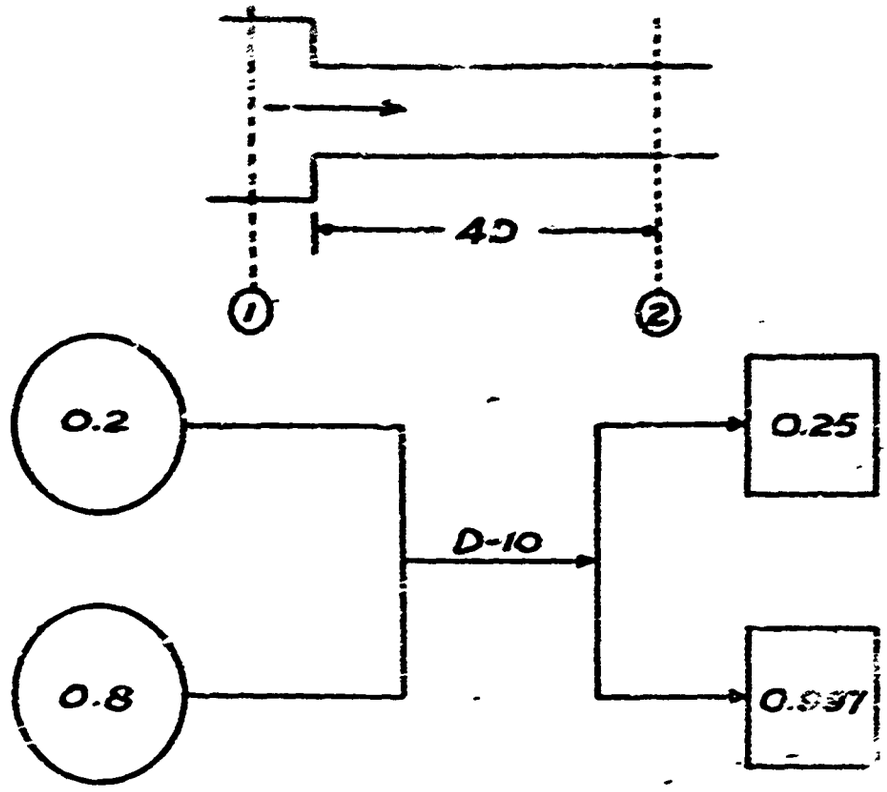

PROCEDURE P-5.1

ABRUPT AREA DECREASE (INTAKE)

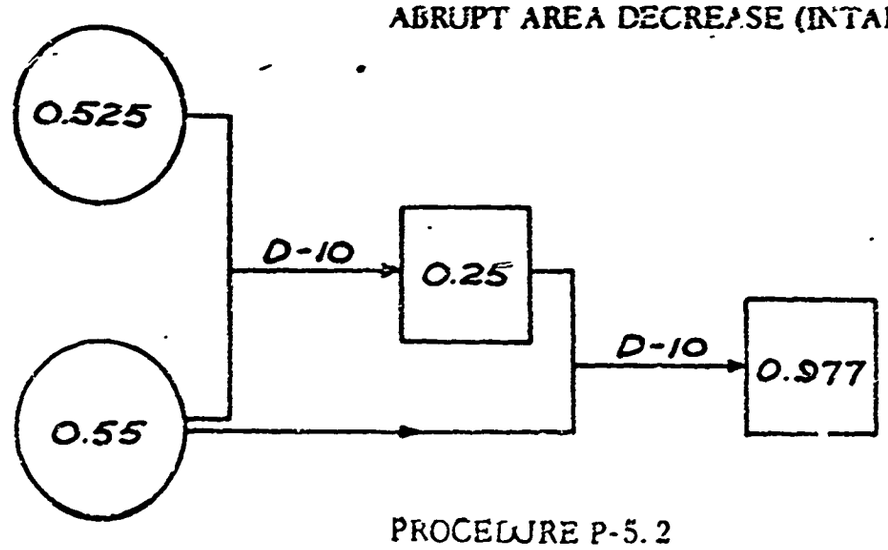

PROCEDURE P-5.2

ABRUPT AREA DECREASE (EXHAUST)

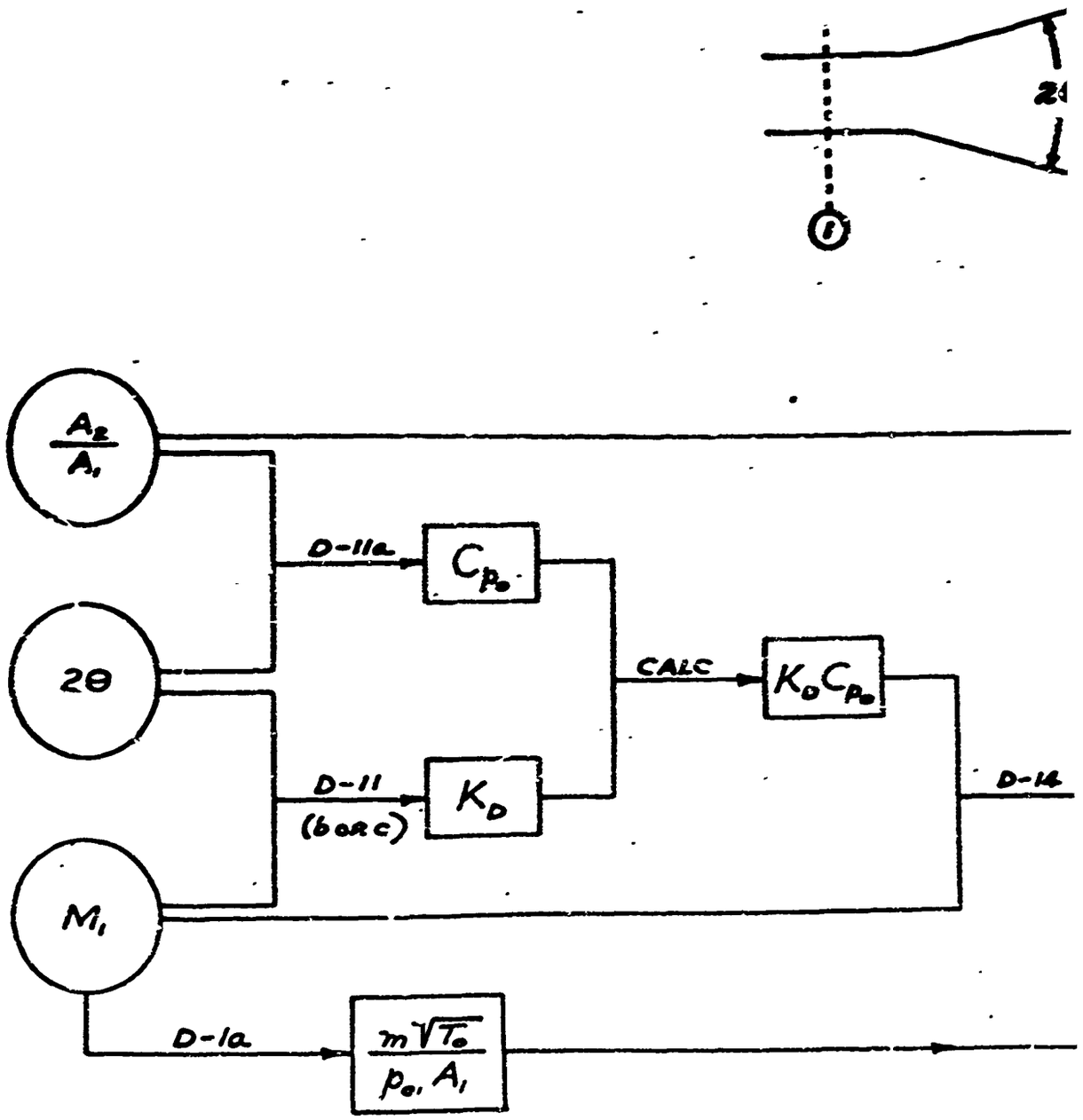
2θ
1
$\frac{A_2}{A_1}$
2θ
M_1
D-11a
C_{p_0}
D-11
(b or c)
K_D
CALC
$K_D C_{p_0}$
D-14
D-1a
$\frac{m\sqrt{T_0}}{p_{01} A_1}$

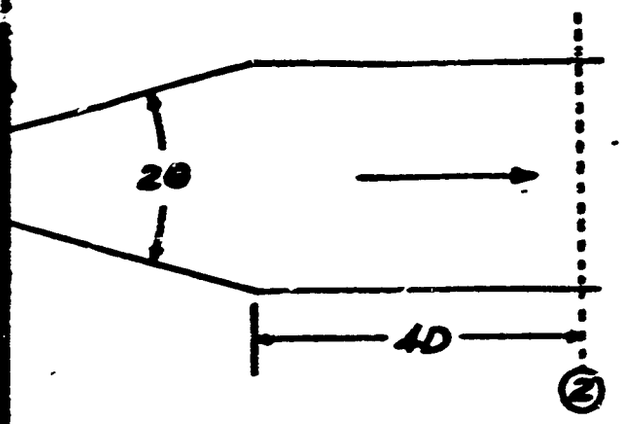

PROCEDURE P-6.1

DIFFUSERS (INTAKE)

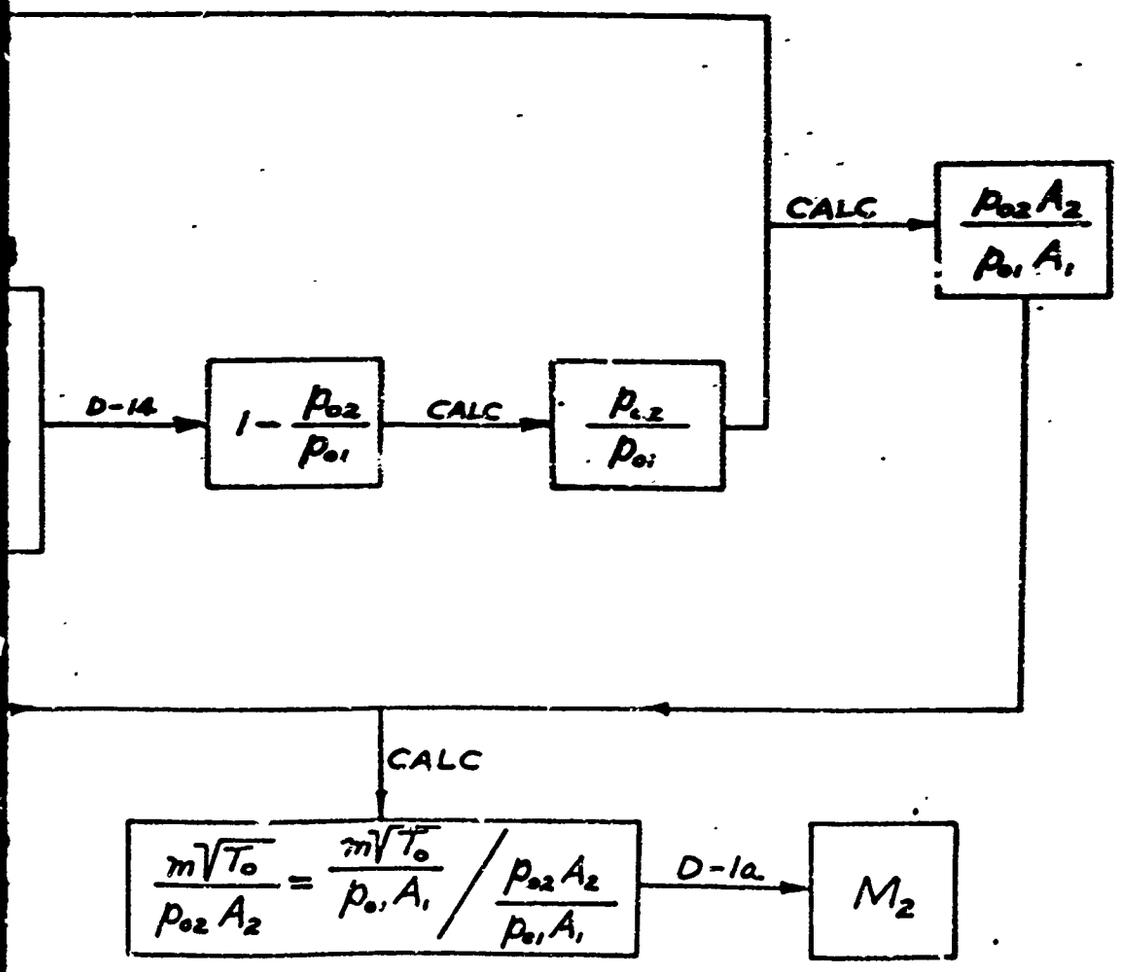

B

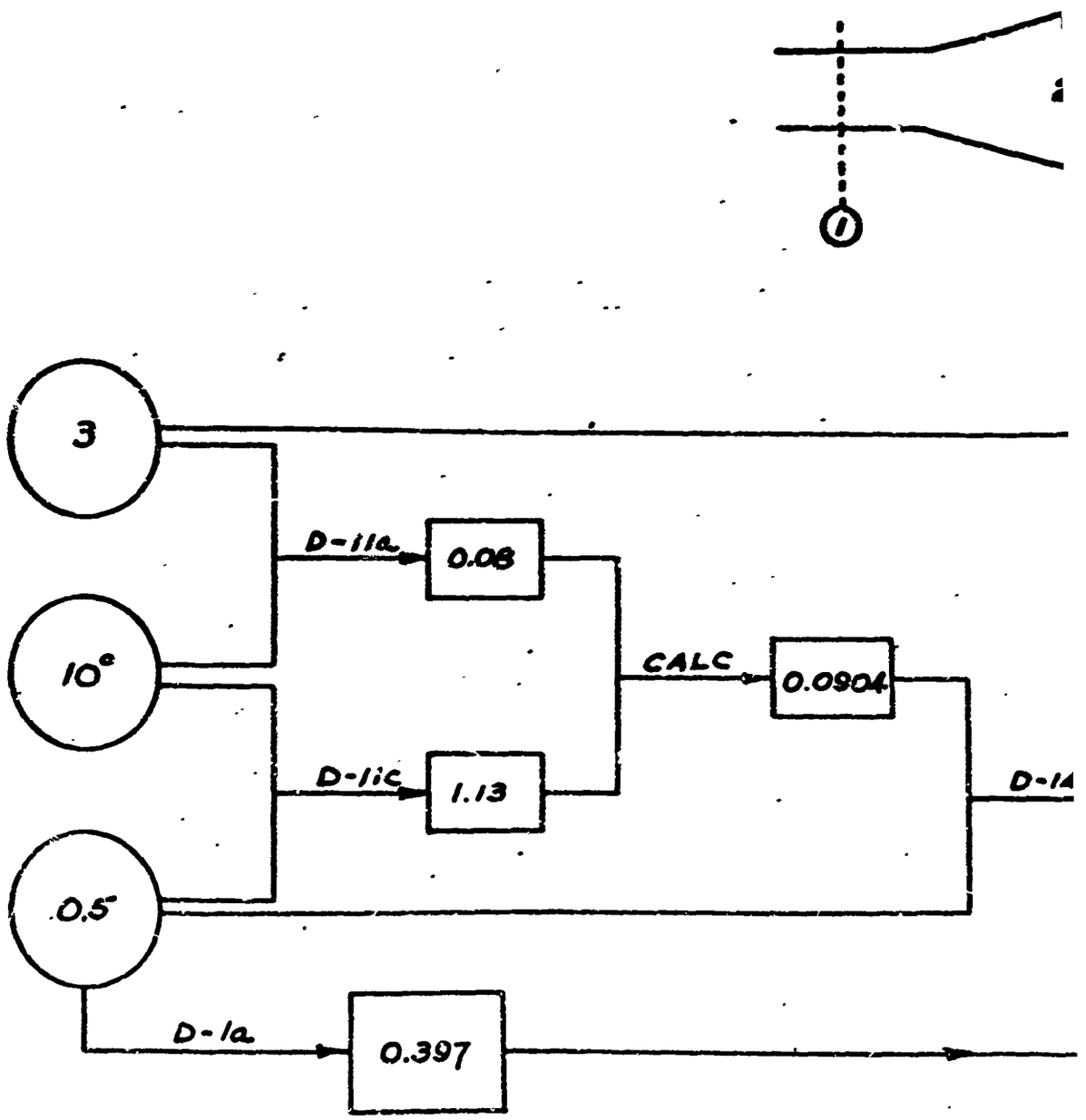
1
3
10°
0.5
D-11a
0.08
D-11c
1.13
CALC
0.0904
D-1a
0.397

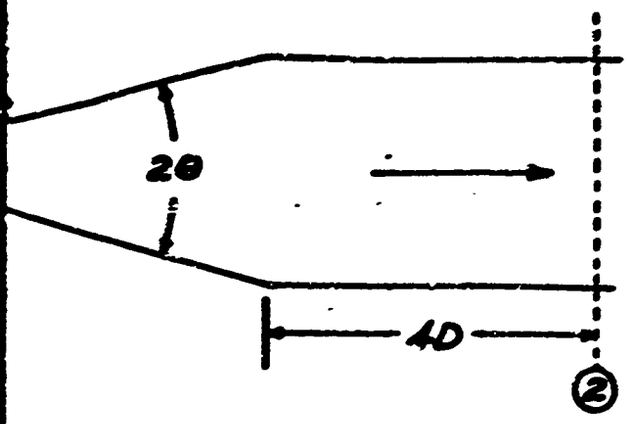

PROCEDURE P-6.1

DIFFUSERS (INTAKE)

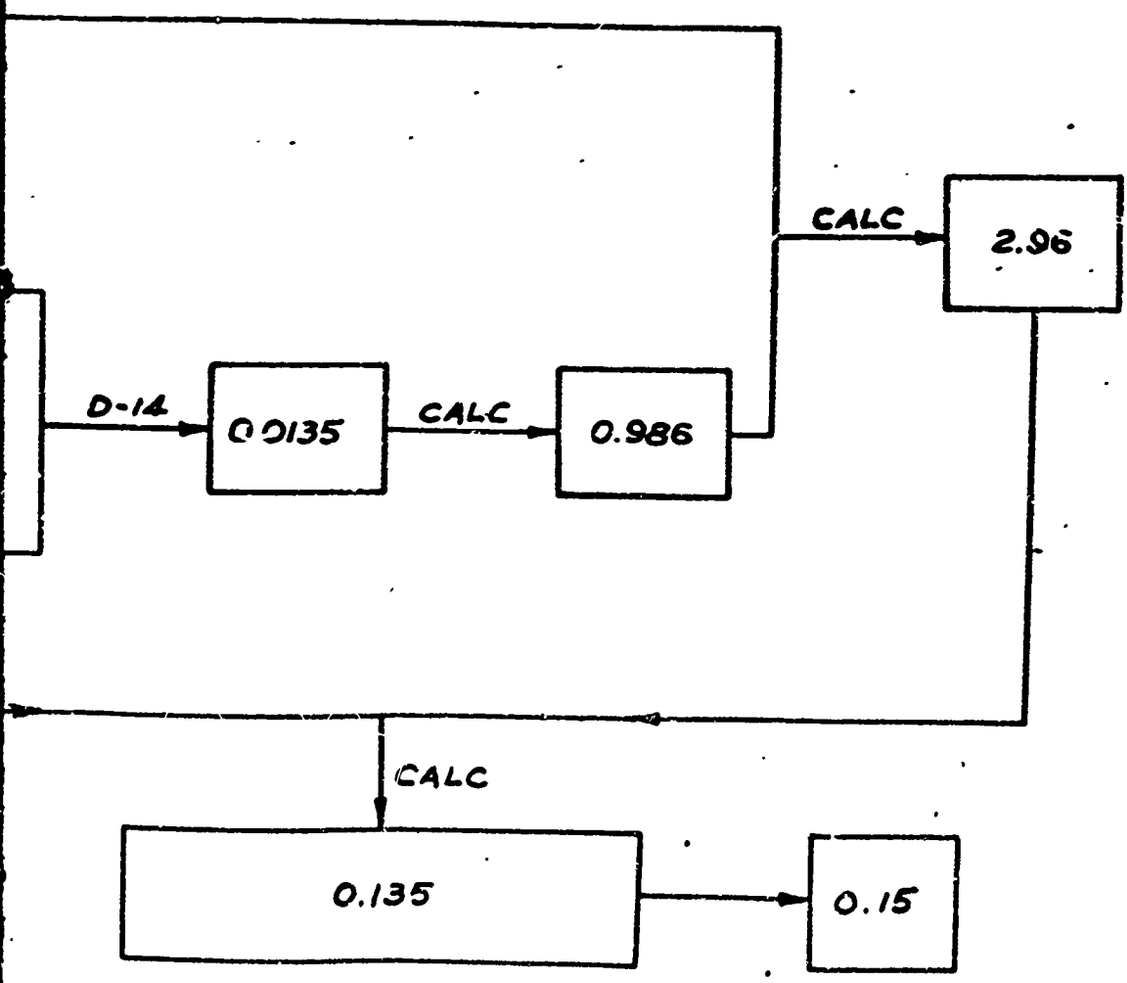

B

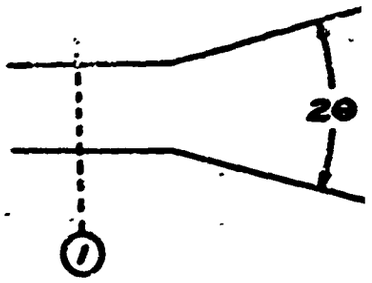
2θ
1

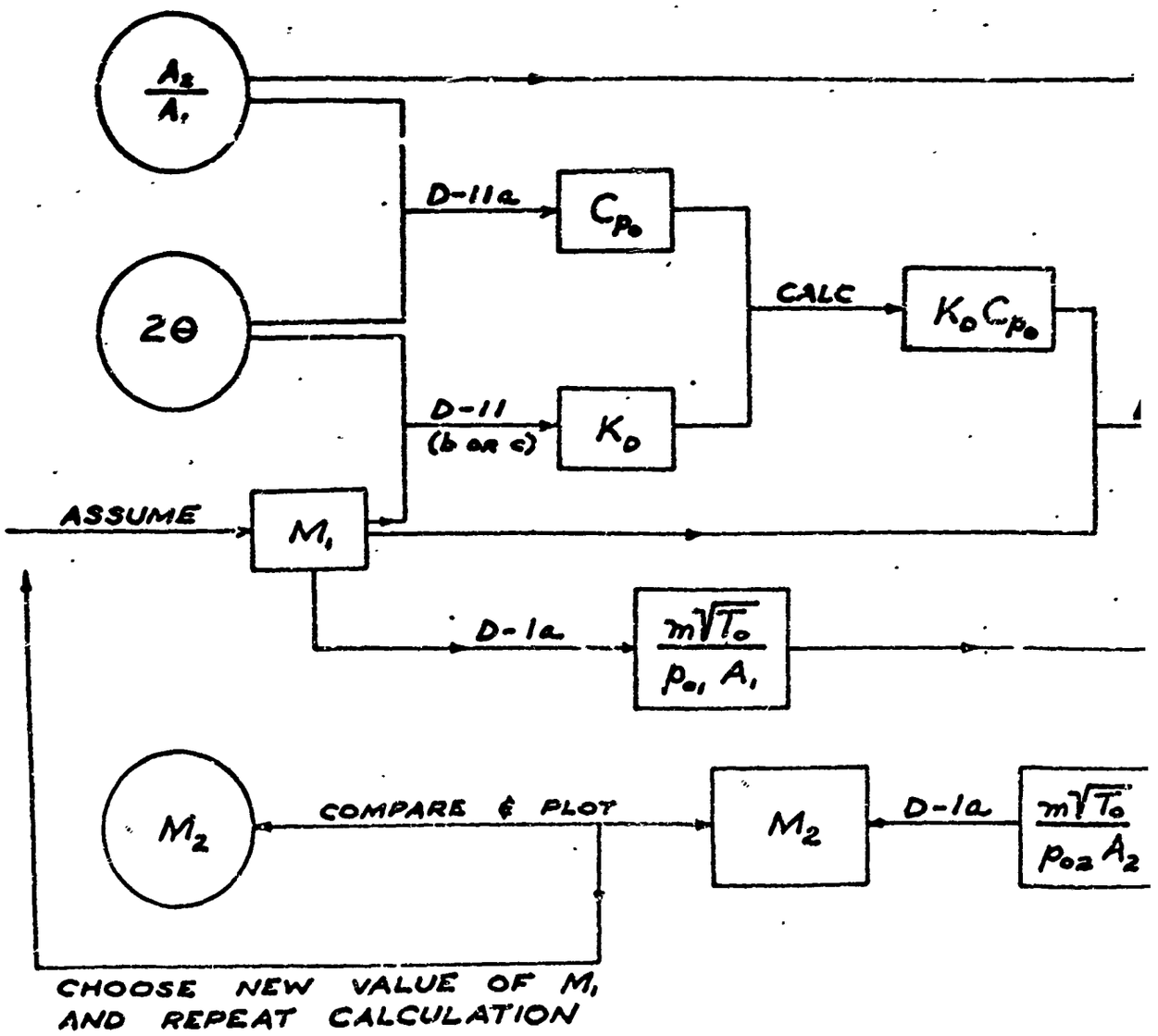
A2/A1
2θ
D-11a
Cp0
D-11
(b or c)
K0
CALC
K0 Cp0
ASSUME
M1
D-1a
m√T0 / p01 A1
M2
COMPARE & PLOT
M2
D-1a
m√T0 / p02 A2
CHOOSE NEW VALUE OF M1
AND REPEAT CALCULATION

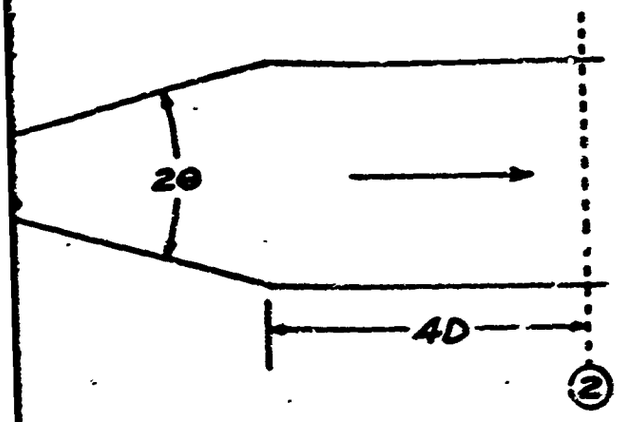

PROCEDURE P-6.2

DIFFUSERS (EXHAUST)

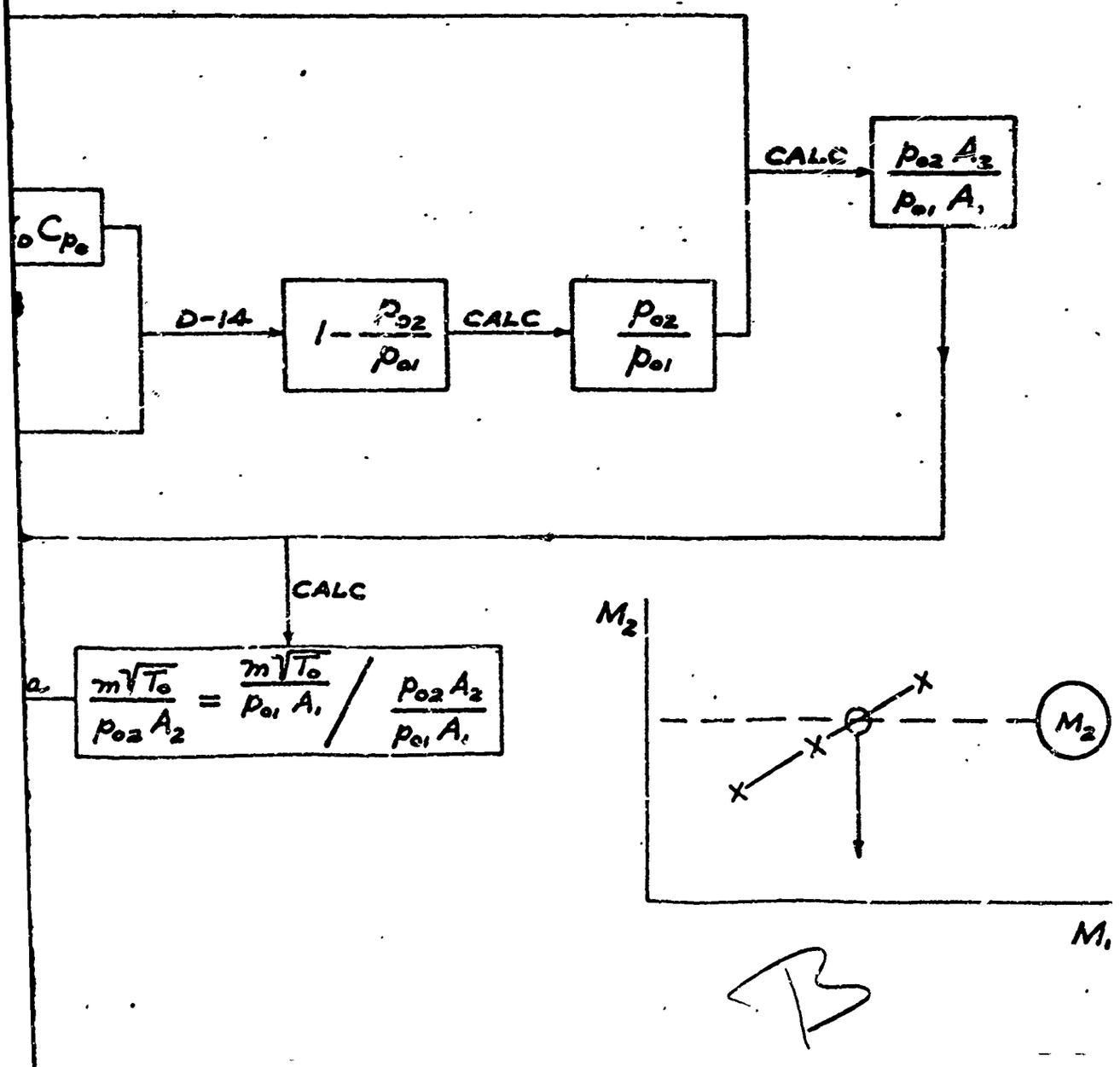

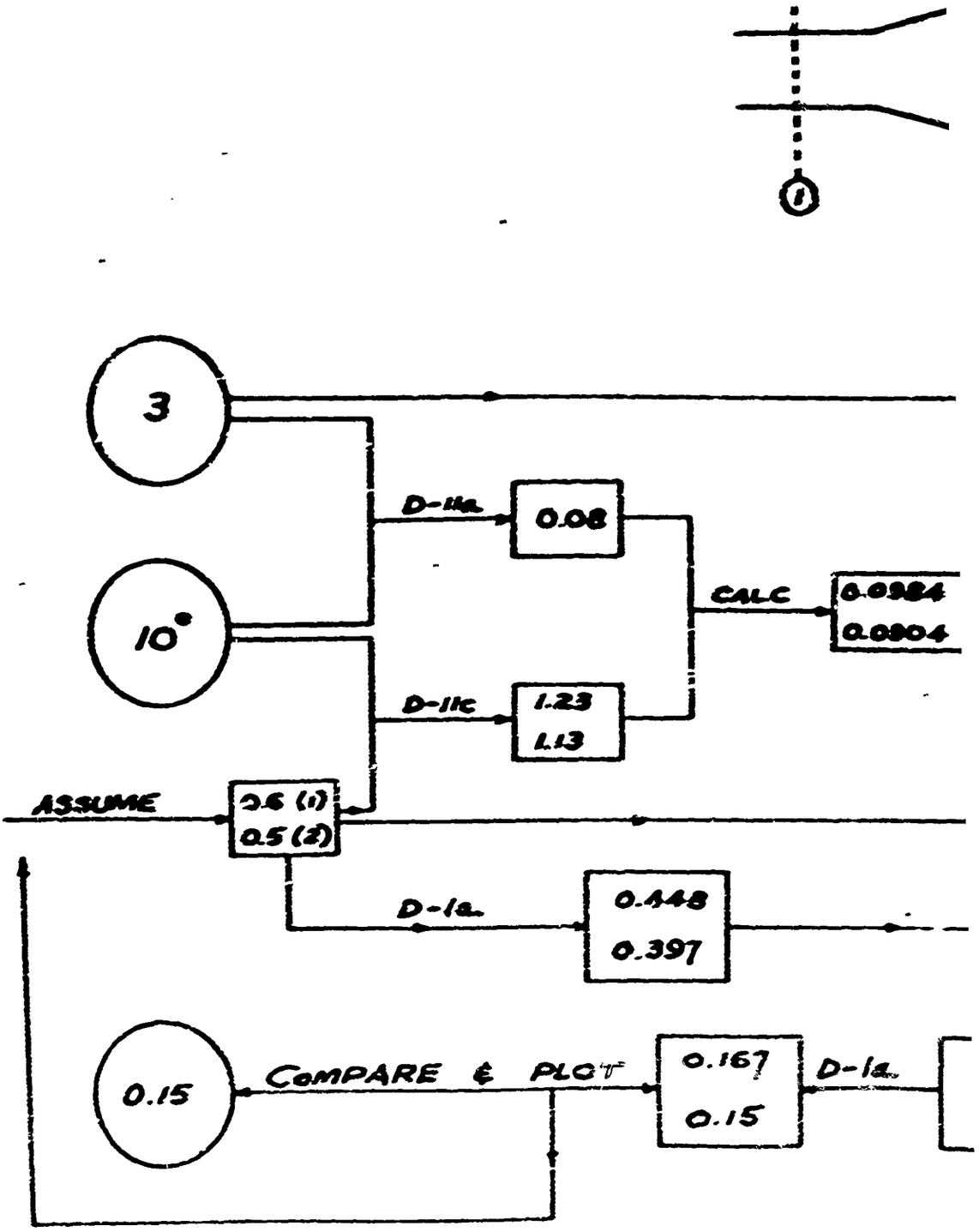
1
3
10°
D-11a
0.08
D-11c
1.23
1.13
CALC
0.0984
0.0904
ASSUME
0.6 (1)
0.5 (2)
D-1a
0.448
0.397
0.15
COMPARE & PLOT
0.167
0.15
D-1a

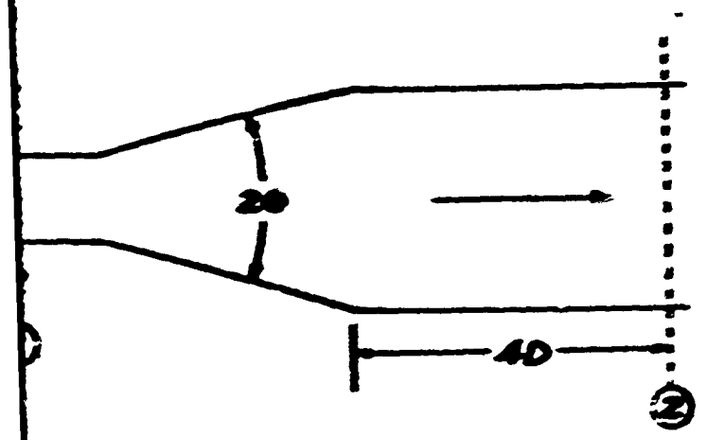

PROCEDURE P-6.2

DIFFUSERS (EXHAUST)

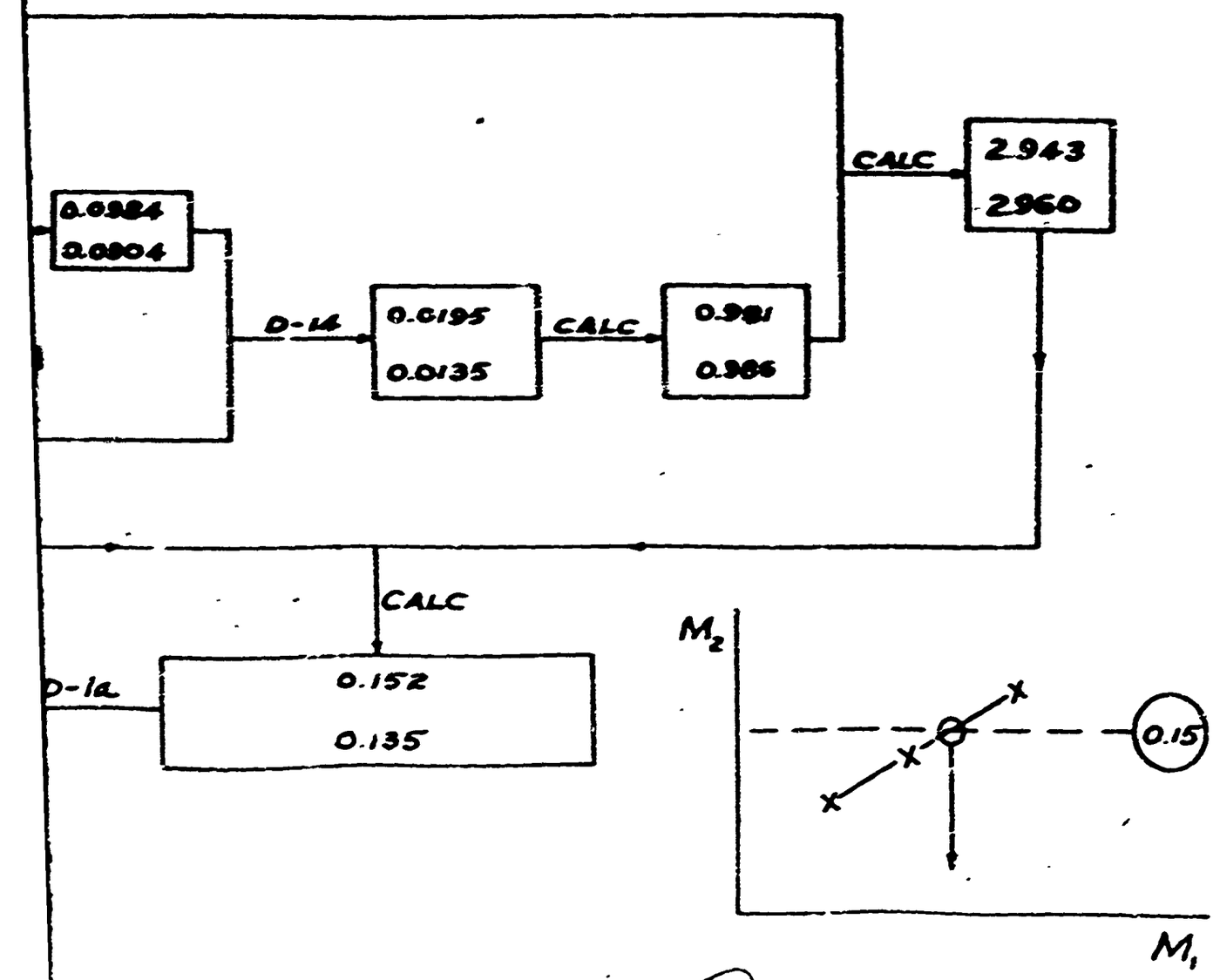

B

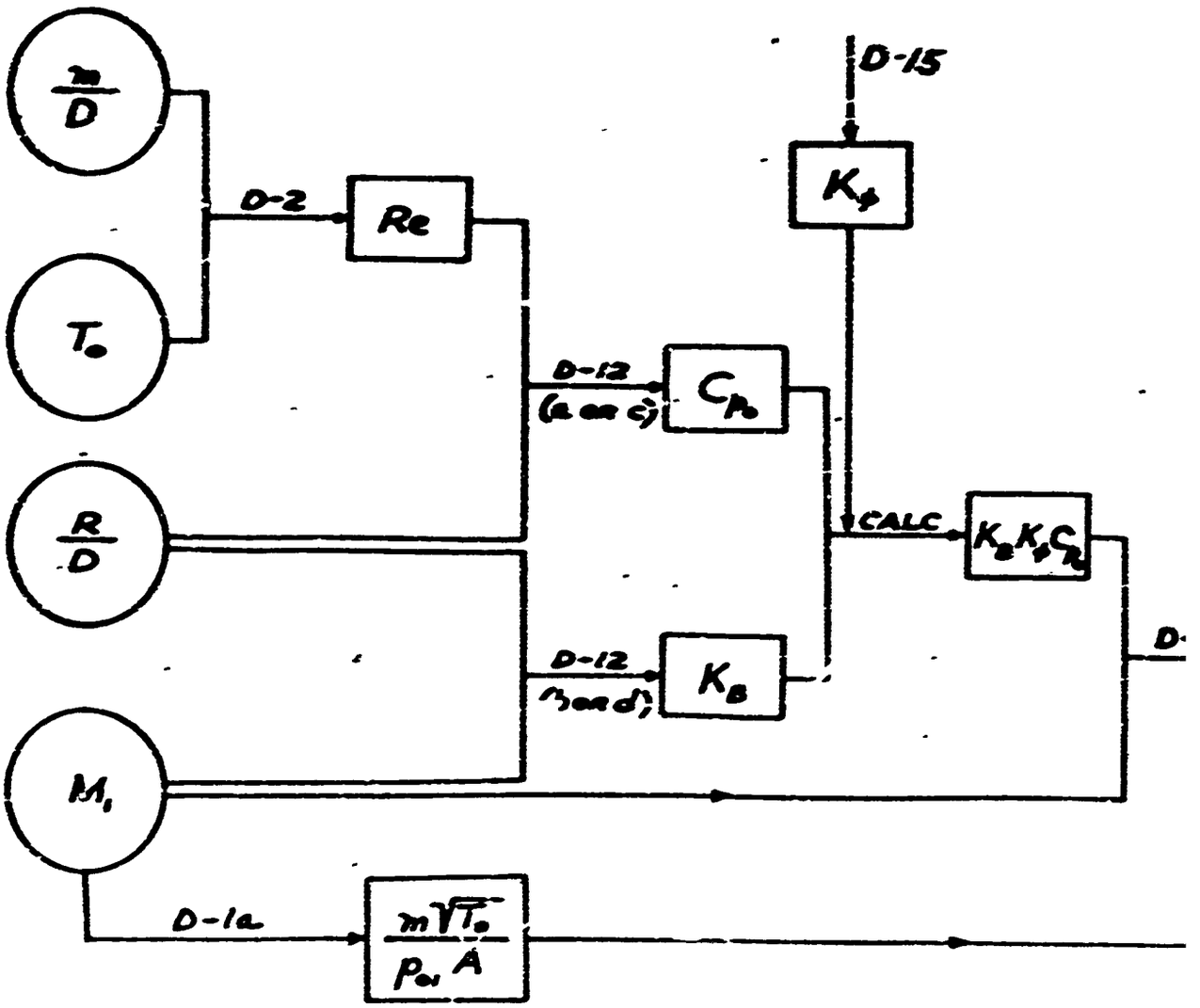
m/D
T₀
R/D
M₁
D-2
Re
D-12
(a or c)
C_p₀
D-12
(b or d)
K_B
D-15
K_φ
CALC
K_B K_φ C_p₀
D-1a
m√T₀ / p₀₁ A

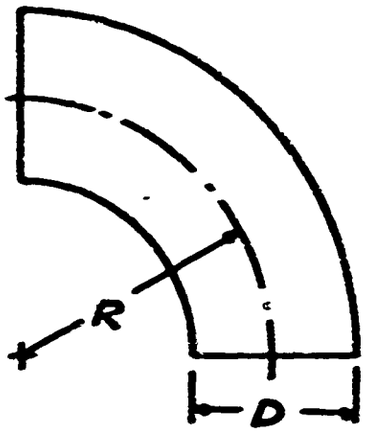

PROCEDURE P-7.1

BENDS (INTAKE)

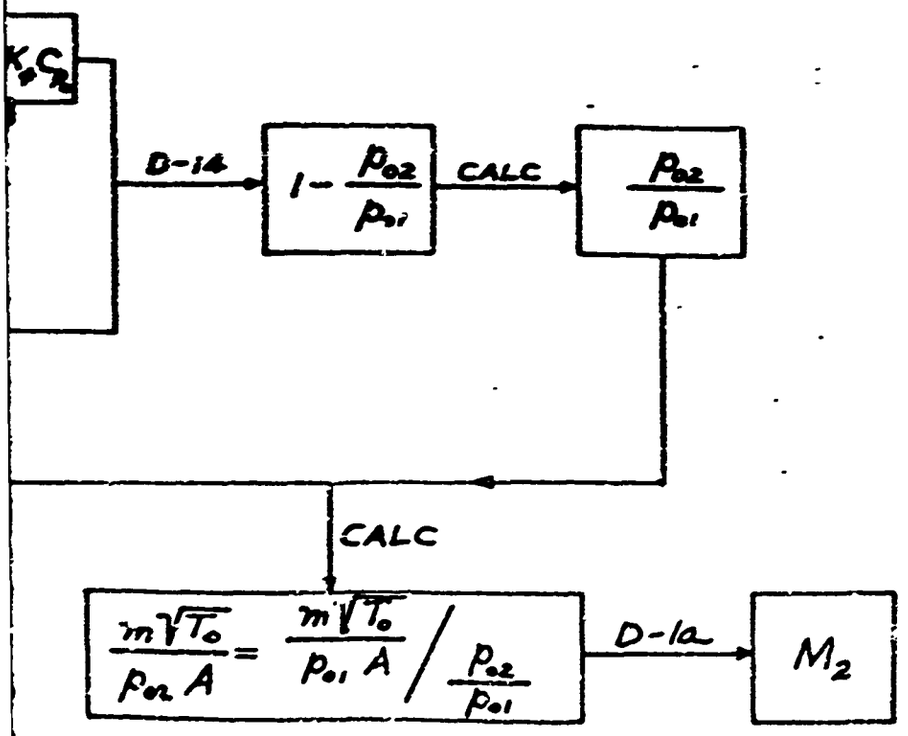

B

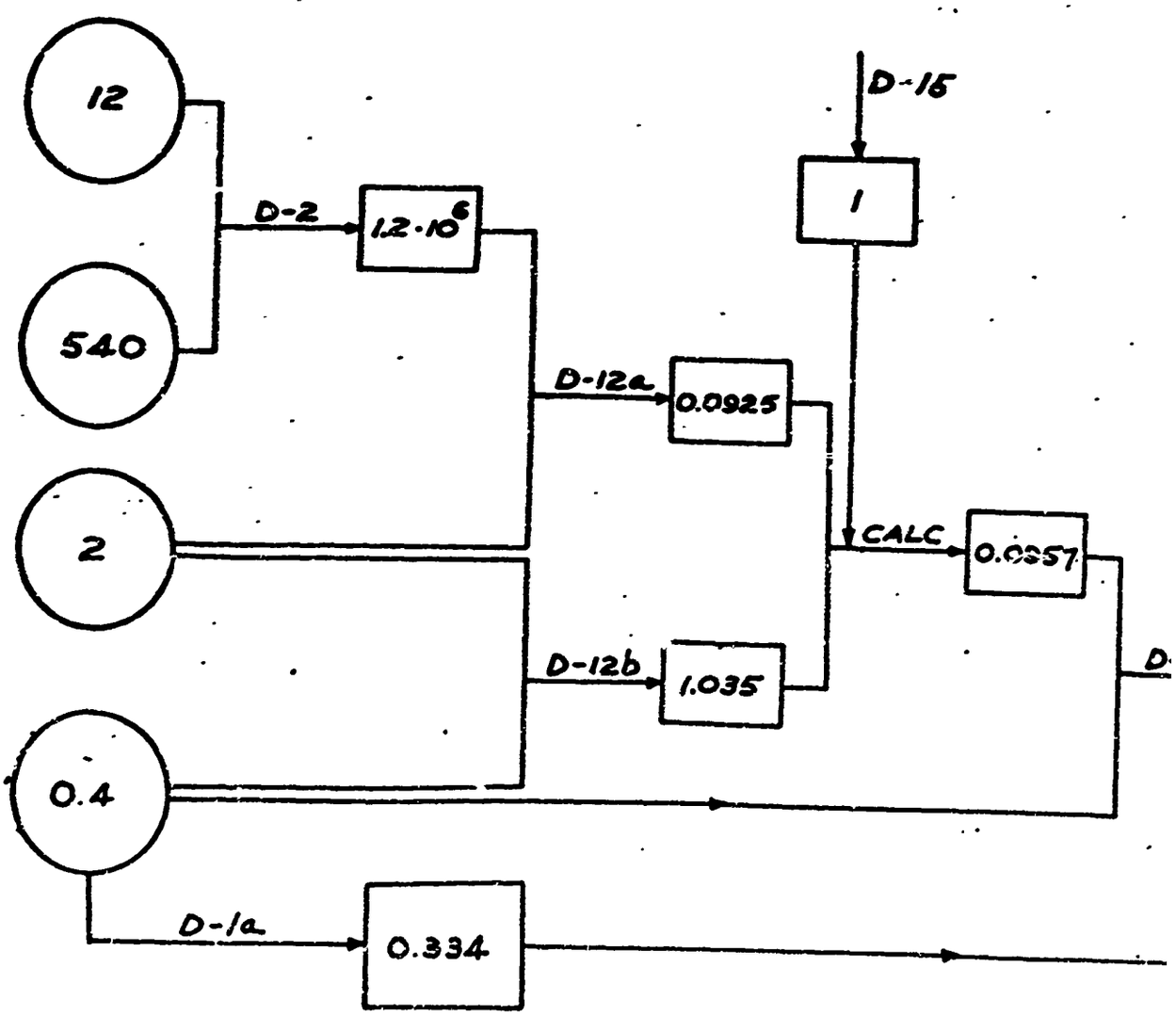
12
540
2
0.4
D-2
1.2·10^6
D-12a
0.0925
D-12b
1.035
D-15
1
CALC
0.0357
D-1a
0.334

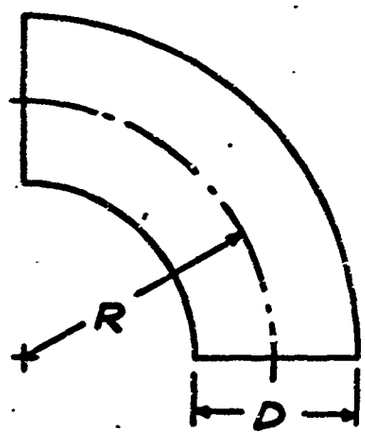

PROCEDURE P-7.1

BENDS (INTAKE)

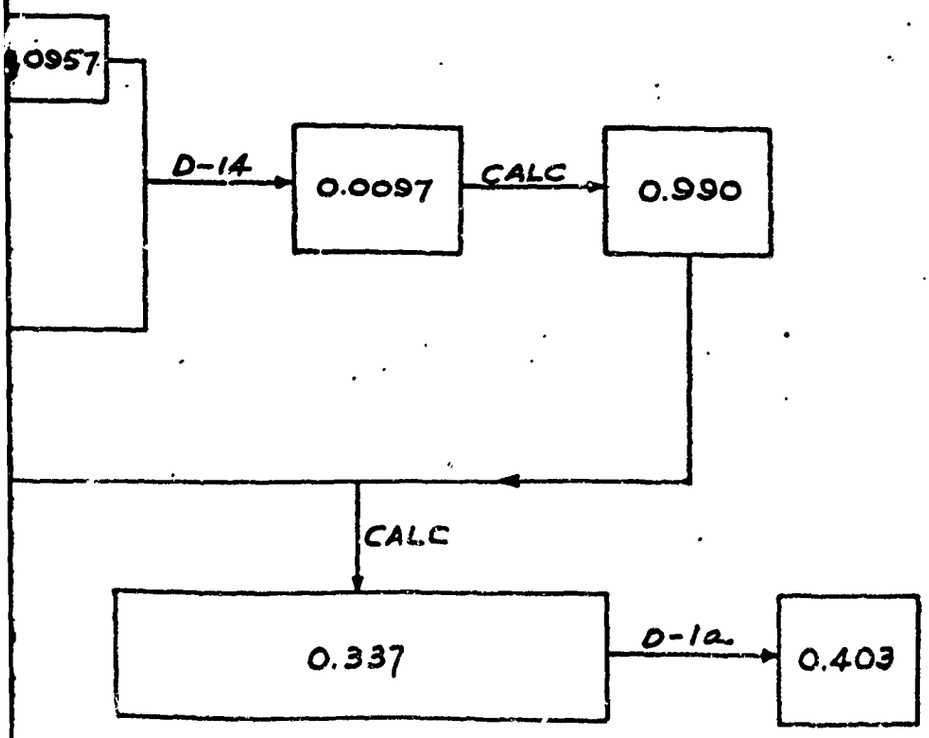

B

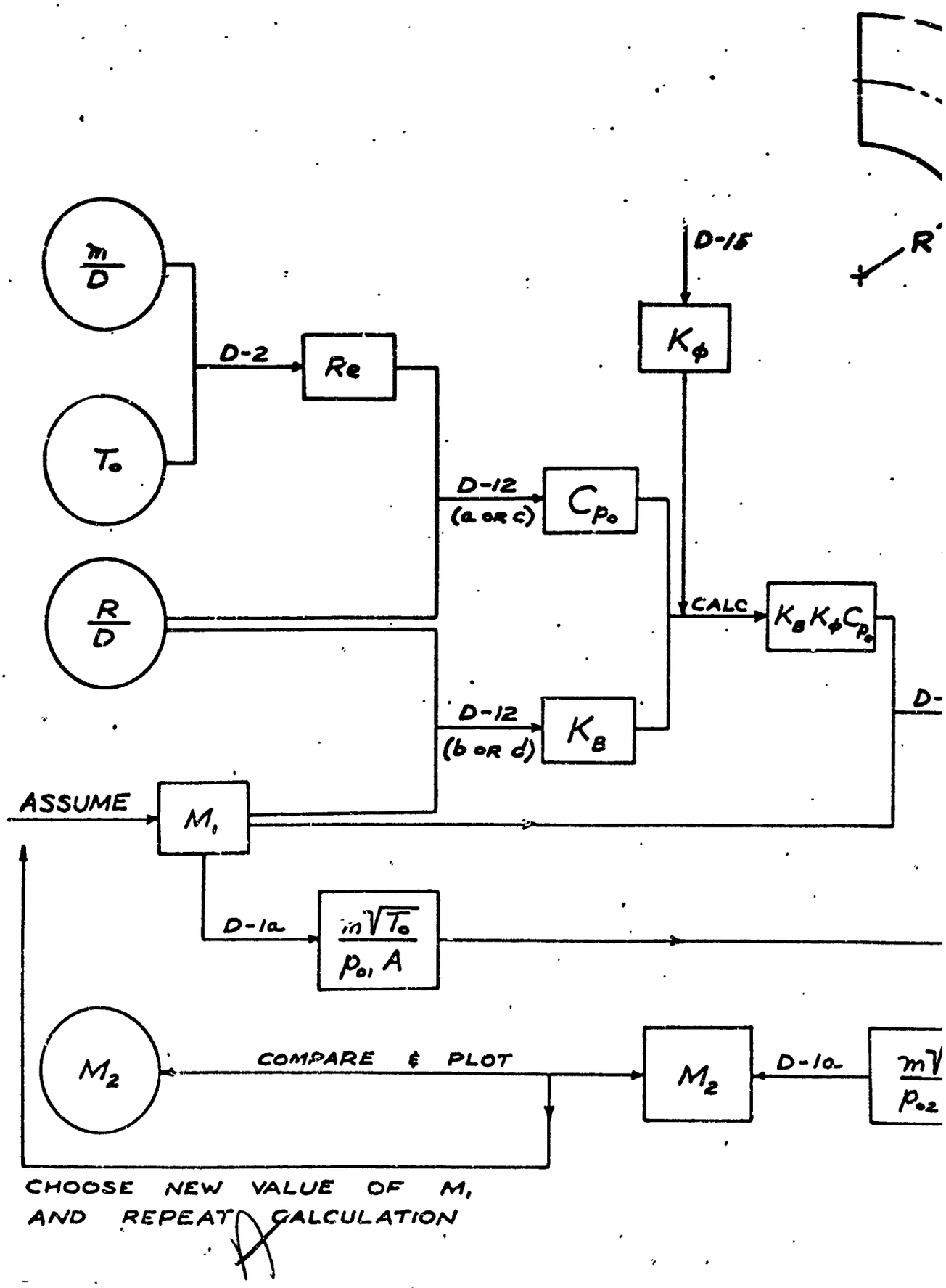
m/D
T₀
R/D
D-2
Re
D-15
Kφ
D-12
(a OR c)
Cp₀
CALC
KB Kφ Cp₀
D-12
(b OR d)
KB
ASSUME
M₁
D-1a
m√T₀ / p₀₁ A
M₂
COMPARE & PLOT
M₂
D-1a
m√ / p₀₂
CHOOSE NEW VALUE OF M₁
AND REPEAT CALCULATION

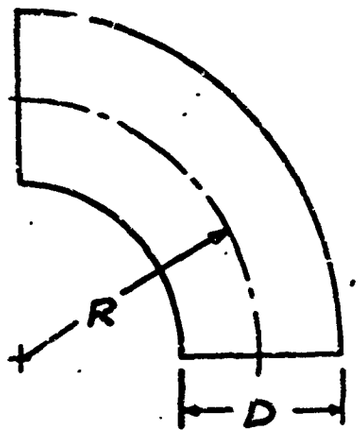

PROCEDURE P-7.2

BENDS (EXHAUST)

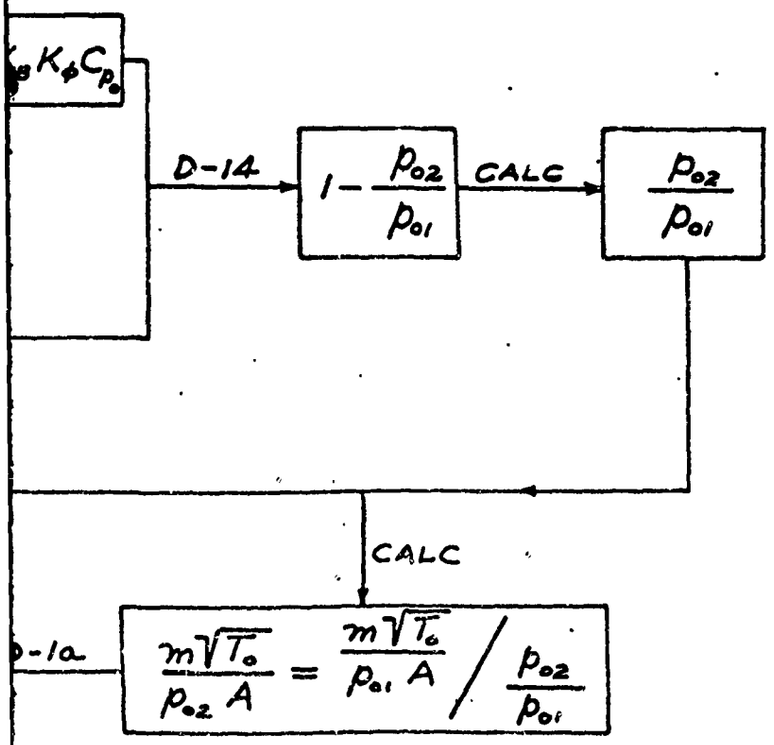

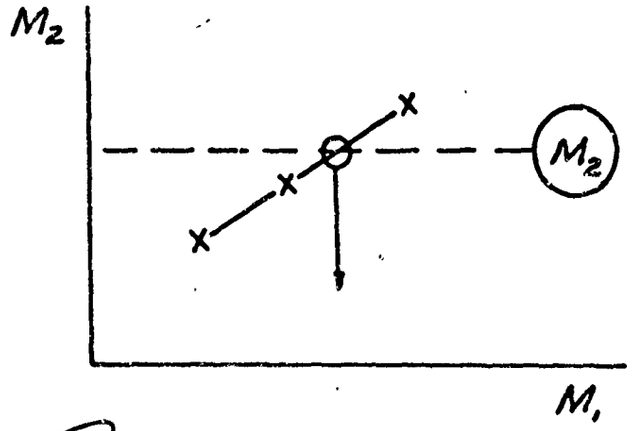

B

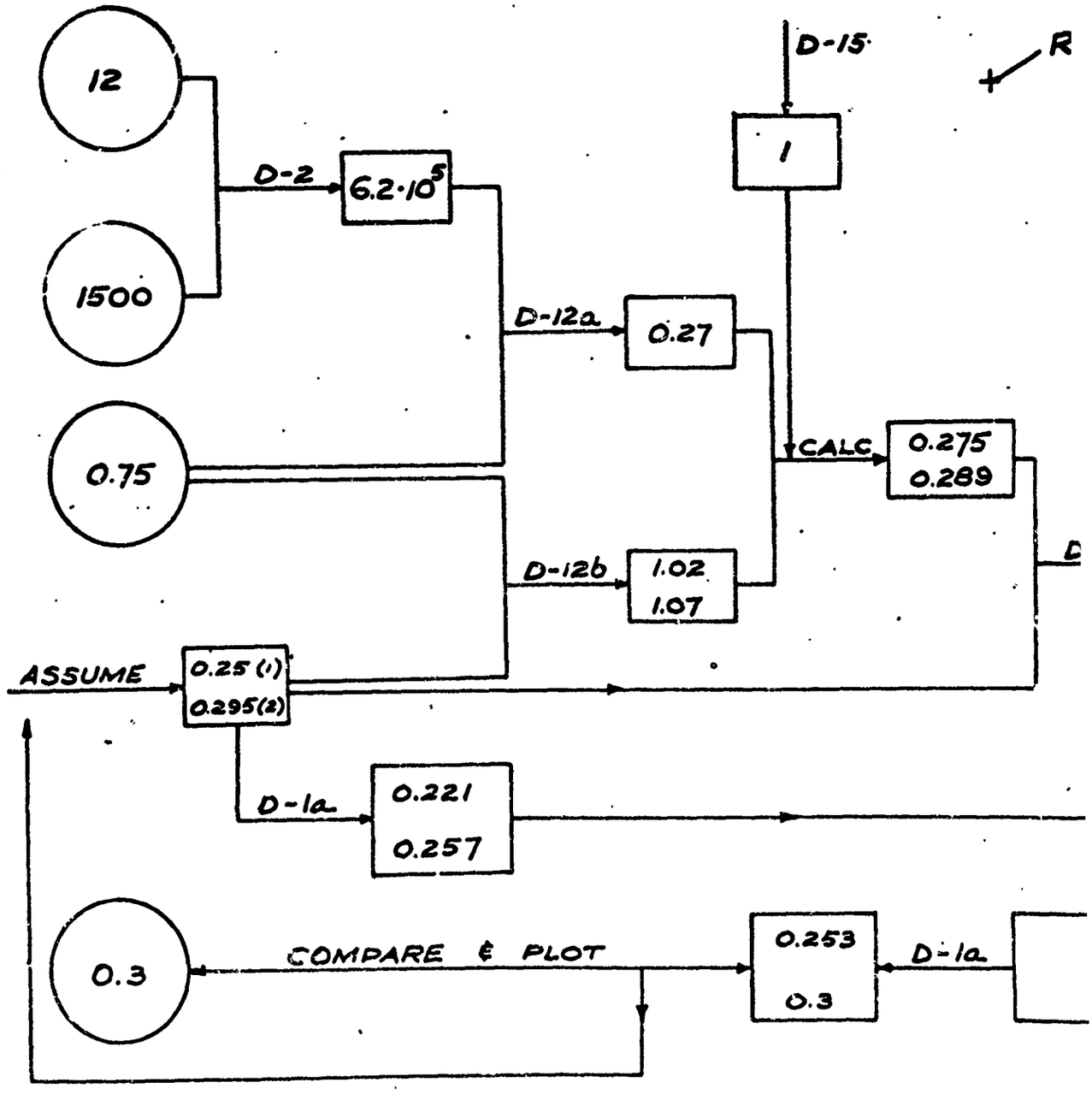
12
1500
0.75
D-2
6.2·10^5
D-15
1
D-12a
0.27
CALC
0.275
0.289
D-12b
1.02
1.07
ASSUME
0.25 (1)
0.295(2)
D-1a
0.221
0.257
0.3
COMPARE & PLOT
0.253
0.3
D-1a

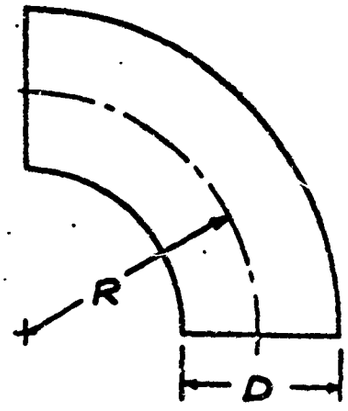

PROCEDURE P-7.2

BENDS (EXHAUST)

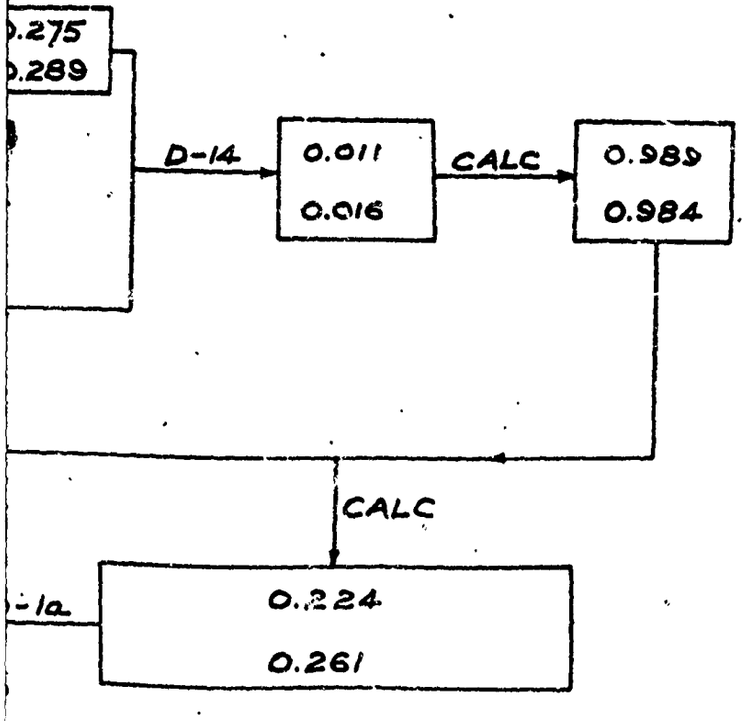

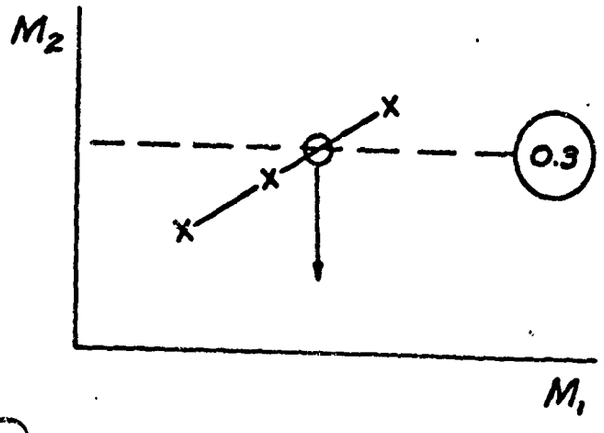

B

PROCEDURE P-8.1

SCREENS AND GRATINGS (INTAKE)

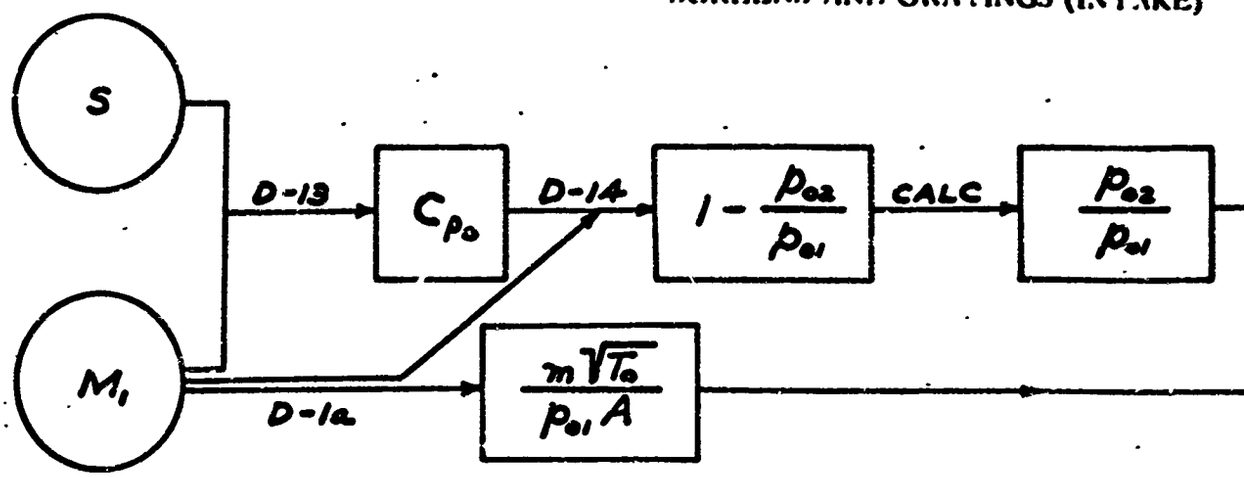

PROCEDURE P-8.2

SCREENS AND GRATINGS (EXHAUST)

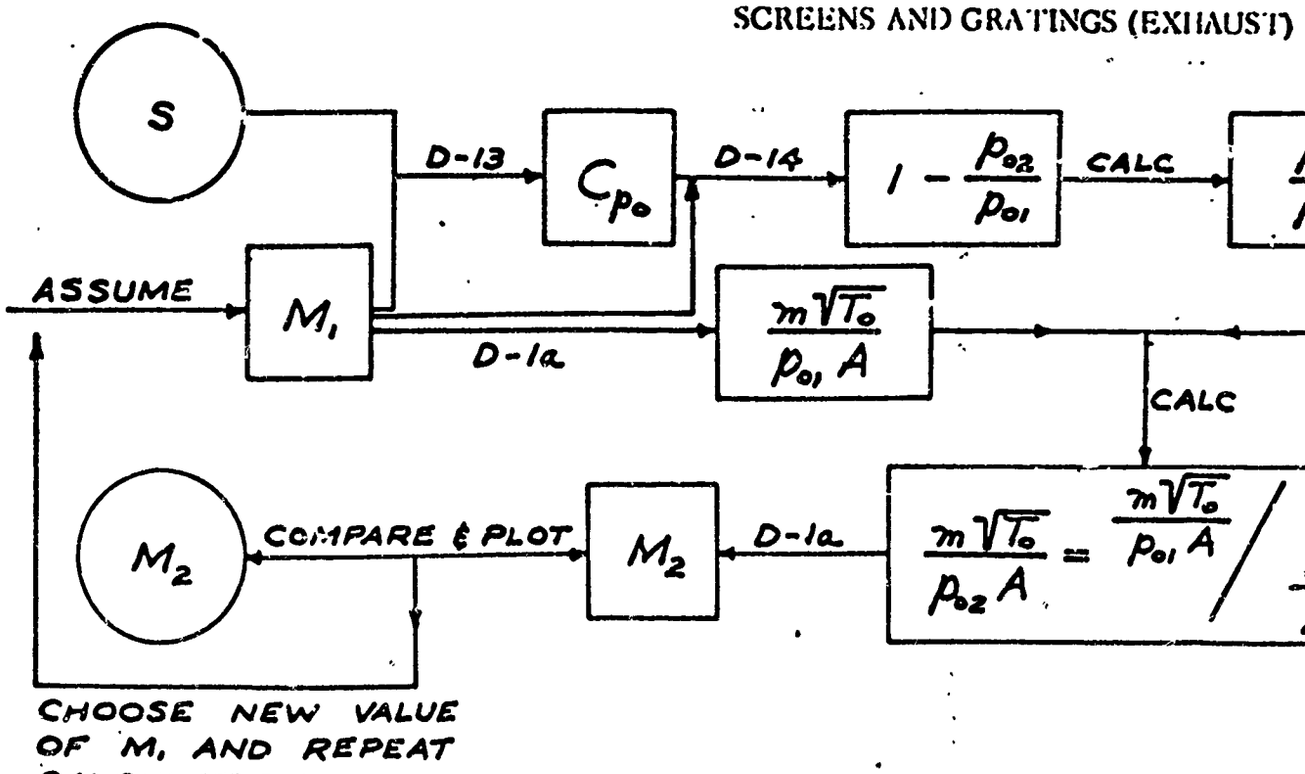

S (INTAKE)

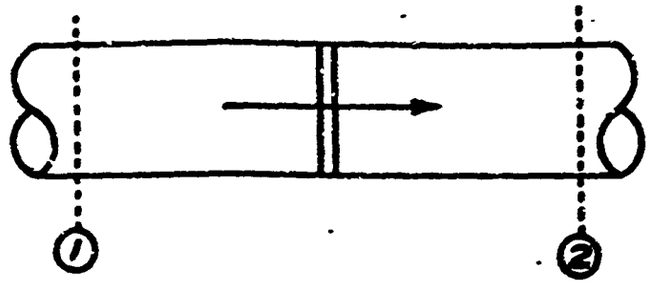

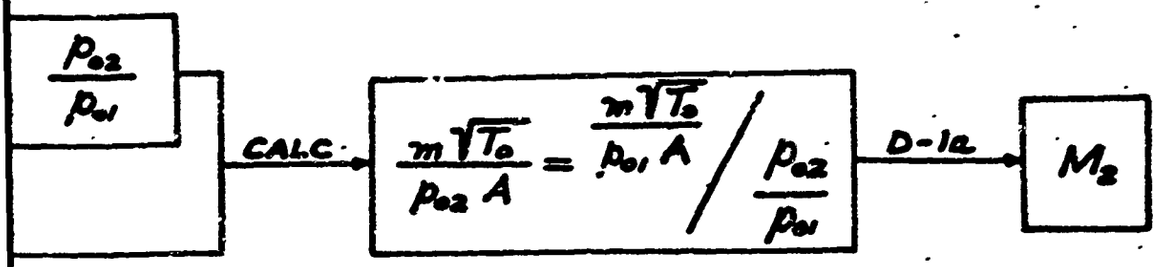

S (EXHAUST)

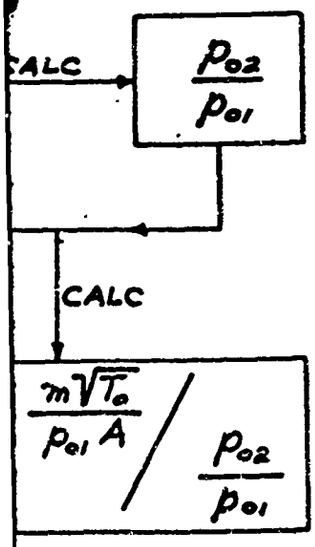

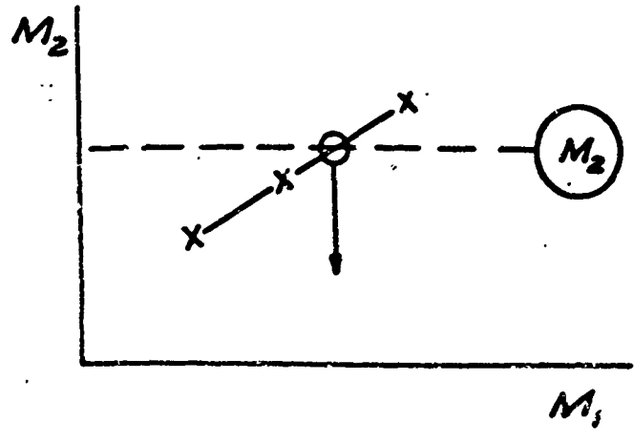

B

PROCEDURE P-8.1

SCREENS AND GRATINGS (INTAKE)

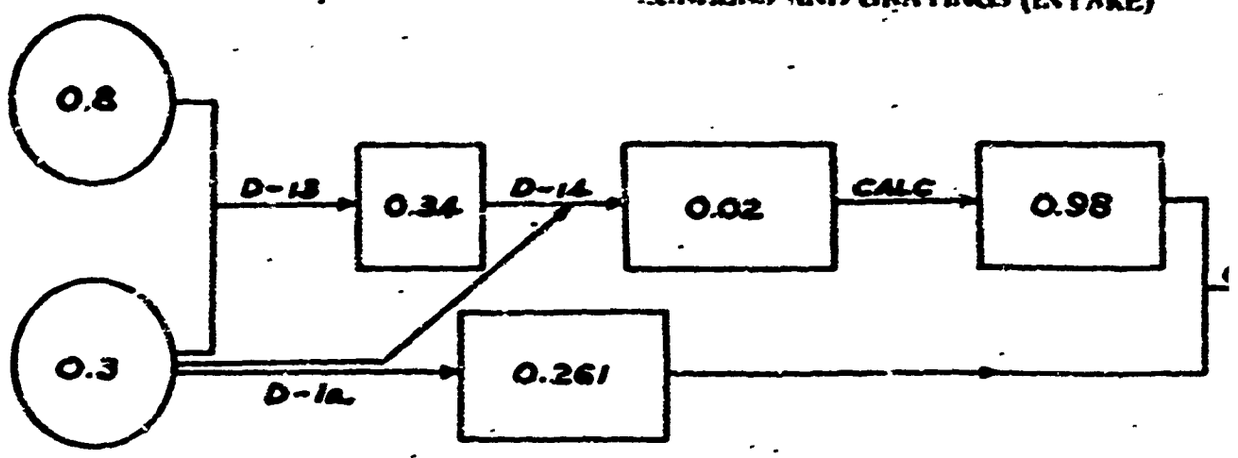

PROCEDURE P-8.2

SCREENS AND GRATINGS (EXHAUST)

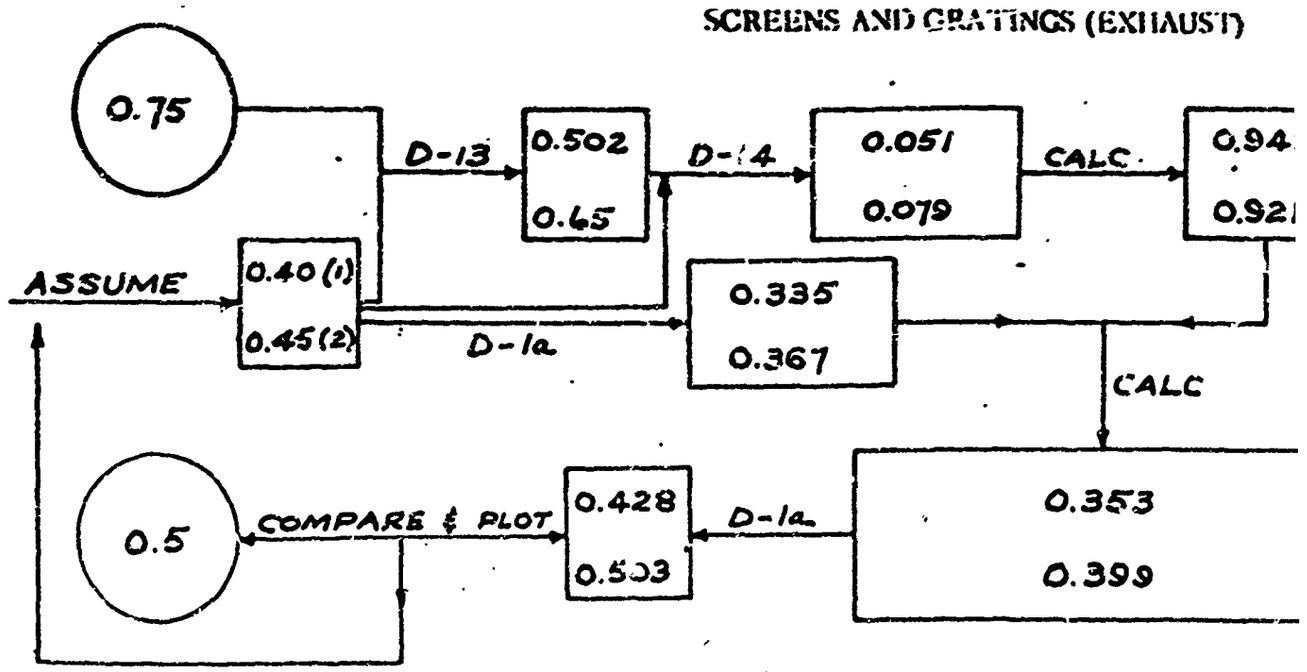

(INTAKE)

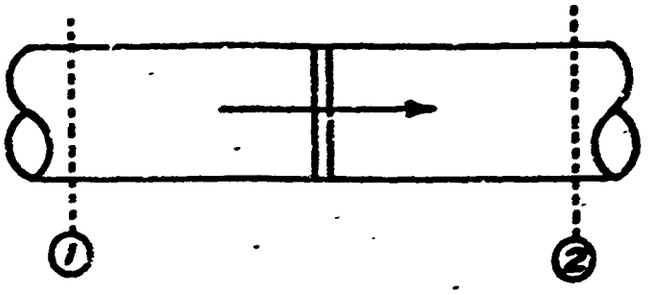

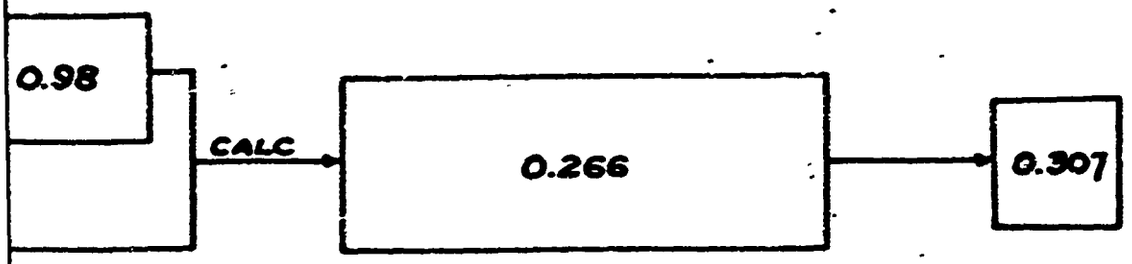

(EXHAUST)

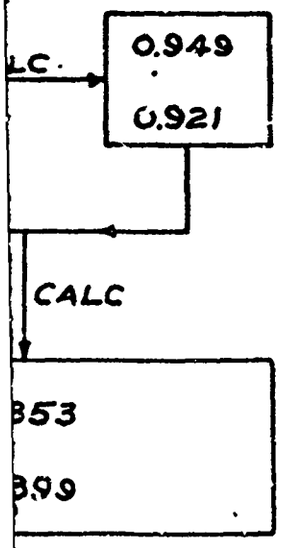

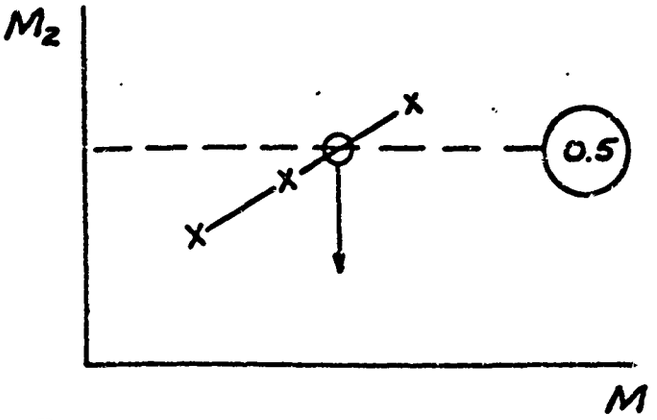

PROCEDURE P-9.1

DUCT INLETS, ALTERNATE PROCEDURE FOR BELLMOUTH ENTRANCE,

$$\frac{L}{D} > 30$$

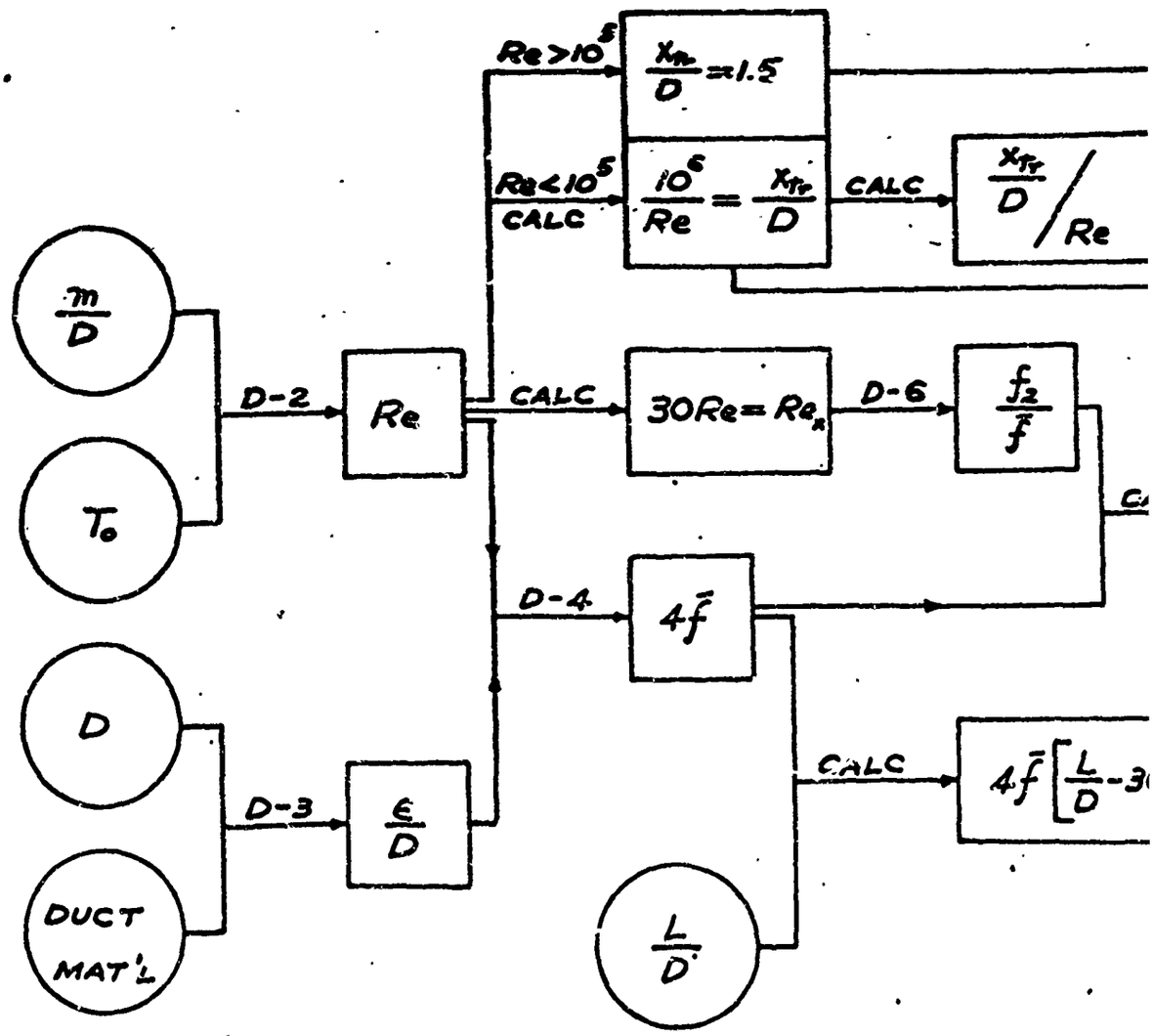

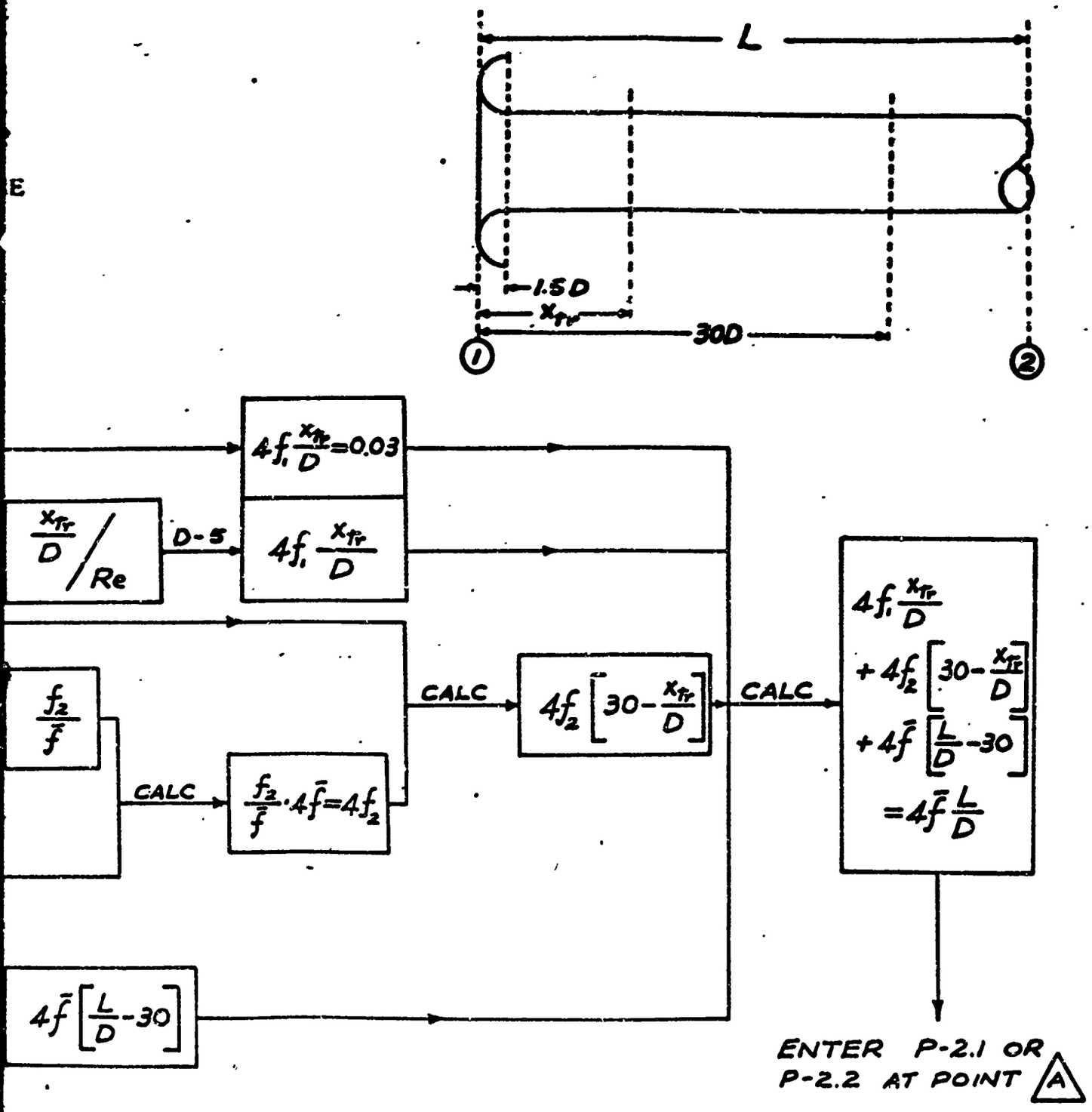
L
1.5D
x_{Tr}
30D
1
2
$4f_1\frac{x_{Tr}}{D}=0.03$
$\frac{x_{Tr}}{D}/Re$
D-5
$4f_1\frac{x_{Tr}}{D}$
$\frac{f_2}{\bar{f}}$
CALC
$\frac{f_2}{\bar{f}}\cdot 4\bar{f}=4f_2$
CALC
$4f_2\left[30-\frac{x_{Tr}}{D}\right]$
CALC
$4f_1\frac{x_{Tr}}{D}$
$+4f_2\left[30-\frac{x_{Tr}}{D}\right]$
$+4\bar{f}\left[\frac{L}{D}-30\right]$
$=4\bar{f}\frac{L}{D}$
$4\bar{f}\left[\frac{L}{D}-30\right]$
ENTER P-2.1 OR
P-2.2 AT POINT A

B

PROCEDURE P-9.1

DUCT INLETS, ALTERNATE PROCEDURE FOR BELLMOUTH ENTRANCE,

$$\frac{L}{D} > 30$$

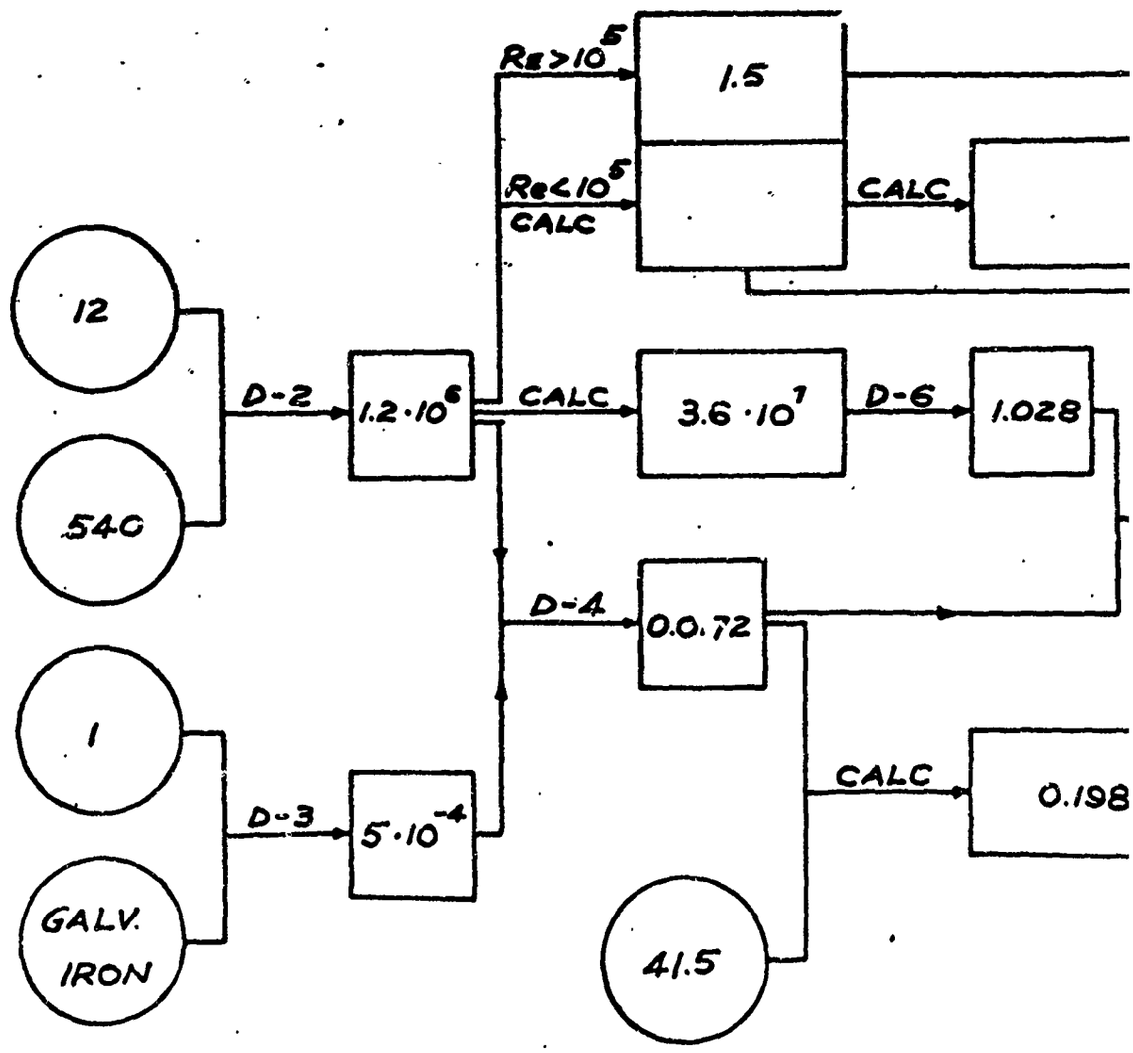

RE

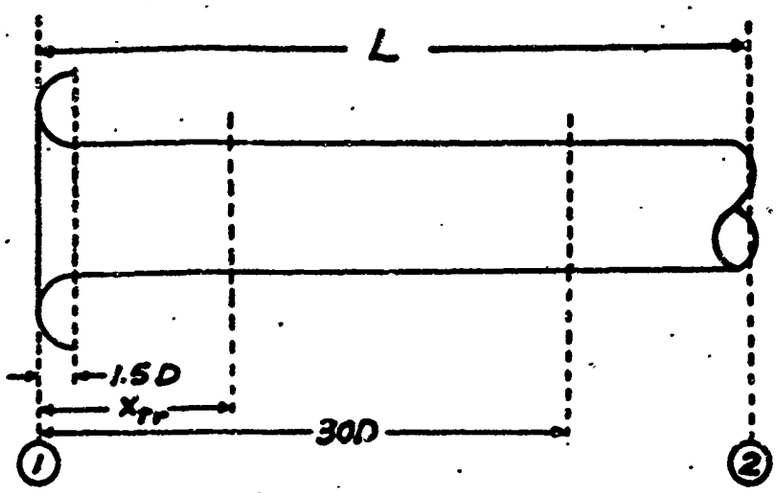
L
1.5D
x_{tr}
30D
1
2

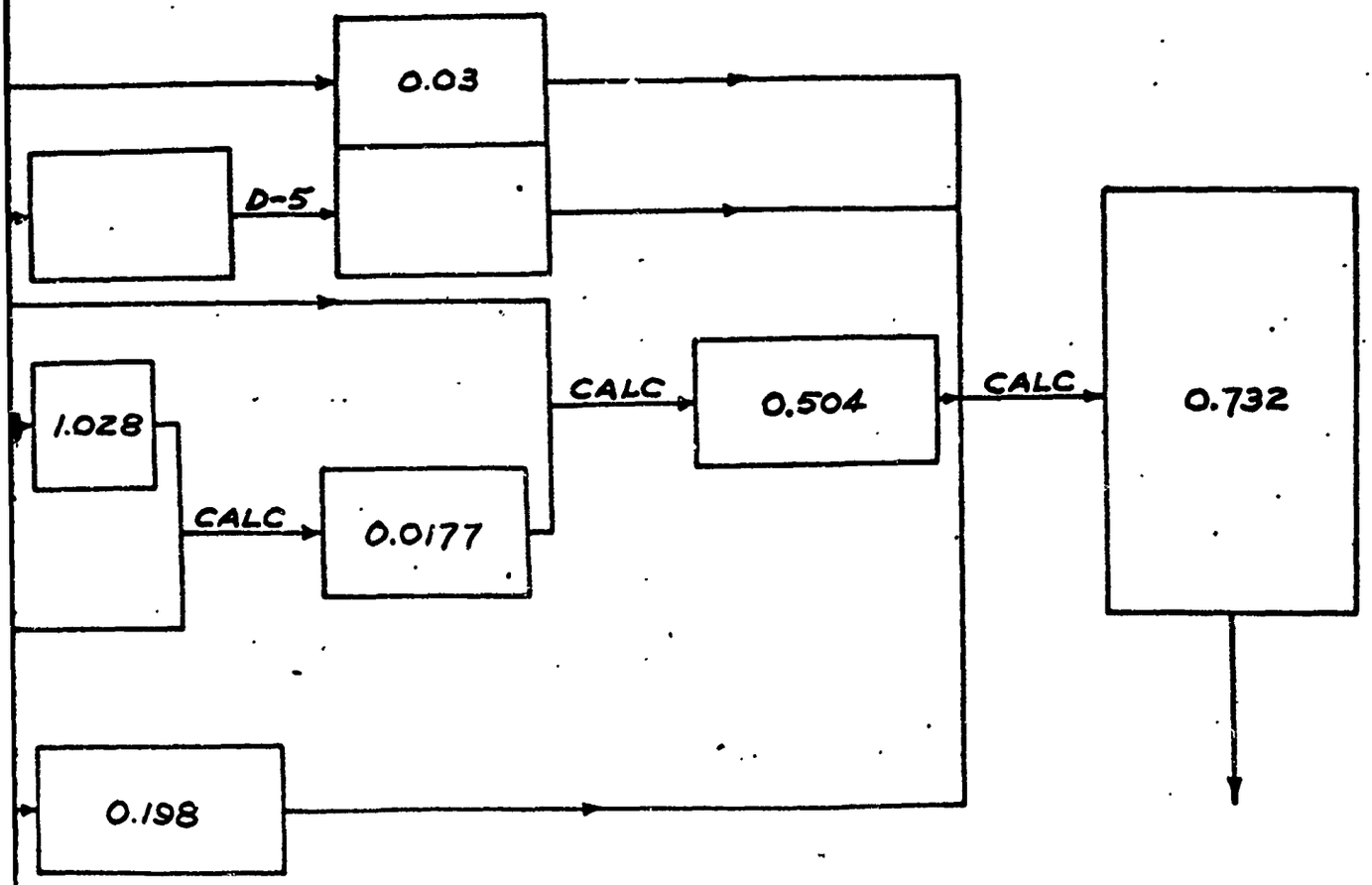
0.03
D-5
1.028
CALC
0.0177
CALC
0.504
CALC
0.732
0.198

B

PROCEDURE P-9.2

DUCT INLETS, ALTERNATE PROCEDURE FOR BELLMOUTH ENTRANCE,

$\frac{L}{D} < 30$, TEST FOR PROCEDURE

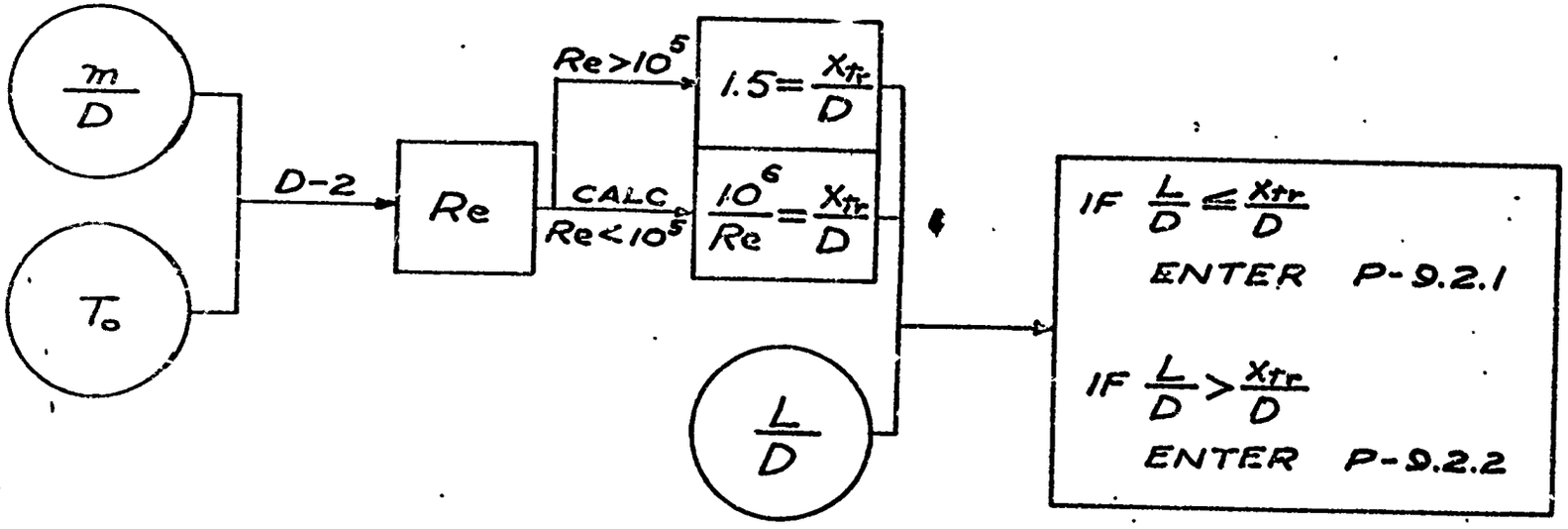

PROCEDURE P-9.2

DUCT INLETS, ALTERNATE PROCEDURE FOR BELLMOUTH ENTRANCE,

$\frac{L}{D} < 30$, TEST FOR PROCEDURE

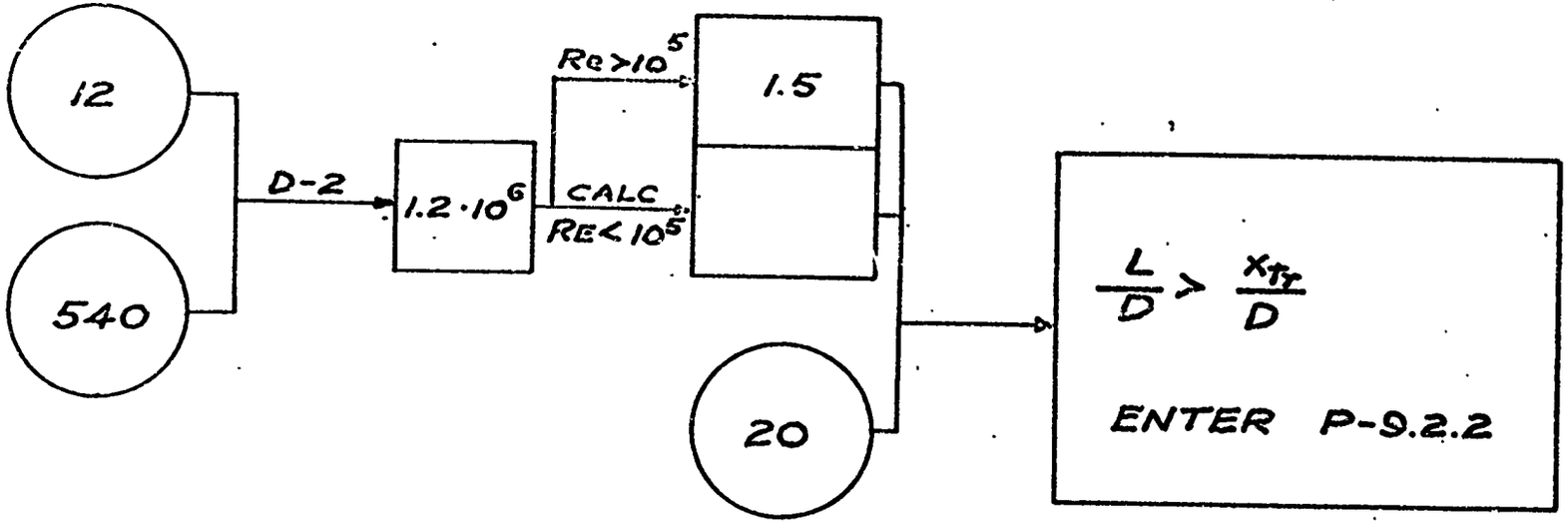

PROCEDURE

DUCT INL
FOR BELLMC

$\frac{L}{D} <$

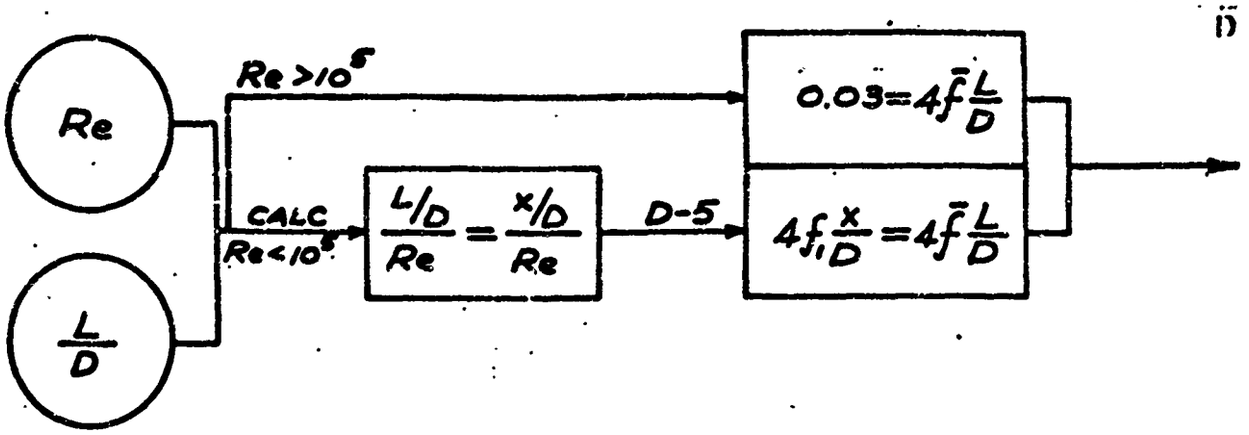

EN
AT

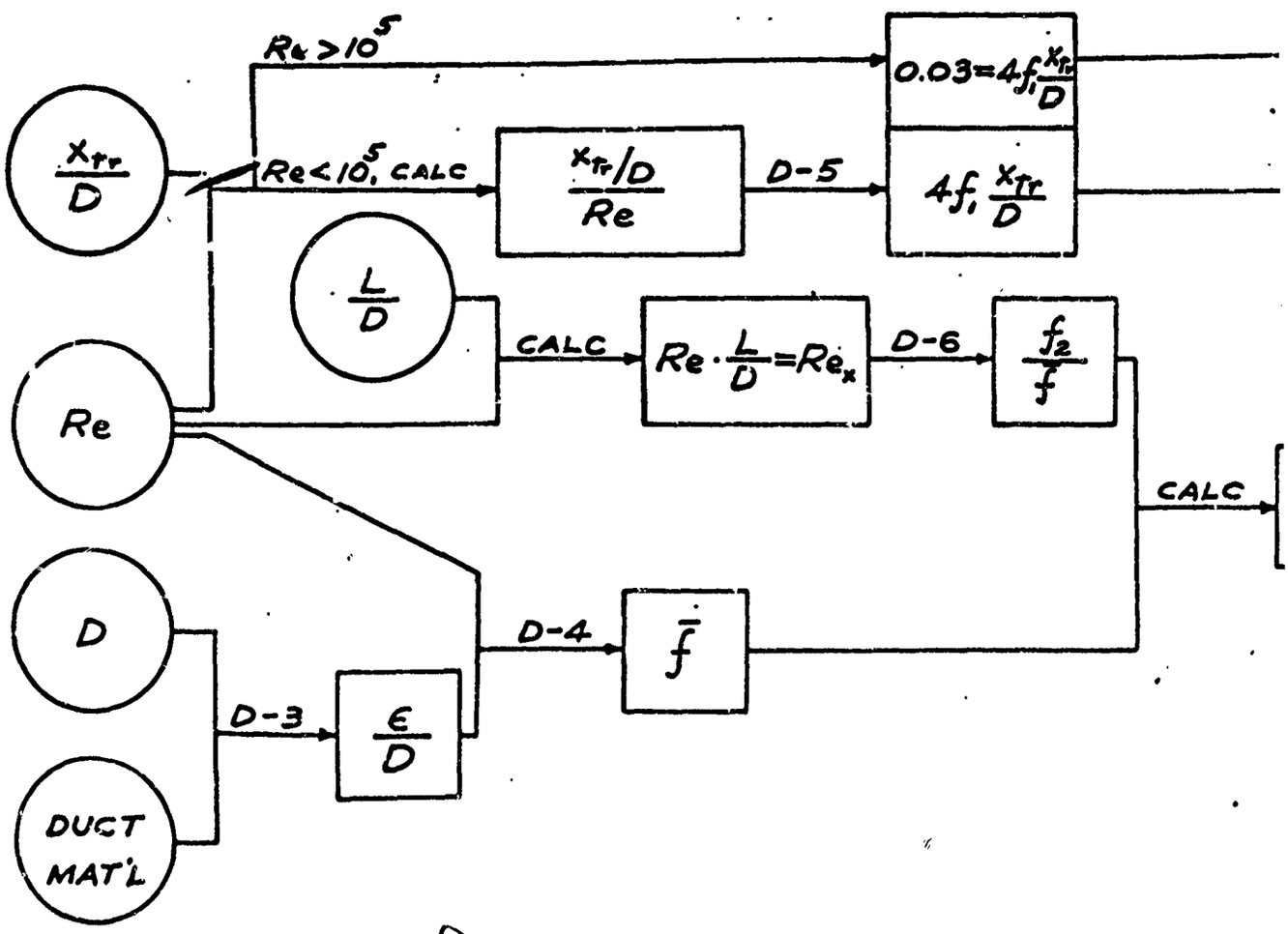

PROCEDURE P-9.2.1

DUCT INLETS, ALTERNATE PROCEDURE FOR BELLMOUTH ENTRANCE,

$$\frac{L}{D} < \frac{X_{tr}}{D}$$

ENTER P-2.1 OR P-2.2 AT POINT A

PROCEDURE P-9.2.2

DUCT INLETS, ALTERNATE PROCEDURE FOR BELLMOUTH ENTRANCE,

$$\frac{X_{tr}}{D} < \frac{L}{D} < 30$$

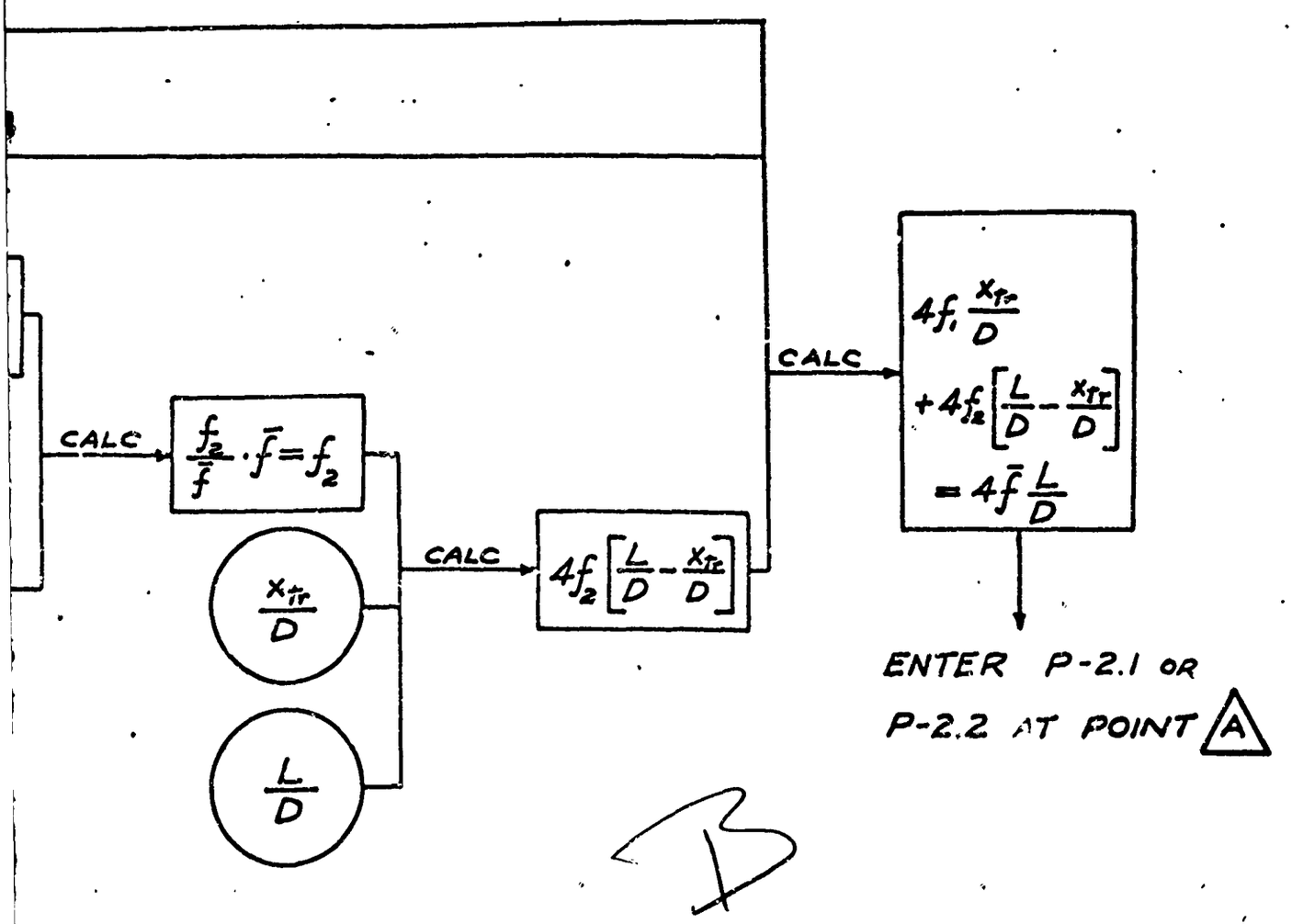

B

PROCEDURE

DUCT INLET
FOR BELLM

$\frac{L}{D} <$

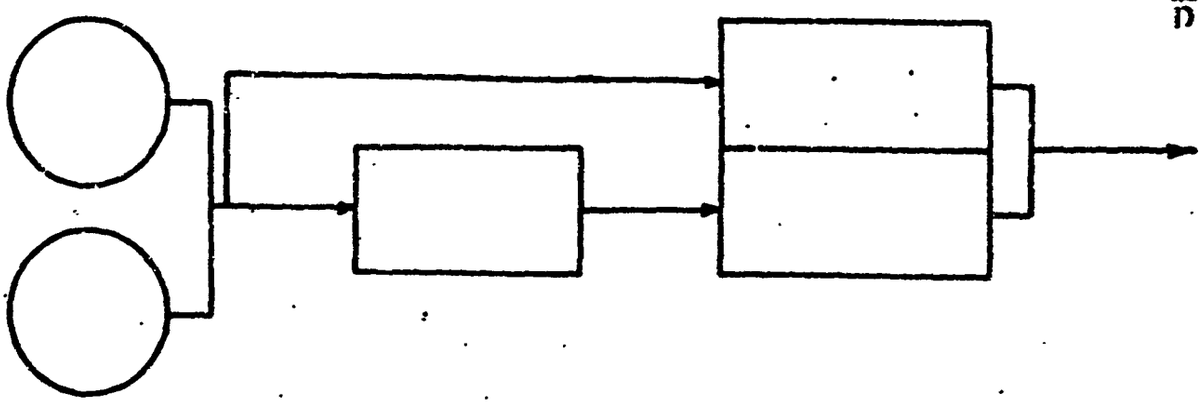

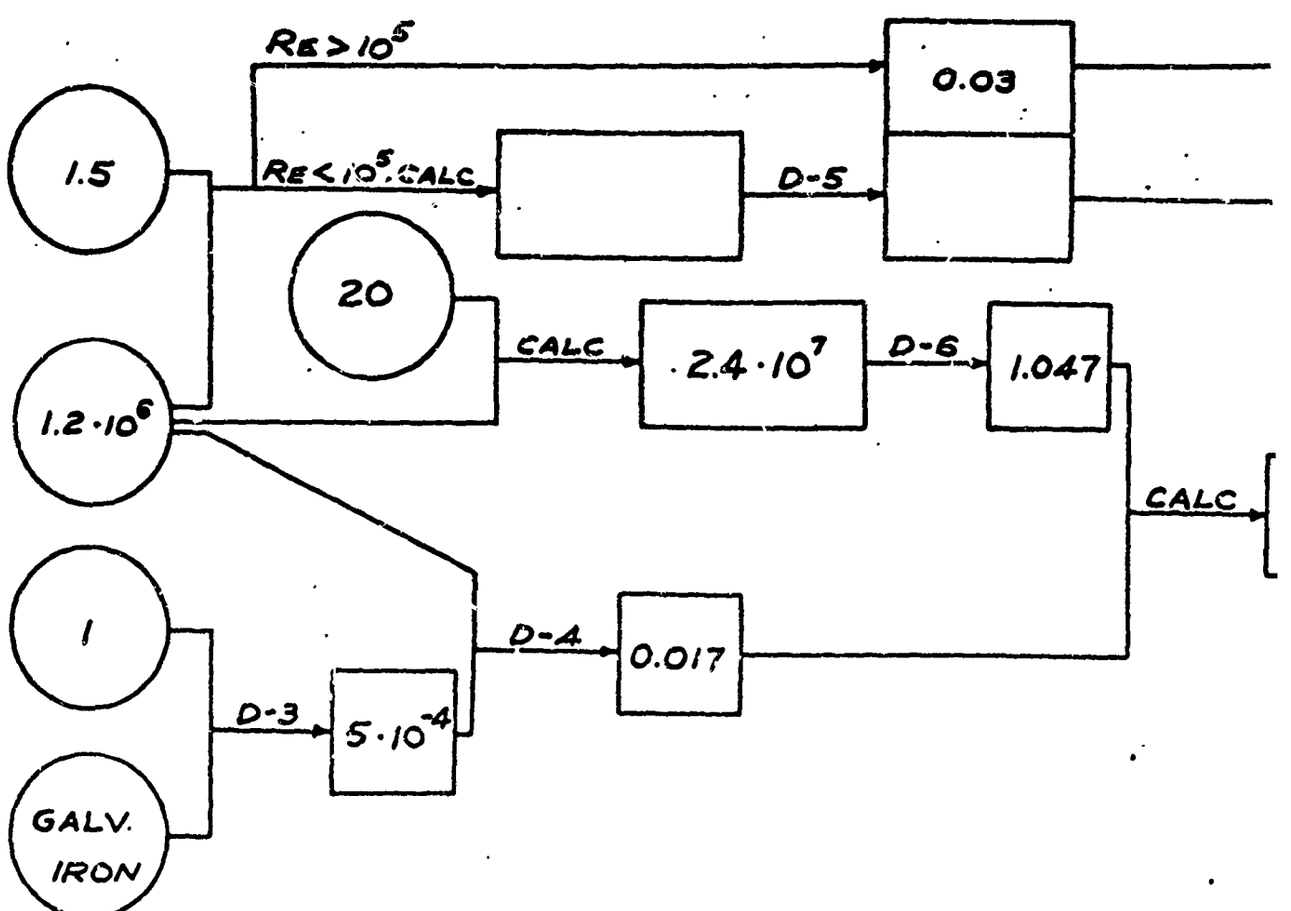

PROCEDURE P-9.2.1

DUCT INLETS, ALTERNATE PROCEDURE FOR BELLMOUTH ENTRANCE,

$$\frac{L}{D} < \frac{X_{tr}}{D}$$

PROCEDURE P-9.2.2

DUCT INLETS, ALTERNATE PROCEDURE FOR BELLMOUTH ENTRANCE,

$$\frac{X_{tr}}{D} < \frac{L}{D} < 30$$

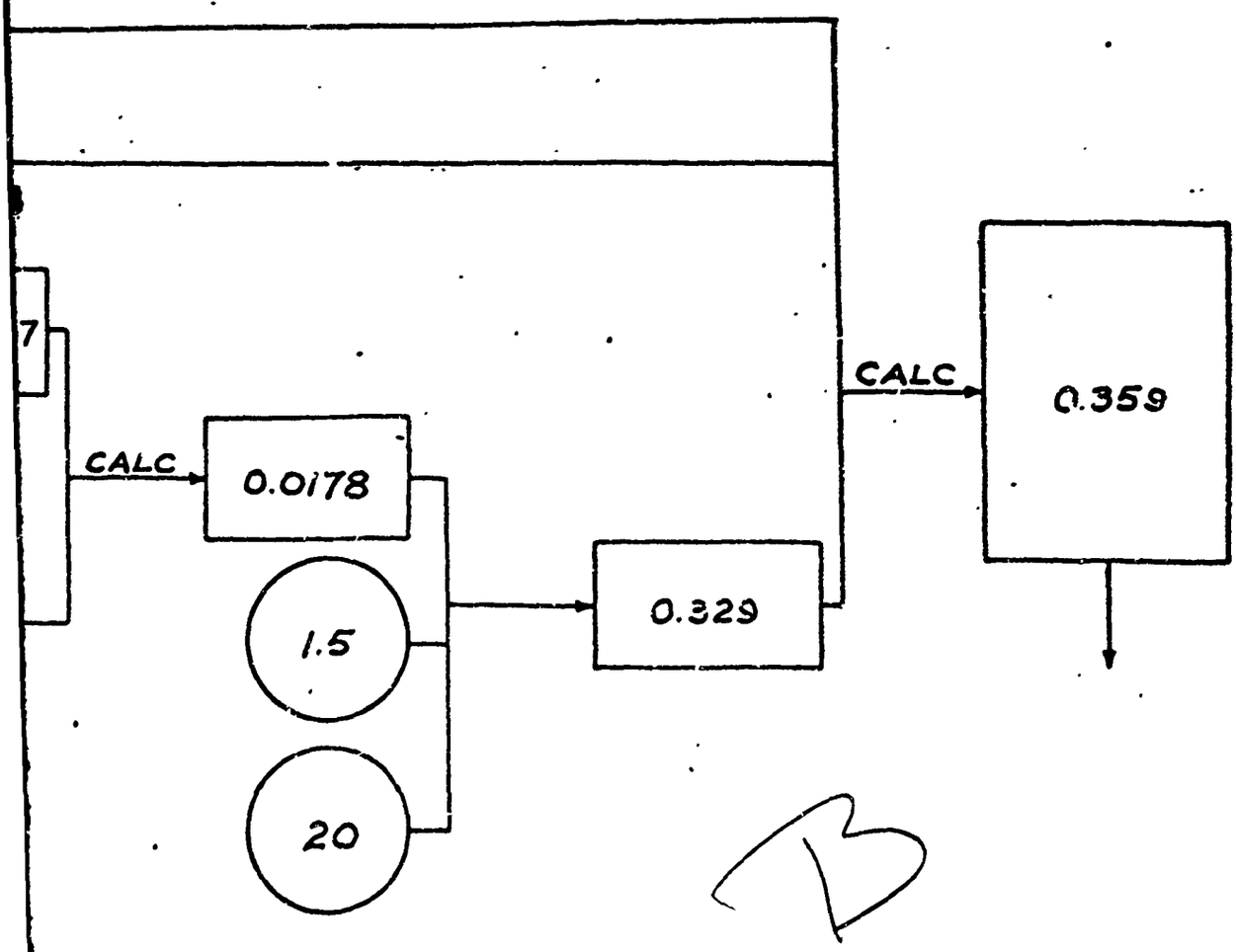

PROCEDURE P-10

DUCT INLET, ALTERNATE PROCEDURE FOR SHARP-EDGED ENTRANCE

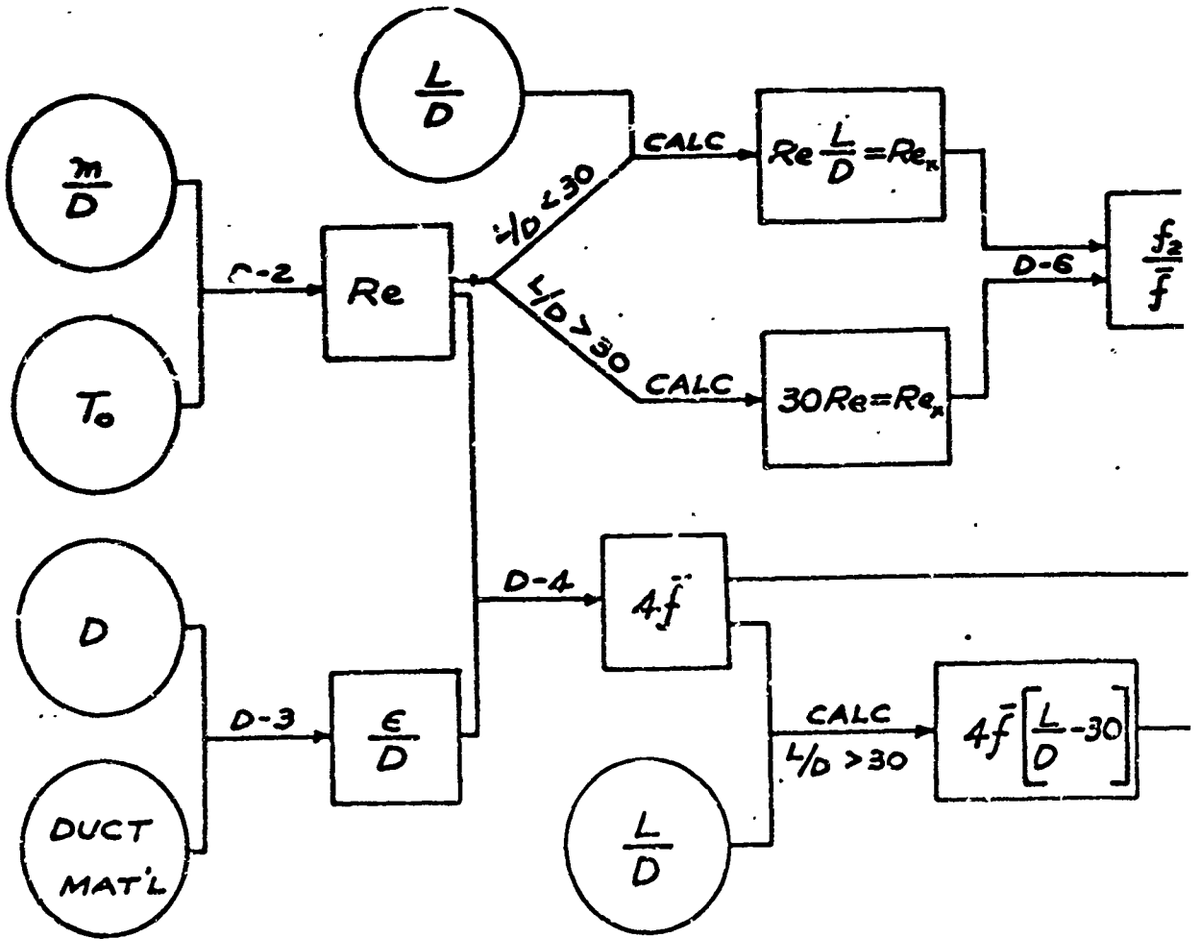

ROCEDURE
E

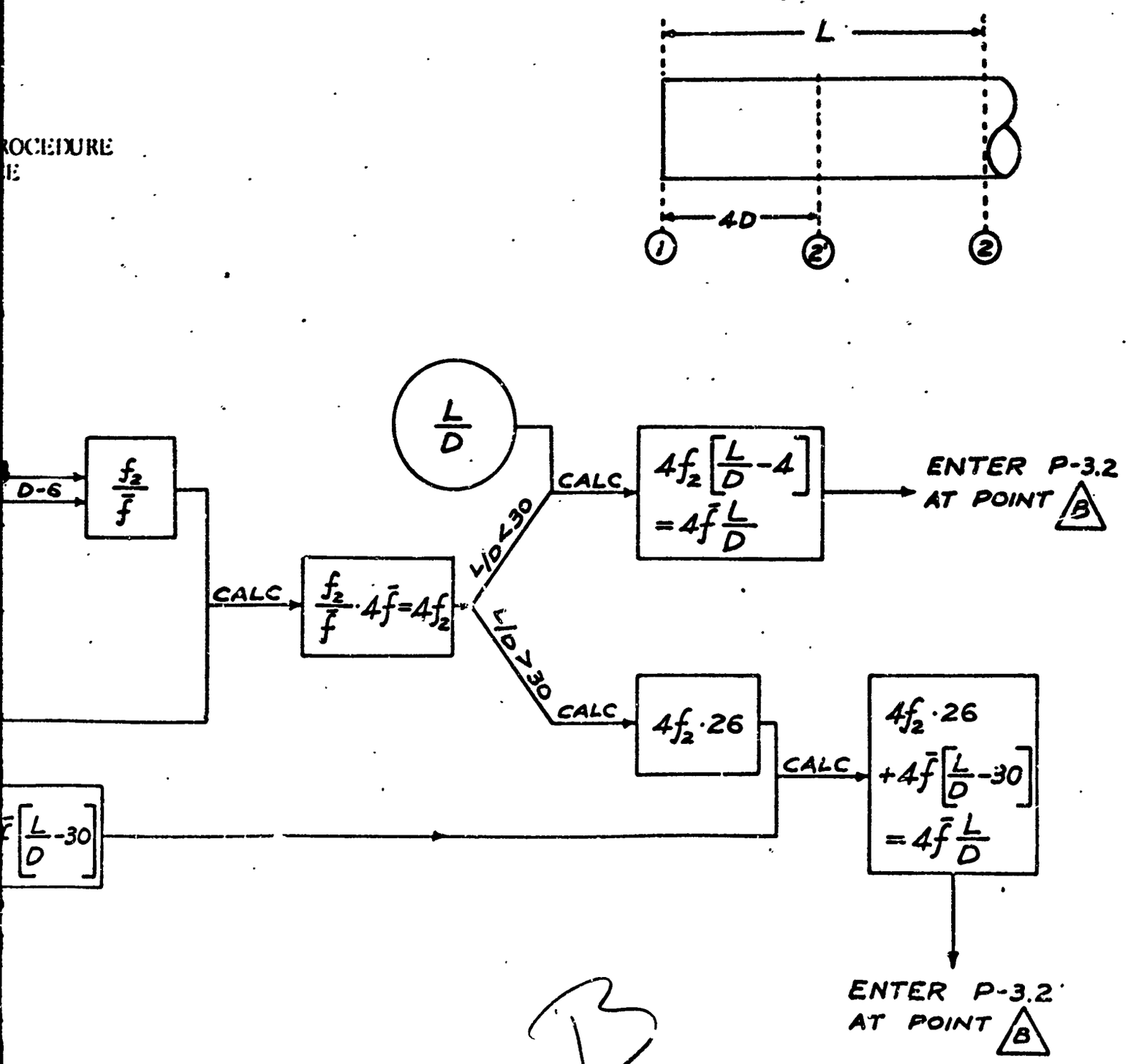
L
4D
1
2
2
D-6
$\frac{f_2}{\bar{f}}$
CALC
$\frac{f_2}{\bar{f}} \cdot 4\bar{f} = 4f_2$
$\frac{L}{D}$
L/D < 30
CALC
$4f_2\left[\frac{L}{D} - 4\right] = 4\bar{f}\frac{L}{D}$
ENTER P-3.2 AT POINT B
L/D > 30
CALC
$4f_2 \cdot 26$
CALC
$4f_2 \cdot 26 + 4\bar{f}\left[\frac{L}{D} - 30\right] = 4\bar{f}\frac{L}{D}$
$\bar{f}\left[\frac{L}{D} - 30\right]$
ENTER P-3.2 AT POINT B

B

PROCEDURE P-10

DUCT INLET, ALTERNATE PROCEDURE
FOR SHARP-EDGED ENTRANCE

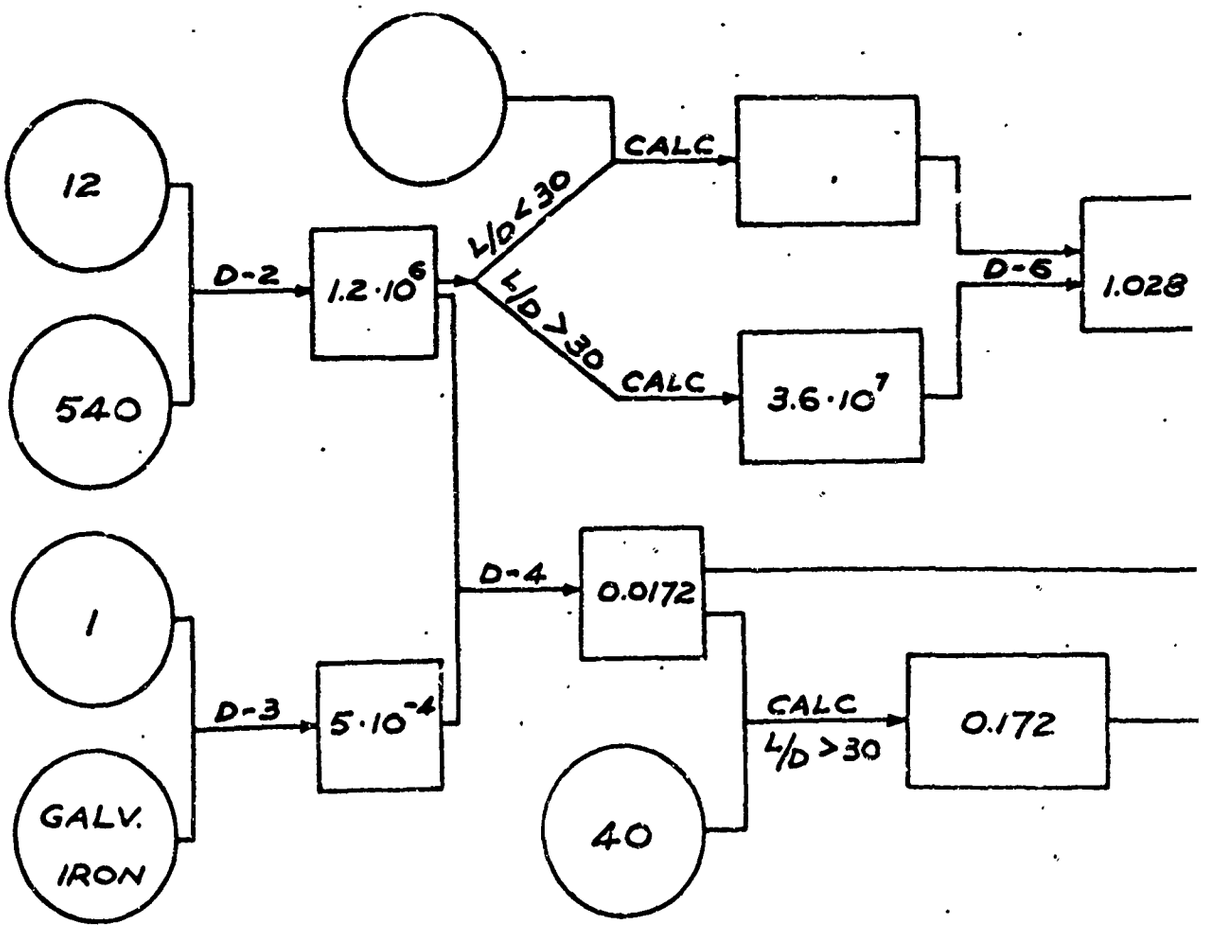

ROCEDURE
IE

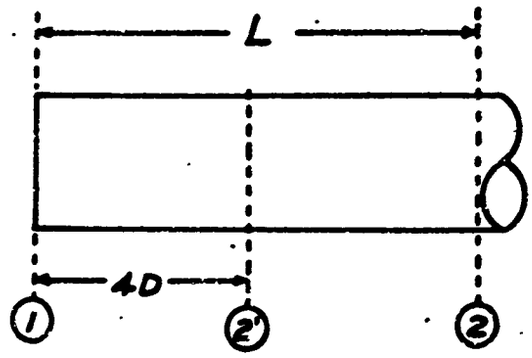

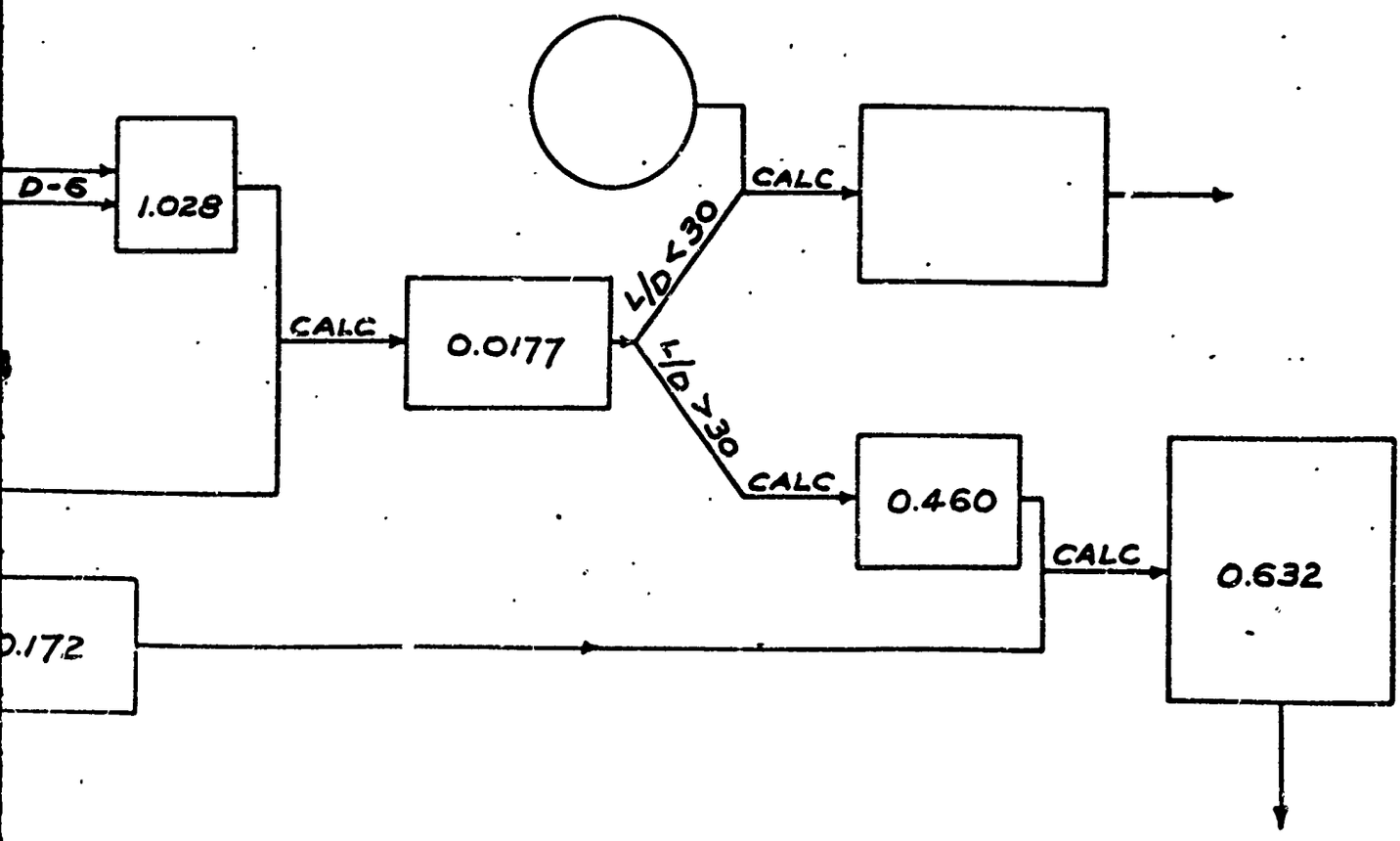

B

ENGRAVING 334-3, 10 X 10 TO THE HALF INCH
WHEN ORDERING STATE COLOR DRAWING OR TRACING PAPER
MADE IN U.S.A.
100% RAG PAPER

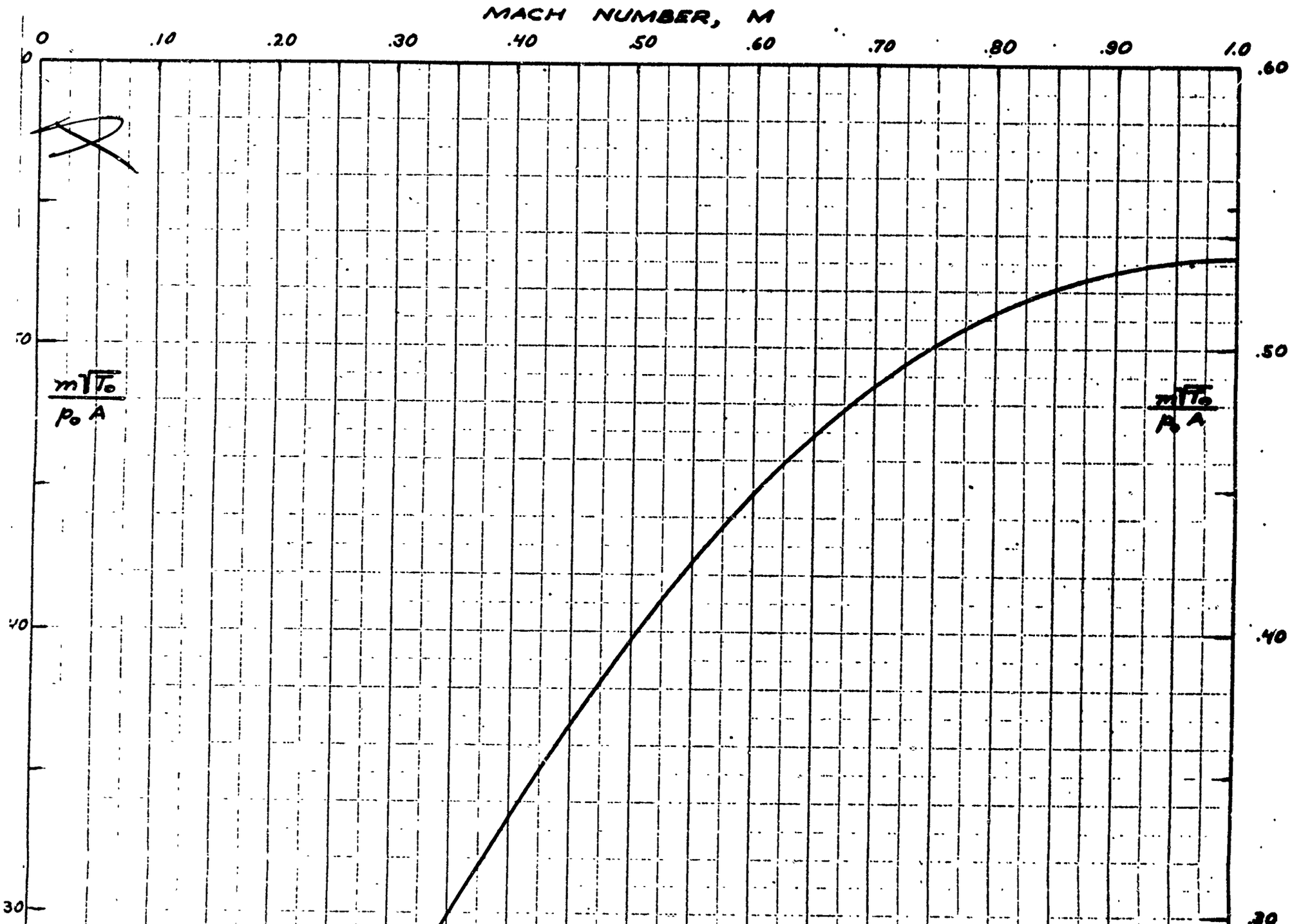

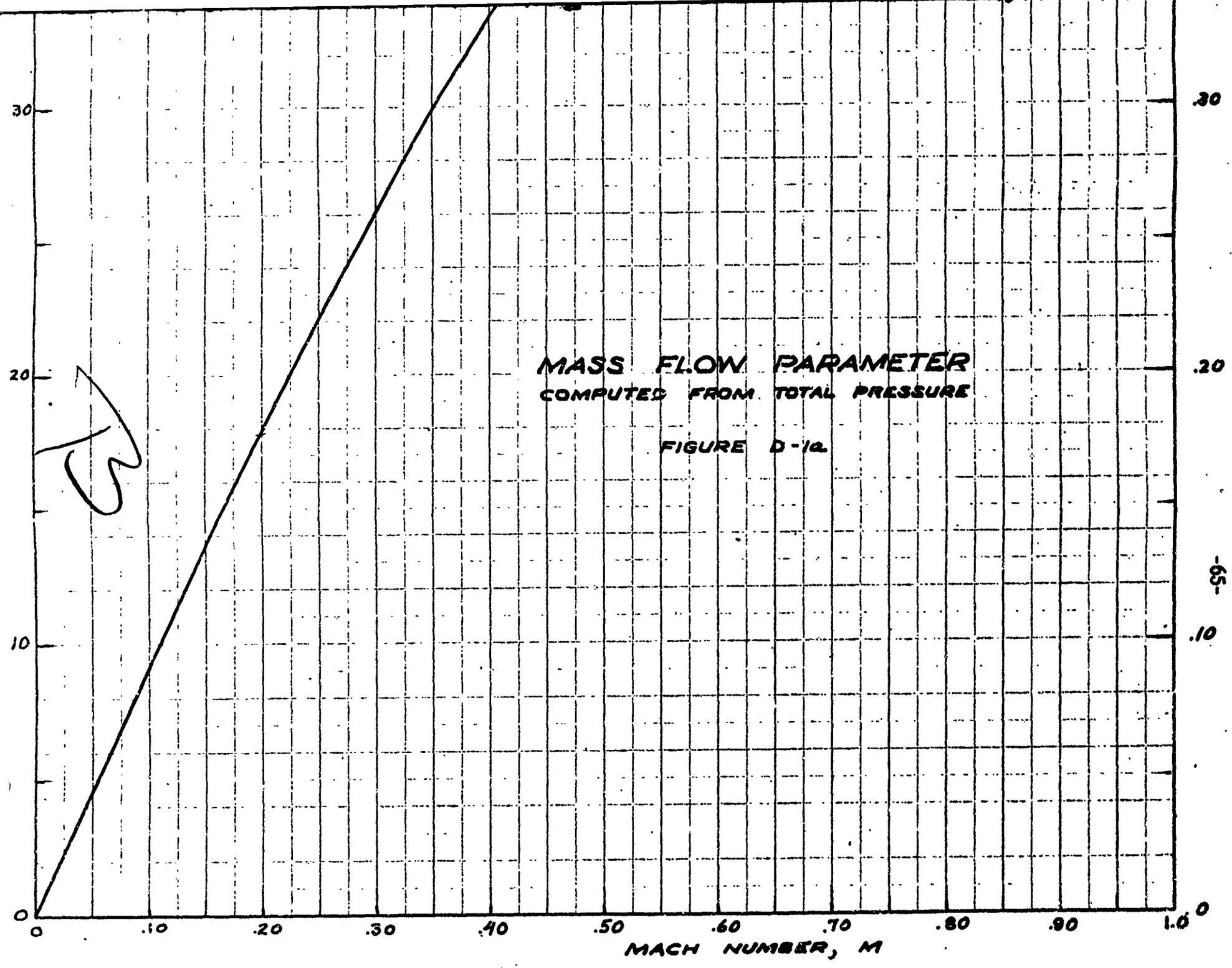

MASS FLOW PARAMETER
COMPUTED FROM TOTAL PRESSURE

FIGURE D-1a

ENGRAVING 334-3, 10 X 10 TO THE HALF INCH
WHEN ORDERING STATE COLOR, DRAWING OR TRACING PAPER
MADE IN U.S.A.
100% RAG PAPER

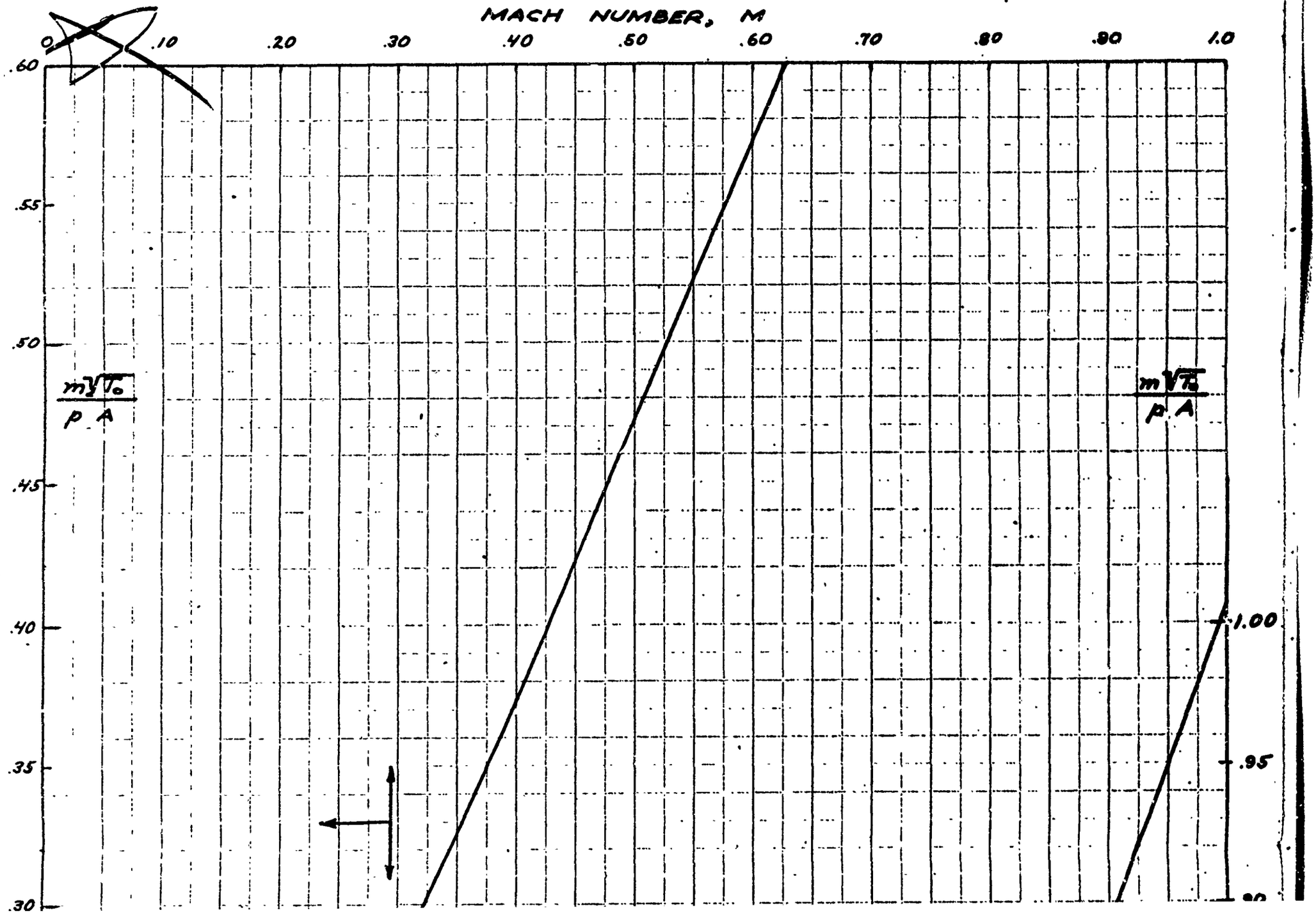

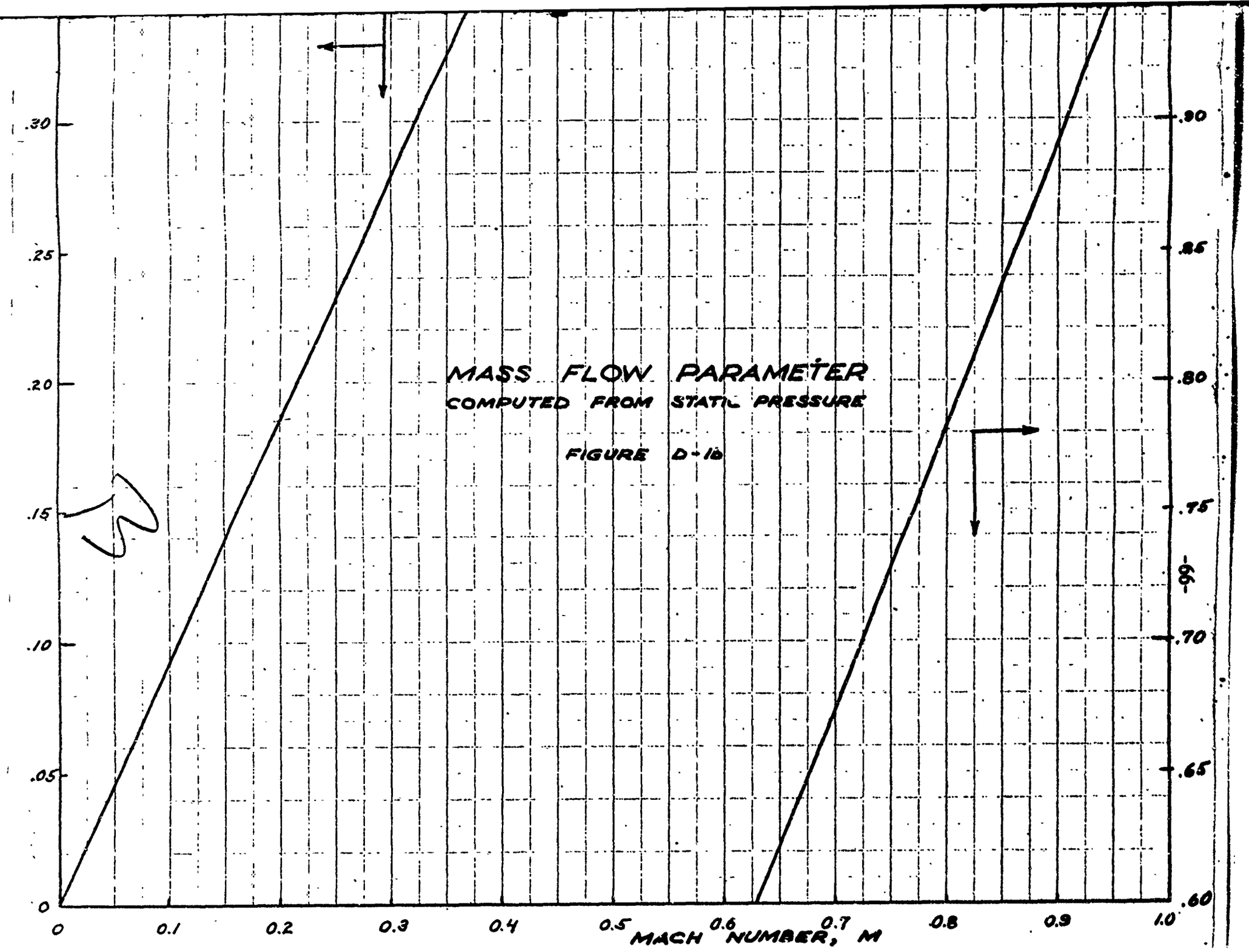

MASS FLOW PARAMETER
COMPUTED FROM STATIC PRESSURE

FIGURE D-16

REYNOLDS NUMBER, Re

FIGURE D-2

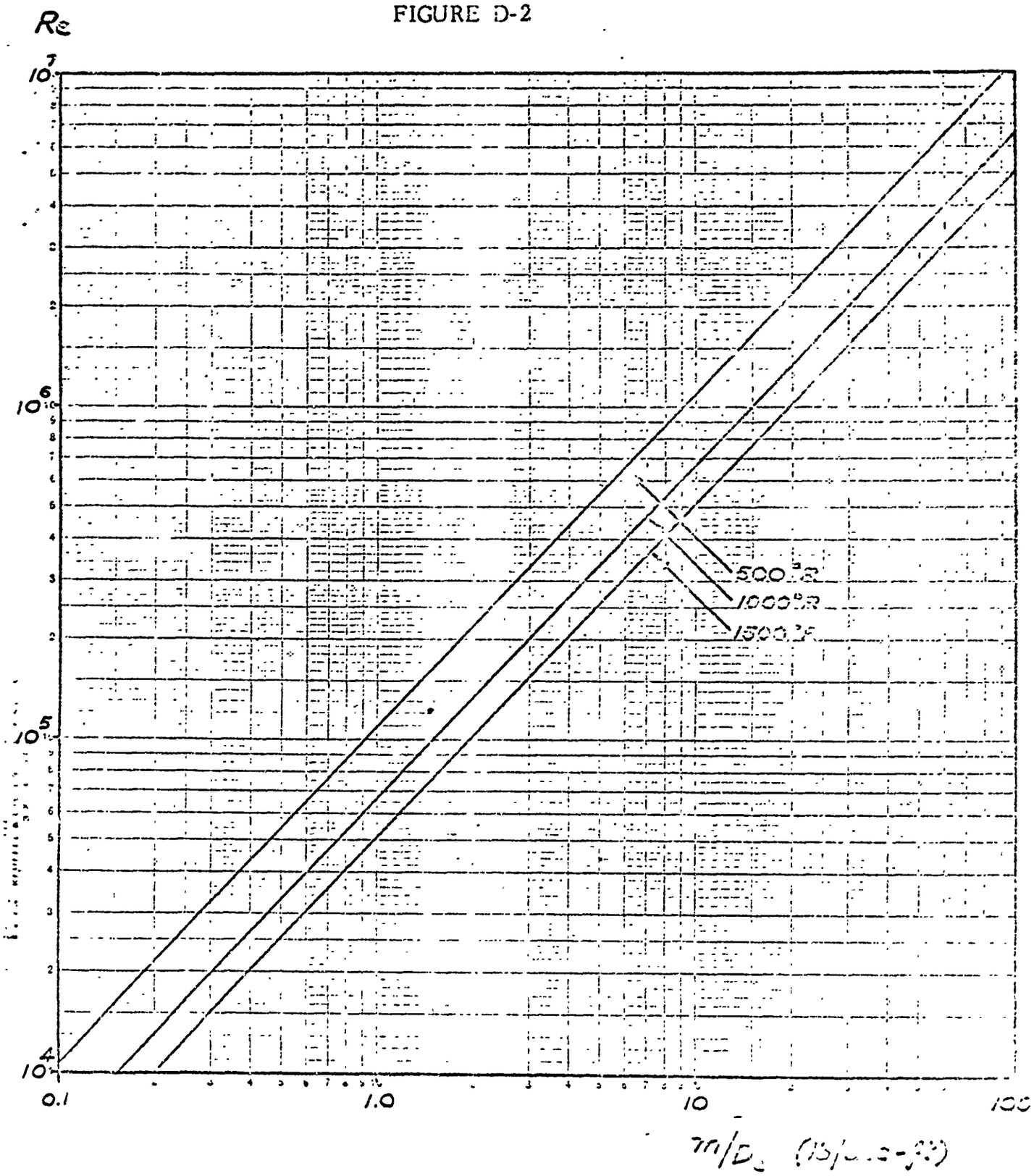

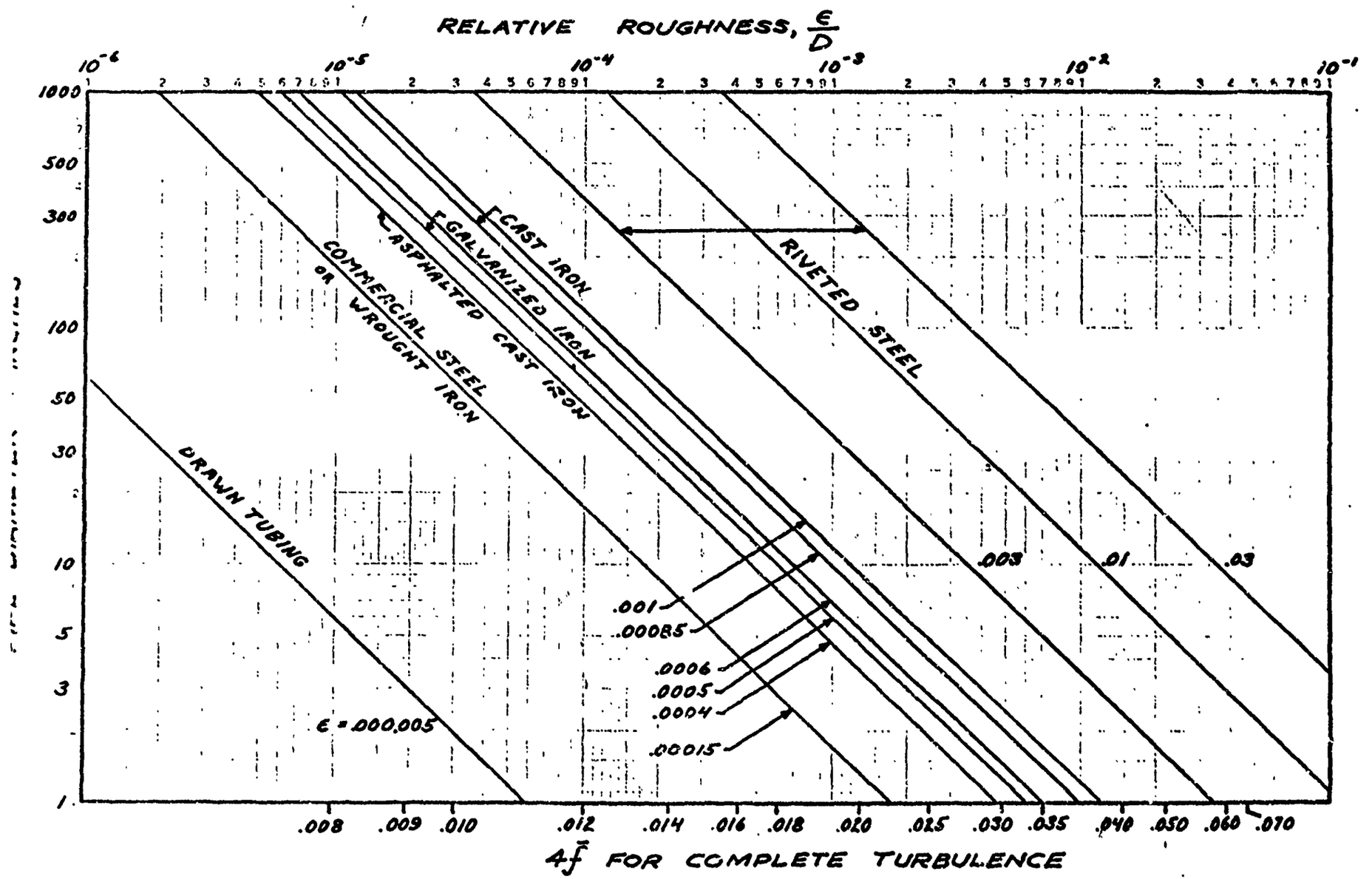
RELATIVE ROUGHNESS, ε/D
10^-6
10^-5
10^-4
10^-3
10^-2
10^-1
1000
500
300
100
50
30
10
5
3
1
CAST IRON
GALVANIZED IRON
ASPHALTED CAST IRON
COMMERCIAL STEEL OR WROUGHT IRON
RIVETED STEEL
DRAWN TUBING
ε = .000,005
.001
.00085
.0006
.0005
.0004
.00015
.003
.01
.03
.008
.009
.010
.012
.014
.016
.018
.020
.025
.030
.035
.040
.050
.060
.070
4f̄ FOR COMPLETE TURBULENCE

FIGURE D-3

FRICTION FACTOR FIGU

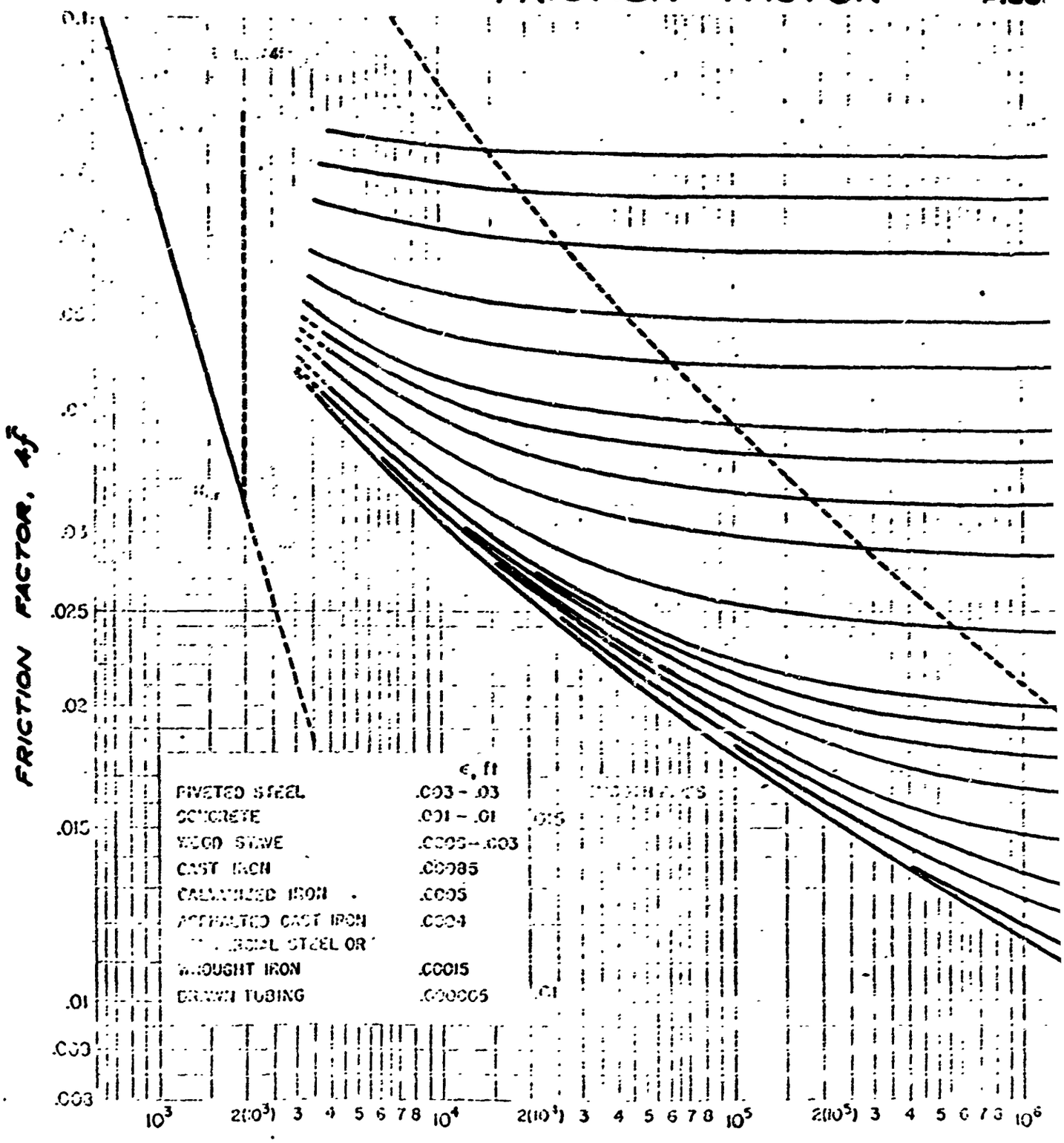

FIGURE D-4

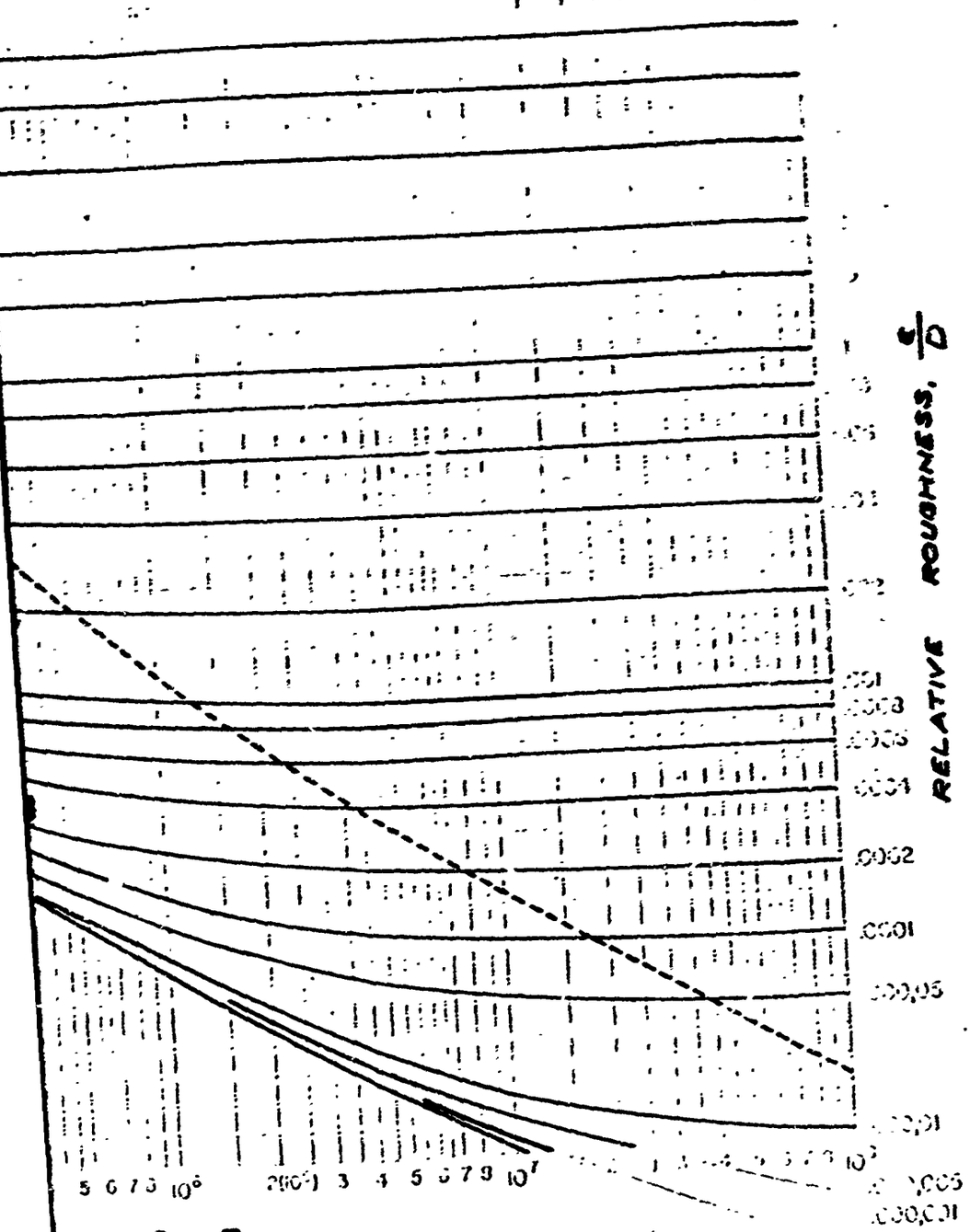
RELATIVE ROUGHNESS, $\frac{\epsilon}{D}$
.0002
.0001
.000,05
.000,01
.000,005
.000,001
5 6 7 8 10^6
2(10^6) 3 4 5 6 7 8 10^7
UMBER, Re

B

LAMINAR INLET LENGTH LOSS COEFFICIENT $4 f_1 \frac{x}{D}$

FIGURE D-5

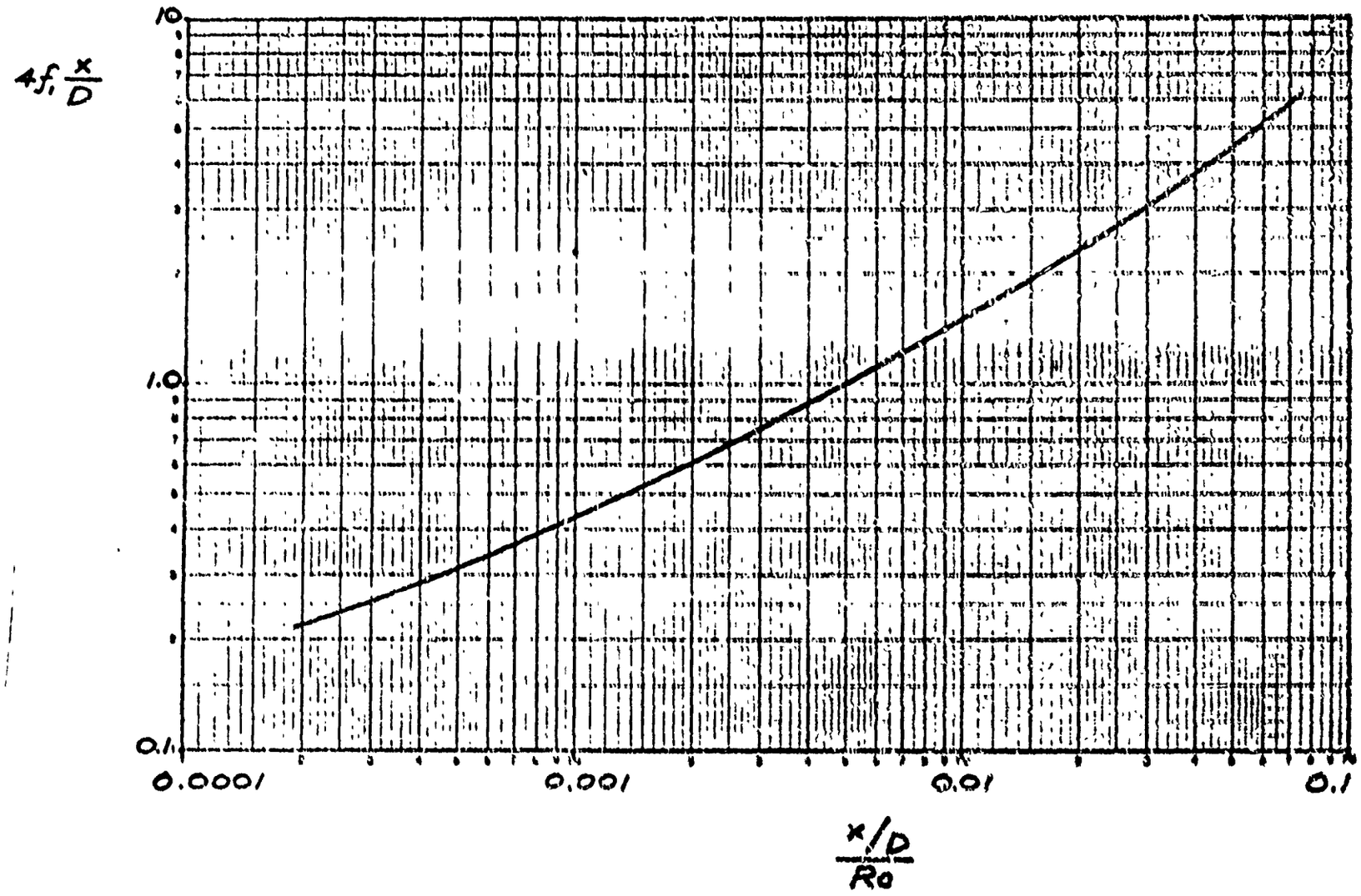

TURBULENT INLET LENGTH FRICTION FACTOR $\frac{1}{2}$

FIGURE D-6

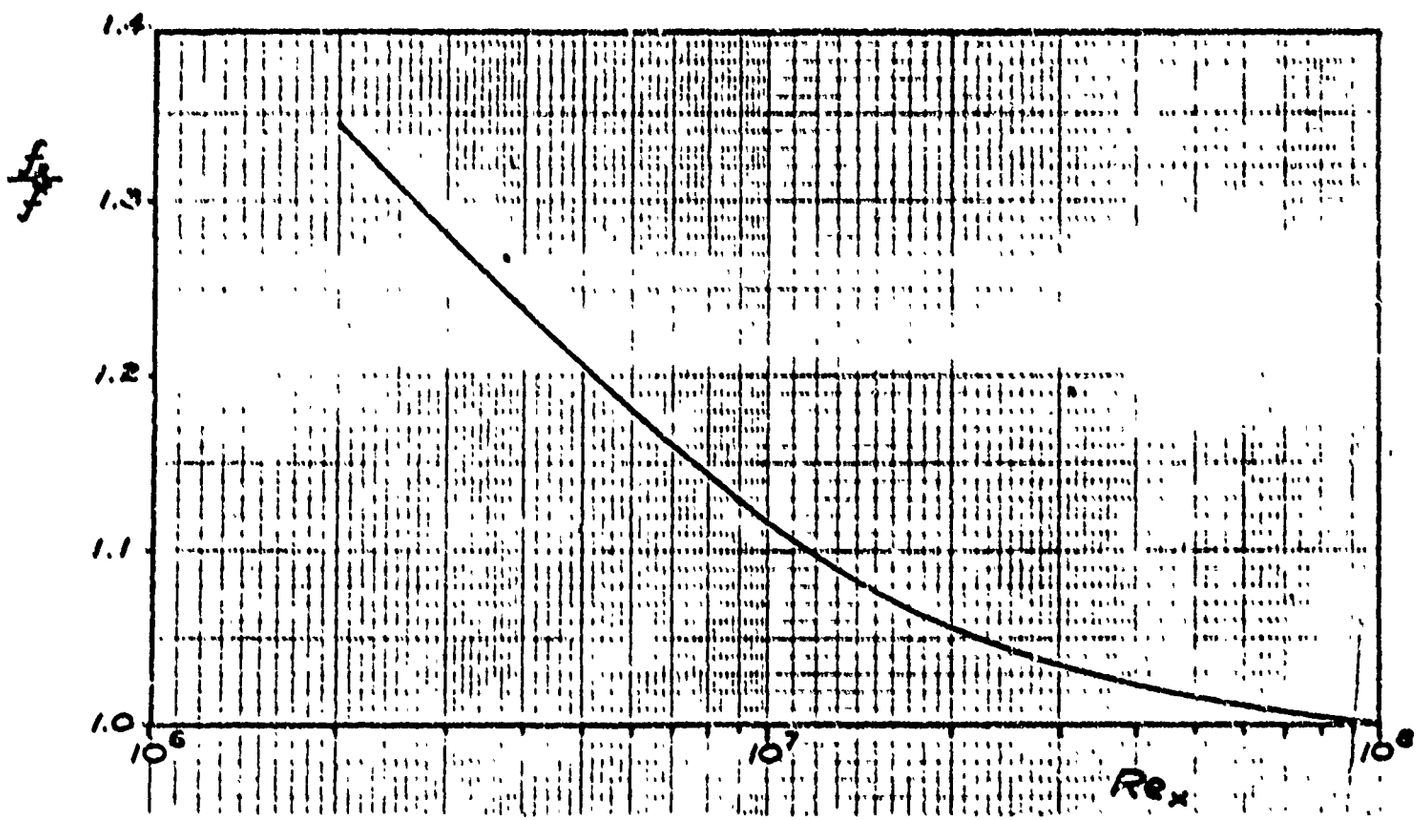

$4\bar{f}\frac{L_{MAX}}{D}$ AND $\frac{p_o}{p_o^*}$

FIGURE D-7

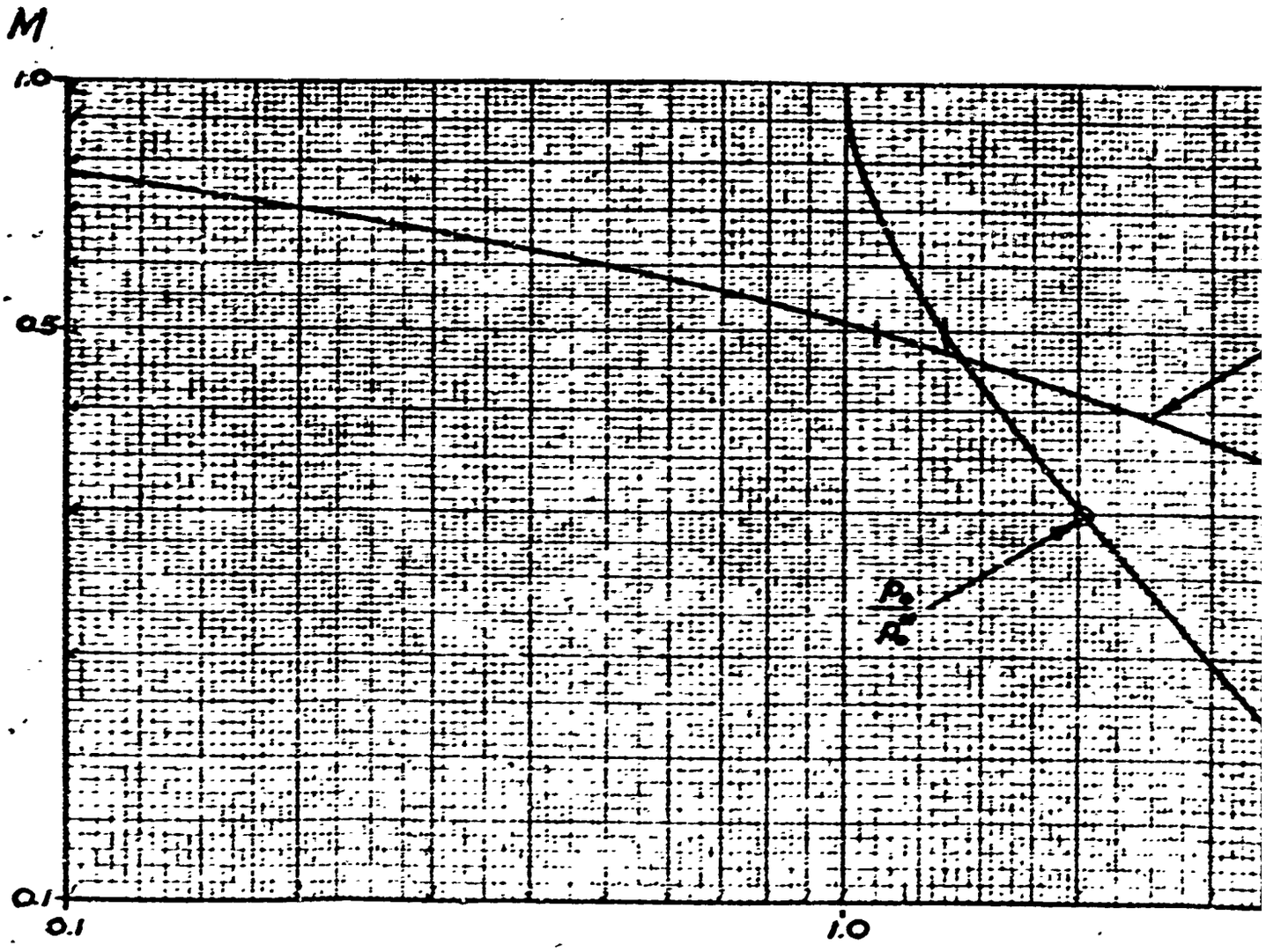

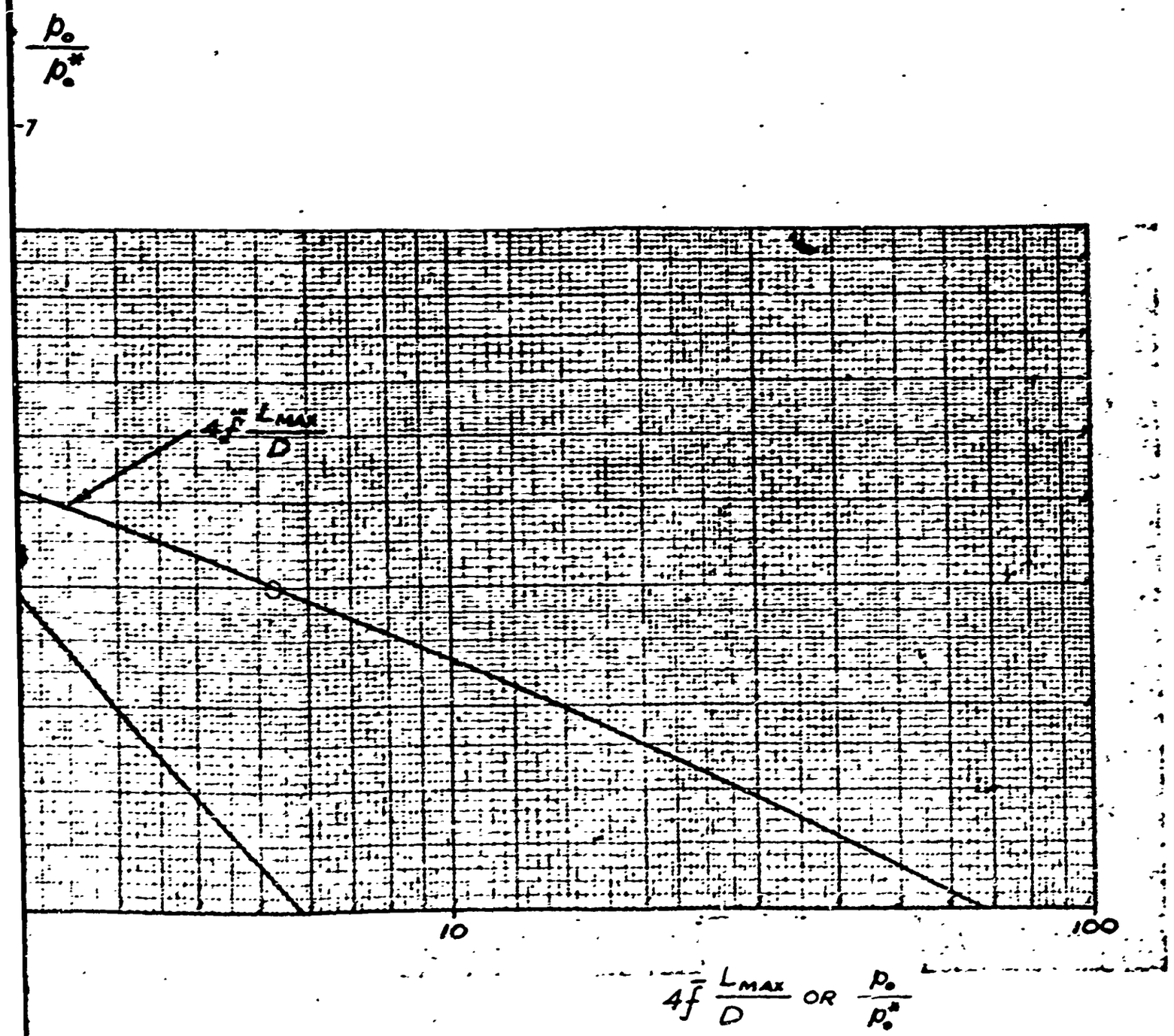
$\frac{p_o}{p_o^*}$
-7
$4\bar{f}\frac{L_{MAX}}{D}$
10
100
$4\bar{f}\frac{L_{MAX}}{D}$ OR $\frac{p_o}{p_o^*}$

B

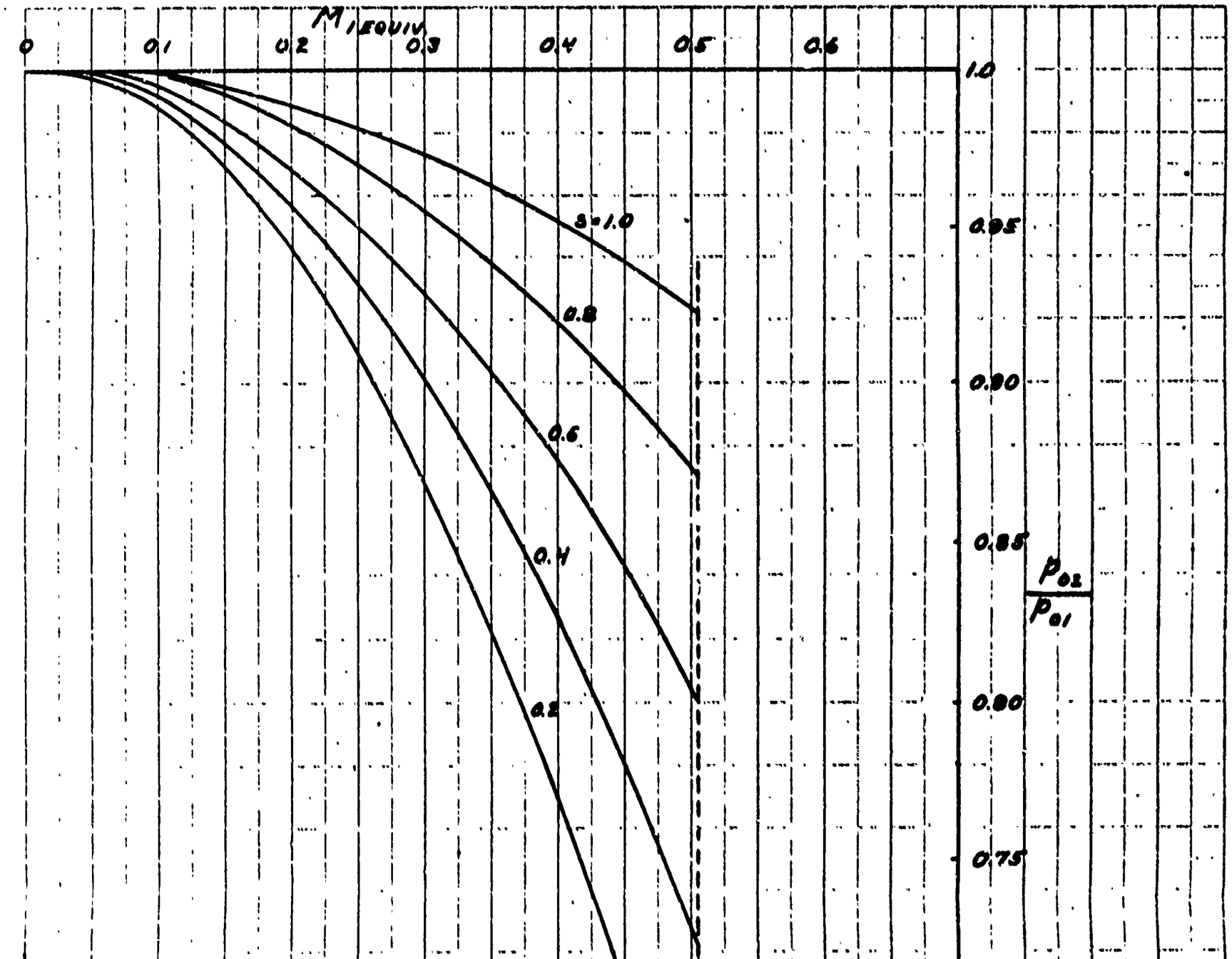
M_{1EQUIV}
0
0.1
0.2
0.3
0.4
0.5
0.6
1.0
0.95
0.90
0.85
0.80
0.75
$\frac{p_{02}}{p_{01}}$
S=1.0
0.8
0.6
0.4
0.2

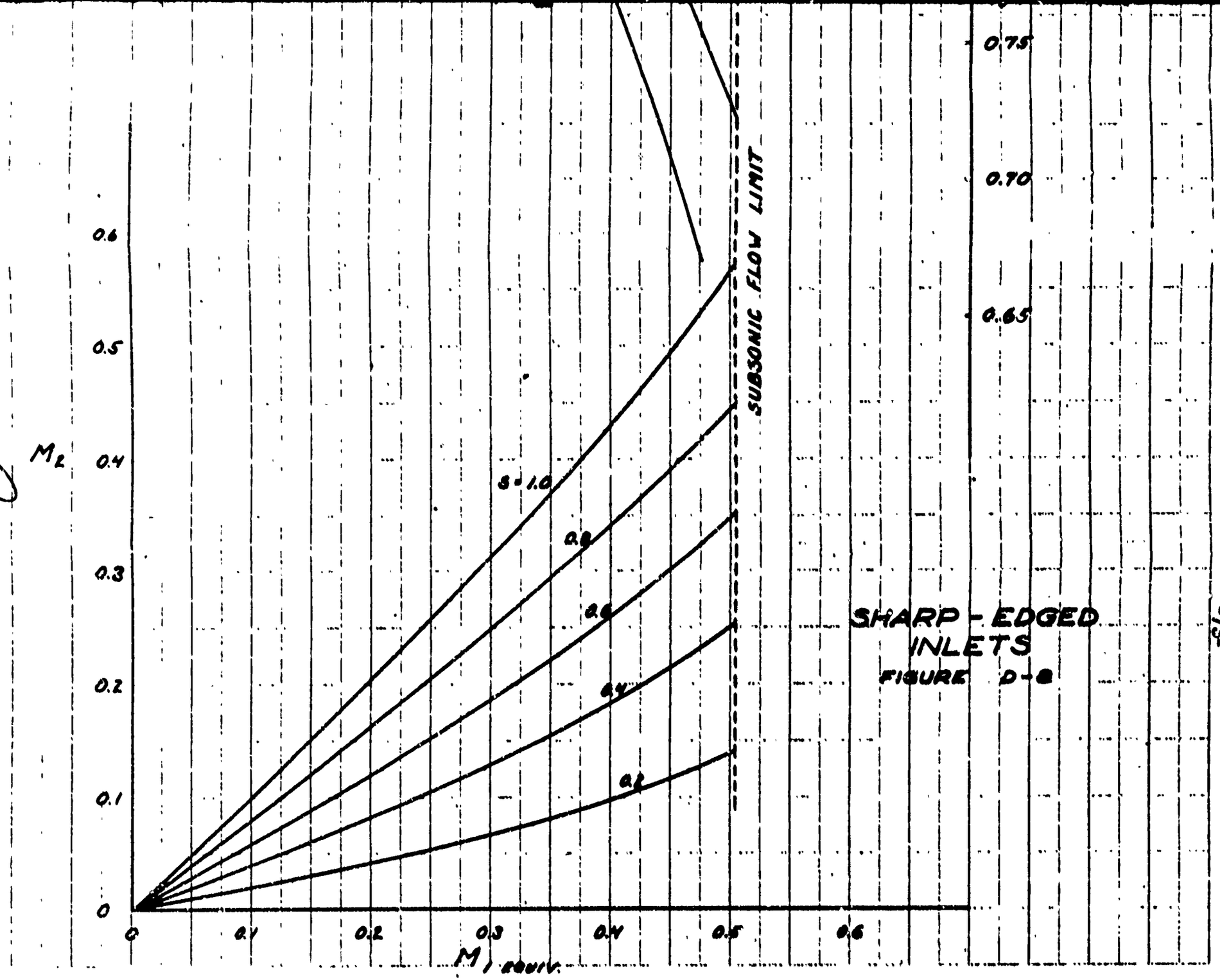

SHARP - EDGED INLETS
FIGURE D-8

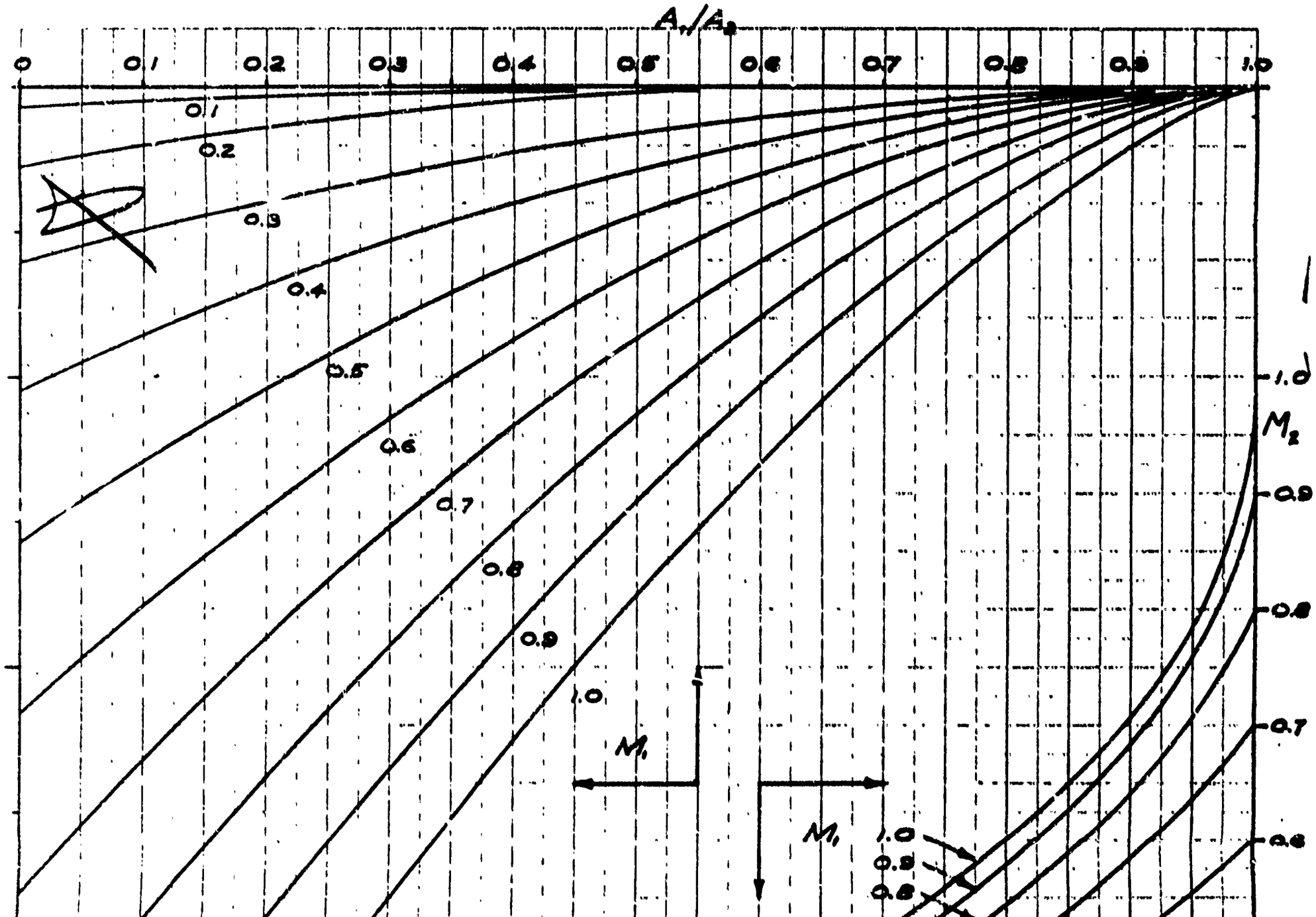

A_1/A_2
0
0.1
0.2
0.3
0.4
0.5
0.6
0.7
0.8
0.9
1.0
M_2
M_1

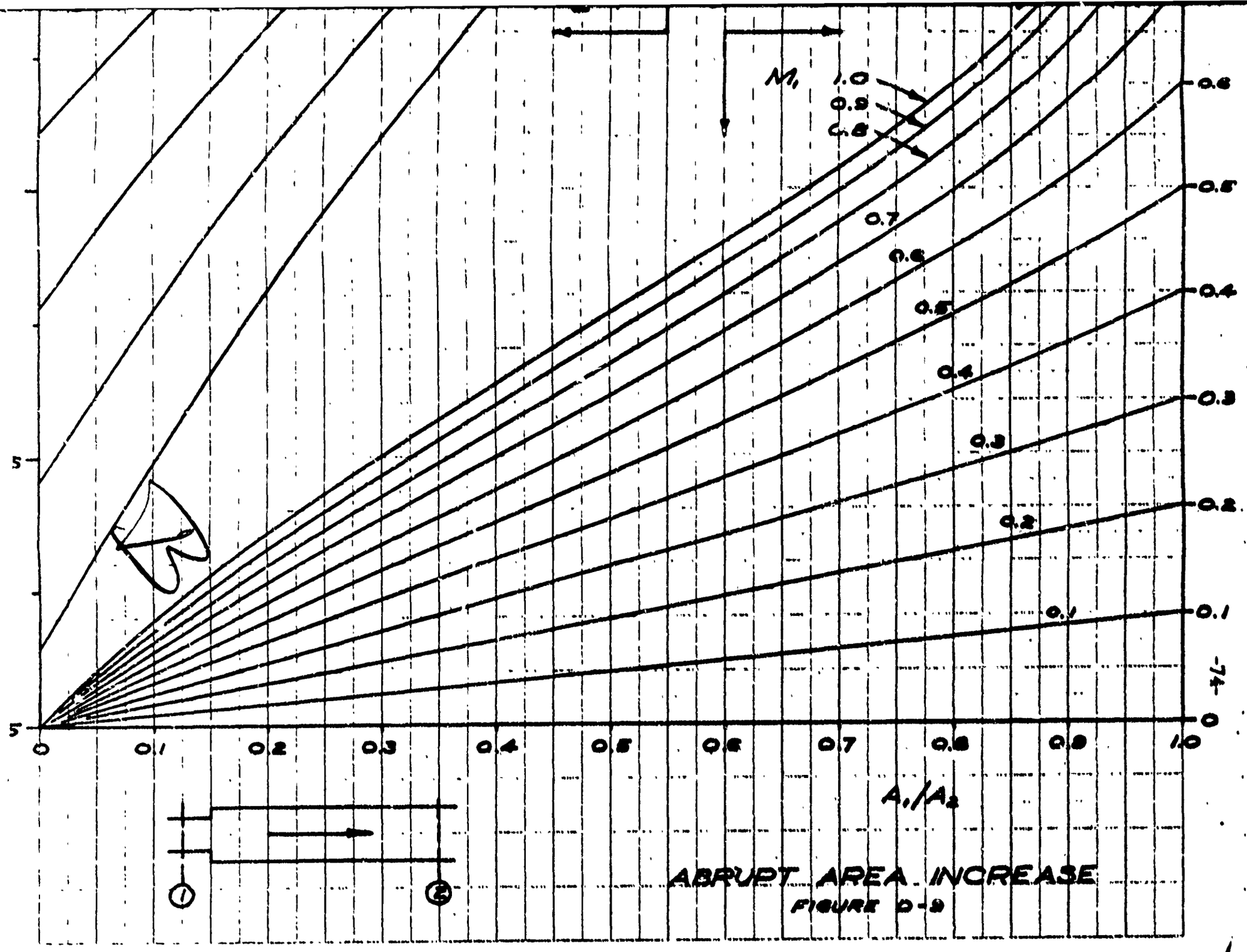

ABRUPT AREA INCREASE

FIGURE D-9

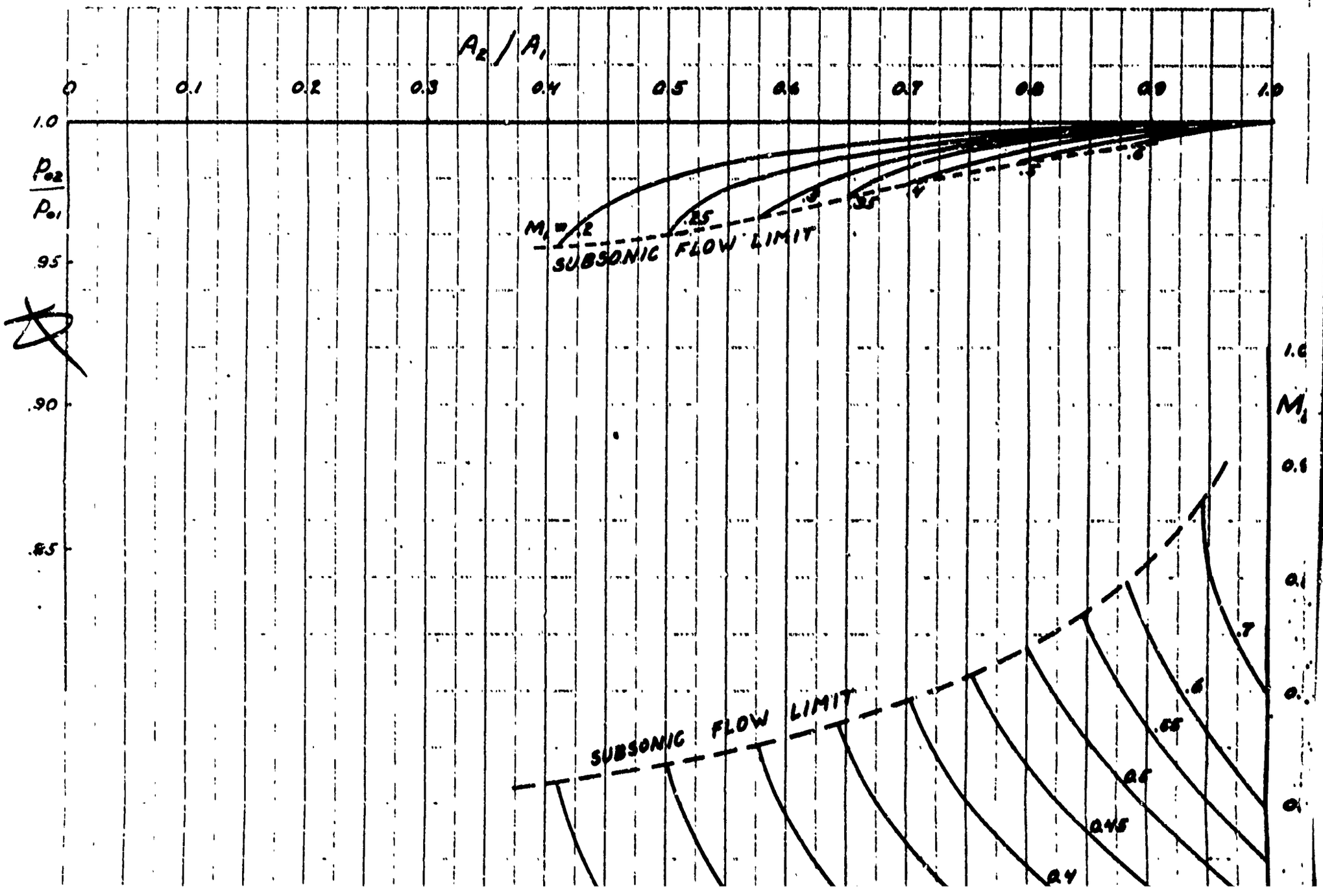

A_2 / A_1
0
0.1
0.2
0.3
0.4
0.5
0.6
0.7
0.8
0.9
1.0
1.0
$\frac{p_{o2}}{p_{o1}}$
.95
.90
.85
$M_1 = .2$
.25
.3
.35
.4
.5
.6
SUBSONIC FLOW LIMIT
SUBSONIC FLOW LIMIT
.7
.6
.55
.5
.45
.4

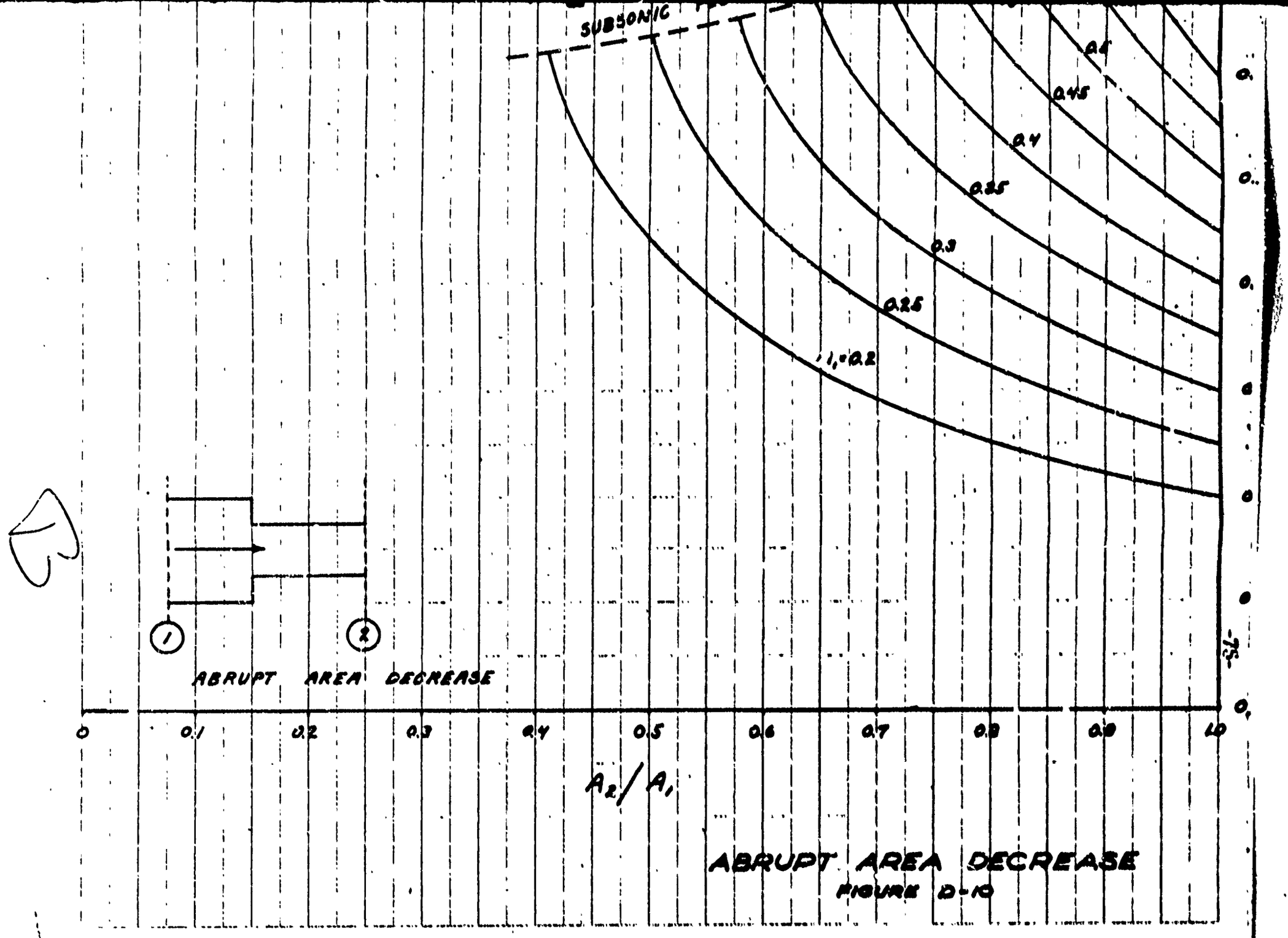

ABRUPT AREA DECREASE
FIGURE D-10

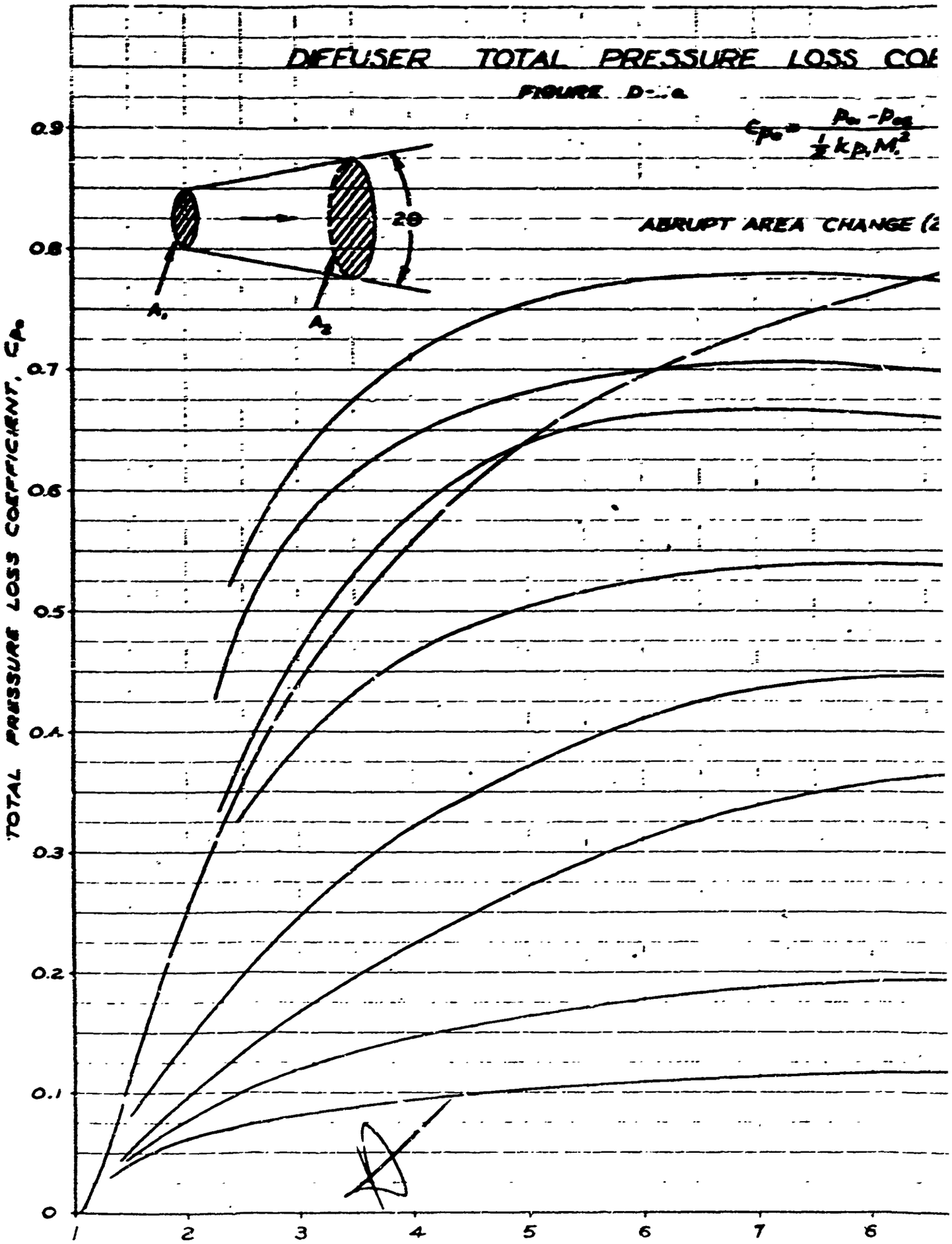
DIFFUSER TOTAL PRESSURE LOSS CO
FIGURE D-
$C_{p_0} = \frac{P_0 - P_{0a}}{\frac{1}{2} k p_1 M_1^2}$
ABRUPT AREA CHANGE (2
2θ
A_1
A_2
TOTAL PRESSURE LOSS COEFFICIENT, C_{p_0}
0.9
0.8
0.7
0.6
0.5
0.4
0.3
0.2
0.1
0
1
2
3
4
5
6
7
8

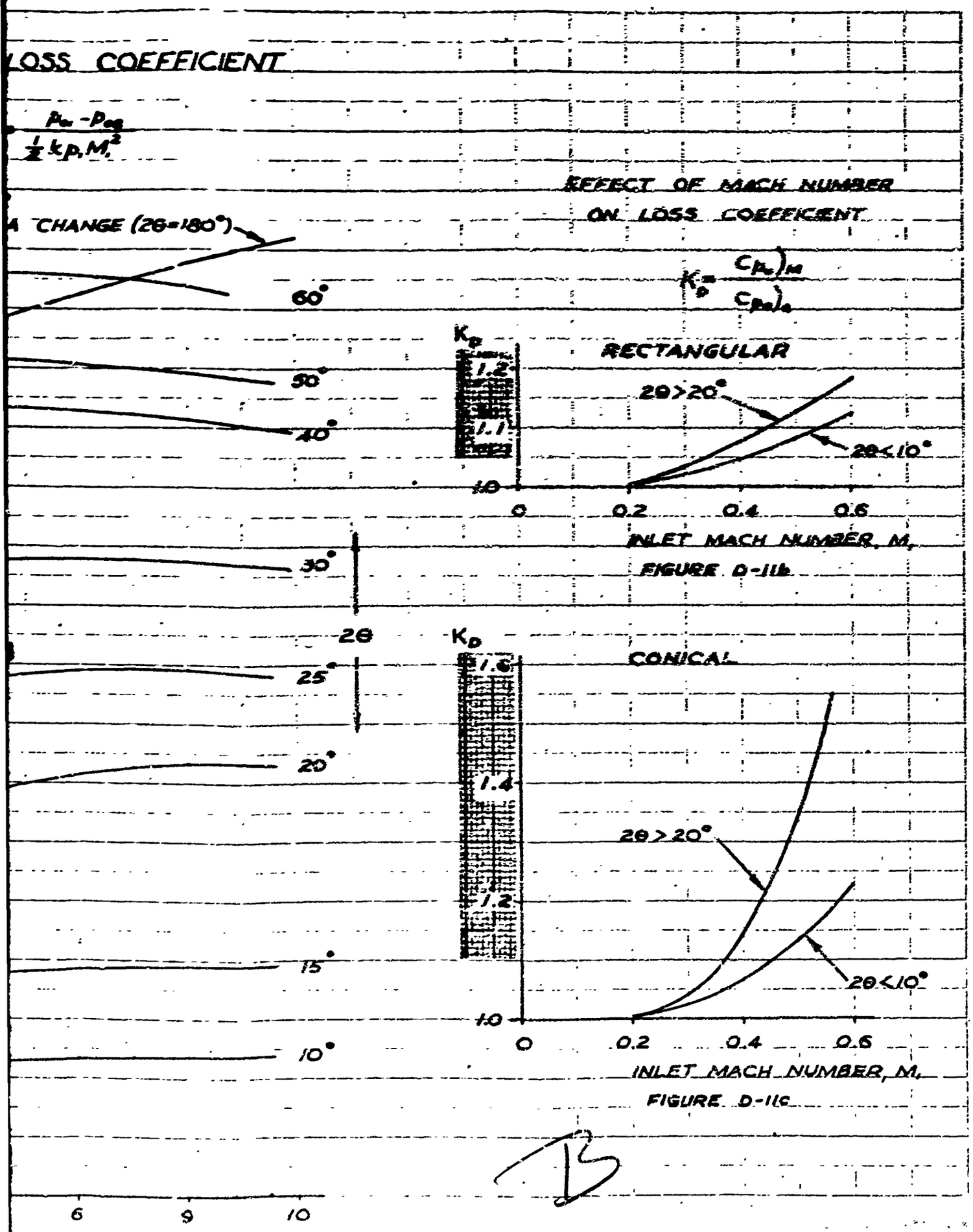
LOSS COEFFICIENT
$\frac{p_{01}-p_{02}}{\frac{1}{2}kp_1M_1^2}$
A CHANGE (2θ=180°)
60°
50°
40°
30°
2θ
25°
20°
15°
10°
6
9
10
EFFECT OF MACH NUMBER ON LOSS COEFFICIENT
$K_D = \frac{C_{p_0})_M}{C_{p_0})_0}$
K_D
1.2
1.1
1.0
RECTANGULAR
2θ>20°
2θ<10°
0
0.2
0.4
0.6
INLET MACH NUMBER, M,
FIGURE D-11b
K_D
1.6
1.4
1.2
1.0
CONICAL
2θ>20°
2θ<10°
0
0.2
0.4
0.6
INLET MACH NUMBER, M,
FIGURE D-11c

CIRCULAR CROSS-SECTION BENDS, LOSS COEFFICIENTS

FIGURE D-12

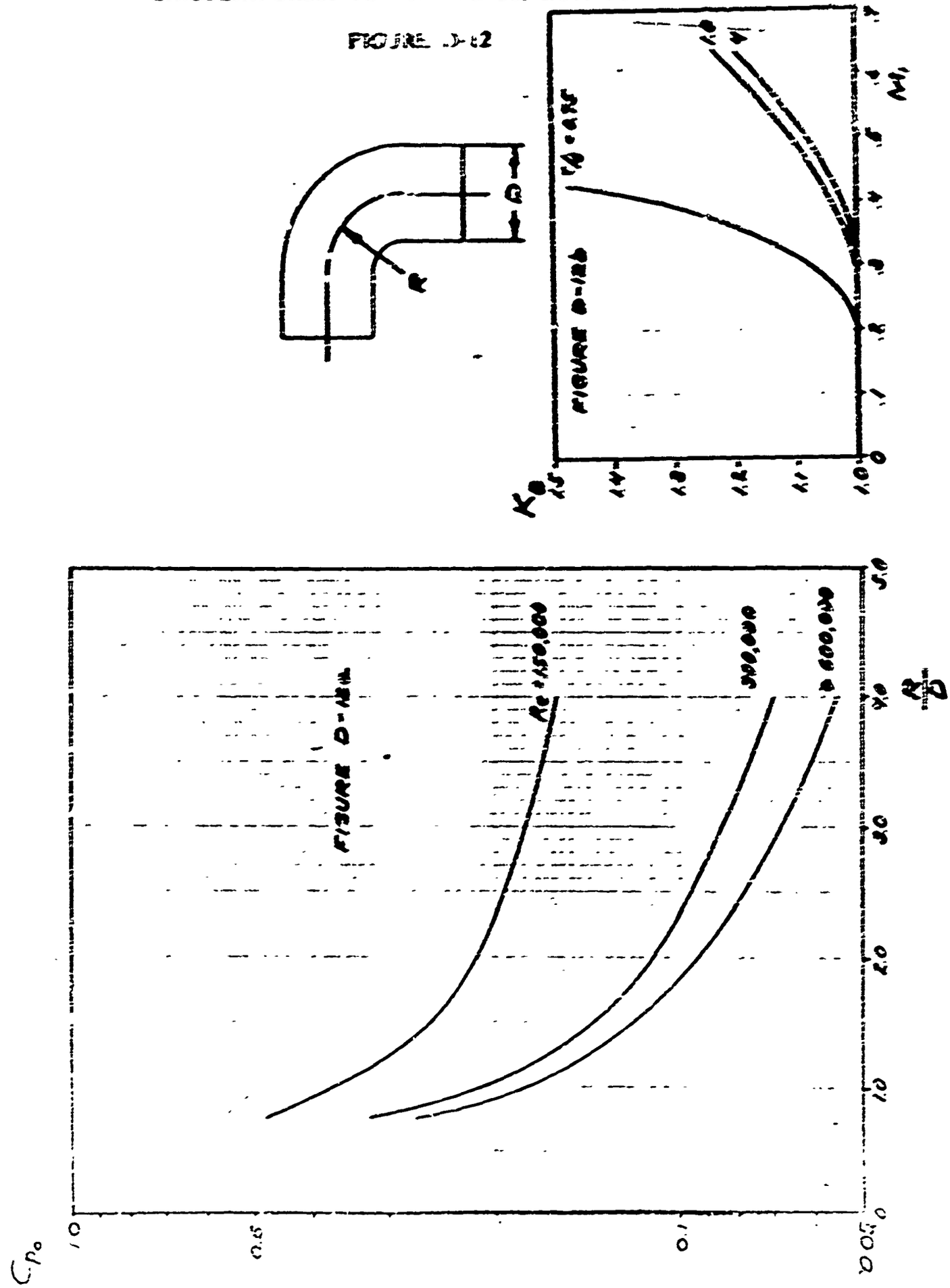

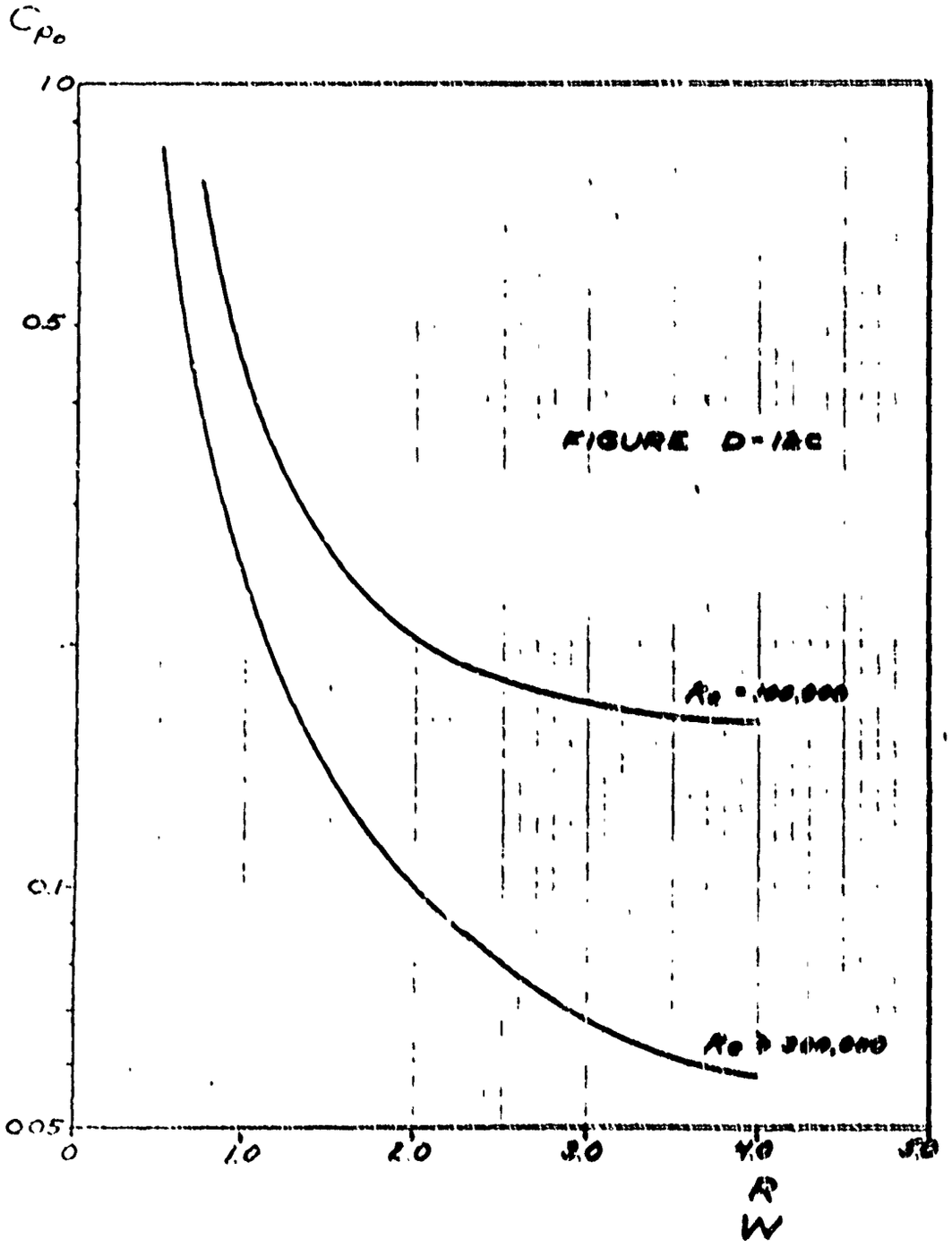

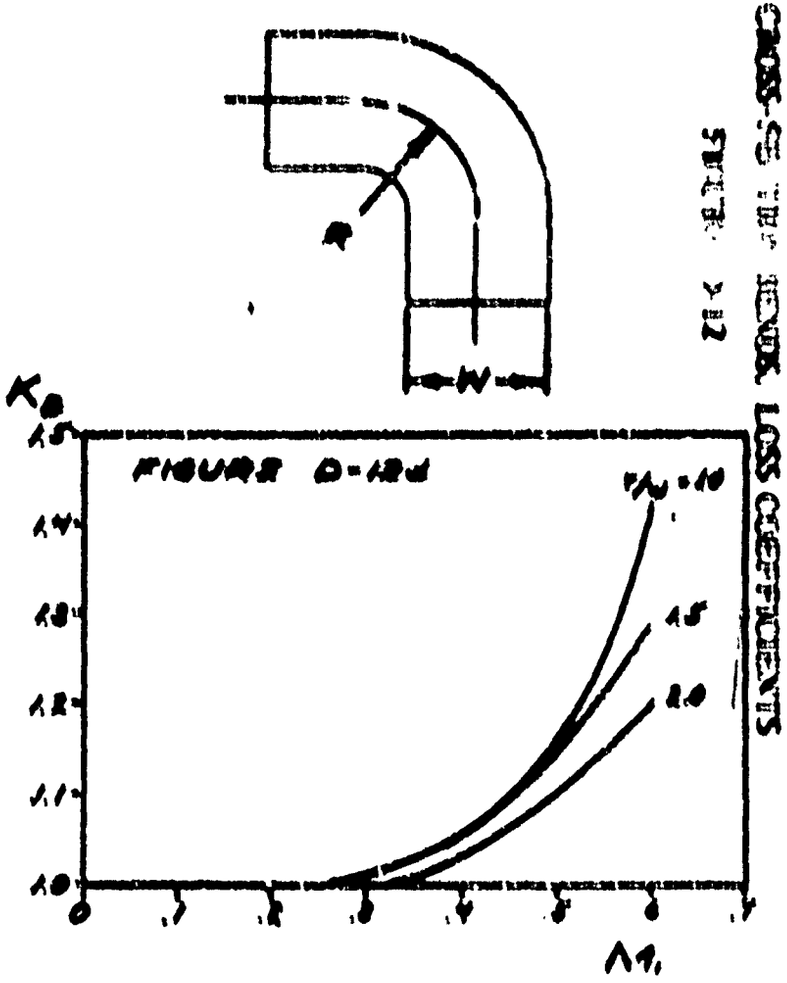

SQUARE CROSS-SECTION LOSS COEFFICIENTS

FIG. D-12

NOT REPRODUCIBLE

ROUND WIRE SCREENS

FIGURE D-13

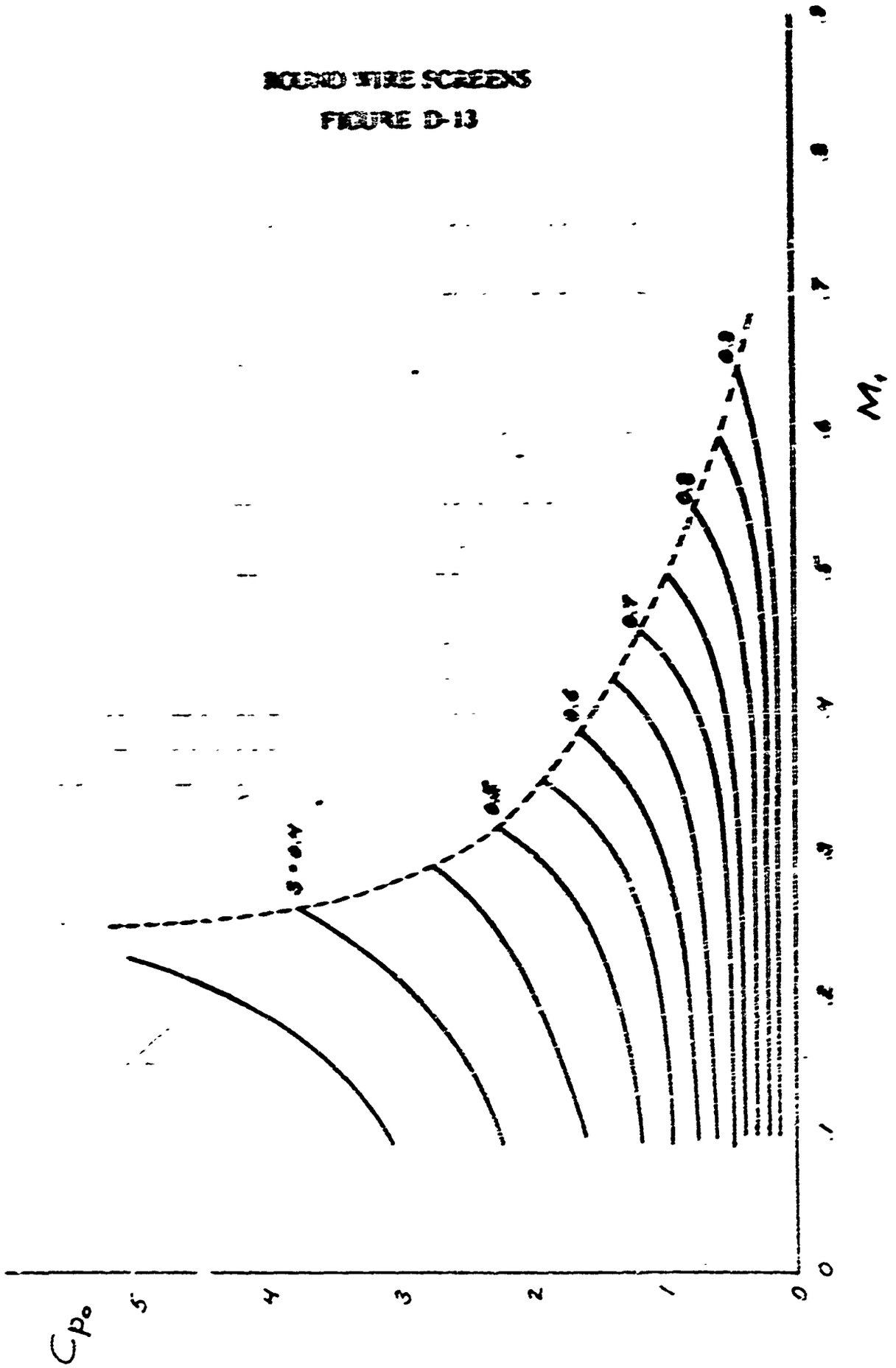

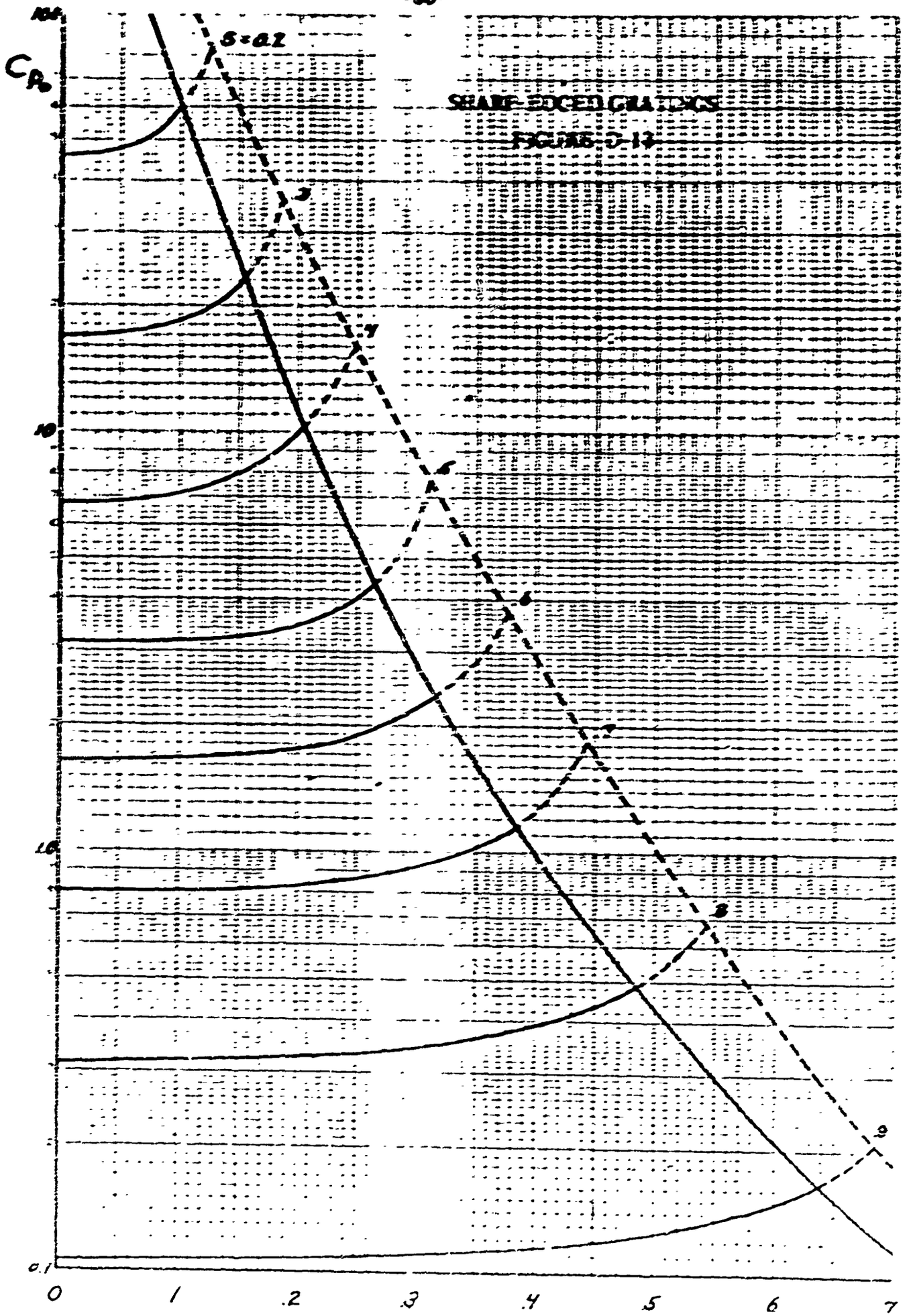

SHARP-EDGED GUTTERS

FIGURE 3-13

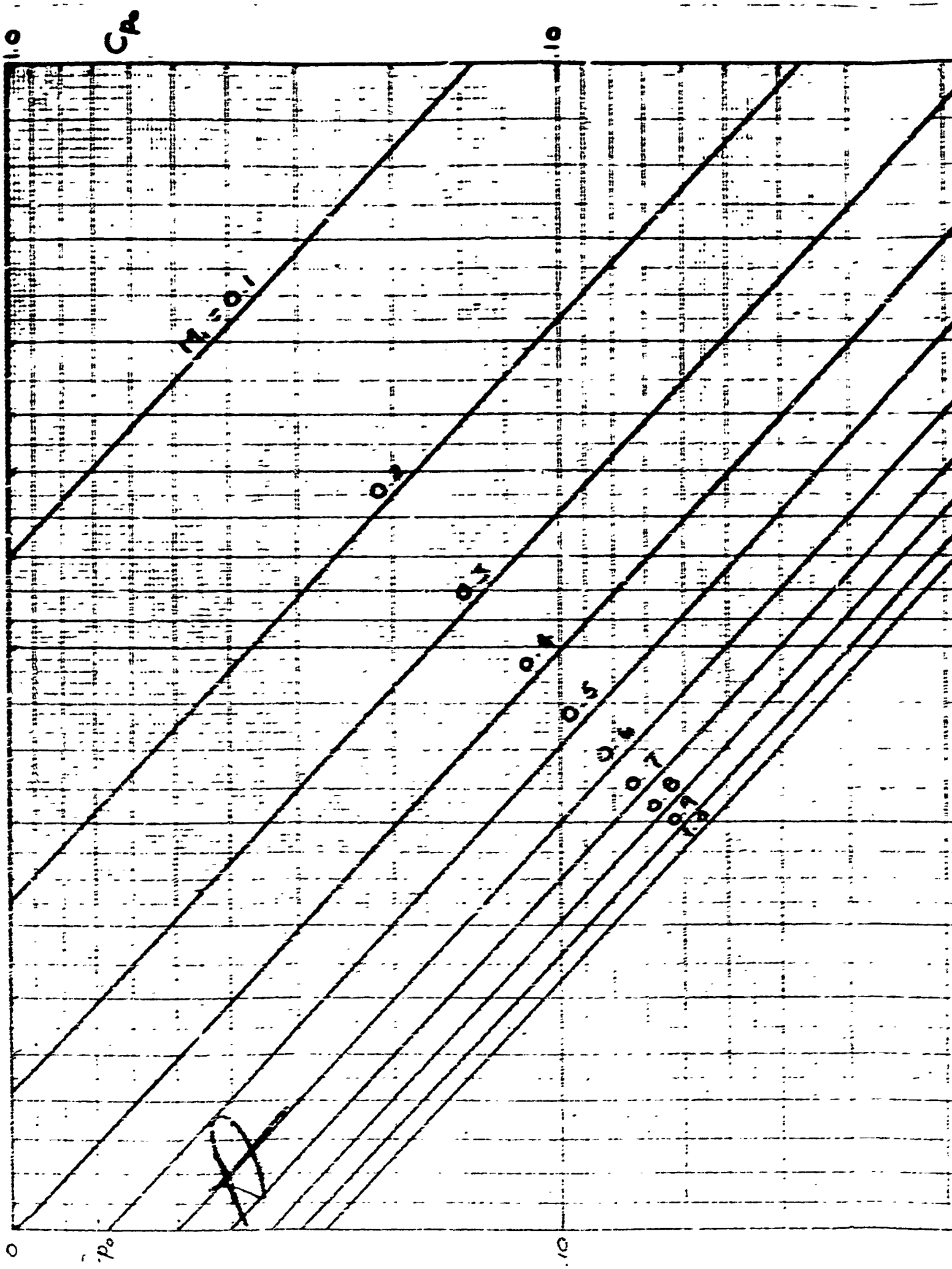

1.0
C_{p_0}
.10
$M_1 = 0.1$
0.2
0.3
0.4
0.5
0.6
0.7
0.8
0.9
1.0
0
p_0
.10

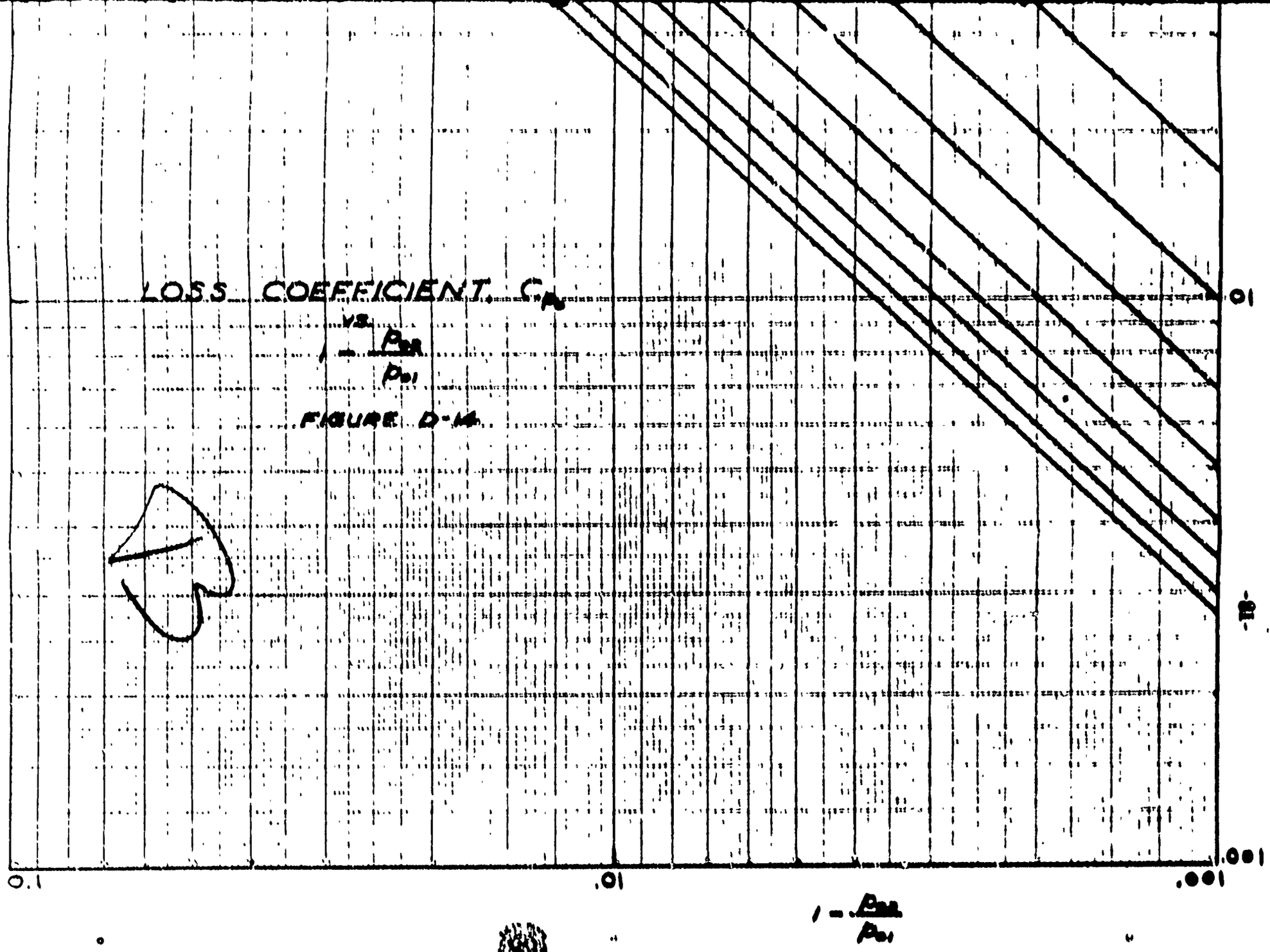
LOSS COEFFICIENT, C_{p_0}
vs.
$1 - \frac{p_{02}}{p_{01}}$
FIGURE D-14
.01
.001
0.1
.01
.001
$1 - \frac{p_{02}}{p_{01}}$

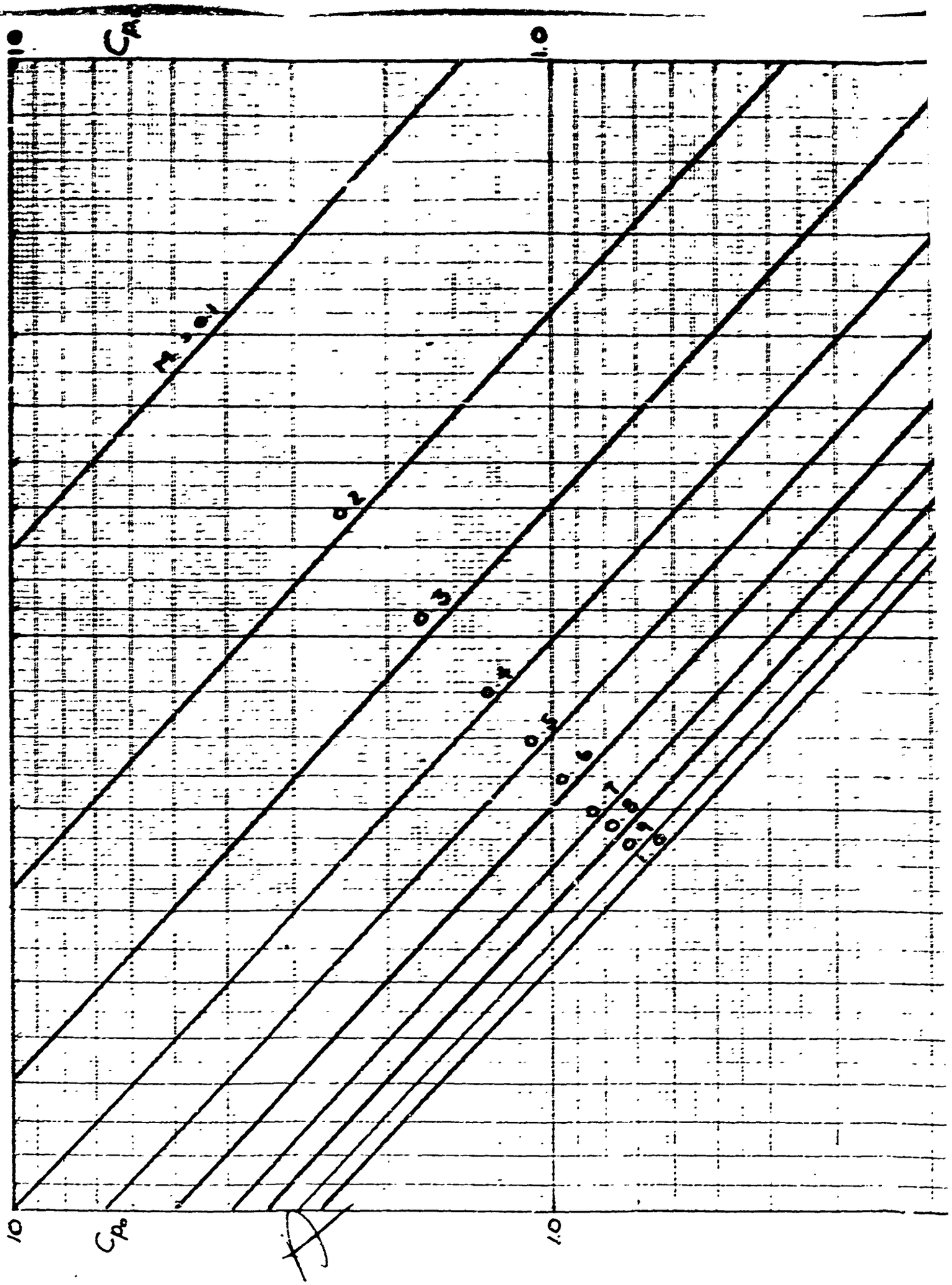

1.0
C_{p_0}
1.0
M = 0.1
0.2
0.3
0.4
0.5
0.6
0.7
0.8
0.9
1.0
1.0
C_{p_0}
1.0

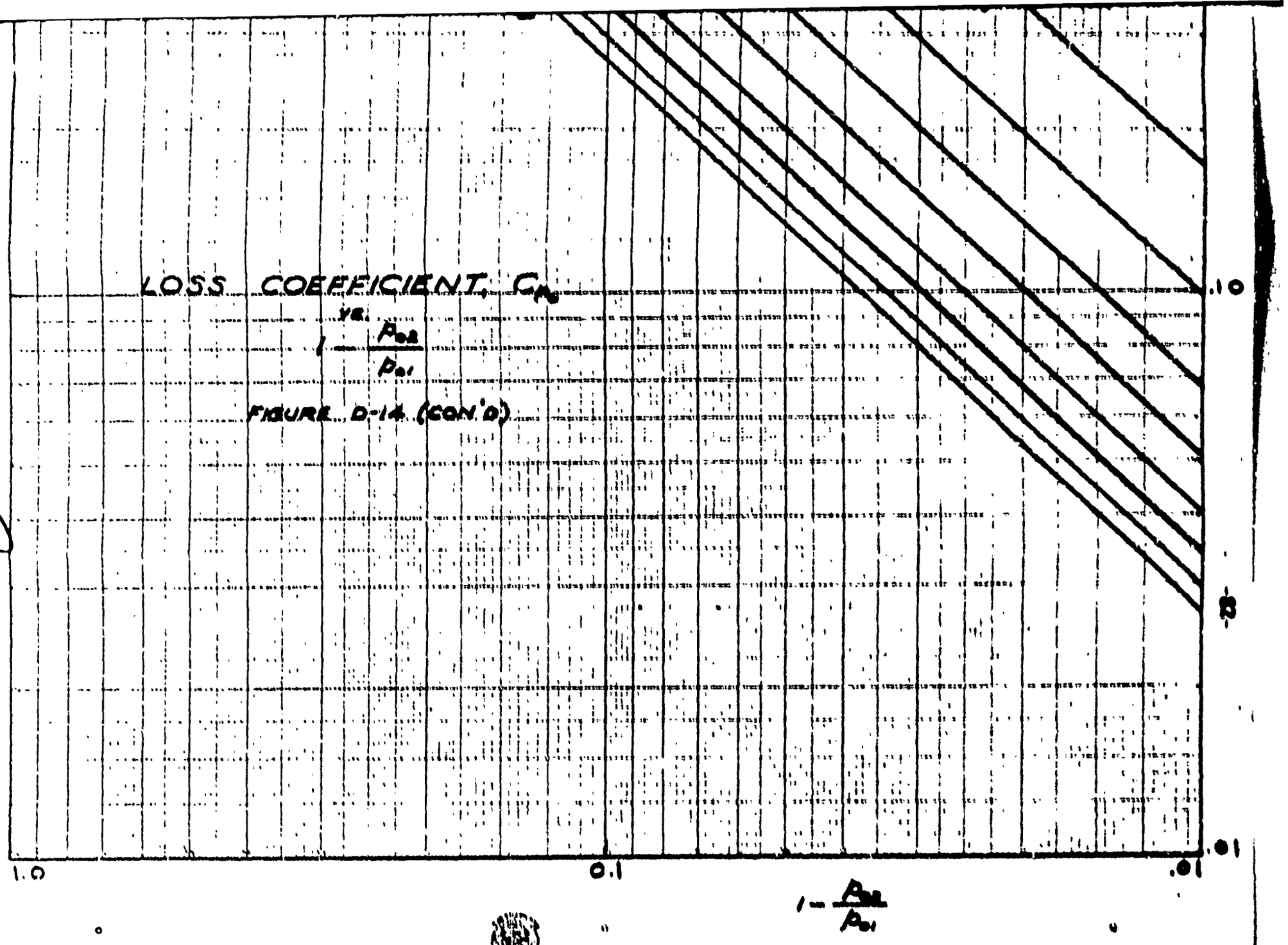

FIGURE D-14 (CON'D)

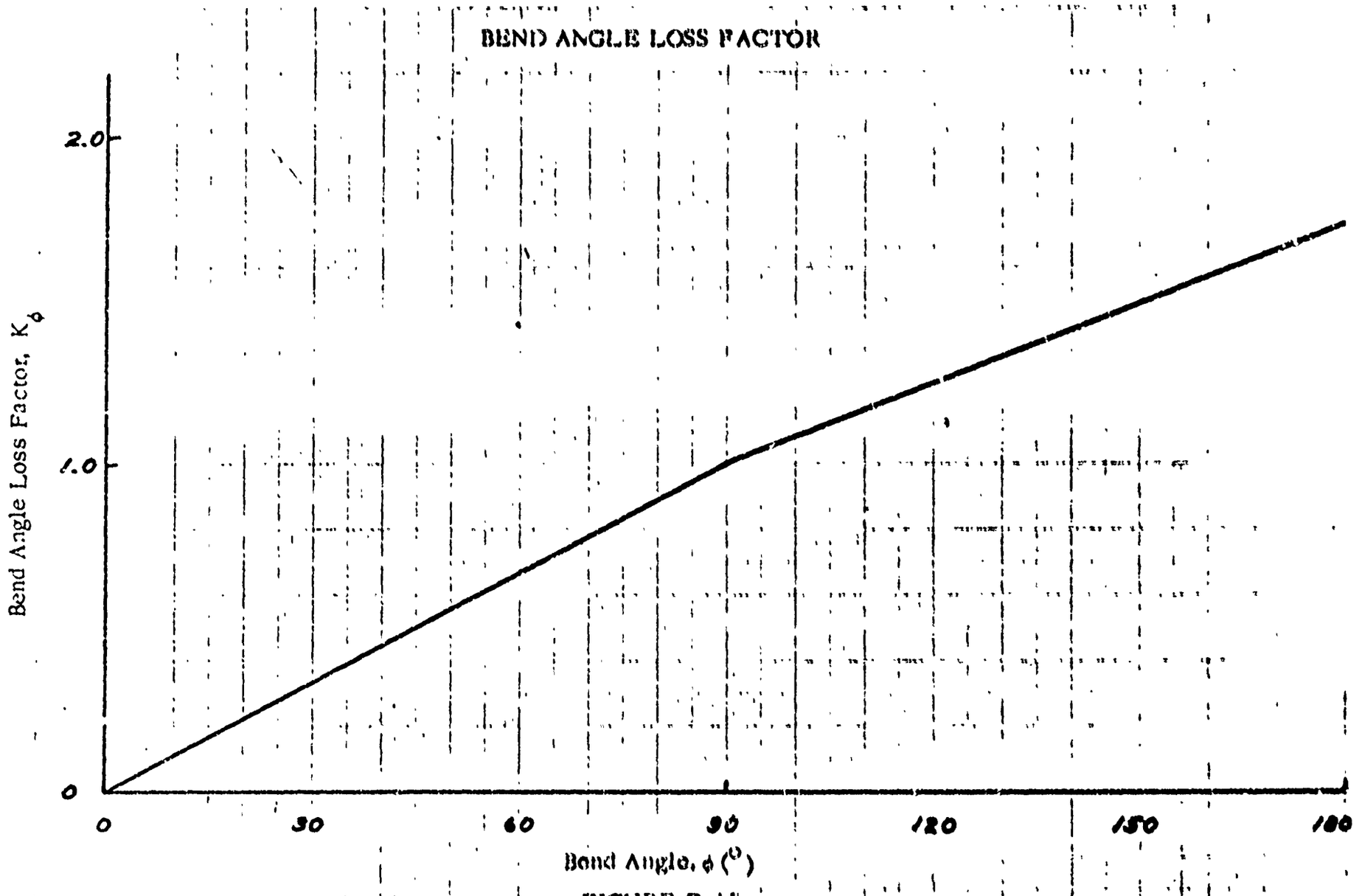
BEND ANGLE LOSS FACTOR
Bend Angle Loss Factor, K_ϕ
2.0
1.0
0
0
30
60
90
120
150
180
Bend Angle, ϕ (°)

FIGURE D-15

5.0 APPLICATION OF CALCULATION PROCEDURES TO A DUCT SYSTEM

The duct system shown in Figure 1 was chosen to illustrate the application of the calculation procedures and to provide an example comparison of pressure and power losses for different duct diameters. The results of the calculations for three different duct diameters of this duct system are tabulated in Table 5.1. The pressure losses and power losses are plotted in Figure 2. Note the severe increase in calculated losses as the duct diameter decreases.

The power loss penalty associated with the duct pressure losses has been calculated from a linearized analysis described in Section 5.2. The pressure losses are so large, however, that the linearized analysis should be regarded as giving only approximate estimates of the power penalties.

DUCT LAYOUT EXAMPLE
FIGURE 1

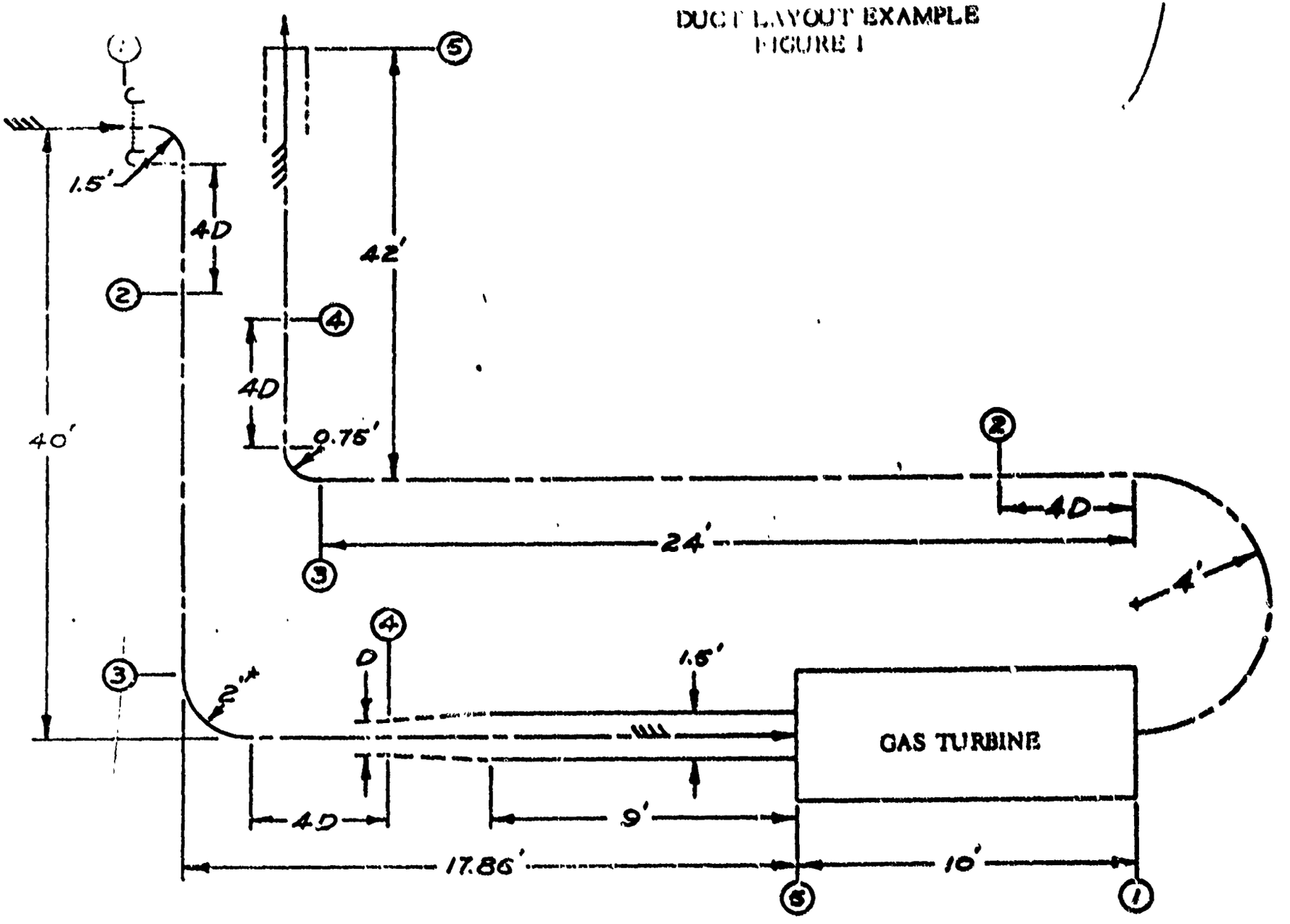

FIGURE 2

PRESSURE LOSS AND POWER LOSS FOR DUCT SYSTEM EXAMPLE

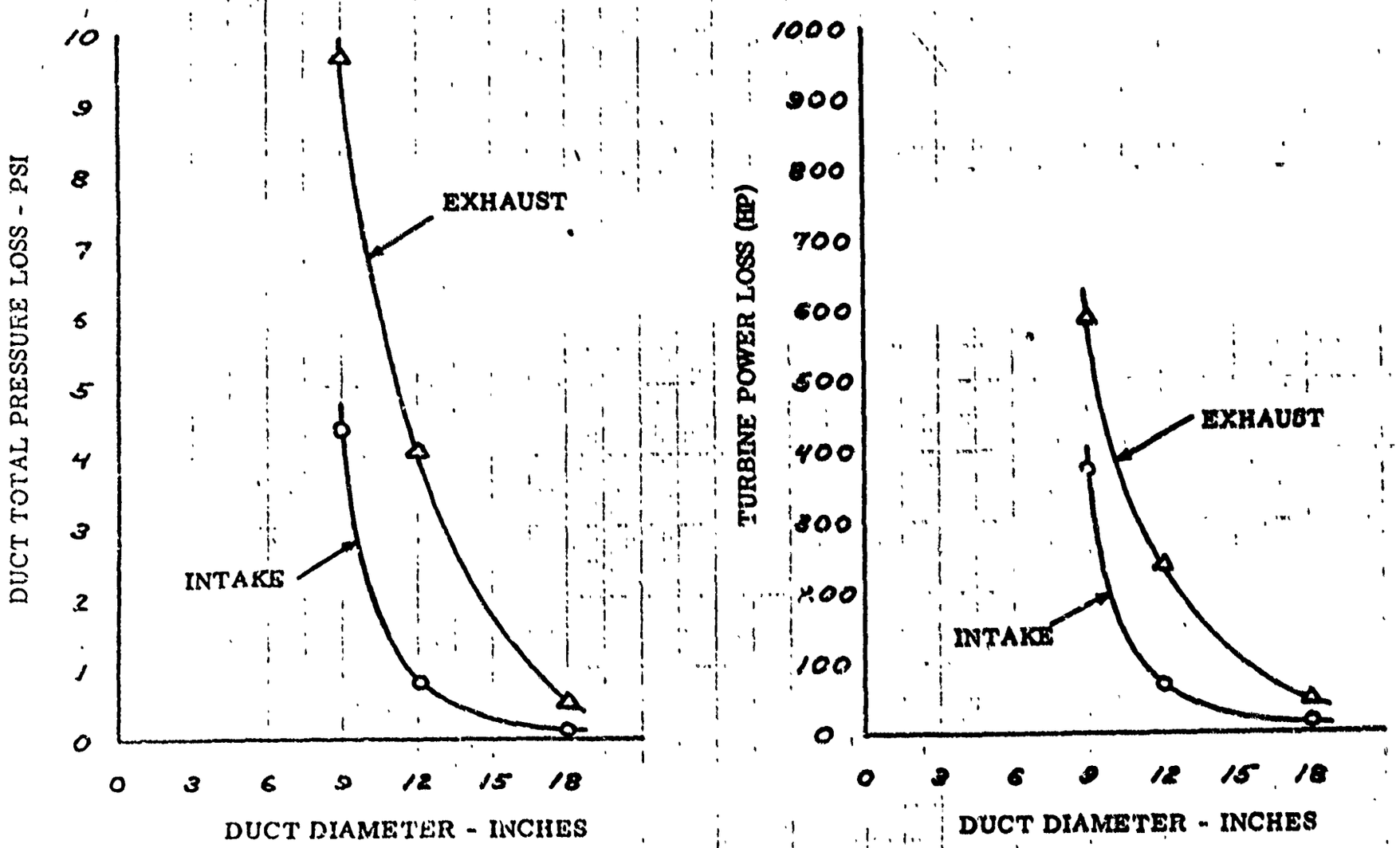

TABLE 5 1

CALCULATED PRESSURE AND POWER LOSSES
FOR VARIOUS DUCT DIAMETERS

INTAKE DUCT (with flow rate of 15 lb/sec)

Duct Diameter (in.)	18	12	9
Pressure Loss (psi)	0.1	0.77	1.56
Power Loss (HP)	8.5	65.5	141

EXHAUST DUCT (with flow rate of 16 lb/sec)

Duct Diameter (in.)	18	12	9
Pressure Loss (psi)	0.5	4.05	9.7
Power Loss (HP)	42.7	233	5.88

TABLE 5.1 (Cont'd)

PRESSURE RATIO AND ENTERING MACH NUMBER FOR EACH SYS

Components	18" DUCTS			12" DUCTS		
	Entering Mach Number	Total Pressure Ratio	Geometry	Entering Mach Number	Total Pressure Ratio	Geo
INTAKE						
Entrance	0.102	1.00		0.237	1.00	
Screen, S = 0.8		0.998			0.990	
Bend, 90°		0.998	R/D = 1.0		0.996	R/D
Straight duct	0.102	0.998	L/D = 20.4	0.240	0.990	L/D
Bend, 90°	0.102	0.999	R/D = 1.33	0.246	0.996	R/D
Diffuser				0.248	0.987	A_2 2θ
Straight duct	0.102	1.00	L/D = 7.9			
TOTAL INTAKE SYSTEM		0.993			0.947	
EXHAUST						
Exit	0.178			0.400		
Straight duct	0.177	0.991	L/D = 23.3	0.370	0.935	L/D
Bend, 90°	0.175	0.995	R/D = 0.75	0.360	0.974	R/D
Straight duct	0.174	0.997	L/D = 12	0.347	0.967	L/D
Bend, 180°	0.173	0.998	R/D = 2.66	0.345	0.993	R/D
TOTAL EXHAUST SYSTEM		0.980			0.875	

TABLE 5 : (Cont'd)

AND ENTERING MACH NUMBER FOR EACH SYSTEM COMPONENT

S	12" DUCTS			9" DUCTS		
Geometry	Entering Mach Number	Total Pressure Ratio	Geometry	Entering Mach Number	Total Pressure Ratio	Geometry
	0.237	1.00		0.460	0.993	
		0.989			0.949	
R/D = 1.0		0.996	R/D = 1.5		0.988	R/D = 2.0
L/D = 20.4	0.240	0.990	L/D = 32.5	0.500	0.820	L/D = 44.7
R/D = 1.33	0.246	0.996	R/D = 2.0	0.700	0.976	R/D = 2.67
	0.248	0.987	$A_2/A_1 = 2.25$ $2\theta = 10^\circ$	0.750	0.939	$A_2/A_1 = 4.0$ $2\theta = 11^\circ$
L/D = 7.9						
		0.947			0.700	
	0.400			0.658		
L/D = 23.3	0.370	0.935	L/D = 37.25	0.490	0.810	L/D = 51
R/D = 0.75	0.360	0.974	R/D = 0.75	0.470	0.975	R/D = 1.0
L/D = 12	0.347	0.967	L/D = 20	0.429	0.933	L/D = 28
R/D = 2.66	0.345	0.993	R/D = 4.0	0.425	0.991	R/D = 5.33
		0.875			0.728	

B

5.1 Sample Duct Pressure Loss Calculation

5.1.1 Intake Duct

Mass flow	m	= 15 lb/sec
Temperature	T_{o1}	= 540°R
Pressure	p_{o1}	= 14.7 psia
Duct diameter	D	= 9 in.
	A	= $\pi D^2/4 = 0.442$ ft^2

Mach Number : P-1a

$$\frac{m\sqrt{T_o}}{p_{o1}A} = \frac{15\sqrt{540}}{(14.7)(144)(.442)} = 0.37$$

$$M_1 = 0.460$$

Bellmouth Entrance ; P-3.1

$$4\bar{f}\,L_{max}/D\Big)_1 = 1.47$$

$$p_o/p_o^*\Big)_1 = 1.42$$

$$4\bar{f}\,L/D\Big)_{equiv} = 0.03$$

$$4\bar{f}\,L_{max}/D\Big)_2 = 1.47 - 0.03 = 1.44$$

$$M_2 = 0.465$$

$$p_o/p_o^*\Big)_2 = 1.41$$

$$p_{o2}/p_{o1}\Big)_{ent.} = 0.993$$

Screen, solidity, $s = 0.8$; P-9.1 (Note use of same entering Mach Number for close-coupled components)

$M_1 = 0.460$

$s = 0.8$ $\qquad Cp_c = 0.40$; $1 - (p_{o2}/p_{o1}) = .051$

$$\left.\frac{p_{o2}}{p_{o1}}\right)_{screen} = 0.949$$

Bend, 90°; P-7.1 (Note use of same entering Mach Number for close-coupled components)

$$\frac{m}{D} = \frac{15}{.75} = 20 \qquad Re = 2.1 \times 10^6$$

$T_c = 540$

$$Cp_o = 0.092$$

$$\frac{R}{D} = \frac{1.5}{.75} = 2.0 \qquad K_B = 1.07$$

$M_1 = 0.460$

$K_\phi = 1$

$K_\phi K_B Cp_o = 0.0985$

$$1 - \frac{p_{o2}}{p_{o1}} = 0.0125$$

$$\left.\frac{p_{o2}}{p_{o1}}\right)_{bend} = 0.9875$$

NOT REPRODUCIBLE

Mach Number (after close-coupled component) ; P-1a

$$\frac{p_{o2}}{p_{o1}}\Big|_{total} = (0.9875)(0.949)(0.993) = 0.931 = \frac{p_{o2}}{p_{o1}}$$

$$\frac{m\sqrt{T_o}}{p_{o1}A} \times \frac{p_{o1}}{p_{o2}} = \frac{m\sqrt{T_o}}{p_{o2}A} = \frac{0.373}{0.931} = 0.401$$

$M_2 = 0.507$

Straight Duct ; P-2.1

$D = 9$ in. $= 0.75$ ft

$L = 33.5$ ft $\quad L/D = 44.7$

$Re = 2.1 \times 10^6 \qquad 4\bar{f} = 0.0181$

$\epsilon/D = 0.0005/.75 = 0.00067$

$4\bar{f}\, L/D = 0.809$

$$M_2 = 0.507; \quad 4\bar{f}\left.\frac{L_{max}}{D}\right)_2 = 1.005; \quad \left.\frac{p_o}{p_o^*}\right)_2 = 1.33$$

$$4\bar{f}\left(\frac{L_{max}}{D}\right)_2 - \left(4\bar{f}\,\frac{L}{D}\right) = 4\bar{f}\left(\frac{L_{max}}{D}\right)_3 = 1.005 - 0.809 = 0.196$$

$$M_3 = 0.7 \qquad \left.\frac{p_o}{p_o^*}\right)_2 = 1.09$$

$$\frac{p_{o3}}{p_{o2}} = 0.820$$

Bend, 90° ; P-7.1

$$\frac{R}{D} = \frac{2.0}{0.75} = 2.67$$

$M_3 = 0.7$

$Re = 2.1 \times 10^6$

$Cp_o = 0.074$; $K_B = 1.29$ (Note: probably chokes) $K_\phi = 1.0$

$K_\phi K_B Cp_o = 0.0955$

$$1 - \frac{p_{o4}}{p_{o3}} = 0.0237$$

$$\frac{p_{o4}}{p_{o3}} = 0.976$$

$$\frac{m\sqrt{T_o}}{p_{o2}A} = 0.401 \quad \cdot \quad \frac{m\sqrt{T_o}}{p_{o4}A} = 0.501$$

$M_4 = 0.75$

Diffuser ; P-6.1

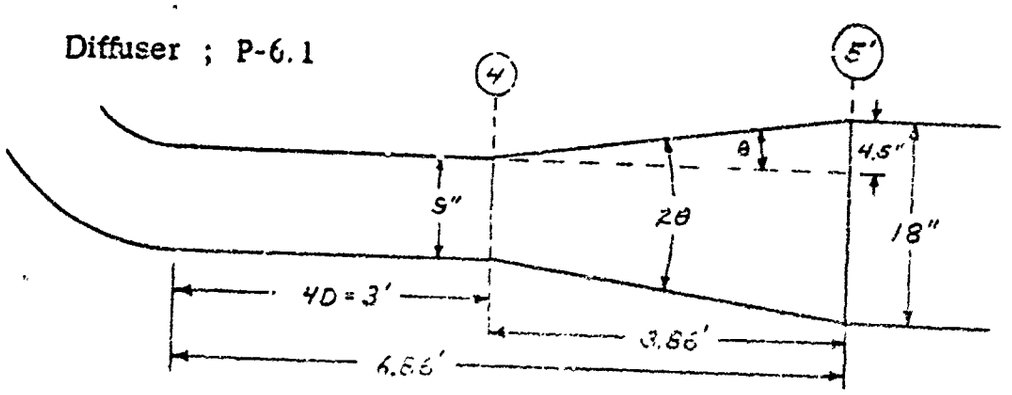

$$\tan\theta = \frac{4.5}{(3.86)(12)} = 0.0972, \quad \theta = 5.57^{o}, \quad 2\theta = 11.1^{o}$$

$$\frac{A_5}{A_4} = \frac{\pi D_5^2}{\pi D_4^2} = \frac{18^2}{9^2} = 4.0$$

$2\theta = 11.1^\circ$

$M_4 = 0.75$

$Cp_o = 0.112$

$K_D = 2.0$ (Note: no data - may choke) $\qquad K_D\, Cp_o = 0.224$

$$1 - \frac{p_{o5}}{p_{o4}} = 0.061$$

$$\frac{p_{o5}}{p_{o4}} = 0.939$$

$M_4 = 0.75$

$$\frac{m\sqrt{T_o}}{p_{o4} A_4} = 0.501$$

$$\frac{m\sqrt{T_o}}{p_{o4} A_4} \times \frac{p_{o4} A_4}{p_{o5} A_5} = \frac{0.501}{(0.939)(4.0)} = 0.1335$$

$M_5 = 0.121$

NOT REPRODUCIBLE

Pressure Ratio for Intake Duct

$$\frac{P_{o5}}{P_{o1}} = (0.931)(0.820)(0.976)(0.939) = 0.700$$

4.2 Exhaust Duct

$m = 16$ lb/sec

$T_o = 1500^oR$

$P_5 = 14.7$ psia

$D = 9$ in.

$A = 0.442$ ft^2

Mach Number ; P-1b

$$\left.\frac{m\sqrt{T_o}}{pA}\right)_5 = 0.662$$

$M_5 = 0.688$

Straight Duct ; P-2.2

$L = 38.25$

$$\frac{m}{D} = \frac{16}{0.75} = 21.3$$

$T_o = 1500\ ^oR$ $\qquad$ $Re = 1.1 \times 10^6$

$$\frac{\varepsilon}{D} = 0.00067$$

$$4\bar{f} = 0.0182$$

$$\frac{L}{D} = 51$$

$$4\bar{f}\,\frac{L}{D} = 0.928$$

$$M_5 = 0.688\,; \quad \left(4\bar{f}\,\frac{L_{max}}{D}\right)_5 = 0.225\,; \qquad \left.\frac{p_o}{p_o^*}\right)_5 = 1.102$$

$$\left.4\bar{f}\,\frac{L_{max}}{D}\right)_4 = 0.225 + 0.928 = 1.153$$

$$M_4 = 0.490 \qquad \left.\frac{p_o}{p_o^*}\right)_4 = 1.36$$

$$\frac{p_{o5}}{p_{o4}} = 0.810$$

Bend, 180° ; P-7.2

$$\frac{R}{D} = 1.0$$

$$M_4 = 0.490$$

$$Re = 1.1 \times 10^6$$

$$Cp_o = 0.177$$

Assume $M_3 = 0.470$

$$K_B = 1.086 \qquad K_B\,Cp_o = 0.192$$

$$1 - \frac{p_{o4}}{p_{o3}} = 0.025 \qquad \frac{p_{o4}}{p_{o3}} = 0.975$$

$$\frac{m\sqrt{T_o}}{P_{o3}A} = 0.379$$

$$\frac{m\sqrt{T_o}}{P_{o4}A} = 0.389$$

$$M_4 = 0.487$$

Straight Duct : P-2.2

$$L = 21 \text{ ft}$$

$$\frac{m}{D} = 21.3$$

$$Re = 1.1 \times 10^6$$

$$\frac{\epsilon}{D} = 0.00067$$

$$4\bar{f} = 0.0182$$

$$\frac{L}{D} = \frac{21}{0.75} = 28$$

$$4\bar{f}\,\frac{L}{D} = 0.510$$

$$M_3 = 0.470$$

$$4\bar{f}\,\frac{L_{max}}{D}\Big)_3 = 1.35 \qquad \frac{P_o}{P_o^*}\Big)_3 = 1.40$$

$$4\bar{f}\,\frac{L_{max}}{D}\Big)_2 = 1.35 - 0.51 = 1.86$$

$$M_2 = 0.429 \qquad \frac{P_o}{P_o^*}\Big)_2 = 1.55 \qquad \frac{P_{o3}}{P_{o2}} = 0.933$$

Bend, 180° ; 2-7.2

$$\frac{R}{D} = 3.33$$

$$Re = 1.10 \times 10^6 \qquad C\phi_o = 0.045$$

Assume $M_1 = 0.425$

$$K_B = 1.02$$

$$K_\phi = 1.53$$

$$K_\phi K_B C\phi_o = 0.0746$$

$$1 - \frac{P_{o2}}{P_{o1}} = 0.0094$$

$$\frac{P_{o2}}{P_{o1}} = 0.991$$

$$\frac{m\sqrt{T_o}}{P_{o1} A} = 0.351$$

$$\frac{m\sqrt{T_o}}{P_{o2} A} = 0.355$$

$$M_2 = 0.430$$

Pressure Ratio for Exhaust Duct:

$$\frac{P_{o5}}{P_{o1}} = (0.810)(0.975)(0.9[illegible])(0.991) = 0.728$$

Total Pressure in Exhaust Duct : P-1a

$M_5 = 0.688$

$\frac{m\sqrt{T_0}}{P_{05}A_5} = 0.583$

$m = 16$ lbs/sec

$T_0 = 1500\,^{\circ}R$

$A = 0.442\ ft^2$

$$P_{05} = \frac{(16)(1500)}{(0.442)(0.583)(144)} = 27.5 \text{ psia}$$

$P_{01} = 24.0$ psia

5.2 Effect of Pressure Loss on Turbine Performance

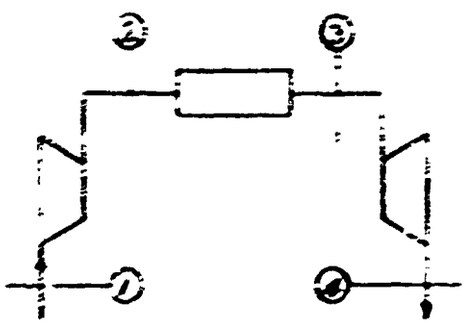

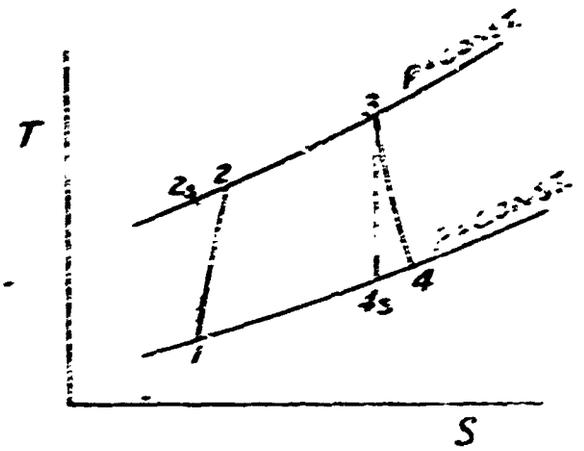

$$\frac{HP}{m_a} = W_x = \left(1 + \frac{m_f}{m_a}\right) \eta_T C_p T_{o3} \left(1 - \frac{T_{4s}}{T_{o3}}\right) - \frac{C_p T_{o1}}{\eta_c} \left(\frac{T_{o2s}}{T_{o1}} - 1\right)$$

$$= \left(1 + \frac{m_f}{m_a}\right) \eta_T C_p T_{o3} \left(1 - \left[\frac{p_4}{p_{o3}}\right]^{k-1/k}\right)$$

$$- \frac{C_p T_{o1}}{\eta_c} \left(\left[\frac{p_{o2}}{p_{o1}}\right]^{k-1/k} - 1\right)$$

Assume turbine nozzles choked

(1) Increase in turbine exhaust pressure, p_4:

$$\frac{\partial W_x}{\partial p_4} = - \left(1 - \frac{m_f}{m_a}\right) \eta_T C_p T_{o3} \frac{1}{p_{o3}} \frac{k-1}{k} \left(\frac{p_4}{p_{o3}}\right)^{-1/k}$$

Multiply by p_4

$$-\frac{\partial W_x}{\frac{\partial p_4}{p_4}} = \left(1 + \frac{m_f}{m_a}\right) \eta_T C_p \frac{k-1}{k} T_{o3} \left(\frac{p_4}{p_{o3}}\right)^{k-1/k}$$

Let $r_p = \frac{p_{o3}}{p_4} = \frac{p_{o2}}{p_{o1}}$, design pressure ratio

Linearizing,

$$\frac{\Delta HP}{m_a} = \Delta W_x = -\left(1 + \frac{m_f}{m_a}\right) \eta_T C_p \frac{k-1}{k} T_{o3} \left(\frac{1}{r_p}\right)^{k-1/k} \left(\frac{\Delta p}{p}\right)_4$$

$$\frac{\Delta HP}{m_a} = -C_T \left(\frac{\Delta p}{p}\right)_4$$

(2) Decrease in compressor inlet pressure, p_{o1}:

Assume compressor pressure ratio does not change

$$p_{o3} = p_{o2} = r_p p_{o1} ; \quad \frac{p_4}{p_{o3}} = \frac{p_4}{r_p p_{o1}}$$

$$\frac{\partial W_x}{\partial p_{o1}} = +\left(1 + \frac{m_f}{m_a}\right) \eta_T C_p T_{o3} \frac{k-1}{k} \frac{p_4}{r_p} \left(\frac{p_4}{r_p p_{o1}}\right)^{-1/k} \frac{1}{p_{o1}^2}$$

Multiply by p_{o1},

$$\frac{\partial W_x}{\partial p_{o1}} = +\left(1 + \frac{m_f}{m_a}\right) \eta_T C_p T_{o3} \frac{k-1}{k} \left(\frac{p_4}{r_p p_{o1}}\right)^{k-1/k}$$

Linearizing,

$$\frac{\Delta HP}{m_a} = \Delta W_x = +\left(1 + \frac{m_f}{m_a}\right) \eta_T C_p \frac{k-1}{k} T_{o3} \left(\frac{1}{r_p}\right)^{k-1/k} \left(\frac{\Delta p_o}{p_o}\right)_i$$

$$\frac{\Delta HP}{m_a} = C_T \left(\frac{\Delta p_o}{p_o}\right)_i$$

Numerical Example

Turbine conditions:

SHP ≈ 1100 HP

Fuel-Air Ratio - 0.014 lb fuel/lb air
Efficiency - 0.70
Turbine Inlet Temperature - 2060°R
Design Pressure Ratio - 6.5

Assume $C_p = 0.24$, $k = 1.4$

$$C_T = \left(1 + \frac{m_f}{m_a}\right) \eta_T C_p \frac{k-1}{k} T_{o3} \left(\frac{1}{r_p}\right)^{k-1/k}$$

$$= (1.014)(0.70)(0.24)(0.286)(2060)\left(\frac{1}{6.5}\right)^{.286} \frac{778}{550}$$

$$= 83.1 \quad HP/lb/sec$$

Inlet:

$$\Delta HP = m_a C_T \frac{\Delta p_o}{p}$$

$$m_a = 15 \text{ lb/sec}$$

$$C_T = 83.1 \quad HP/lb\ sec$$

$$\left(\frac{\Delta p_o}{p_o}\right)_1 = \frac{p_{atm} - p_{o1}}{p_{atm}} = \frac{14.7 - 10.3}{14.7} = 0.3$$

$$\Delta HP = -(15)(83.3)(0.3) = -375 \text{ HP}$$

Exhaust:

$$\Delta HP = -m_a C_T \frac{\Delta p}{p}$$

$$m_a = 16 \text{ lb/sec}$$

$$C_T = 83.1 \text{ HP/lb/sec}$$

$$M_4 = 0.425$$

$$\left(\frac{p}{p_o}\right)_4 = 0.883 \; ; \quad p_{o4} = 23.4 \text{ psi}$$

$$\left(\frac{\Delta p}{p}\right)_4 = \frac{p_4 - p_{atm}}{p_{atm}} = \frac{21.2 - 14.7}{14.7} = 0.442$$

$$\Delta HP = -(16)(83.3)(0.405) = -588 \text{ HP}$$

NOMENCLATURE

A	Cross-sectional area, ft^2
Cp_o	Total pressure loss coefficient
D	Diameter of duct, ft
D_e	Equivalent diameter of non-circular cross-section duct, $\frac{A}{4 \times \text{wetted perimeter}}$
K_B	Pressure coefficient compressibility factor for bends
K_D	Pressure coefficient compressibility factor for diffusers
K_ϕ	Bend angle loss factor
L	Duct length, ft
L_{max}	Duct length to attain $M = 1.0$, in a constant area duct, ft
M	Mach Number
R	Gas constant, lb force - ft/lb mass - ^oR
Re	Duct Reynolds Number, $\rho V D/\mu$
Re_x	Inlet length Reynolds Number, $\rho V x/\mu$
T	Temperature, ^oR
V	Velocity, ft/sec
c	Local velocity of sound, ft/sec
$\bar{f}$	Friction factor, fully developed flow

NOMENCLATURE (Cont'd)

f_1	Friction factor, inlet laminar length
f_2	Friction factor, inlet turbulent length
g_o	constant = 32.2 lb mass-ft/lb force-sec^2
k	Ratio of specific heats
m	Mass flow rate, lb mass/sec
p	Pressure, psf
s	Screen solidity = open area in screen/duct area
x	Distance from duct entrance, ft

Greek

ϵ	Duct wall roughness, ft
2θ	Angle between diffuser walls, degrees
μ	Viscosity, lb mass/sec-ft
ρ	Density, lb mass/ft^3
ϕ	Angle of duct bend, degrees

Superscripts

*	State at M = 1.0

NOMENCLATURE (Concl'd)

Subscripts

o	Stagnation or total state; condition of fluid brought to rest isentropically
1	State upstream of component
2	State downstream of component
tr	Transition point from laminar to turbulent flow
2'	State, four diameters downstream of state 1

Special Nomenclature for Turbine Performance Calculation

C_p	specific heat, Btu. ^oR
C_T	turbine power constant $\equiv 1 + \frac{m_f}{m_a} \eta_T C_p \frac{k-1}{K} T_{o3} \frac{1}{r_p}^{\frac{k-1}{k}}$
HP	net power delivered by turbine unit, horsepower
W_x	net shaft work, ft. lbs/lb. of air
m_f	mass flow rate of fuel, lbs/sec
m_a	mass flow rate of air, lbs/sec
r_p	design pressure ratio
η_c	compressor efficiency
η_T	turbine efficiency

BIBLIOGRAPHY

1. Design Data Sheet, Department of the Navy, Bureau of Ships, DDS 3801-2, 22 July 1956.

2. Shapiro, A.H. The Dynamics and Thermodynamics of Compressible Fluid Flow, Vol. I, Ronald Press, New York, 1953.

3. Keenan, J.H., and Kaye, J. Gas Tables, John Wiley and Sons, New York, 1948

   Note: Compressible Flow Tables are also available in:

   Shapiro, A.H., Hawthorne, W.R., and Edelman, G.M. The Mechanics and Thermodynamics of Steady One-Dimensional Gas Flow with Tables for Numerical Solutions, Meteor Report No. 14, Massachusetts Institute of Technology ~~Guided Missiles~~ Program, Cambridge, Mass., 1947; and

   Shapiro, A.H., Hawthorne, W.R., and Edelman, G.M. The Mechanics and Thermodynamics of Steady One-Dimensional Gas Flow, in Handbook of Supersonic Aerodynamics, NAVORD Report 1488, Vol. I.

4. Moody, L.F. Friction Factors for Pipe Flow, Transactions of the A.S.M.E., November 1944.

5. Keenan and Neumann, Measurements of Friction in a Pipe for Subsonic and Supersonic Flow of Air, Jour. Appl. Mech., Vol. 13 No. 2 (1946), p A-91.

Best Available Copy

Bibliography (Cont'd)

6. Langhaar, H L. Steady Flow in the Transition Length of a Straight Tube, Journal of Applied Mechanics, June 1942.

7. Shapiro, A.H. and Smith R.D. Friction Coefficients in the Inlet Length of Smooth Round Tubes, NACA TN 1785, November 1948.

8. Henry, J.R. Design of Power Plant Installations. Pressure-Loss Characteristics of Duct Components, NACA WR L-208, 1944.

9. Hall, W.B., and Orme, E.M. Flow of a Compressible Fluid Through a Sudden Enlargement in a Pipe, Proceedings of the Institute of Mechanical Engineers, Vol. 169, No. 49, 1955.

10. Cole, B.N. and Mills, B. Theory of Sudden Enlargements Applied to the Poppet Exhaust-valve, with Special Reference to Exhaust-pulse Scavenging, Proceedings of the Institute of Mechanical Engineers, Vol. 1B, p 364.

11. Hunsaker, J.C., and Rightmire, B.G. Engineering Applications of Fluid Mechanics, McGraw-Hill, 1947.

12. Cornell, W.G. Losses in Flow Normal to Plane Screens, Transactions of the A.S.M.E., May, 1958.

13. Patterson, G.N. Modern Diffuser Design, Aircraft Engineering, September, 1938.

Bibliography (Concl'd)

14. Young, A. D., and Green, G. L. Tests of High-Speed Flow in Diffusers of Rectangular Cross-section, R & M No. 2201, British A. R. C., July 1944.

15. Little, B. H., Jr., and Wilbur, S. W. Performance and Boundary Layer Data from 12° and 23° Conical Diffusers of Area Ratio 2.0 at Mach Numbers up to Choking and Reynolds Numbers up to 7.5×10^6, NACA Report 1201, 1954.

16. Young, A. D., Green, G. L. and Owen. P. R. Tests of High-Speed Flow in Right-angled Pipe Bends of Rectangular Cross-Section, R & M No. 2066, British A. R. C., October, 1943.

17. Higginbotham, J. T., Wood, C. C., and Valentine, E. F. A Study of the High-Speed Performance Characteristics of 90° Bends in Circular Ducts, NACA TN 3696, June, 1956.

18. Friedman, D., and Westphal, W. R., Experimental Investigation of a 90° Cascade Diffusing Bend with an Area Ratio of 1.45: 1 and with Several Inlet Boundary Layers, NACA TN 2668, April, 1952.

19. Grey, R. E., Jr., and Wilsted, H. D., Performance of Conical Jet Nozzles in Terms of Flow and Velocity Coefficients, NACA TN 1757, November, 1948.

20. von Karman, T., Compressibility Effects in Aerodynamics, Journal of the Aeronautical Sciences, July, 1941.

DYNATECH *Corporation*

639 MASSACHUSETTS AVENUE

CAMBRIDGE 39, MASSACHUSETTS

617-UN 8-6050