AD641648

RADC-TR-66-122

SINGLE AND CASCADED WIDEBAND TRANSISTOR AMPLIFIERS

J. B. Payne

TECHNICAL REPORT NO. RADC-TR-66-122

September 1966

Distribution of this document is unlimited

CLEARINGHOUSE
FOR FEDERAL SCIENTIFIC AND
TECHNICAL INFORMATION

Hardcopy	Microfiche		
$ 4.00	$ .75	104 pp	as

ARCHIVE COPY

DDC
NOV 14 1966
A

Rome Air Development Center
Research and Technology Division
Air Force Systems Command
Griffiss Air Force Base, New York

When US Government drawings, specifications, or other data are used for any purpose other than a definitely related government procurement operation, the government thereby incurs no responsibility nor any obligation whatsoever; and the fact that the government may have formulated, furnished, or in any way supplied the said drawings, specifications, or other data is not to be regarded, by implication or otherwise, as in any manner licensing the holder or any other person or corporation, or conveying any rights or permission to manufacturer, use, or sell any patented invention that may in any way be related thereto.

Do not return this copy. Retain or destroy.

BLANK PAGE

SINGLE AND CASCADED WIDEBAND TRANSISTOR AMPLIFIERS

J. B. Payne

Distribution of this document is unlimited

AFLC, GAFB, N.Y., 9 Nov 66-125

FOREWORD

This report was prepared by Dr. John B. Payne III, Techniques Branch, Rome Air Development Center, under Project 4506, Task 450601.

This report summarizes the conclusions and recommendations of the basic high frequency transistor configurations and experimental data obtained from both single and multiple stage amplifiers having bandwidths ranging from 200 to 800 megahertz.

The author wishes to acknowledge the assistance of Michael Halayko, whose aid in obtaining experimental test data and reviewing the text of this report was invaluable.

This report has been reviewed and is approved.

Approved: ARTHUR J. FROHLICH
Chief, Techniques Branch
Surveillance and Control Division

Approved: THOMAS S. BOND, JR.
Col, USAF
Chief, Surveillance and
Control Division

FOR THE COMMANDER: IRVING J. GABELMAN
Chief, Advanced Studies Group

ABSTRACT

With the realization of high frequency transistors having current and power gain-bandwidth products in the gigahertz region, ultra wideband amplifiers are now possible. This report presents an analysis of the basic high frequency transistor configurations, along with experimental data, obtained from both single and multiple stage amplifiers having bandwidths ranging from 200 to 800 megahertz (MHz). A discussion is included of the important parameters that determine transistors' high frequency response along with problems associated with layout and component selection. Various techniques for trading gain for bandwidth are treated and experimentally reported. A new approach for designing wideband cascaded amplifiers, that require a minimum of adjustments, yet yield near optimum performance, is given.

BLANK PAGE

TABLE OF CONTENTS

PART I

SINGLE STAGE WIDEBAND AMPLIFIERS

Section	Title	Page
	INTRODUCTION	1
I	SUMMARY OF GENERAL THEORY FOR HIGH FREQUENCY TRANSISTOR	2
	A. Introduction	2
	B. Common Emitter	3
	C. Grounded Base	9
II	THEORETICAL AND EXPERIMENTAL RESULTS OF SINGLE STAGE WIDEBAND TRANSISTOR AMPLIFIER	13
	A. Common Emitter - No Feedback	13
	B. Gain Bandwidth Trade	20
	1. Gain Bandwidth Trade by Use of Z_L	20
	2. Gain Bandwidth Trade by Use of Feedback	29
	a. Emitter Feedback	29
	b. Collector Feedback	38
	C. Grounded Base	45

PART II

CASCADING WIDEBAND AMPLIFIERS

I	DESIGN THEORY OF CASCADED WIDEBAND TRANSISTOR AMPLIFIER	51
	A. Introduction	51
	B. Amplifier Selection for Cascaded Chain	51
	1. Ground Emitter	55
	2. Common Emitter - Emitter Feedback	57
	3. Grounded Emitter - Collector-Base Feedback	59
	4. Grounded Base Amplifier	61
	C. Design Procedure	62
II	EXPERIMENTAL RESULTS	63
	A. Introduction	63
	B. Practical Considerations	64
	C. Components	66
	D. Two-Stage Cascaded Amplifiers Chain	68
	1. Emitter Feedback - Grounded Base Amplifier	69
	2. Emitter Feedback - Collector Base Feedback Amplifier	72
	3. Cascading Two Emitter Feedback - Collector Base Feedback Amplifiers	79

TABLE OF CONTENTS (Continued)

Section	Title	Page
II (cont'd)	E. Three Stage Cascaded Amplifier	79
	F. Cascading Three Identical Three-Stage Amplifiers	83
III	DESCRIPTION OF MEASUREMENT TECHNIQUES AND ASSOCIATED EQUIPMENT	85
	A. Amplitude Response Measurements	85
	B. Phase Response	87
IV	CONCLUSIONS AND RECOMMENDATIONS	91
	REFERENCES	93
	APPENDIX	95

LIST OF ILLUSTRATIONS

Figure	Title	Page
1	Single Amplifier Symbolism	2
2	Symbolism for Cascaded Pair	3
3	Common Emitter Equivalent Circuit	4
4	Frequency-Log Scale	7
5	Grounded Base Equivalent Circuit	10
6	Theoretical Grounded Emitter Amplifier Response	14
7	Common Emitter Circuit Diagram	17
8	Experimental Grounded Emitter Amplifier Response	18
9	Load Configurations for Trading Gain for Bandwidth	21
10	Theoretical Amplifier Response	22
11	Experimental Grounded Emitter Amplifier Response with R-L and Auto Transformer Loads	27
12	Emitter Feedback Equivalent Circuit	29
13	Amplifier Response with Emitter Feedback	31
14	Wiring Diagram for 4:1 Impedance Transformer	38
15	Emitter Feedback Circuit and Response Using a Wideband Transformer	39
16	Emitter Feedback and Wideband Transformer with Inductive Peaking Added	40
17	Emitter Feedback with Inductive Peaking	41
18	Collector-Base Feedback Amplifier	42
19	Frequency Response of Collector-Base Feedback Amplifier	43
20	Grounded Base Amplifier Equivalent Circuit	46
21	Wideband Amplifier	48
22	Grounded Base Amplifier Response Using Wideband Transformers	49
23	Wideband Transformer and Series Peaking	50
24(a)	Schematic Diagram of a Single Stage Amplifier	52
24(b)	Frequency Response of a Single-Stage Amplifier	52
25	Frequency Response of a Three-Stage Amplifier	53
26	Grounded Emitter Input Circuit	56
27	Feedback Amplifier Equivalent Circuit	60
28	Block Diagram for Two Stage Cascaded Amplifier	61

LIST OF ILLUSTRATIONS (Continued)

Figure	Title	Page
29	Cascaded Amplifier Triplet	62
30	Amplitude Response from Poor Amplifier Layout	65
31	Circuit for Emitter Feedback - Ground Base Wide Band Amplifier	70
32	Emitter Feedback - Grounded Base Gain-Phase versus Frequency Response	71
33	Circuit for Emitter Feedback - Collector Base Feedback Amplifier	73
34	Inductive Effects on Amplifier Response	74
35	Emitter Feedback - Collector Base Feedback Gain-Phase versus Frequency Response	76
36	Emitter Feedback - Collector Base Feedback Amplifier Response Using 2N2999 in Configuration of Figure 33(b)	78
37	Block Diagram for Four-Stage Cascaded Amplifier	79
38	Response of Two Cascaded Emitter Feedback - Collector Base Feedback Stages	80
39	Block Diagram for Three-Stage Cascaded Amplifier	81
40	Three-Stage Cascaded Amplifier	82
41	Amplitude and Phase Response for Three-Stage Cascaded Amplifier	83
42	Block Diagram for Nine-Stage Cascaded Wideband Amplifier	84
43	Amplitude and Phase Response for Nine-Stage Cascaded Amplifier	84
44	Amplitude Measurement Technique	86
45	Photograph of Test Equipment	87
46	Photograph of Signal Generator's Output	88
47	Phase Measurement Technique	89
48	Photograph of Phase Measuring Equipment	90

SINGLE AND CASCADED WIDEBAND TRANSISTOR AMPLIFIERS

PART I

SINGLE STAGE WIDEBAND AMPLIFIERS

INTRODUCTION

With the realization of high frequency transistors having current gain-bandwidth products, f_t, in the gigacycle region, ultra wideband amplifiers are now possible. The analysis, design and construction of ultra wideband (400 MHz or greater) amplifiers is quite simple and straightforward when a little experience has been gained. Little has been written on this subject since to a certain extent the construction of wideband multi-stage amplifiers is as much an art as it is a science. The purpose of this report is to analyze the basic transistor configurations and present experimental data obtained from single and multiple stage amplifiers.

This report is divided into two parts. Part I presents a brief analysis of the two basic amplifier configurations, namely the common emitter and common base configuration. The important transistor parameters that determine their high frequency response are also discussed. Various techniques for trading gain for bandwidth are treated and experimental results given.

Part II treats the problems of cascading single stage amplifiers. Generally, optimum performance and minimum adjustments are not obtained when identical stages are cascaded. This is due to internal as well as external feedback interaction. Compensating for such interaction requires much time and experience and thus is not well suited for mass production techniques. In Part II a technique for designing ultra wideband cascaded amplifiers with minimum interaction and adjustments is discussed. Experimental results obtained by using such a procedure to build wideband cascaded amplifiers are given.

The primary object of the experimental results was to verify the analysis and design procedures and not to demonstrate the maximum bandwidths obtainable with state-of-the-art components. Most of the transistors used had current gain-bandwidth products ranging from 600 MHz to 900 MHz. For this reason 5 db bandwidths of the order of 400 MHz were obtained. Using the design procedures outlined, bandwidths of the order of 1,000 MHz are obtainable with higher quality, higher frequency transistors. In a few instances results using better transistors are given.

I. SUMMARY OF GENERAL THEORY FOR HIGH FREQUENCY TRANSISTOR

A. INTRODUCTION

It is well known that a transistor amplifier can take three basic forms. Namely:

1. Common emitter
2. Common base
3. Common collector

Although the common collector configuration is capable of power gain it is generally not used as an amplifier in wideband applications. Therefore, it will not be considered here.

With respect to the remaining two amplifier configurations, we shall consider each with regard to its input-output characteristics, gain, bandwidth and maximum frequency of oscillation. Where applicable, the transistors input and output impedance will also be considered.

Some transistor amplifier configurations require a current source as a driving generator while others require voltage sources. Likewise, their output characteristics can approximate either current or voltage generators depending on their design. Therefore, for maximum performance, amplifiers designed to be driven from a current source must be preceded by an amplifier designed with the output characteristics of a current generator. This technique or procedure is particularly important when cascading amplifiers. In Part II, the technique is discussed in detail and is shown to produce amplifier chains requiring minimum adjustment and producing near maximum performance.

In classifying the various configurations studied in Part I, the symbolism shown in Figure 1 will be employed. The letter above the amplifier input indicates the type driving source for optimum performance. The letter "e" indicates a voltage source while "i" indicates a current source. The letter above the output terminal is used to indicate the output characteristics of the amplifier; that is, whether it approximates a current or voltage generator. For example, the amplifier of Figure 1(c) should be driven from a current source and its output is similar to a voltage generator. This could be obtained by using a grounded emitter stage with collector-base feedback, as shown in Part II.

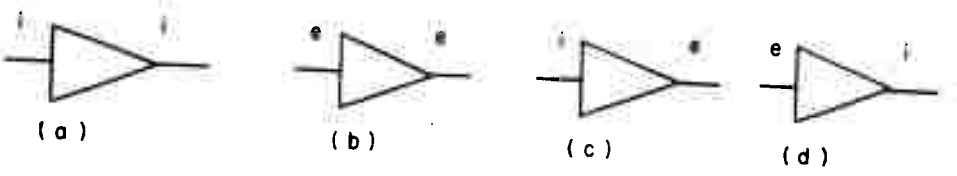

Figure 1. Single Amplifier Symbolism

When cascading amplifiers, it is desirable that the connected terminals have the same symbols or similar characteristics as the example shown in Figure 2. Amplifier 1 should be driven from a voltage source (low impedance) such as a properly terminated transmission line. The output of the amplifier is a current generator and as such is ideal for driving amplifier 2. This amplifier should be driven from a current generator. The output of amplifier 2 is a voltage generator and is ideally suited for driving an amplifier such as 1.

Figure 2. Symbolism for Cascaded Pair

In the following two sections, we shall consider the general relationship by which we describe both the common emitter and base amplifier.

B. COMMON EMITTER

That the grounded emitter configuration of Figure 3(a) is a current amplifying device can be seen from the simplified equivalent circuit of Figure 3(c). A detailed analysis of this amplifier configuration can be found in references 1 and 2. In Figure 3(b) the base capacitance C_{be} includes both the emitter diffusion and barrier capacitances. Likewise the collector-to-base capacitances C_{bc} is made up of both the collector diffusion and barrier capacitance. Since the emitter junction is forward biased and the collector junction is reverse biased

$$C_{bc} \ll C_{be}. \tag{1}$$

For the same reason the emitter resistance r_ϵ is small and the collector resistance, r_c, is quite large.

In Figure 3(c) the lumped base capacitance C includes both the base-emitter capacitance C_{be} and the reflected base-collector capacitance, C_{bc}. Here, the base-collector capacitance C_{bc} is increased by the Miller effect. Thus, the effective base capacitance for the common emitter case becomes

$$C = C_{be} + C'_{bc} \doteq C_{be} + C_{bc}\left(1 + \frac{\beta R_L}{r_{be}}\right) \tag{2}$$

where $\frac{\beta R_L}{r_{be}}$ is approximately the amplifier's voltage gain.

In Figure 3(c), r_{be} is just the emitter resistance r_ϵ reflected into the base, i.e., $r_{be} = \beta r_\epsilon$. It is also seen that C_{bc} shunts the output load Z_L.

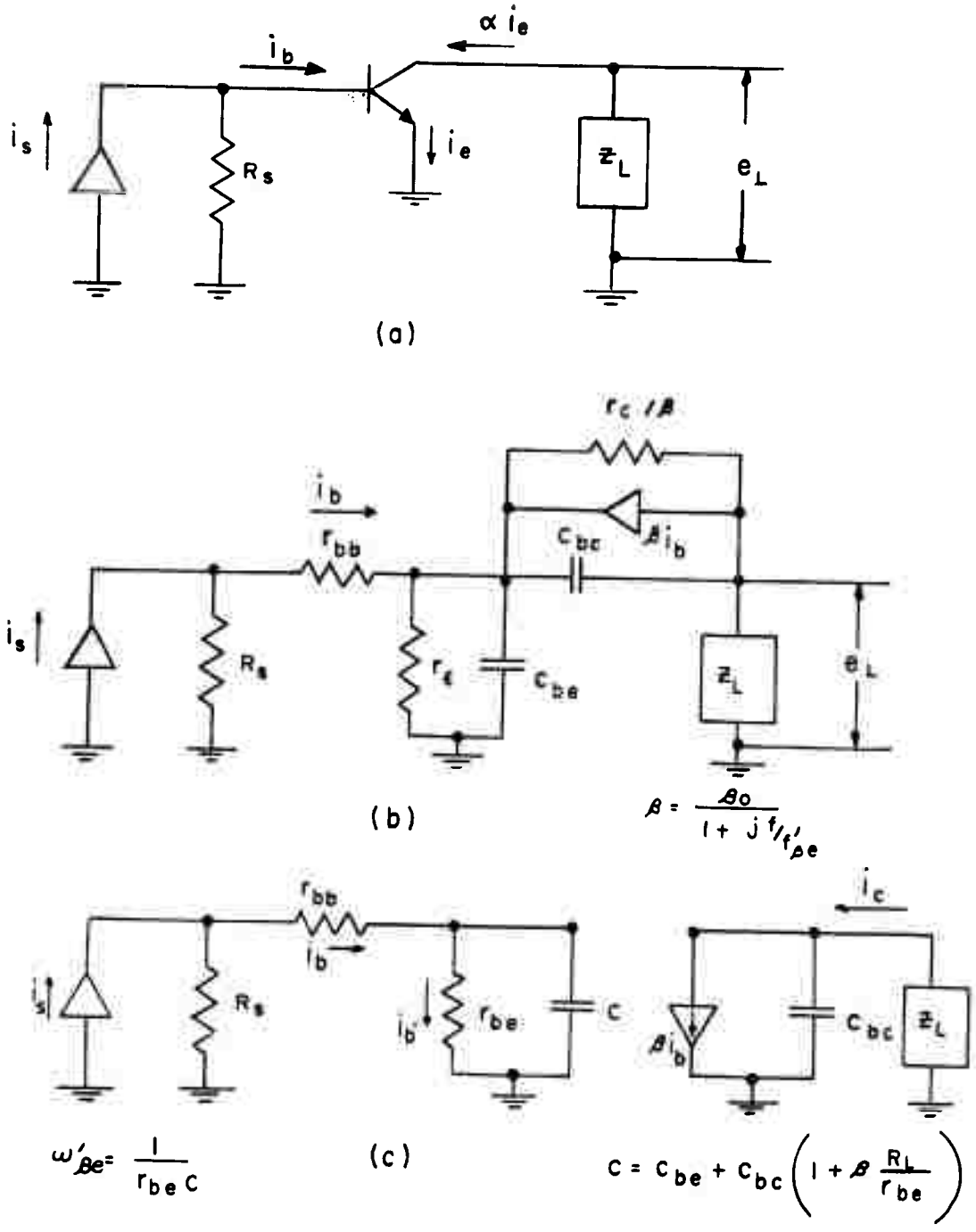

Figure 3. Common Emitter Equivalent Circuit

The collector signal current i_c is equal to the current $i_{b'}$ flowing through the base-emitter resistance r_{be} times the transistor's low frequency current gain, β_o, i.e., $i_c = \beta_o i_{b'}$; or in terms of external currents it is the base current i_b times the high frequency current β which is related to β_o by the relation

$$\beta = \frac{i_c}{i_b} = \frac{\beta_o}{1 + j\frac{\omega}{\omega'_{\beta e}}} . \tag{3}$$

$\omega'_{\beta e}$ is here called the common-emitter base-cutoff frequency and is given by

$$\omega'_{\beta e} = \frac{1}{r_{be}C} . \tag{4}$$

This is the frequency at which the transistor's current gain β has dropped 3 db below β_o. From Equation (2) it is seen that $\omega'_{\beta e}$ is a function of R_L. Substituting Equation (2) we can write

$$\frac{1}{\omega'_{\beta e}} = \frac{1}{\omega_{\beta e}} + \frac{1}{\omega_{bc}} \tag{5}$$

where

$$\omega_{\beta e} = \frac{1}{r_{be}C_{be}} = \text{Beta-Cutoff Frequency}$$

and

$$\omega_{bc} = \frac{1}{r_{be}C_{bc}} ,$$

The angular frequency $\omega_{\beta e}$ has been termed the beta-cutoff frequency because for a given transistor this is the maximum 3 db current gain cutoff frequency attainable, since ω_{bc}, the base-collector time constant, is a function of the amplifier's voltage gain (i.e., proportional to R_L). When the "h" parameters are used the symbol $\omega_{\beta e}$ is termed the beta-cutoff frequency because it is defined when the amplifier's output is short circuited and, as such, is the transistor's maximum possible beta-cutoff frequency. It can be seen from Equation (5) that $\omega'_{\beta e}$ varies with R_L for a given transistor and will have its maximum value when $R_L = 0$. Since $C_{bc} << C_{be}$ we have

$$\omega'_{\beta e} \rightarrow \omega_{\beta e} \quad \text{as} \quad R_L \rightarrow 0 .$$

Generally when the amplifier's gain is under 6 db, the feedback effect is negligible and $\omega'_{\beta e}$ and $\omega_{\beta e}$ can be used interchangeably.

The transistor's current gain - bandwidth product f_t (f_t and ω_t are used interchangeably) is defined as the maximum obtainable bandwidth when the current gain is unity. From the foregoing discussion it is seen that f_t must be defined for the short

circuit output case in which $\omega'_{\beta e} = \omega_{\beta e}$. From Equation (3) we can obtain the relation between f_t or ω_t and $\omega_{\beta e}$ by letting $\beta = 1$, $\omega'_{\beta e} = \omega_{\beta e}$ and solving for

$$\omega_t = \omega_{\beta e} (\beta_o - 1). \tag{6}$$

In most modern transistor applications, the collector output time constant $R_L C_{bc}$ is much shorter than the base time constant $r_{be}C$. That is

$$r_{be}C \gg R_L C_{bc} \tag{7}$$

When this is true, the dominant factor, in determining the amplifier frequency characteristics, is the base time constant.

From Figure 3(a) "alpha", the emitter-collector current gain, is defined as

$$\alpha = \frac{i_c}{i_e} = \frac{\beta}{\beta + 1} \tag{8}$$

From Equation (3) the frequency dependence of "alpha" reduces to

$$\alpha = \frac{\alpha_o}{1 + j\frac{\omega}{\omega'_{\alpha e}}} \tag{9}$$

where $\omega'_{\alpha e} = (1 + \beta_o)\, \omega'_{\beta e}$. $\omega'_{\alpha e}$ is defined similarly to $\omega'_{\beta e}$ in Equation (5). Thus

$$\frac{1}{\omega'_{\alpha e}} = \frac{1}{\omega_{\alpha e}} + \frac{1}{\omega_{\alpha c}} \tag{10}$$

The frequency

$$\omega_{\alpha e} = (1 + \beta_o)\, \omega_{\beta e} \tag{11}$$

and is termed the common emitter "alpha" cutoff frequency. It is the maximum possible frequency when α is 3 db down from α_0. Again this comes from the use of the "h" parameters.

The effect of the frequency variation of alpha on beta is quite severe. Beta is given by the magnitude

$$\left|\beta\right| = \left|\frac{\alpha}{1 - \alpha}\right|$$

Since α is close to unity, it can be seen that a small change in α will produce a large change in β. The relationship of the beta and alpha cutoff frequencies ($\omega_{\alpha e}$ and $\omega_{\beta e}$) and f_t are shown in Figure 4.

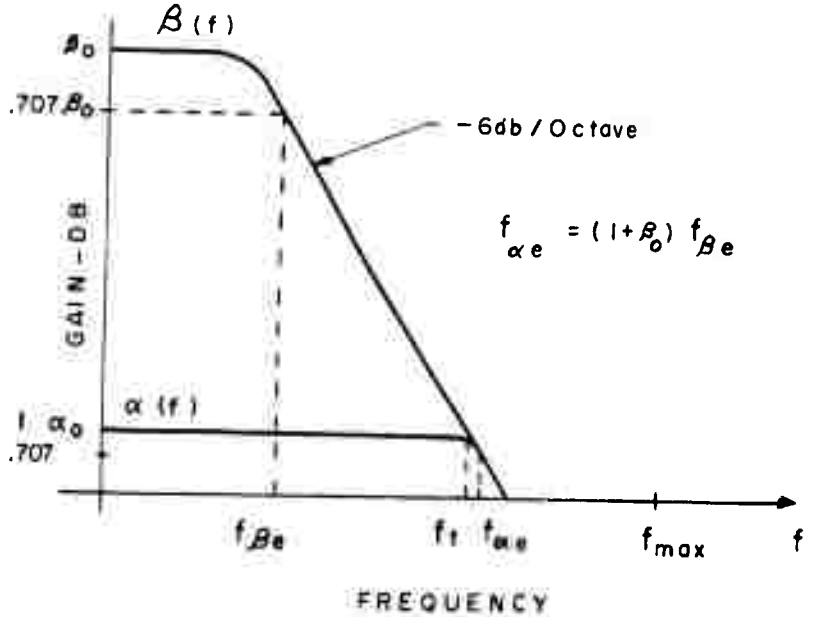

Figure 4. Frequency - Log Scale

One of the most important high frequency transistor parameters is the maximum current gain-bandwidth product, f_t. This is defined as the maximum frequency at which "beta" is equal to unity. In the common emitter configurations, this figure of merit represents the uppermost frequency where useful current gain is obtainable. Then, when the current gain is unity, the transistor's bandwidth is f_t. From Equations (6) and (11) we have that,

$$\omega_t = \omega_{\beta e} (\beta_o - 1) = \omega_{\alpha e} \frac{(\beta_o - 1)}{(\beta_o + 1)} \doteq \omega_{\alpha e} \tag{13}$$

Thus f_t is seen to be slightly smaller than the "alpha" cutoff frequency. The relation of f_t, $f_{\alpha e}$ and $f_{\beta e}$ is shown in Figure 4.

Since "beta" decreases at a 6 db/octave rate for frequencies above $f_{\beta e}$, the current gain bandwidth can conveniently be determined by measuring "beta" with $R_L = 0$, above $f_{\beta e}$ and extrapolate to $\beta = 1$. With beta dropping at 6 db/octave, the frequency is doubled each time beta is reduced by two.

For this reason, a reasonably close approximation to f_t is obtained by the product of the amplifier's 3 db bandwidth and its midband gain. From Equation (3) the bandwidth is $\omega_{\beta e}$ and the midband gain is β_o. Thus

$$\omega_t = \omega_{\beta e} \beta_o \doteq \omega_{\alpha e} \quad \text{when} \quad R_L = 0.$$

Because of the large change in impedance between the input and output of the transistor, appreciable power gain can be obtained at f_t even though beta is equal to unity. This can be seen by

$$G_P = \frac{P_{OUT}}{P_{IN}} = \frac{i^2_{OUT}}{i^2_{IN}} \frac{R_L}{R_{IN}} . \tag{14}$$

At f_t, $i_{IN} = i_{OUT}$ and thus $G_P = R_L/R_{IN}$. Therefore the maximum frequency of operation is defined as the maximum frequency of oscillation f_{max}, which is defined[3] as the frequency at which the power gain is equal to unity. Thus a second important gain-bandwidth product for the transistor is

$$(\text{power gain})^{1/2}\ (\text{bandwidth}) = \text{maximum oscillation frequency} = f_{max} \tag{15}$$

It is important to note that the parameters $f_{\alpha e}$, $f_{\beta e}$ and f_t are determined primarily by the transistor's base time constant $r_{be}C$. Except for the feedback effect, we have neglected the collector capacitance. In order to increase the maximum oscillator frequency f_{max}, it is necessary to increase the load impedance Z_L. However, as Z_L is increased. two mechanisms come into play to limit f_{max}. Namely, as Z_L is increased, the voltage gain of the amplifier rises, producing an increase in Miller feedback capacitance as shown in Equation (2). This increases C and thus decreases $f'_{\alpha e}$, $f'_{\beta e}$ and f_t. The second limitation occurs when the output time constant $C_{bc}\ R_L$ becomes comparable with the base time constant.

From fundamental network theory, it is known that maximum power transfer is achieved by matching the load to source resistance of the generator. In order to determine the maximum power gain realizable from the transistor, it is necessary to provide conjugate-matching of both the input and output characteristics. In actual practice, it is difficult to achieve perfect matching, however we can approach it. By calculating the power gain under optimum matching, we obtain both optimum theoretical power gain as well as indicating the important transistor parameters.

Phillips[4] has shown that above f_t, the grounded emitters input and output impedances, when conjugately matched, are approximately given by

$$\begin{aligned} R_e[Z_{IN}] &= r_{bb} \\ R_e[Z_{OUT}] &= \frac{1}{\omega_t C_{bc}} . \end{aligned} \tag{16}$$

The power gain for conjugate matching can be written as

$$G_P = \frac{\beta^2}{4} \frac{Z_{OUT}}{Z_{IN}} \tag{17}$$

Since

$$\beta^2 = \frac{\omega_t^2}{\omega^2} \quad (\text{for } \omega \geqslant \omega_t) \tag{18}$$

Equation (17) becomes

$$G_P = \frac{\omega_t}{4\omega^4 C_{bc} r_{bb}} = \frac{f_t}{8\pi f^2 r_{bb} C_{bc}} \tag{19}$$

When the transistor current gain is unity, i.e., $f = f_t$, the power gain is

$$G_P = \frac{1}{4\omega_t r_b C_{bc}} \tag{20}$$

Letting $G_P = 1$ in Equation (19), the maximum frequency of oscillation, f_{max}, becomes

$$f_{max} = \sqrt{\frac{f_t}{8\pi r_{bb} C_{bc}}} \tag{21}$$

Most manufacturers specify the collector-base time constant $r_{bb}C_{bc}$* as well as f_t for high frequency transistors. It is therefore important for grounded emitter operation to select the transistor with the smallest collector-base time constant and largest f_t when wideband operation is desired.

It should be noted that the conjugate matching has tuned out the output capacitance. This is just what we do to extend the frequency of operation of vacuum tubes. For broadband operations, we can add some peaking to approach f_{max} but cannot, in general, realize perfect conjugate matching.

C. GROUNDED BASE

The diagram and equivalent circuit for the grounded base amplifier configuration is shown in Figure 5. The base capacitance C_{be} includes both the emitter diffusion and barrier capacitances. Likewise the collector-to-base capacitance C_{bc} is made of a similar mechanism. Like the common emitter case, $C_{bc} \ll C_{be}$, resulting in an emitter time constant that is considerably greater than that of the collector.

---

* This term must be modified for different types of transistors. However, Equation (21) does give a fairly accurate indication of f_{max}.

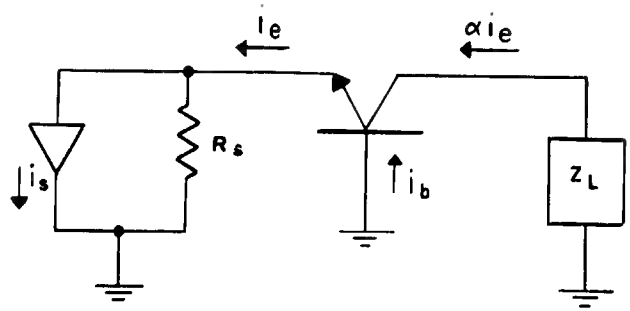

(a)

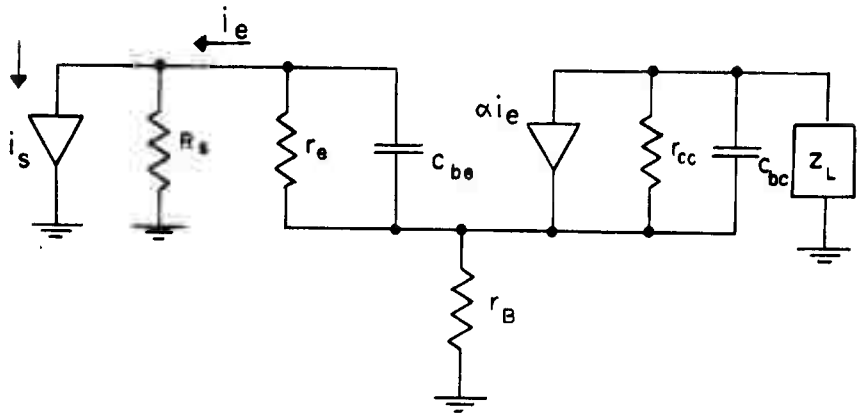

(b)

Figure 5. Grounded Base Equivalent Circuit

The grounded base current gain α is given by

$$\alpha = \frac{\alpha_0}{1 + j(\omega/\omega_{\alpha b})} \tag{22}$$

where

$$\omega_{\alpha b} = \frac{1}{r_{be} C_{be}} = \text{alpha cutoff frequency} \tag{23}$$

Here the Miller feedback effect is negligible. Thus the common base "alpha" cutoff $\omega_{\alpha b}$ is greater than the common emitter alpha cutoff $\omega'_{\alpha e}$.

For the grounded base configuration the current gain-bandwidth has little meaning. However, due to the large increase in impedance from emitter to collector, appreciable power gain is attainable. Therefore by matching the generator to $r_B[r_{bb} = (1 + \beta_o) r_B]$ and the output to $(1 + \beta_o)\omega_t C_{bc}$ yields a maximum power gain and frequency of oscillation identical to that for the common emitter case given by Equation (21).

It should be mentioned that the common base amplifier is unstable for large values of inductive loading. Inductive loading is necessary, however, when obtaining conjugate matched loads. The common emitter does not suffer from this instability problem.

BLANK PAGE

II. THEORETICAL AND EXPERIMENTAL RESULTS OF SINGLE STAGE WIDEBAND TRANSISTOR AMPLIFIER

A. COMMON EMITTER - NO FEEDBACK

The equivalent circuit for the common emitter amplifier without feedback is shown in Figure 3. Here the driving source is a current generator with source resistance R_S and load Z_L. From Equation (3) the expression for the transistor's ideal current gain is given by

$$\beta = \frac{i_L}{i_\beta} = \frac{\beta_o}{1 + j(f/f'_{\beta e})} = \frac{\beta_o}{\sqrt{1 + (f/f'_{\beta e})^2}} \angle \theta , \tag{24}$$

where

$$\theta = \tan^{-1}(f/f'_{\beta e})$$

The term $f'_{\beta e}$ is the base cutoff frequency and defined by Equation (5). Note that $f'_{\beta e}$ is less than the transistor's "beta" cutoff frequency $f_{\beta e}$ except when $R_L = 0$. More meaningful phase information is obtained by considering the phase deviation from linearity ϵ and/or the time delay τ rather than the phase response θ through the amplifier. Thus

$$\epsilon = 57.7 \frac{f}{f'_{\beta e}} - \tan \frac{f}{f'_{\beta e}} \tag{25}$$

and

$$\tau = \frac{d\theta}{d\omega} = \frac{1}{1 + (f/f'_{\beta e})^2} \left(\frac{1}{2\pi f'_{\beta e}} \right) \tag{26}$$

These expressions, Equations (24), (25) and (26) are plotted in Figure 6(a) and (b), curve 1. The amplifier gain β_o is down 3 db when

$$f_{3db} = f'_{\beta e} = \frac{f'_{\alpha e}}{(\beta_o + 1)} \tag{27}$$

Note from curve 1, Figure 6, that when the gain is down 3 db the phase has deviated from linearity by 13 degrees.

The current gain-bandwidth becomes

$$f_t = f'_{\alpha e} \frac{\beta_o}{\beta_o + 1} \doteq f'_{\alpha e} \tag{28}$$

which is the optimum obtainable for the transistor and load R_L.

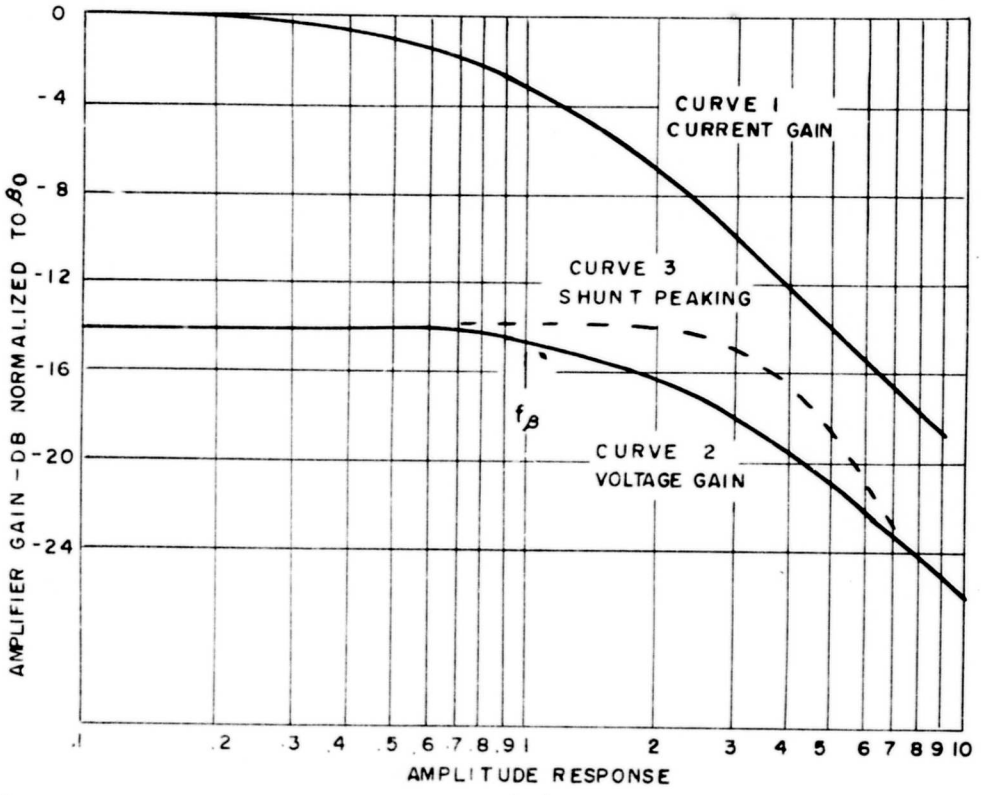

(a)

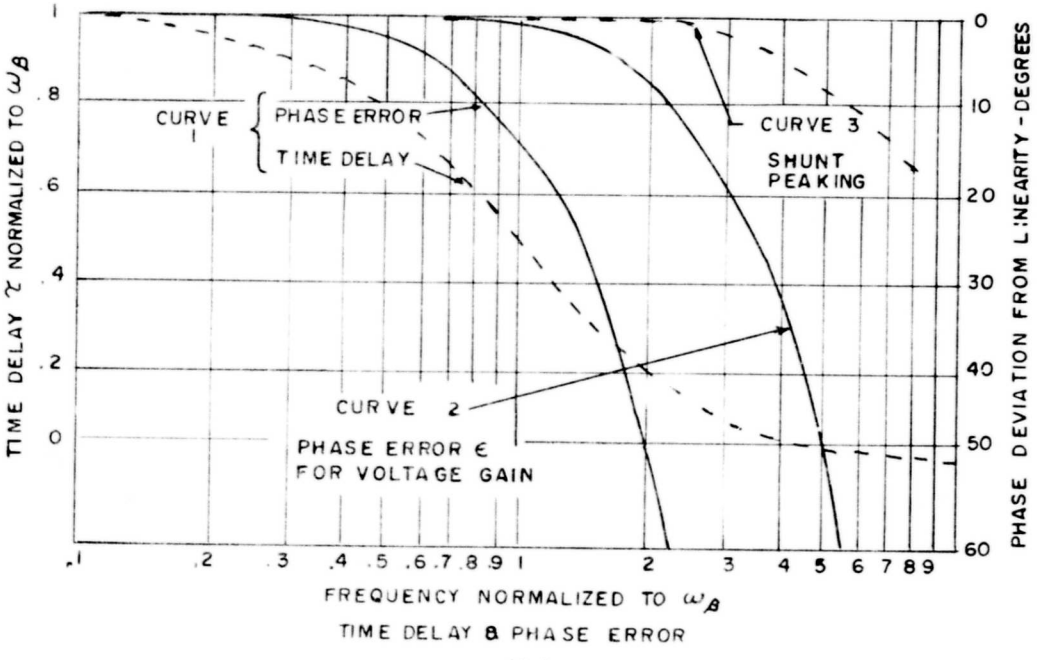

(b)

Figure 6. Theoretical Grounded Emitter Amplifier Response

Since this configuration is a current amplifier, the ideal driving source is a current generator in which R_S approaches infinity. Being a current amplifier, the output current is essentially independent of load Z_L or collector signal voltage. Therefore its output characteristics are identical to those of a current generator and for optimum performance should feed a very low impedance, i.e., $R_L \rightarrow 0$.

The symbol used for such an amplifier would correspond to Figure 1(a). The "i" indicates the amplifier input is current sensitive and should be driven from a current generator. The output symbol indicates the output is a current generator. It should be recognized that, if a small purely resistive load is used, the output will thus resemble a voltage source and the symbol of Figure 1(c) would be applicable. A purely resistance load is seldom available and thus this output characteristic should be used with care.

To be more exact, the expression for the common emitters current gain from Figure 3(c) is given by[1]

$$\frac{i_c}{i_s} = \frac{R_S}{R_S + r_{bb}} \left[\frac{\beta_o}{\frac{r_{be} + r_{bb} + R_S}{R_S + r_{bb}} + j(f/f'_{\beta e})} \right] \tag{29}$$

Its 3 db bandwidth is

$$f_{3db} = f'_{\beta e} \left[\frac{r_{be} + r_{bb} + R_S}{R_S + r_{bb}} \right] \tag{30}$$

and the current gain-bandwidth f_t becomes

$$f_t = f'_{\alpha e} \left[\frac{R_S}{R_S + r_{bb}} \right] \tag{31}$$

If the amplifier is driven from a current source, we must let $R_S \rightarrow \infty$, $i_b \rightarrow i_s$. Then Equations (29), (30) and (31) reduce to that of an ideal transistor given by Equations (24), (27) and (28).

Voltage Gain

If the amplifier is driven from an ideal voltage source, the source resistance R_S would tend toward zero. However, this source resistance is seldom zero and therefore must be retained in the gain expressions. The voltage gain of Equation (29) reduces to

$$\frac{e_L}{e_S} = \frac{Z_L}{R_S + r_{bb}} \left[\frac{\beta_o}{\frac{r_{be} + r_{bb} + R_S}{r_{bb} + R_S} + jf/f'_{\beta e}} \right] \tag{32}$$

The midband gain

$$A_{MB} = \frac{Z_L}{R_S + r_{bb} + r_{be}} \beta_o, \tag{33}$$

and the 3 db bandwidth is

$$f_{3db} = f'_{\beta e} \left[\frac{r_{be} + r_{bb} + R_S}{r_{bb} + R_S} \right] \tag{34}$$

When driven from a voltage source the symbol of Figure 1(d) would correspond to this configuration. As mentioned in a preceding section, appreciable power gain is obtainable when the current gain is unity. Therefore, the power gain-bandwidth product which is defined as the maximum frequency of oscillation f_{max} is the significant figure of merit when voltage gain is considered. That is

$$f_{max} = \text{midband voltage gain} \times f_{3db} = A_{MB} \times f_{3db} \tag{35}$$

when input and output impedances are equal. Since the actual transistor load Z_L and output load R_L can differ due to an impedance step up and down transformer, Z_L is retained. Thus

$$f_{max} = \frac{Z_L}{R_S + r_{bb}} f'_{\alpha e} \tag{36}$$

It is seen that when a voltage source is used to drive the amplifier, the presence of internal and source impedances has decreased the gain in Equation (33) but has resulted in a corresponding increase in bandwidth. Assuming a 50 ohm load and source R_S, r_{bb} = 50 ohms and r_{be} = 150 ohms, the amplifier as described by Equation (32) will have the response shown by curve 2 of Figure 6(a). Its voltage gain is seen to be 14 db below that corresponding to zero interval impedance. However, the bandwidth has been increased by a factor of 2.5. The phase error curves in Figure 6(b) are also shifted in frequency by 2.5.

It would appear from Equations (32) through (35) that the maximum voltage gain and, consequently, the power gain-bandwidth product will result if R_S and r_{bb} were minimized and the load R_L were increased. The base resistance r_{bb} of the transistor can only be reduced by the selection of a different transistor. (See reference 4 for a discussion of internal impedance variations.) At first glance, it appears that R_L should be large; however, increasing R_L produces an increase in C due to the feedback capacitance C_{bc}. Also, if R_L is increased too far the assumption that $R_L C_{bc} \gg r_{be} C$ no longer holds. These effects result in a reduced $f'_{\beta e}$.

An experiment was performed using a 2N918 transistor with a guaranteed f_t = 750 MHz to determine the point at which the collector time constant began to influence the response. The circuit shown in Figure 7 was used to obtain the transistor response shown in Figure 8. As long as the collector time constant can be neglected, the frequency response of the amplifier above f_{3db}, should drop at a rate of

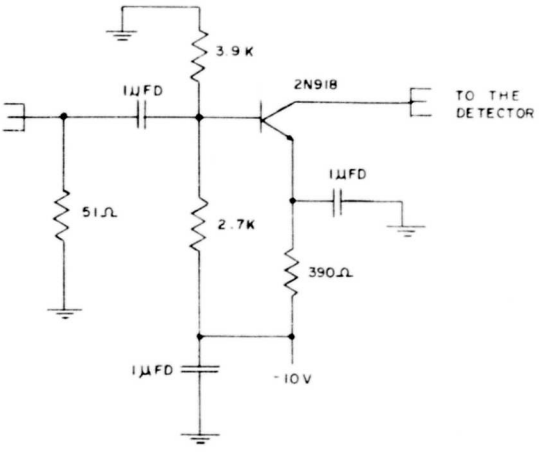

Figure 7. Common Emitter Circuit Diagram

-6 db/octave. This is seen to be the case when R_L = 50 ohms. As the collector time constant increases due to an increase in R_L, the gain response rolloff will increase to a maximum of -12 db/octave. This roll-off rate is seen to be reached when R_L = 1000 ohms.

From the measured parameters for this transistor shown at the end of this section $r_{be}C = 16 \times 10^{-9}$ sec. From the transistor data sheet, the output capacitance is given as 3 pfd. With a 50 ohm load, $R_L C_{bo} = 0.15 \times 10^{-9}$ which satisfies the assumption of Equation (7). However, when R_L = 1000 ohms, $R_L C_{bo} = 3 \times 10^{-9}$ sec. and the assumption is no longer valid.

The power gain-bandwidth product of almost any amplifier can be increased to a degree by the use of special external coupling circuits. Such circuits have been extensively examined and cataloged as to their gain-bandwidth and transient response properties.[10, 11] Several such networks will be employed in later sections to extend the response to a larger bandwidth.

As a brief example to illustrate their use, let us consider what happens when we add shunt peaking to the amplifier whose response is shown by curve 2 of Figure 6. By placing an inductance, L, in series with the load resistor R_L, the output frequency response of the amplifier can be extended. Choosing a peaking parameter, m, equal to 0.25 (zero overshoot) where

$$m = \frac{L}{R_L^2 C_{bo}} \tag{37}$$

the output voltage response is extended by a factor of 1.55. This is shown by the broken curve 3 of Figure 6(a). In the above expression C_{bo} is the collector capacitance. In addition to extending the bandwidth, the phase error or deviation from linearity is reduced by a factor of two. Increasing m to a value of 0.35 yields a slight bandwidth improvement while providing a substantial decrease in phase error. This latter value, however, produces about 3 percent overshoot. The application of such techniques is

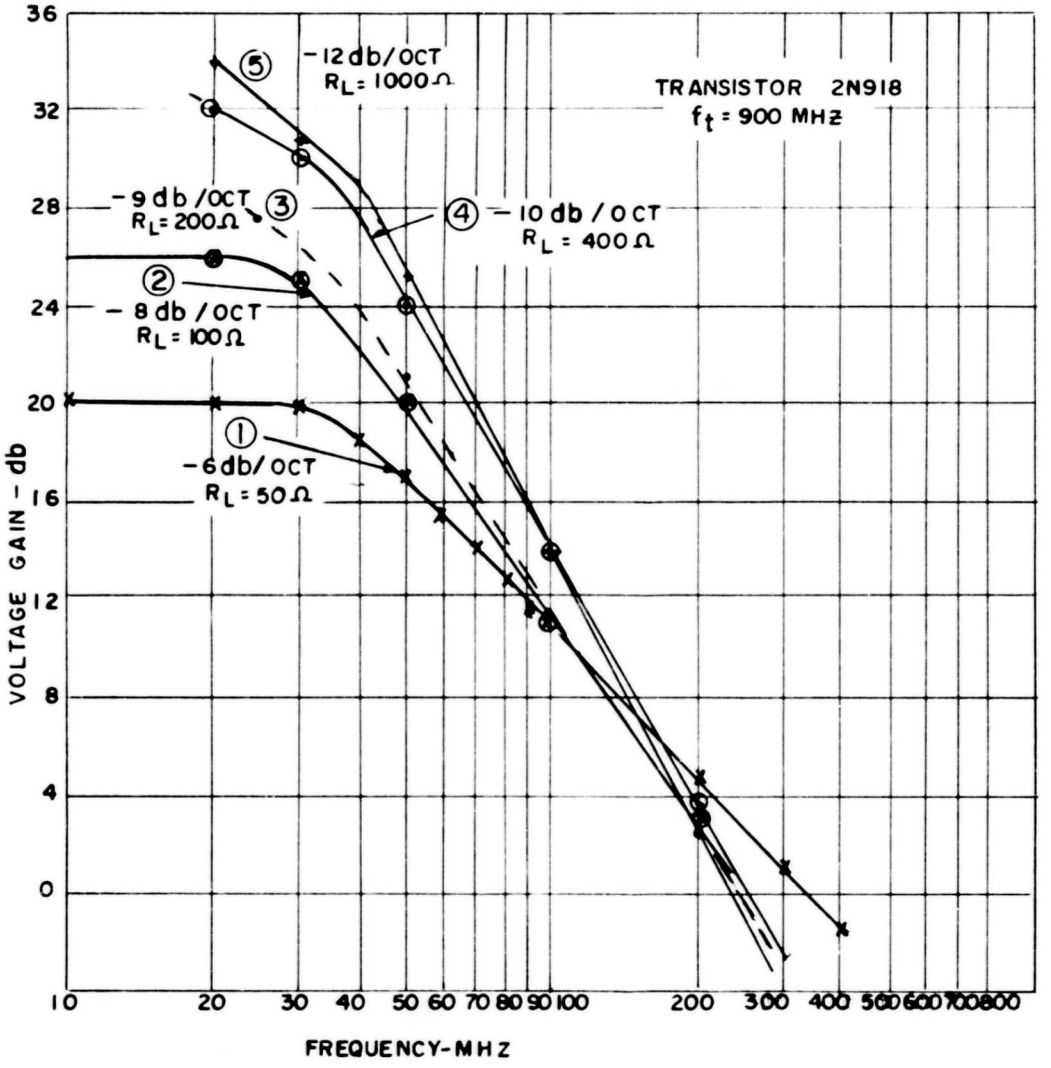

Figure 8. Experimental Grounded Emitter Amplifier Response

covered in later sections. Note that, with this compensation, the gain has dropped by only 0.5 db at $f = 2.5f_{\beta e}$ whereas, without compensation, the gain was down 3 db at this point.

Series peaking is particularly useful when feeding a load containing a shunt capacitance component. One such case is found when driving a perfectly terminated coaxial cable. The fringing effects at the input produce a small shunt capacitance that can be overcome by a series inductance.

Experimental Results

It is difficult to drive a single stage amplifier over a wideband from a current generator and properly instrument the input and output signals. It is, however, easy to obtain the voltage (or power) gain response since most generators utilize 50 ohm constant voltage outputs and 50 ohm detectors.

The power gain-frequency response of the grounded emitter amplifier of Figure 7 is shown in Figure 8 for various load impedances. The transistor used was a 2N918. The important transistor parameters were measured with a General Radio Type 1607-A Transfer-Function and Immittance Bridge. The measured parameters for the transistor used are given below.

$$\begin{aligned} f_t &= 750 \text{ MHz} \\ r_{bb} &= 33 \text{ ohms} \\ \beta_o &= 50 \\ C_{ce} &= 1 \text{ pfd} \end{aligned} \tag{38a}$$

From curve 1 ($R_L = R_S = 50$ ohms) of Figure 8 and Equation (30)

$$r_{bb} + r_{be} = 200 \text{ ohms} \tag{38b}$$

Therefore

$$r_{be} = 167 \text{ ohms} \tag{38c}$$

From Equation (34) and a measured $f_{3db} = 30$ MHz the base cutoff frequency is

$$f'_{\beta e} = 16.6 \text{ MHz} \tag{38d}$$

Due to the lack of phase measuring equipment below 200 MHz, phase and time delay information was not available. In the following sections this information is given only when the response is flat to 400 or 500 MHz.

Using the above transistor parameters in Equation (21), the maximum frequency of oscillation or the power gain-bandwidth product for this transistor is

$$f_{max} = 950 \text{ MHz} \tag{38e}$$

Although unity current gain occurs at 750 MHz, useful gain is obtainable to 950 MHz.

B. GAIN BANDWIDTH TRADE

With today's transistors having f_t and f_{max} in the gigahertz region, bandwidths greater than the common emitter beta cutoff frequency are often required. There are numerous techniques in which gain can be traded for bandwidth. In general, when the common emitter configuration is used, this trade-off can be accomplished by feeding back a portion of the output signal to the input in either a voltage or current form. Both approaches yield desirable results; however, the input-output characteristics, so important when cascading stages differ significantly, must be considered carefully.

1. Gain-Bandwidth Trade by Use of Z_L

Current Gain

If the load Z_L for the grounded emitter amplifier of Figure 3 consists of a parallel resistor R_L and inductor L, as shown in Figure 9(a), gain can be traded for bandwidth. Substituting into the approximate gain expression of Equation (3), the resultant current gain becomes

$$\beta = \frac{i_c}{i_s} \times \frac{i_L}{i_c} = \frac{j(f/f_1)\beta_o}{[1 + j(f/f_1)]\ [1 + j(f/f'_{\beta e})]} \tag{39}$$

where

$$f_1 = \frac{R_L}{2\pi L} \tag{40}$$

To be exact, Equation (29) should be used; however, as $R_S \longrightarrow \infty$ for a current source, Equation (24) would result. Equation (39) is sketched in Figure 10, curve 2 for the case where $f_1 >> f'_{\beta e}$. Curve 1 shows the amplifier's gain response if Z_L were a pure resistance, $Z_L = R_L$. The zero of the gain function causes an increase in gain with frequency until the "base" cutoff frequency $f'_{\beta e}$ is reached. Above this frequency, the zero is cancelled by one of the poles, causing the gain to remain constant at

$$A_{MB} = \beta_o \frac{f'_{\beta e}}{f_1} = \frac{f'_{\alpha e}}{f_1} \tag{41}$$

The gain remains constant until the influence of the second pole comes into play at frequency f_1. The 3 db bandwidth is thus given by

$$f_{3db} = f_1 - f'_{\beta e} \tag{42}$$

and the current gain-bandwidth product becomes

$$f_t = f'_{\alpha e}\left(1 - \frac{f'_{\beta e}}{f_1}\right) \tag{43}$$

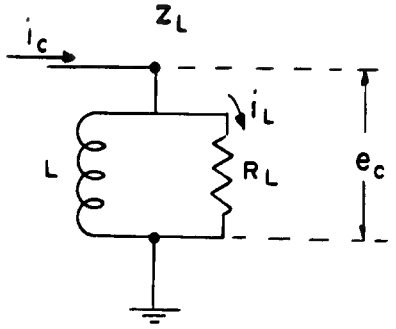

$$\frac{i_L}{i_c} = \frac{j\, f/f_1}{1 + j\, f/f_1} \qquad e_c = i_L R_L$$

$$f_1 = \frac{R_L}{2\pi L}$$

(a)

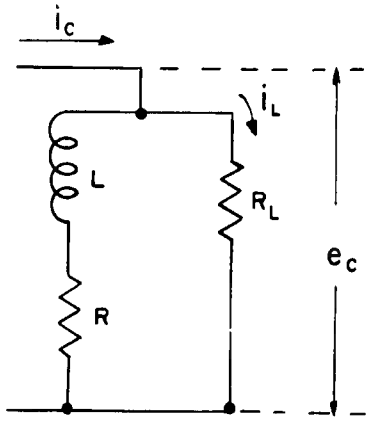

$$\frac{i_L}{i_c} = \frac{(1 + j\, f/f_2)}{1 + \frac{f_1}{f_2} + j\, f/f_2}$$

$$f_2 = \frac{R}{2\pi L}$$

(b)

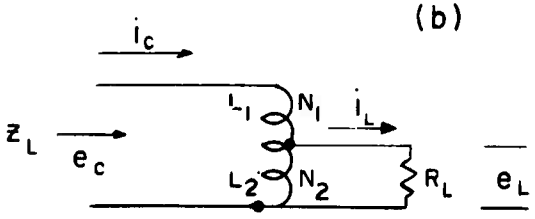

$$Z_L = \left(\frac{N_1 + N_2}{N_2}\right)^2 R_L$$

(c)

Figure 9. Load Configurations for Trading Gain for Bandwidth

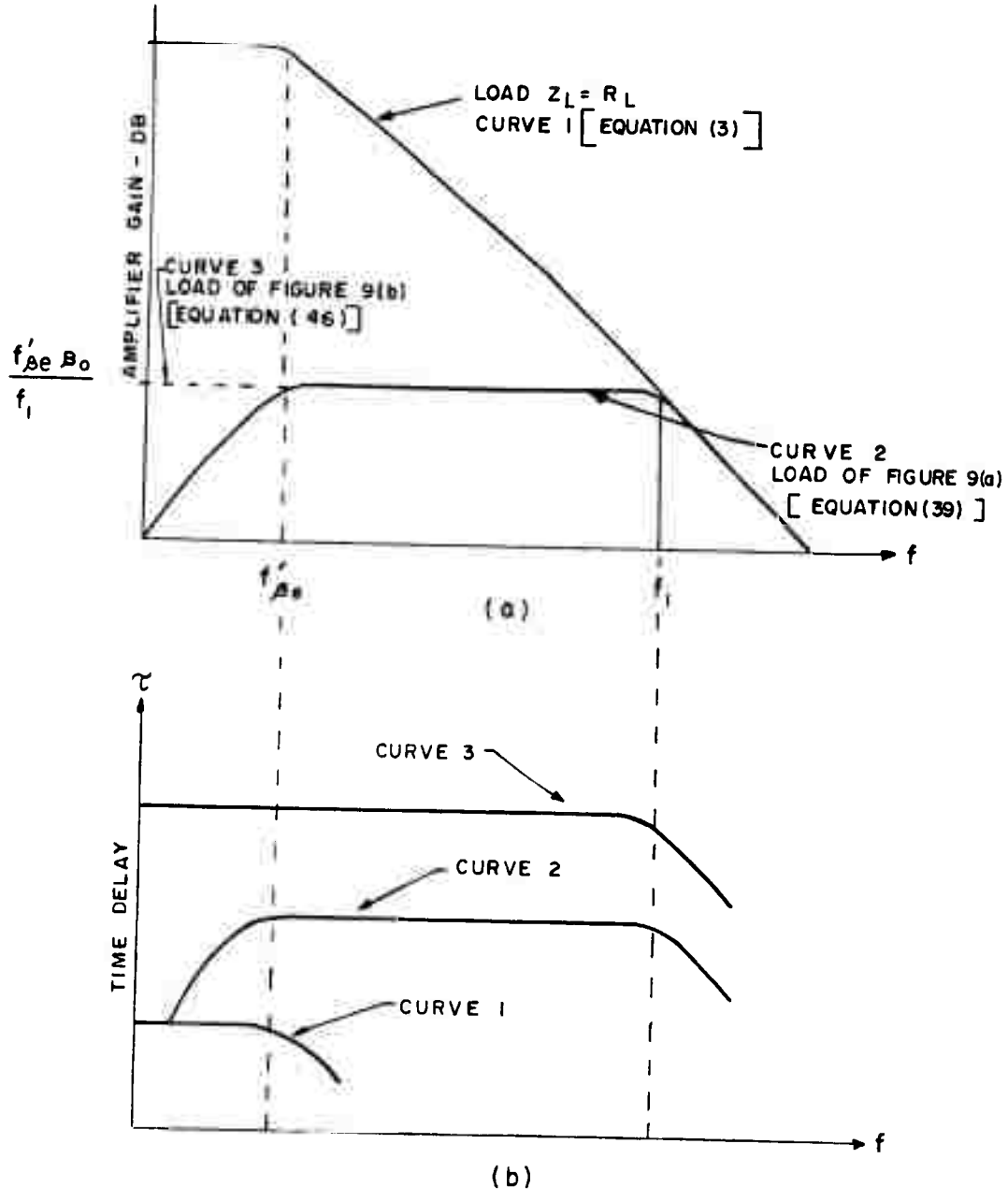

Figure 10. Theoretical Amplifier Response

Thus, as the upper cutoff frequency f_1 is increased, it is seen from Equation (41) that a corresponding decrease in midband gain results, thus affording a convenient means to trade gain for bandwidth.

The low frequency cutoff $f'_{\beta e}$ can be reduced by the insertion of a resistor in series with inductance L as shown in Figure 9(b). The gain expression is thus modified to become

$$\frac{i_L}{i_s} = \frac{(1 + jf/f_2)\beta_o}{\left[1 + j(f/f'_{\beta e})\right]\left[1 + \frac{f_1}{f_2} + j(f/f_2)\right]} \tag{44}$$

where

$$f_2 = \frac{R}{2\pi L} \tag{45}$$

In general, $f_2 \ll f_1$.

If we choose $f_2 = f'_{\beta e}$, the zero of the gain function will exactly cancel the low frequency pole to give

$$\frac{i_L}{i_s} = \frac{\beta_o}{1 + f_1/f'_{\beta e} + jf/f'_{\beta e}} \tag{46}$$

The midband gain is given by the approximate expression ($f_2 \ll f_1$).

$$\frac{i_L}{i_s} = \frac{f'_{\beta e}\,\beta_o}{f_1} \tag{47}$$

The 3 db upper cutoff frequency is

$$f_{3db} = f'_{\beta e}\,(1 + f_1/f'_{\beta e}) \doteq f_1 \tag{48}$$

The gain bandwidth product becomes

$$f_t = f'_{\beta e}\,\beta_o \doteq f'_{\alpha e} \tag{49}$$

Thus by the addition of R in series with L, the low frequency cutoff has been reduced from $f'_{\beta e}$ to zero as shown by curve 3 in Figure 10(a) without affecting the upper cutoff frequency f_1. By this method the gain-bandwidth product has been restored back to $f'_{\alpha e}$.

The time delay τ and phase error ϵ is given by

$$\tau = \frac{1}{1 + x^2} \frac{1}{(f_1 + f'_{\beta e})}$$

$$\epsilon = 57.7x \tan^{-1} x \text{ where } x = \frac{f}{(f_1 + f'_{\beta e})} \tag{50}$$

Figure 10(b) shows a sketch of the time delay response for the three cases indicated in Figure 10(a).

It is seen from expressions (47), (48) and (49) that the insertion of such a network does not alter the gain-bandwidth product, but allows a convenient method for manipulating gain and bandwidth. The addition of these networks will tend to lower the input-output characteristics of the amplifier. When operated as described here, the amplifier should be driven from a current source with the output resembling either a constant current or voltage generator, depending on the value of R and L. Its symbol would correspond to Figure 1(a) or (c).

Voltage Gain

When the amplifier is driven from a transmission line, the drive approximates a voltage generator. When driven from a voltage source, the grounded emitter amplifiers voltage gain with the parallel R_L - L load of Figure 9(a) is written from Equation (32) as

$$\frac{e_c}{e_s} = \frac{Z_L}{R_S + r_{bb}} \frac{j\,\beta_o(f/f_1)}{\left[\frac{r_{be} + r_{bb} + R_S}{r_{bb} + R_S} + j\,(f/f'_{\beta e})\right]\left[1 + j\,(f/f_1)\right]} \tag{51}$$

The midband gain becomes

$$A_{MB} = \frac{f_{\alpha e}\, Z_L}{f_1\,[R_S + r_{bb}]} \tag{52}$$

and the 3 db bandwidth

$$f_{3db} = f_1 - f'_{\beta e}\left[\frac{r_{be} + r_{bb} + R_S}{r_{bb} + R_S}\right] \tag{53}$$

The addition of R in series with inductance L as shown in Figure 9(b) alters the voltage gain to

$$\frac{e_c}{e_s} = \frac{Z_L}{R_S + r_{bb}} \frac{\beta_o \left[1 + j\,(f/f_2)\right]}{\left[\dfrac{r_{be} + r_{bb} + R_S}{r_{bb} + R_S} + j\,(f/f'_{\beta e})\right]\left[1 + f_1/f_2 + j\,(f/f_2)\right]} \tag{54}$$

Adjusting f_2 to the value

$$f_2 = f'_{\beta e}\left[\frac{r_{be} + r_{bb} + R_S}{R_S + r_{bb}}\right] \tag{55}$$

allows the zero to cancel the $f'_{\beta e}$ pole and to yield a voltage gain that is flat from zero to about the 3 db upper cutoff frequency. The gain function reduces to

$$\frac{e_c}{e_s} = \frac{Z_L}{R_S + r_{be} + r_{bb}} \frac{\beta_o}{\left[1 + f_1/f_2 + j\,(f/f_2)\right]} \tag{56}$$

The midband gain becomes

$$A_{MB} = \frac{Z_L}{R_S + r_{bb}} \frac{f'_{\alpha e}}{f_1 + f_2} \tag{57}$$

and the 3 db bandwidth

$$f_{3db} = f_1 + f_2 \tag{58}$$

The resultant power gain-bandwidth, f_{max}, is

$$f_{max} = \frac{Z_L}{(R_S + r_{bb})} f'_{\alpha e} \tag{59}$$

so that the maximum power gain-bandwidth product will result by making R_L as large as possible and $R_S + r_{bb}$ as small as possible.

A convenient technique for effecting an impedance change when low coaxial impedances are used is by use of the auto transformer shown in Figure 9(c). The impedance transformation, assuming no leakage, is given by

$$Z_L = \left(\frac{N_1 + N_2}{N_2}\right)^2 R_L \tag{60}$$

where N_1 and N_2 are the number of turns used on each half of the coil. Because of leakage, each half of the auto transformer will have an induction associated with it. The inductance L_2 can thus be used as the parallel load inductance. Also, since most loads, particularly input loads to coax, will have some shunt capacitance associated with it, the inductance L_1 can be adjusted to provide series peaking. In general, the adjustment of the tap and total number of turns for optimum performance is obtained experimentally.

If we assume an ideal auto transformer, that has no leakage, the midband gain of Equation (57) is modified to

$$A_M = \frac{e_L}{e_s} = \frac{R_L}{R_S + r_{bb}} \left(\frac{N_1 + N_2}{N_2}\right)^2 \frac{f'_{\alpha e}}{f_1 + f_2} \tag{61}$$

The power gain-bandwidth product as given by Equation (59) is modified to be

$$f_{max} = f'_{\alpha e} \left(\frac{N_1 + N_2}{N_2}\right)^2 \frac{R_L}{R_S + r_{bb}} \tag{62}$$

A further refinement may be obtained by the addition of resistor R in series with L_2. The result is to boost the low frequency gain as was the case in Figure 10(b) and thus obtain a flat response from zero to the cutoff frequency.

In practice the gain and bandwidth are considerably below that predicted by Equations (61) and (62) due to the leakage inductance which reduces the transformation ratio.

The high frequency 4:1 impedance transformer of Ruthroff[9] could be inserted between the transistor and loads of Figure 9(a) and (b) to effect an increase in Z_L.

An increase in the power gain-bandwidth product can be obtained by the use of special coupling networks.

Experimental Results

The grounded emitter amplifier of Figure 7 was tested to obtain its response utilizing the loads of Figure 9. Curves 1 and 2 of Figure 11 were obtained using the load of Figure 9(a) with L = 0.03 μhy ($f_1 \doteq 260$ MHz) and L = 0.06 μhy ($f_1 \doteq 131$ MHz) respectively. Note that in curve 1, the two break points were quite close together thus producing a broad rounded response. For curve 2 the two break points were more widely separated, thus yielding a flat response between break points.

From curve 2, f_1 and f_2 are measured as

$$f_1 = 370 \text{ MHz}$$

$$f_2 = f'_{\beta e} = 28 \text{ MHz}$$

which indicated that L = 0.021 μhy (microhenries). Utilizing the parameters of

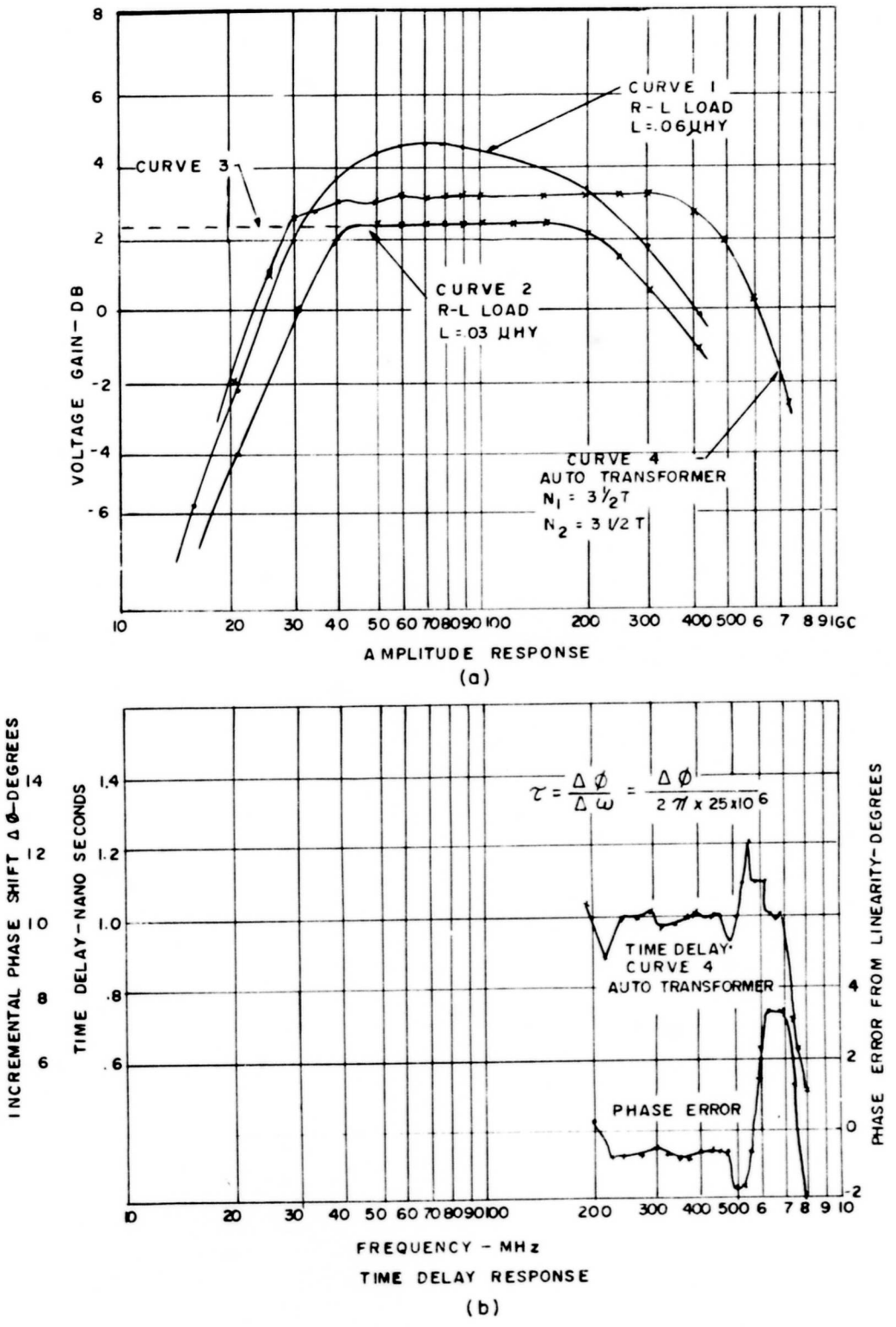

Figure 11. Experimental Grounded Emitter Amplifier Response With R-L and Auto Transformer Loads

Equation (38), Equation (52) predicts a midfrequency gain of 1.7 db as compared with the measured results of 2.2 db. The discrepancy is due to the uncertainty in r_{bb} and $f'_{\alpha e}$. Due to the low gain we have assumed $f'_{\alpha e} = f_{\alpha e} = f_t$.

A resistance, R = 5 ohms as predicted by Equation (45), was placed in series with the load inductance L. As predicted, the low frequency response was reduced to well below 10 MHz as indicated by curve 3. By varying the value of R, the low frequency response can be made to increase or decrease as the frequency goes down. Utilizing curve 3, the power gain-bandwidth product is calculated as

$$f_{max}\Big|_{meas} = 370 \times 1.27\ (2.1\ \text{db}) = 470\ \text{MHz}$$

Equation (59) predicts

$$f_{max}\Big|_{theor} = 435\ \text{MHz}$$

which is well within the measured tolerances.

An auto transformer like that shown in Figure 9(c) having seven turns was placed between the transistor and load R_L of Figure 7. The tap was adjusted by viewing the amplifier's response when driven from a sweep generator. The best tap location for this coil was found to be 3-1/2 turns from the ground end. Curve 4 of Figure 11 shows that a gain of about 3 db was obtained from 40 MHz to 350 MHz with the 3 db points located at 23 and 600 MHz. This yields a measured power gain bandwidth product of

$$f_{max}\Big|_{meas} = 577 \times 1.414 = 833\ \text{MHz}$$

Assuming an ideal auto transformer, Equation (62) predicts a gain-bandwidth of

$$f_{max}\Big|_{theor} = 875\ \text{MHz}$$

The discrepancy between the measured and calculated gain and f_t is due to the leakage inductance. This leakage inductance is thus utilized as the shunt load inductance and possible series peaking of the load. The low frequency end of the response drops at a 6 db/octave rate. The insertion of resistance in series with L_2 would raise the low frequency response. The high frequency response drops at a 12 db/octave rate indicating the presence of series peaking.

The time delay and phase error response of the amplifier with the auto transformer was measured and is shown in Figure 11(b). The equipment used to obtain the phase or delay response was the Rantec phase measurement system Model ET-110U that covers from 200 to 1000 MHz. The delay response was obtained by varying the frequency in 25 MHz increments and plotting the resultant phase change. The phase error is very small until 500 MHz which is roughly the 2 db point on the amplitude response.

2. Gain-Bandwidth Trade by Use of Feedback

a. Emitter (Series) Feedback

The addition of an emitter resistor as shown in Figure 12 to effect voltage feedback in order to reduce gain and thus increase bandwidth is suggested from Equations (32) and (34). Here it is seen that when the grounded emitter amplifier is driven from a voltage source, the presence of an internal emitter resistance r_{be} has caused the amplifier's midband gain to be reduced and the bandwidth increased. Thus the addition of an external emitter resistance would simply increase the effective value of r_{be} and enable one to control gain and bandwidth. The presence of such an element provides a feedback voltage proportional to the amplified emitter signal current.

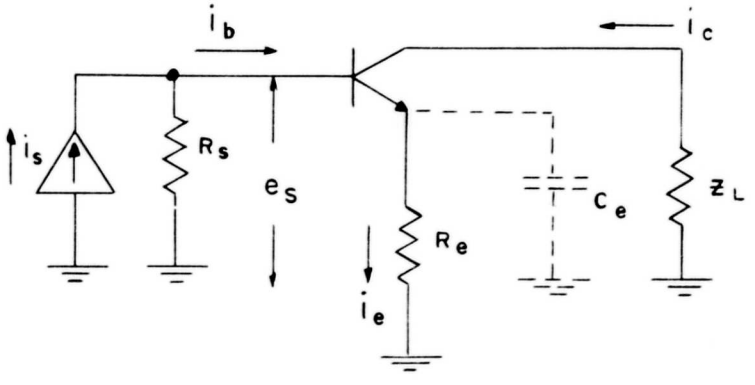

(a)

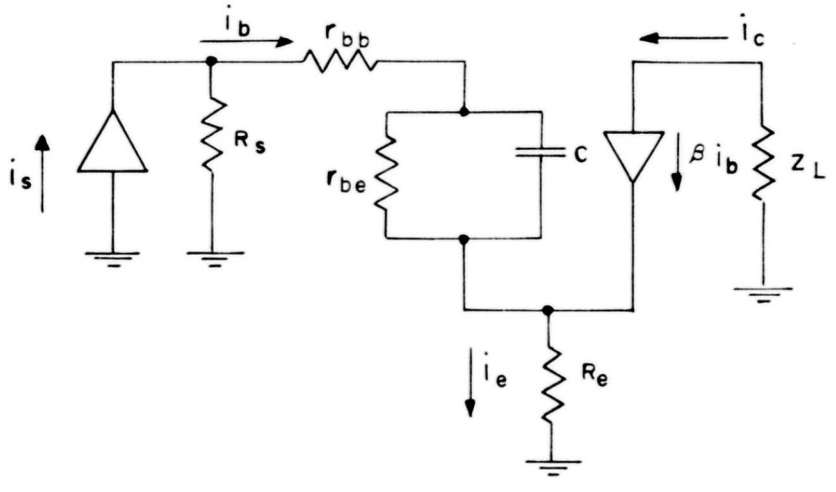

(b)

Figure 12. Emitter Feedback Equivalent Circuit

The amplifier and equivalent circuit obtained by adding an external emitter resistance, R_e, to the grounded emitter amplifier of Figure 3(a) is shown in Figure 12.

To realize its optimum performance, this configuration must be driven from a voltage generator. Its output, in general, resembles a current source. Thus, the symbol of Figure 1(d) would correspond to this configuration. The voltage gain as derived from the equivalent circuit is given by[1]

$$\frac{e_c}{e_s} = \frac{Z_L}{R_S + r_{bb} + R_e} \frac{\beta_o}{\dfrac{R_S + r_{be} + r_{bb} + (1 + \beta_o) R_e}{R_S + r_{bb} + R_e} + j\,(f/f'_{\beta e})} \tag{63}$$

Note that this expression degenerates to that of the grounded emitter case, given by Equation (32), as R_e approaches zero. The midband gain is given by

$$A_{MB} = \frac{Z_L\,\beta_o}{R_S + r_{bb} + r_{be} + (1 + \beta_o) R_e} \tag{64}$$

If $(1 + \beta_o) R_e >> R_S + r_{bb} + r_{be}$, then

$$A_{MB} \doteq Z_L/R_e. \tag{65}$$

The 3 db bandwidth is

$$f_{3db} = f'_{\beta e} \left[\frac{R_S + r_{be} + r_{bb} + (1 + \beta_o) R_e}{R_S + r_{bb} + R_e} \right] \tag{66}$$

It is seen that a gain-bandwidth trade is possible by manipulating the value of R_e. The resultant power gain-bandwidth product becomes

$$f_{max} = \frac{Z_L}{R_S + r_{bb} + R_e} f'_{\alpha e} \tag{67}$$

which decreases as R_e is increased. In practice R_e is less than $R_S + r_{bb}$(R_e = 20ohms) and the reduced f_{max} is not too significant.

Using the transistor parameters listed at the end of Section II, Equation (38) and R_e = 22 ohms, the amplifier's theoretical frequency response as given by Equation (63) is plotted as curve 1 in Figure 13(a). The theoretical midband gain is 5.2 db and a 3 db bandwidth of 190 MHz. From Equation (67), the theoretical f_{max} = 365 MHz. The experimental results obtained from the 2N918 transistor whose parameters are given by Equation (38) is plotted as the broken curve 2, Figure 13(a). The circuit configuration used for these measurements is shown in Figure 13(b). The actual midband gain was measured at 5 db with f_{3db} of 260 MHz. The larger 3 db

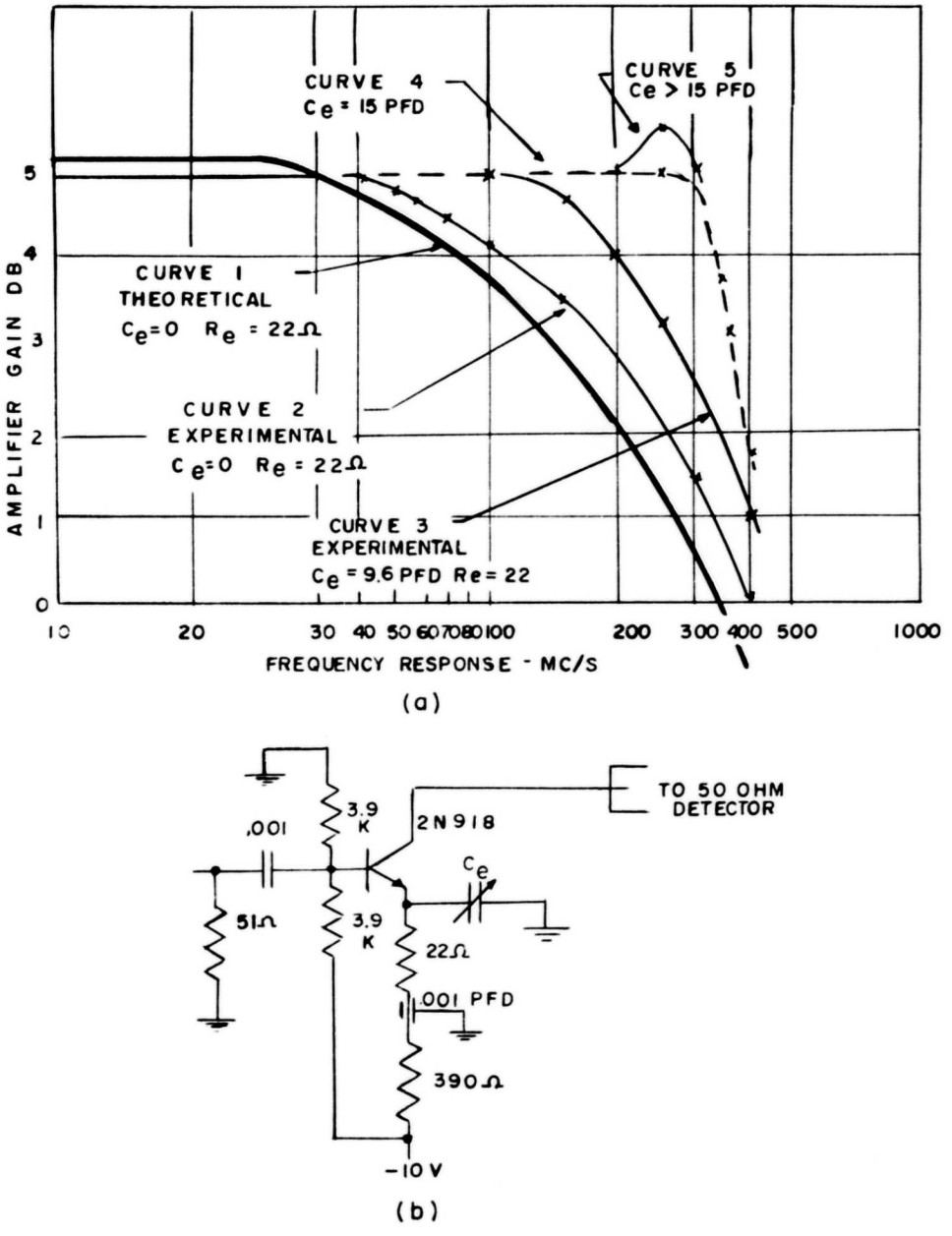

Figure 13. Amplifier Response With Emitter Feedback

bandwidth obtained by the experimental setup is probably due to stray capacitance that shunts the emitter resistance R_e. The measured power gain-bandwidth f_{max} = 465 MHz.

It is interesting to note that if this configuration were driven from a current source, i.e., $R_S \longrightarrow \infty$, the amplifier is reduced back to the uncompensated current amplifier with an increased gain of β_o but correspondently reduced bandwidth of $f'_{\beta e}$.

Joyce and Clark[1] have shown that connecting a capacitance C_e across R_e yields a bandwidth improvement by boosting the high frequency gain without affecting the low frequency gain. Changing R_e to the impedance

$$Z_e = \frac{R_e \omega_e}{1 + \omega_e} \tag{68}$$

where

$$\omega_e = \frac{1}{R_e C_e}$$

the gain expression can be written in the form

$$\frac{e_c}{e_s} = \frac{Z_L}{R_S + r_{bb}} \frac{\omega'_{\alpha e}(p + A)}{p^2 + pB + D} \tag{69}$$

where

$$A = \omega_e \tag{69a}$$

$$B = \omega'_{\beta e}\left(\frac{1 + r_{be}}{R_S + r_{bb}}\right) + \omega_e\left(\frac{1 + R_e}{R_S + r_{bb}}\right) \tag{69b}$$

$$D = \omega'_{\beta e}\omega_e\left[\frac{r_{be} + r_{bb} + R_S + R_e(1 + \beta_o)}{R_S + r_{bb}}\right] \tag{69c}$$

Here it has been assumed that $R_S + r_{bb} << \dfrac{1}{\omega C_{bc}\left(1 + \dfrac{R_L}{R_e}\right)}$

The midband gain is

$$A_{MB} = \frac{Z_L}{R_S + r_{bb}} \frac{\omega'_{\alpha e} A}{D} \tag{70}$$

In general, we either design an amplifier with a given midband and try to optimize the bandwidth or work with a given bandwidth in an effort to optimize the gain. To determine, from these expressions, the value of C_e for a desired response when R_e is an arbitrary value is extremely difficult. Probably the simplest approach is by the use of Bode plots, in both phase and amplitude.

There are, however, several special cases where it can be seen that the addition of C_e has boosted the high-frequency gain. In general, the problem is to manipulate the poles and zeros in Equation (69) to yield the desired response.

As suggested by Joyce and Clark, one possibility with the pole-zero pattern is to set $B = A + D/A$, which places the zero at the top of one of the poles and leaves the remaining pole at $-D/A$.

For this case Equation (69) reduces to

$$\frac{e_c}{e_s} = \frac{Z_L}{R_S + r_{bb}} \frac{\beta_o}{\dfrac{r_{be} + r_{bb} + R_S + R_e(1 + \beta_o)}{R_S + r_{bb}} + j\,(f/f'_{\beta e})} \tag{71}$$

where

$$\omega_e = \omega'_{\alpha e}$$

$$A_{MB} = \frac{Z_L \beta_o}{r_{be} + r_{bb} + R_S + R_e(1 + \beta_o)} \tag{72}$$

Thus

$$f_{3db} = f'_{\beta e}\left[\frac{r_{be} + r_{bb} + R_S + R_e(1 + \beta_o)}{R_S + r_{bb}}\right] \tag{73}$$

and the gain-bandwidth product is

$$f_{max} = \frac{Z_L}{R_S + r_{bb}} f'_{\alpha e} \tag{74}$$

which is now independent of R_e.

Using a 2N918 transistor having the parameters given by Equation (63), $R_e = 22\Omega$ and $C_e = 9.6$ pfds as predicted by Equation (72), the theoretical amplifier response will extend the 3 db bandwidth to 240 MHz. Curve 3 gives the experimental results obtained with $C_e = 9.6$ pfd. The 3 db bandwidth obtained was 330 MHz. Again the discrepancy in the theoretical and measured bandwidths is probably due to the uncertainty in C_e. The measured power gain-bandwidth $f_{max} = 590$ MHz.

The time delay, τ, and phase error ϵ, are given by

$$\tau = \frac{1}{1 + f/f3db} \frac{1}{2\pi f3db} \quad ; \quad \epsilon = 57.7\ f/f3db - \tan f/f3db. \tag{75}$$

Comparing the bandwidth expressions for $C_e = 0$ (Equation 66), and for $C_e = \omega'_{\alpha e}/R_e$ (Equation 73), it can be seen that the bandwidth has been increased by a slight amount (190 MHz to 240 MHz).

Although the 3 db bandwidth has been increased by the addition of C_e, as predicted by Equation (73), the flatness of the amplitude, i.e., the 0.5 db points, or phase response has not been optimized. The condition for maximal flatness is satisfied when[1] the coefficients of Equation (69) satisfy the relationship

$$B^2 = \left(\frac{D}{A}\right)^2 + 2\left(\frac{D}{A}\right)A \tag{76}$$

The condition for a maximally linear phase function, (derivation in Appendix I) is given by the relationship

$$A^3 = \frac{D^2}{3B - B^3/D} \tag{77}$$

In general, the ratio D/A can be determined, Equations (69a) and (c). Thus to determine the value of C_e for maximal flatness, Equation (76) must be combined with Equations (69a) and (b) and solved. Even this is not easy since the substitution of Equations (69a) and (b) into (76) yields a quadratic in ω_e. Generally, the most expedient approach is by experimentation, since, in the end, the final value of C_e must be adjusted experimentally. The use of Bode plots can often shed much light on the mechanism involved here.

Another special case where the mathematics drops out is the simultaneous maximization of the gain-bandwidth product and the maximal flatness.[1] This condition is obtained by adjusting the emitter impedance so as to place both poles of Equation (69) at $-\sqrt{2A}$. This requires that

$$B = 2\sqrt{2A} \text{ and } D = 2A^2 \tag{78}$$

where

$$A = \omega_e$$

This is just the condition where Equation (69) is critically damped.

The gain thus reduces to

$$\frac{e_c}{e_s} = \frac{Z_L}{R_S + r_{bb}} \frac{f'_{\alpha e}}{f_e} \frac{(1 + jf/f_e)}{(\sqrt{2} + jf/f_e)^2} \tag{79}$$

The midband gain is

$$A_{MB} = \frac{R_L f'_{\alpha e}}{(R_S + r_{bb})2f_e} \tag{80}$$

and

$$f_{3db} = 2.2f_e \tag{81}$$

to yield

$$f_{max} = \frac{R_L}{R_S + r_{bb}} 1.1f'_{\alpha e} \tag{82}$$

It can be shown that f_e here is equal to one half the 3 db bandwidth given by Equation (73). The time delay through this amplifier is given by

$$\tau f_e = \frac{1}{1 + (x)^2} - \frac{\sqrt{2}}{1 + \left(\frac{x}{\sqrt{2}}\right)^2} = 0.414 \frac{1 + 2.2x^2}{1 + 1.5x^2 + \frac{x^4}{2}} \tag{83}$$

where

$$x = f/f_e$$

For maximal phase linearity the coefficients of x^2 should be equal. It is seen that this condition is being approached and thus the phase response for this amplifier would be expected to be extremely linear. The phase deviation from linearity, ϵ, is

$$\epsilon = 57.7x + \tan x - 2 \tan x/\sqrt{2} \tag{84}$$

Thus, by simultaneously adjusting for maximum and maximal flatness, f_{max} has been increased by 1.1. Although the 3 db point has been increased by only a small amount, the 0.5 db response has been increased by a considerable degree. In addition the phase linearity has been improved also.

The value of C_e is determined from Equations (69c) and (76) as

$$C_e = \frac{2}{\omega_{\beta e} R_e} \left[\frac{R_S + r_{bb}}{r_{be} + R_S + r_{bb} + R_e(1 + \beta_o)} \right] \tag{85}$$

The determination of R_e to satisfy Equation (77) is not as simple. By using Equations (77) and (69 b and c) the term ω_e is eliminated. The result is a quadratic in R_e of the form

$$R_e^2 - jR_e + K = 0 \tag{86}$$

where

$$J = (2\sqrt{2} - 1)(R_S + r_{bb}) - \frac{(r_{be} + R_S + r_{bb})}{1 + \beta_o} \tag{87a}$$

$$K = \frac{(3 - 2\sqrt{2})\ (r_{be} + R_S + r_{bb})\ (R_S + r_{bb})}{1 + \beta_o} \tag{87b}$$

Solving for the emitter resistance

$$R_e = + \frac{J \pm \sqrt{J^2 - 4K}}{2} \tag{88}$$

If $4K << J^2$ then

$$R_e = + \frac{K}{J} \text{ or } + J - \frac{K}{J} . \tag{89}$$

From midband gain consideration, the first value is the desired one; that is

$$R_e = K/J. \tag{90}$$

For most high frequency transistors Equation (89) yields a small value, i.e., $R_e = 1 \longrightarrow 8$ ohms which produces a fairly high gain and a narrow bandwidth.

For example, with the transistor parameters of Equation (63), Equation (90) predicts $R_e = 1.3$ ohms, $C_e = 0.0044$ ufd, which yields a midband gain of 16.7 db from Equation (80) and a 3 db bandwidth of 66 MHz from Equation (81). From Equation (67), the 3 db bandwidth without C_e would be 56 MHz. Although we have maximized the gain-bandwidth along with maximal flatness condition, we have restricted the bandwidth of this circuit rather seriously.

Higher bandwidth can be obtained without loss in f_t by increasing R_e to yield the desired midband gain and then adjusting C_e for maximal flatness as predicted by the use of Equations (69) and (76). However, this is far easier to accomplish experimentally. For this reason we shall not consider the problem further except to indicate the increased responses obtained from an experimental amplifier. Curve 4 of Figure 13(a) shows the frequency response when C_e is adjusted to give the maximum flatness amplitude response. Although the 3 db point has only been extended from 340 MHz to about 400 MHz, the 0.5 db response has been extended from 165 MHz to 320 MHz. Curve 5 indicates the high frequency peaking that occurs when C_e is increased beyond that necessary for maximal flatness. The measured power gain-bandwidth product $f_{max} = 710$ MHz. The theoretical maximum power gain-bandwidth product as given by Equation (21) is 950 MHz for this transistor ($C_{bc} = 1$ pfd, $r_{bb} = 33$ ohms, $f_t = 750$ MHz).

Joyce and Clarke[1] have pointed out the use of a series inductance in series with C_e. The emitter impedance then goes to zero at the L-C resonant frequency producing a peak in the amplifier response. A parallel resonant L-C circuit could also be used in place of Z_e, thus producing a null in the response.

The gain-bandwidth of the amplifier can be increased by the use of more sophisticated load circuits.

Load Consideration

The comments and experimental results of Section II.B.1. about raising f_{max} through manipulation of Z_L are applicable here. Namely, Z_L cannot be increased without limit as was indicated in Figure 13. An auto transformer like that shown in Figure 9(c) could be used to increase f_{max}. Although the self inductance of L_1 would yield some series peaking, the shunting inductance of N_2 would reduce the effectiveness of such an approach.

An impedance transformer suitable for increasing the amplifier's load impedance can be obtained by using broadband transformers like those described by C.L. Ruthroff[9]. The particular transformer useful in this case is the 4:1 impedance transformer shown in Figure 14, which is wound on a high quality ferrite torroid to form a transmission line. Ruthroff obtained over 700 MHz bandwidth at the 3 db points with the lower cutoff at 200 KHz. When this transformer is used into a 50 ohm line, Z_L of Equations (63) through (81) becomes equal to 200 ohms. Figure 15(a) shows the amplifier's response when used with the impedance transformer of Figure 14. Figure 15(b) shows the complete circuit. Curve 1 was obtained with the emitter resistor R_e = 22 ohms and C_e adjusted for maximum flatness. A gain of 9.7 db was obtained with a 3 db bandwidth of 325 MHz which yields an f_{max} = 985 MHz as compared to a theoretical maximum of 950 MHz as calculated from Equation (21). In order to reduce the gain and extend the bandwidth, R_e was increased to 47 ohms. The resultant gain response is shown by curve 2 of Figure 15. Here the addition of C_e had negligible effect. A gain of 3.5 db with f_{3db} = 510 MHz for an f_{max} = 763 MHz. In general, for highest f_{max}, R_e should be kept small. See Figure 17 for R_e = 33 ohms.

The addition of a small inductance, L, between the transformer and collector, as well as an adjustable capacitance across the transformer output as shown in Figure 16, when adjusted for maximum flatness, will extend the 0.5 db responses of curve 2 as shown by the dashed line, curve 3. Such an adjustment has little effect when R_e = 22 ohms. With this addition the gain-bandwidth product is raised to f_t = 830 MHz. The flat response has been considerably extended.

A detailed analysis of such load variations would be purely academic and serve little purpose since, in the end, most adjustment must be made experimentally. It is felt that the derivation of equations describing the basic amplifier configuration with load Z_L is sufficient to understand and predict its general design and behavior. Various load and emitter impedance configurations would strive to increase the impedance seen by the transistor or shape the amplifier response in order to take the maximum advantage of its characteristics, i.e., maximize f_{max}.

As a last load configuration, and possibly the simplest, series peaking is used to extend the gain response. Here an inductance L is placed in series with the load R_L. As shown in Figure 17(b), generally the load will have some capacitance shunting it. Series peaking is discussed in considerable detail in references 10 and 11. Only the experimental results of its use are given here. The response of a series peaked emitter feedback amplifier, adjusted for maximum flatness, is shown in Figure 17(a). From this graph, a power gain bandwidth product of f_{max} = 935 MHz was obtained. The phase response of this amplifier is also shown in Figure 17(a).

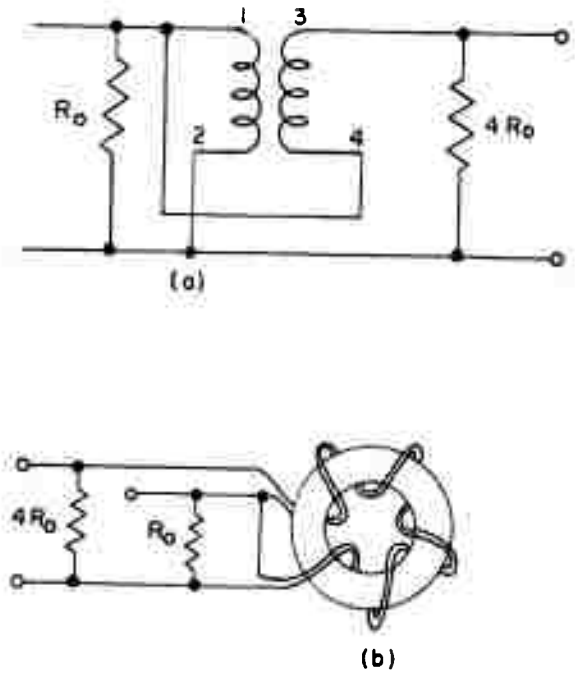

Figure 14. Wiring Diagram for 4:1 Impedance Transformer

b. Collector (Shunt) Feedback

Another technique useful in trading gain for bandwidth is the use of collector to base feedback as shown in Figure 18 along with its equivalent circuit. This technique, known as current feedback, has its maximum effectiveness when the amplifier is driven from a current source. Its output characteristics resemble a constant voltage source due to the feedback.

If the internal impedances of the transistor are neglected and the signal generator is considered to be a current source ($R_S \longrightarrow \infty$), the gain of the amplifier can be written, when $Z_f = R_f$ and $Z_L = R_L$, as

$$\frac{i_L}{i_S} = \frac{\alpha}{1 - \alpha + \frac{R_L}{R_f}} = \frac{R_f}{R_f + R_L}\left[\frac{\beta_o}{\frac{\beta_o R_L + R_f}{R_L + R_f} + j\,(f/f'_{\beta e})}\right] \tag{91}$$

If the amplifier were driven by a voltage source, the feedback effect would be negligible and the response would be that of a ground emitter amplifier without feedback. The presence of feedback from collector to base greatly reduces the

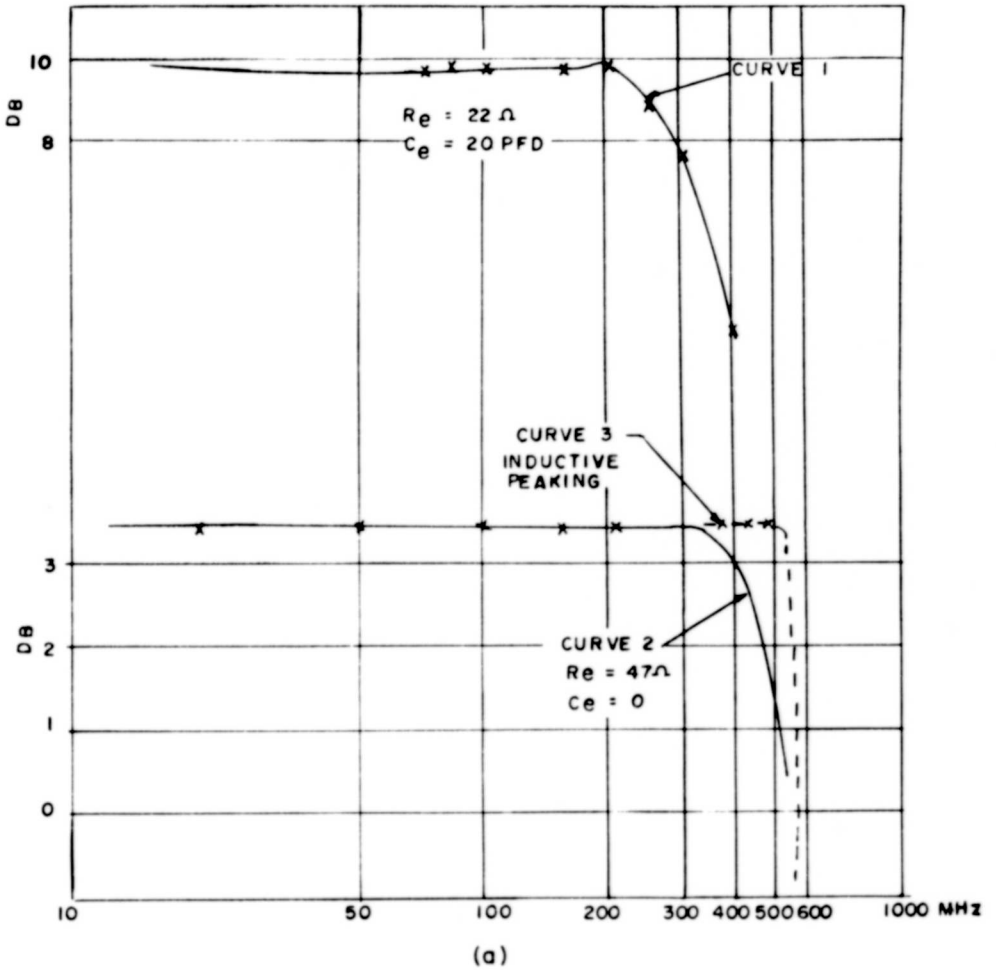

(a)

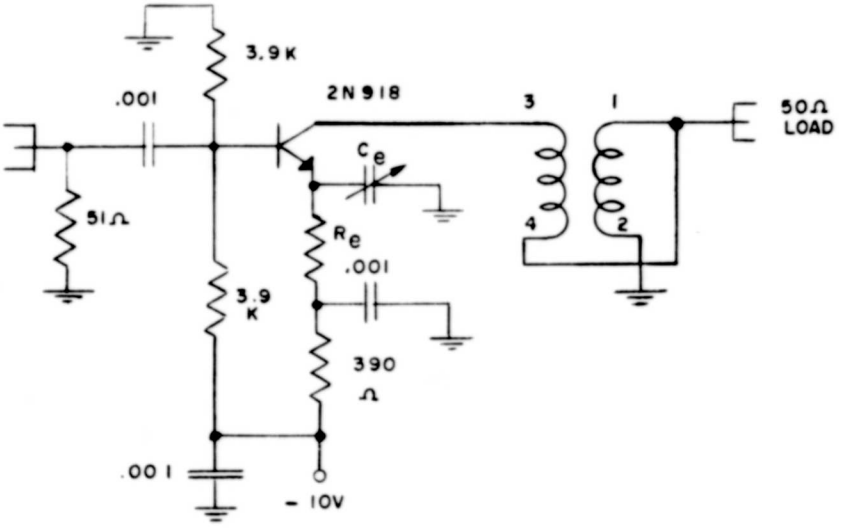

(b)

Figure 15. Emitter Feedback Circuit and Response Using a Wideband Transformer

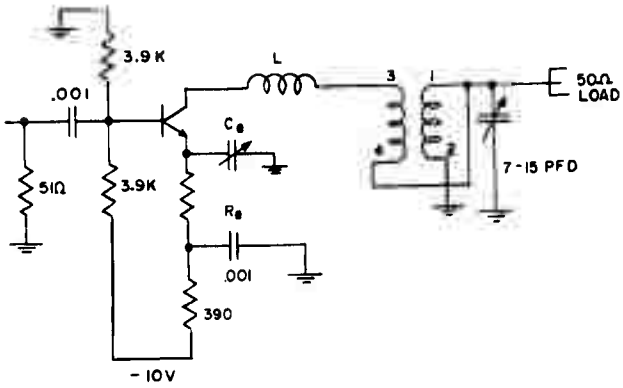

Figure 16. Emitter Feedback and Wideband Transformer With Inductive Peaking Added

amplifier's output impedance. For this reason, the output characteristics of the amplifier resemble a constant voltage source and thus the transfer function should be written in terms of e_L/i_S. The symbol for such an amplifier configuration would correspond to that of Figure 1(c).

The midband gain from Equation (91) is

$$\frac{i_L}{i_S} = \frac{R_f}{\beta_o R_L + R_f} \beta_o \doteq \frac{R_f}{R_L} \tag{92}$$

and the 3 db bandwidth occurs at

$$f_{3db} = f'_{\beta e} \frac{\beta_o R_L + R_f}{R_L + R_f} . \tag{93}$$

The current gain-bandwidth product reduces to

$$f_t = f'_{\alpha e} \frac{R_f}{R_L + R_f} . \tag{94}$$

Again we find f_t has been reduced from $f'_{\alpha e}$ by the presence of the feedback impedance, R_f. As in the previous case, the bandwidth can be extended by removing the feedback at high frequencies. In this case, a series inductance will increase the feedback impedance with frequency. Thus, if[1]

$$Z_f = pL + R, \quad \omega_f = R_f/L, \quad \omega_L = R_L/L,$$

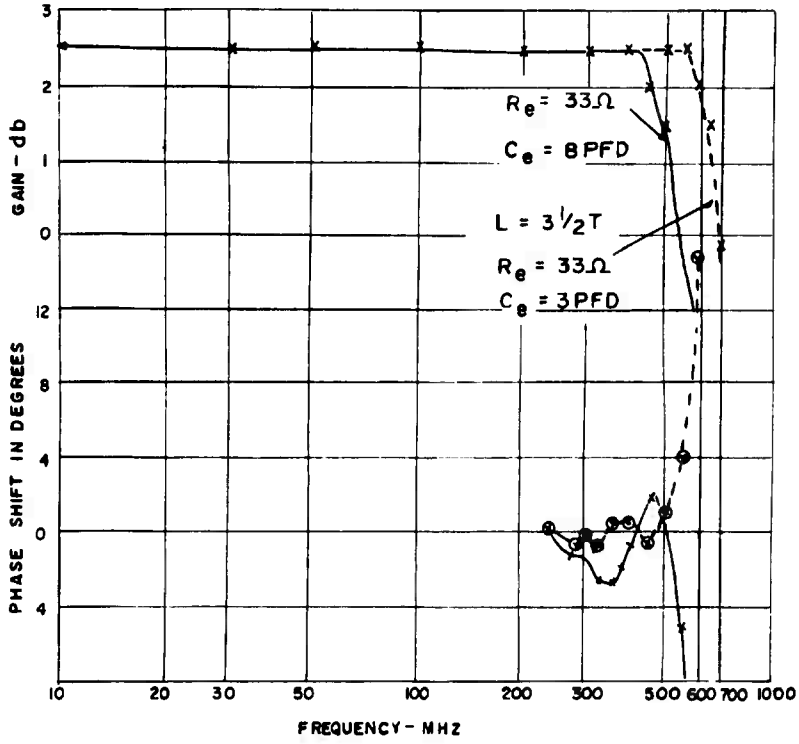

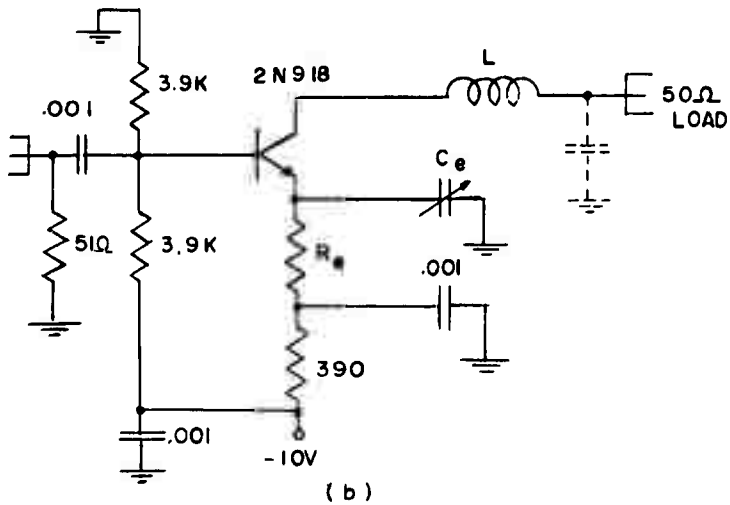

Figure 17. Emitter Feedback with Inductive Peaking

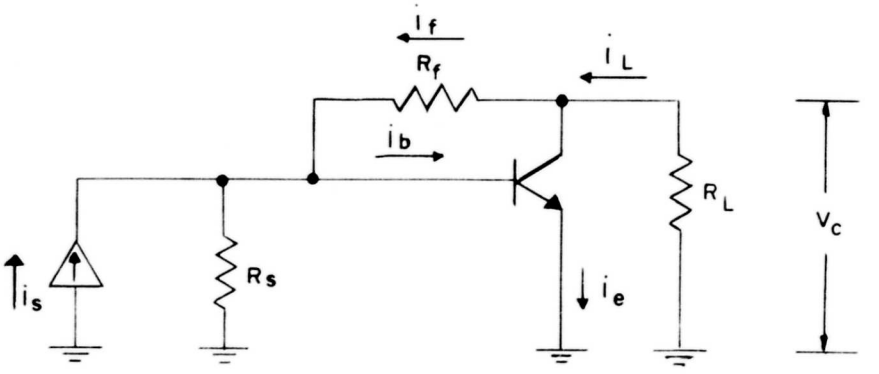

(a)

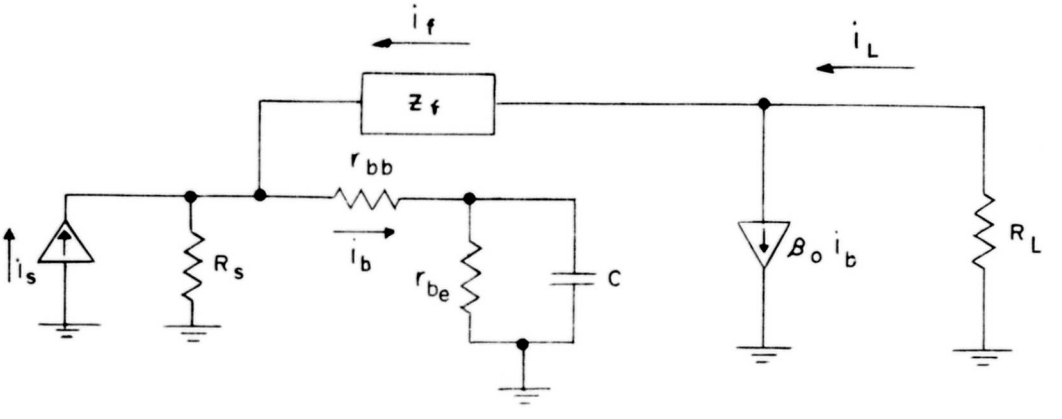

(b)

Figure 18. Collector-Base Feedback Amplifier

$$\frac{i_L}{i_S} = \frac{\omega'_{\alpha e}(p + A)}{p^2 + Bp + D} \tag{95}$$

where $A = \omega_f$

$B = \omega_f + \omega'_{\beta e} + \omega_L$

$D = \omega_f \omega'_{\beta e} + \omega'_{\alpha e} \omega_L$

As in the preceding section, it is desirable to manipulate the pole-zero location to obtain the desired response. If $\omega_f = \omega'_{\alpha e}$, then the zero cancels one of the poles and the gain expression reduces to

$$\frac{i_L}{i_S} = \frac{\omega'_{\alpha e}}{p + \omega'_{\beta e} + \omega_L} \quad . \tag{96}$$

The 3 db bandwidth is

$$f_{3db} = f'_{\beta e}\left[\frac{R_f + R_L(1 + \beta_o)}{R_f}\right]. \tag{97}$$

The midband gain is unaltered by the presence of L and restores f_t back to $f'_{\alpha e}$ which is independent of the feedback.

Figure 19 shows the frequency response for a single stage common emitter amplifier with a small resistive load. The current gain is plotted as curve 1 for the case of no feedback. A broader bandwidth is obtained with curve 2 by feeding back a portion of the output to the input by connecting a resistor between the collector and base. By opening up the feedback path between the collector and base at high frequencies, by the use of an inductance, the bandwidth can be extended as indicated by curve 3.

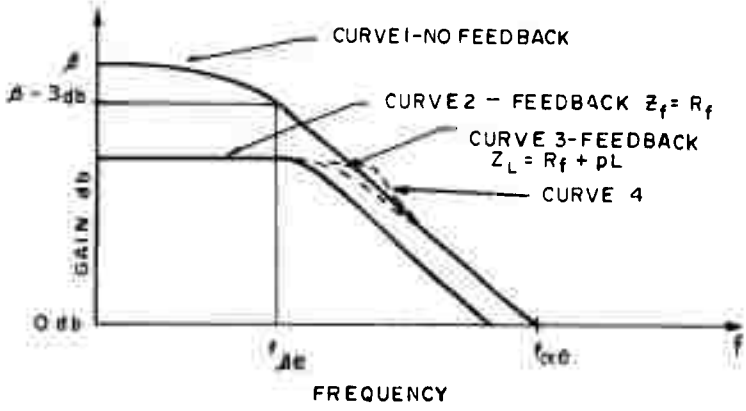

Figure 19. Frequency Response of Collector-Base Feedback Amplifier

The introduction of feedback results in reduced input and output impedance. The output characteristics of the collector to base feedback amplifier look like a constant voltage source.

As with the emitter feedback case, the pole-zero cancellation criterion, i.e., $\omega_f = \omega'_{\alpha e}$, does not yield the flattest amplitude or phase response. Since Equation (95) is of the same form as Equation (69) in the preceding section, the collector base feedback amplifier response can be made to be identical to that when emitter feedback is used. The result is shown by Curve 4.

We have shown previously that the current gain-bandwidth product f_t is not the limiting parameter for a transistor. The maximum frequency of oscillation defines the upper operating limit. Thus, by the use of a transformer in the collector circuit, we can increase the power gain of this amplifier. If the transformer is a current step up device of ratio N, then the amplifier's ratio of input to output current becomes

$$\frac{i_L}{i_S} = \frac{i_c N}{i_S} \tag{98}$$

The power gain can be written as

$$G_p = \left(\frac{i_L}{i_S}\right)^2 \frac{R_{OUT}}{R_{IN}} \tag{99}$$

By Equation (15) the power gain-bandwidth product becomes

$$f_{max} = \frac{i_L}{i_S}\sqrt{\frac{R_{OUT}}{R_{IN}}}\, f_{3db} \tag{100}$$

For most applications $R_{OUT} = R_{IN} = R_L$; thus

$$f_{max} = \frac{i_L}{i_S} f_{3db} \tag{101}$$

Equation (91) is written, when a transformer is used,

$$\frac{i_L}{i_S} = \frac{N R_f}{R_f + N^2 R_L}\left[\frac{\beta_o}{\dfrac{\beta_o R_L N^2 + R_f}{R_L N^2 + R_f} + jf/f'_{\beta e}}\right] \tag{102}$$

The power gain bandwidth product thus becomes

$$f_{max} = f'_{\alpha e}\frac{N R_f}{N^2 R_L + R_f} \tag{103}$$

Placing an inductor in the feedback loop as was the case in Equation (95) [R_L must be replaced by N^2R_L], f_{max} is raised to

$$f_{max} = N f'_{\alpha e} \tag{104}$$

The current step up ratio N may increase only to a point. f_{max} can approach but never exceed the optimum gain-bandwidth given by Equation (21).

By the use of special networks, the optimum value of f_{max} can be exceeded. This is discussed elsewhere and will not be considered further here.

A collector feedback amplifier was not tested since a broadband current source was not available. Driving from a 50 ohm source will yield some results; however, this drive impedance was felt to be too low tc be of usefulness here.

c. Grounded Base

Another transistor configuration that is useful in constructing wideband low pass amplifiers is the grounded or common base circuit. Figure 20(a) shows this amplifier feed from a current source and a load Z_L in the output. This amplifier has a very low input impedance, very high output impedance, a current gain slightly less than unity and the output signal is in phase with the input. The equivalent circuit of this amplifier is shown in Figures 20(b) and (c).

In the grounded emitter configuration, the collector-base capacitance adds to the transistor's input capacitance (Miller effect). The result is a lower cutoff frequency. From the equivalent circuit for the grounded base, this capacitance shunts r_{bb} and not r_ϵ, thus the base time constant is not increased by the presence of C_{bc}. Since the base time constant is the primary factor controlling the amplifier's bandwidth, we would expect larger bandwidth from the grounded base configuration. Generally the load shunting effects of C_{bc} can be neglected below the base cutoff frequency. Therefore the grounded base cutoff frequency shall be defined as

$$\omega_{\alpha b} = \frac{1}{r_\epsilon C_\epsilon} . \tag{105}$$

The presence of C_{bc} from collector to base produces a positive feedback to the base which alters the effective base impedance. Because of this feedback effect, the base impedance appears as a series real and reactive circuit which is a function of frequency. If a resistive or capacitive load is used, the amplifier's input impedance is positive and thus the amplifier is stable. However, if too large an inductive component is introduced in the load, the input impedance can have a negative real component thus producing oscillations.

The grounded base stage current gain is

$$A_i = \frac{i_L}{i_S} = - \frac{R_S}{Z_{IN} + R_S} \frac{\alpha_o}{1 + j(\omega/\omega_{\alpha b})} \tag{106}$$

where

$$Z_{IN} = r_\epsilon + \frac{r_{bb}}{\beta} = (r_{be} + r_{bb})\ 1/\beta \text{ for } \omega < \omega_{\alpha b} \text{ and } Z_L = R_L$$

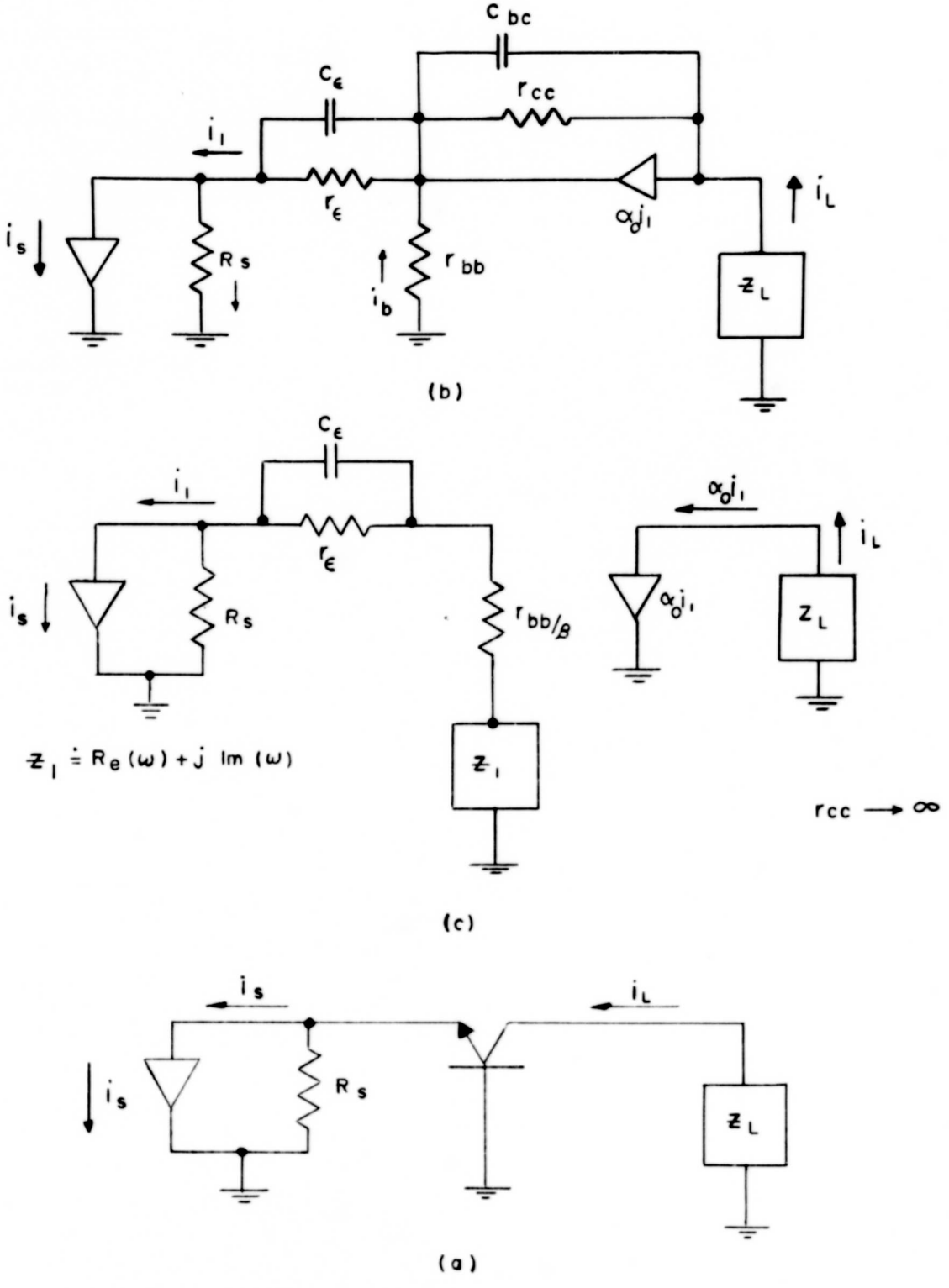

Figure 20. Grounded Base Amplifier Equivalent Circuit

If the amplifier were driven from a current source where $R_S \longrightarrow \infty$ then

$$A_i = \frac{i_L}{i_S} = \frac{-\alpha_o}{1 + j(\omega/\omega_{\alpha b})} \tag{107}$$

Operating strictly as a current device the gain is seen to be less than unity. With the large output impedance of the ground base amplifier, a transformer can be used to increase the stage current gain. The current gain will thus be equal to

$$A_i = \frac{-\alpha_o N}{1 + j(\omega/\omega_{\alpha b})} \tag{108}$$

where N is the current step up ratio of the transformer.

The power gain of the device is given[2]

$$G_p = \frac{4A_i^2 Z_C R_S}{(Z_{IN} + R_S)^2} = \frac{4Z_C R_S}{(Z_{IN} + R_S)^2} \frac{\alpha_o^2}{[1 + j(f/f'_{\alpha e})]^2} \tag{109}$$

$$f_{3db} = f'_{\alpha b}$$

$$f_{max} = \frac{2\sqrt{Z_C R_S}}{Z_{IN} + R_S} \alpha_o f'_{\alpha b} \tag{110}$$

The gain can be increased by increasing the load, Z_C, the impedance seen at the collector. Such an increase in load impedance can be obtained by using broadband transformers like those described by C.L. Ruthroff.[9] The particular transformer useful in this case is the 4:1 impedance transformer shown in Figure 14, which is wound to form a transmission line. Ruthroff obtained over 700 MHz bandwidth at the 3 db points with the lower cutoff at 200 KHz.

When this transformer is combined with the grounded base amplifier, as shown in Figure 21, the load seen at the collector is increased by 4.

If we assume that $R_L = R_S$

$$G_p = \frac{16R_L^2}{(Z_{IN} + R_S)^2} \frac{\alpha_o^2}{1 + j(f/f_{\alpha e})} \tag{111}$$

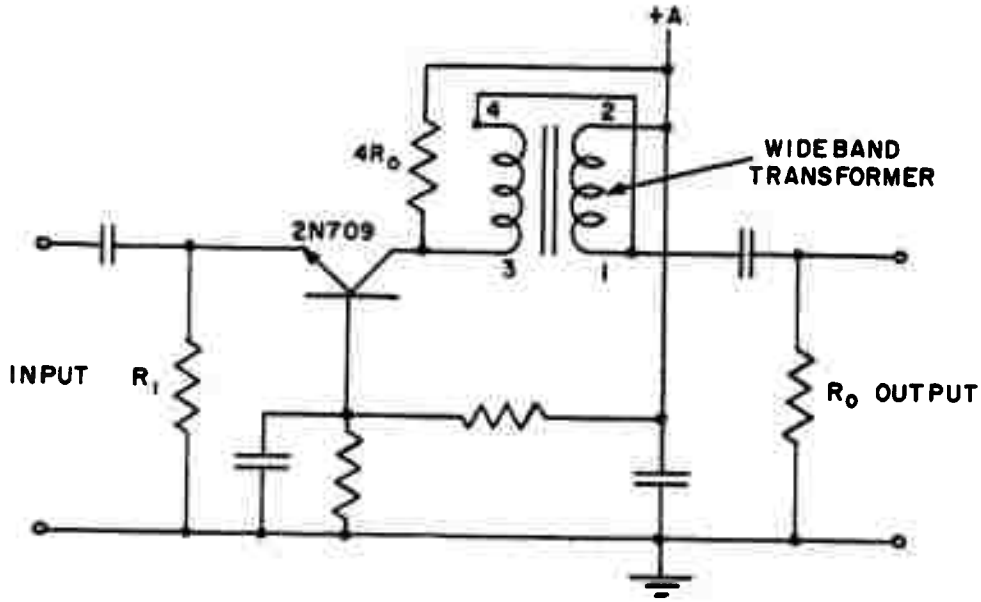

Figure 21. Wideband Amplifier

As an example, if Z_{IN} = 8.4 ohms, $R_L = R_S$ = 50 ohms, and α_o = 0.97, then the mid-band power gain is

$$G_p = 16 \left(\frac{50}{58.4}\right)^2 (0.97)^2 = 11.1 \text{ or } 10.1 \text{ db.}$$

The experimental results taken from a 2N918 transistor in the grounded base configuration are shown in Figure 22. Here a wideband 4:1 transformer was used. The measured input impedance Z_{IN} = 8.4 ohms. Curve 1 was taken with the circuit of Figure 21. The inductance of the transformer results in peaking at the high end. The addition of a small shunt capacitor (curve 2) across the load lowers the high frequency peak and raises the low frequency end to produce a flat response of 8.5 db to 350 MHz with the 0.5 db point at about 400 MHz and the 3 db down point at 540 MHz. This gain compares favorably with the theoretical figure of 10.1 db.

Curve 2 yields a power gain-bandwidth product of

$$f_{max}\Big|_{(\text{curve } 2)} = 2.68 \times 540 = 1440 \text{ MHz}$$

which is considerably above the theoretical maximum f_{max} = 950 MHz given in Equation (38e) for the grounded emitter or base configuration.

This increased f_{max} is due to two factors. One is the reduced Miller feedback effect that results in the grounded base amplifier. Here the "alpha" cutoff frequency is not affected as much by the amplifier's gain as is the case for the grounded

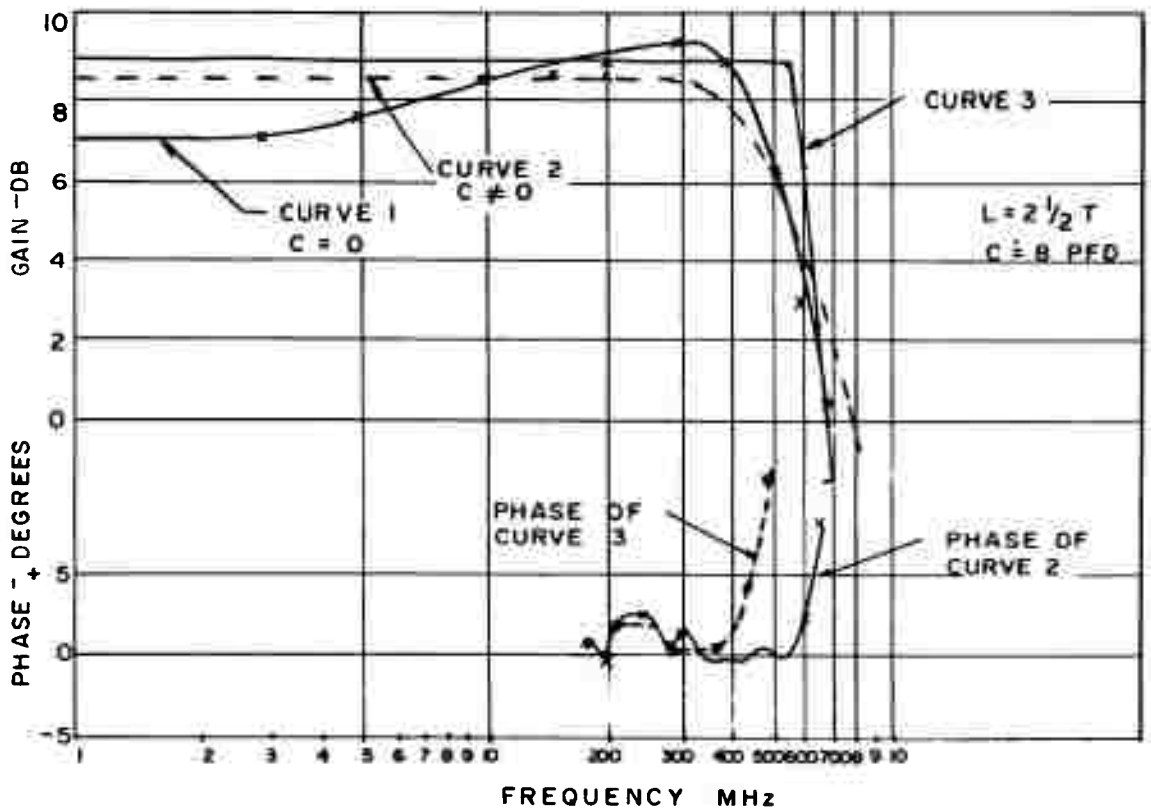

Figure 22. Grounded Base Amplifier Response Using Wideband Transformers

emitter case. The second factor is due to the presence of series inductance produced by the transformer. The phase response corresponding to curve 2 is shown in the same figure. Note that the phase response is linear to about 540 MHz or the 3 db amplitude point.

The addition of a small inductor between the transistor collector and transformer and the adjustment of the load shunting capacitor will result in a flat response to 550 MHz as shown by curve 3 of Figure 22. The 3 db point occurs at 600 MHz with an increase in midband gain to 9 db. The resultant f_{max} is

$$f_{max}\Big|_{(\text{curve } 3)} = 2.82 \times 600 = 1700 \text{ MHz}$$

As is generally the case with series peaking, the phase becomes non-linear at a lower frequency as can be seen in the same figure.

Several important facts are worth noting here.

1. The load impedance cannot be increased without limit. In the derivation of Equation (21), C_{bc} was neglected. As Z_L is increased the collector time constant will become significant, thus limiting the bandwidth. In practice it has been found that an upper limit of about 200 ohms is possible before bandwidth reduction occurs.

2. The grounded base cutoff frequency, $\omega_{\alpha b}$ is somewhat higher than $\omega'_{\alpha e}$ for the grounded emitter case. This is because the Miller effect in the latter case increases the base time constant. This effect is not present in the grounded base circuit.

3. The use of transformers usually introduces inductances in the load. If these inductances are allowed to become too large, oscillations can occur.

Due to its extremely low input impedance, the grounded base amplifier is generally driven from a current source. However, it can be driven quite satisfactorily from a voltage source. The output resembles a current source.

In experimental grounded base amplifiers using the 4:1 transformer, gain-bandwidth products in excess of the theoretical maximum f_t were consistently obtained from a number of different transistors. They included the 2N2999, 2N709, 2N918, 2N3633, and 2N2784/51. In each case, the addition of a small inductance in series with the transformer's primary, and capacitance across the secondary like that shown in Figure 23, provided series peaking which extended the 0.5 db and 3 db response by a significant amount. However, it must be kept in mind that the addition of such an inductance can produce oscillations.

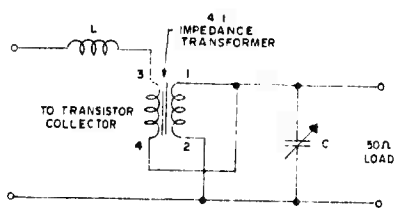

Figure 23. Wideband Transformer and Series Peaking

PART II

CASCADING WIDEBAND AMPLIFIERS*

I. DESIGN THEORY OF CASCADED WIDEBAND TRANSISTOR AMPLIFIER

A. INTRODUCTION

In Part I, the design and construction of single amplifier stages was seen to be quite simple. However, precautions must be taken when several stages are cascaded, if near maximum performance with minimum adjustments is to be obtained.

Generally, optimum performance and minimum adjustments are not obtained when identical stages are cascaded, due to internal as well as external feedback interaction. For example, the wideband amplifier described in reference 8 utilized cascaded collector to base feedback amplifiers to obtain 55 db gain over a 500 MHz bandwidth. A single stage, as shown in Figure 24(a), was easily designed to yield the response shown in Figure 24(b). However, when three such stages were cascaded, the frequency response of Figure 25 resulted. Note the large peak and dip due to feedback interaction. The response was flattened by modifying the feedback and output networks. It has been the experience of this author that any adjustments at these frequencies are tedious and time consuming, since slug tuned coils and variable resistors can no longer be used. A minimum of adjustments are essential if the engineering costs are to be minimized and the production or reproducibility of such amplifiers is to be realized.

The problem here, as with most identically cascaded amplifier stages, is the interaction between stages because of improper drive sources. As will be shown below, some amplifier configurations require a current source as a driving generator while others require voltage sources. Likewise, the output characteristics of transistor amplifiers can approximate either current or voltage generators depending on their design. Therefore, for minimum interaction, amplifiers designed to be driven from a current source must be preceded by an amplifier designed with the output characteristics of a current generator. This technique will lead to a cascaded amplifier chain requiring minimum adjustment and near maximum performance.

B. AMPLIFIER SELECTION FOR CASCADED CHAIN

To indicate the approach suggested above, the symbolism shown in Figure 1 will be employed. The letter above the amplifier input indicates the type driving source for optimum performance. The letter "e" indicates a voltage source, while "i" indicates a current source. The letter above the output terminal is used to indicate

---

* After this report had been completed, reference 13 by Cherry et al was discovered. Here Cherry discusses the cascading of an emitter feedback amplifier and collector-base feedback amplifier. It is felt that this report presents the concepts in more general terms as well as shows experimental results not present in Cherry's work.

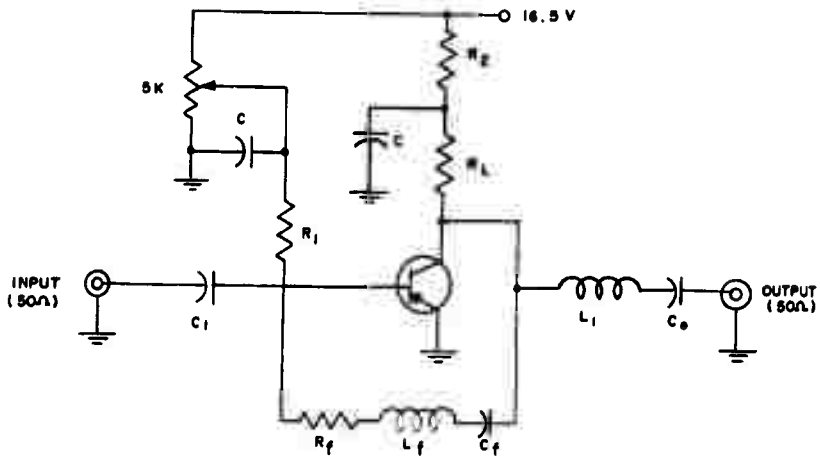

C C_f C_i C_o 1.0 μf 25 v

R_f 120Ω, 5% HFR

R_1 10K HFR

R_L 1K, 5% HFR

R_2 1K 1% (USED FOR MEASURING I_c)

L_f 111 #22, 1/8" DIA X 13/16" LONG

L_f 31 #22, 1/8" DIA X 1/4" LONG

Figure 24(a). Schematic Diagram of a Single Stage Amplifier

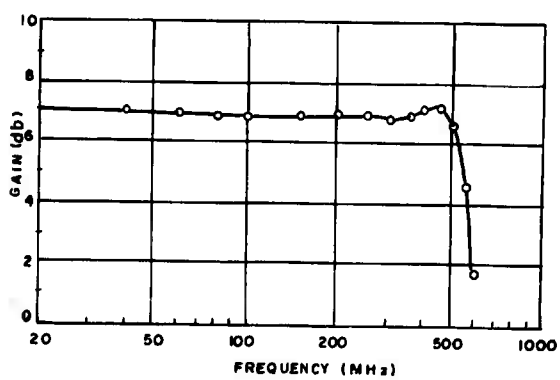

Figure 24(b). Frequency Response of a Single-Stage Amplifier

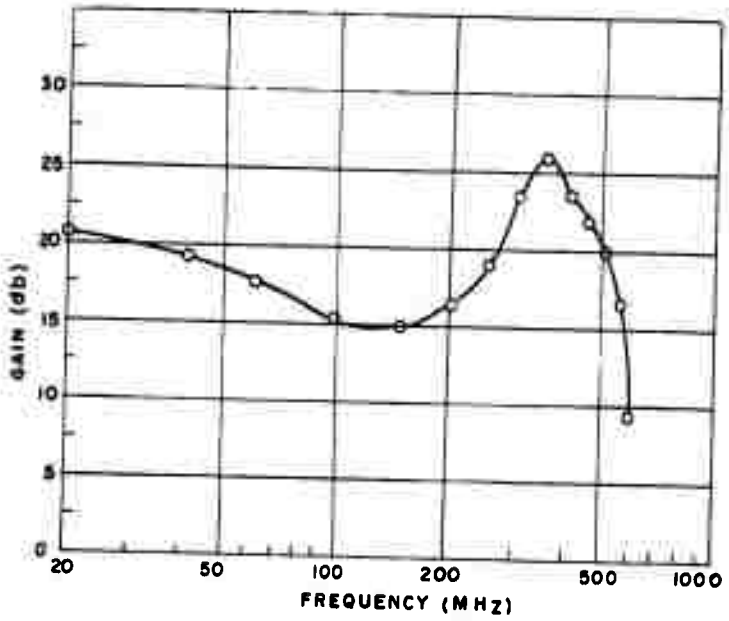

Figure 25. Frequency Response of a Three-Stage Amplifier

the output characteristics of the amplifier; that is, whether it approximates a current or voltage generator. For example, Figure 1(c) should be driven from a current source and its output is similar to a voltage generator. As shown below, this could be obtained by using a grounded emitter stage, with collector-base feedback.

When cascading amplifiers, it is desirable that the connected terminals have the same symbols or similar characteristics as the example shown in Figure 2. Amplifier 1 should be driven from a current generator. The output of amplifier 2 is a voltage generator and is ideally suited for driving an amplifier such as 1 or a terminated transmission line.

A number of single stage amplifier configurations were analyzed and classified in Part I according to the symbols introduced here. These results are summarized and catalogued in Table I for easy reference.

As can be seen, three of the four output characteristics (a, b, d) have been indicated as resembling current generators. Likewise three of the four amplifiers (a, c, d) are indicated to have inputs requiring current driving sources. The degree to which these input-output characteristics are valid varies considerably and should be discussed.

If two amplifiers are connected such that the output of the first is a current source with a finite output impedance Z_{OUT}, and the input to the second is current

TABLE I

AMPLIFIER CIRCUITS AND SYMBOLISM

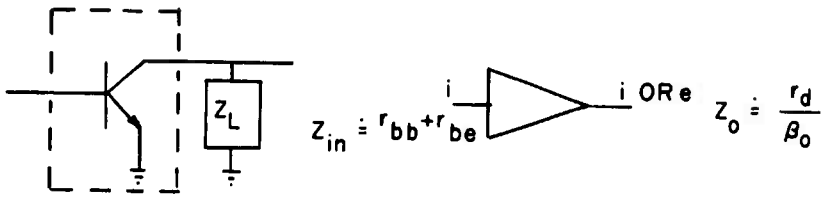

(a) GROUNDED EMITTER

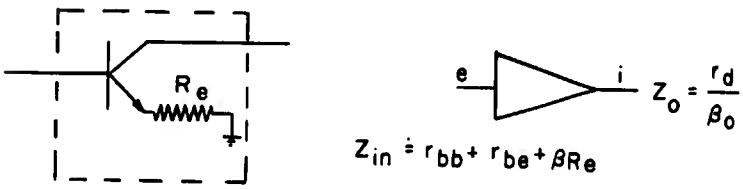

(b) COMMON EMITTER - EMITTER FEEDBACK

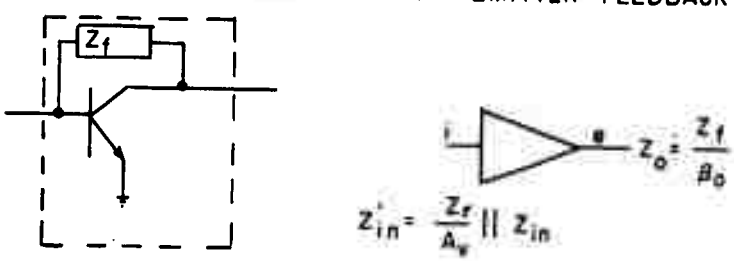

(c) GROUNDED EMITTER - COLLECTOR - BASE FEEDBACK

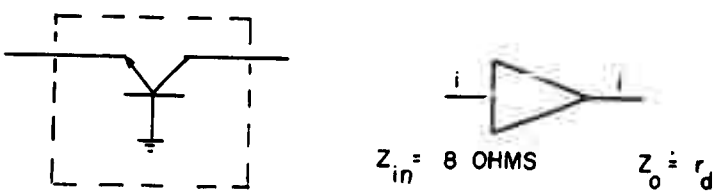

(d) GROUNDED BASE

sensitive with a nonzero impedance Z_{IN}, the coupling efficiency η_i due to noninfinite and nonzero output-input impedance is given by

$$\eta_i = \frac{Z_{OUT}}{Z_{OUT} + Z_{IN}} \quad . \tag{112a}$$

Note that as $(Z_{OUT}/Z_{IN}) \longrightarrow \infty$, $\eta_i \longrightarrow 1$.

If the first stage output resembles a voltage source and the input to the second stage is voltage sensitive, the coupling efficiency η_e becomes

$$\eta_e = \frac{Z_{IN}}{Z_{IN} + Z_{OUT}} \quad . \tag{112b}$$

Again for ideal sources and sinks $(Z_{IN}/Z_{OUT}) \longrightarrow \infty$; therefore, $\eta_e \longrightarrow 1$.

To provide a coupling efficiency of 0.99 requires that the ratio of Z_{OUT} to Z_{IN} for the current case and Z_{IN} to Z_{OUT} for the voltage case be at least

$$\left.\frac{Z_{OUT}}{Z_{IN}}\right|_i > 99 \text{ or } \left.\frac{Z_{IN}}{Z_{OUT}}\right|_e > 99. \tag{112c}$$

It is also important to know how much effect a given percent variation of Z_{IN} will have on the gain of the amplifier pair. This is determined by the resultant variation of η. Differentiating Equations (112a and b) with respect to Z_{IN} and re-arranging, one obtains

$$d\,\eta_i \doteq \frac{Z_{IN}}{Z_{OUT}} \frac{d\,Z_{IN}}{Z_{IN}} \text{ or } d\,\eta_e \doteq \frac{Z_{OUT}}{Z_{IN}} \frac{d\,Z_{IN}}{Z_{IN}} \quad . \tag{112d}$$

In effect, the percent variation of the input impedance on gain is reduced by the ratio of input-output impedances.

The output impedance of a current generator ideally approaches infinity, whereas the source impedance of a voltage generator is ideally quite low. With this in mind, we can consider how close the output characteristics resemble the symbols indicated to the right in Table I. Note that we can make the output of a current source approach that of a voltage source by shunting its output with a small impedance. This is not desirable from a power standpoint; however, power matching over a broad band of frequencies should be secondary.

1. Ground Emitter

The output impedance of the grounded emitter configuration in Table I(a) is given by approximately r_d/β_o [1] where r_d is the collector output impedance and β_o is the midband current gain. Typical values of r_d approach a half megohm. With $\beta_o \doteq 50$, the output impedance becomes $Z_o \doteq 10,000$ ohms, which is not too high an

impedance for a current source; yet it is much higher than could be tolerated for a voltage source. The output impedance decreases to a low value as frequency increases.

It is shown in Section I.B., Part I, that the grounded emitter configuration of Table I(a) is a current amplifying device and, as such, produces minimum interaction when driven from a current source as indicated. Its input equivalent circuit (neglecting feedback effects) is approximately that shown in Figure 26(a) and has the impedance

$$Z_{IN} = r_{bb} + \frac{r_{be}}{1 + j\omega r_{be} C_{be}} .$$

The input impedance is fairly low for quality high frequency transistors. This expression varies as shown in Figure 26(b) with frequency from a real value of about 1000 ohms at low frequencies to a quite low positive complex value at higher frequencies. Due to internal feedback, the load impedance at the collector will also affect this input impedance.

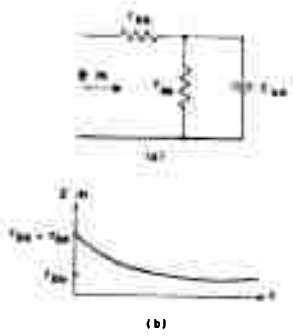

Figure 26. Grounded Emitter Input Circuit

To drive this amplifier in such a manner as to provide maximum power transfer would require a complex coupling network. This network would require adjustment for each new transistor since parameters vary from unit to unit. If several identical transistors are cascaded, the adjustment of the second interstage coupling network would thus affect the input impedance of the first, further complicating the adjustments. When cascading extremely wideband amplifiers, the realization and adjustment of such networks is extremely difficult if not impossible. Therefore, when cascading transistor amplifiers, power matching should not be attempted, but the first and most important consideration should be the selection of amplifier configurations that will minimize the effects of input and feedback impedance variations. The maximum power transfer matching conditions should be considered only as a secondary condition and the following design procedure used.

The grounded emitter amplifier of Table I(a) is a current amplifier. Neglecting how the current gain varies with frequency, the prime requisite in obtaining a flat response with frequency is that the input current remain constant across the

band, regardless of how the input impedance changes. Only a current generator with an output impedance very large compared to that of the amplifier's input can provide this constant input current. Thus, the input current to the amplifier remains constant regardless of how the input or output impedance varies.

Assuming the grounded emitter amplifier is driven from an ideal current source, we can now provide the proper network in the collector circuit to compensate or shape the response as desired without affecting the driving circuit. Such networks are easily realized and are discussed in section II.B., Part I, along with the design and experimental results of an individual grounded emitter stage.

Generally, when networks are placed in the collector, the output impedance is reduced and it no longer resembles a current generator. It can be seen that it would not be advisable to follow this stage with another of the same type, unless its output impedance is extremely low. Any variation in the input impedance of the following stage will produce a variation in the output network impedance, and thus cause undesirable gain variations as given by Equation (112d). If the input impedance of the second stage is extremely high as compared to the output network of the driving stage (100:1 or better as given by Equation (112c)), then the effective impedance variation would be negligible.

It would be more feasible to drive a stage that requires a voltage driving source with this amplifier. Such an amplifier is the common emitter amplifier with emitter feedback provided like that shown in Table I(b) and discussed in the following section.

Although the grounded emitter amplifier is a current amplifier, its input impedance (1000 to 50 ohms) makes it difficult to drive from another transistor current generator. That is, most high frequency transistors do not have a high enough output impedance across the band. Thus it is often desirable to drive this type of amplifier from a low impedance voltage source. By low is meant an impedance small enough that the variation produced by the shunting input impedance is minimized as given by Equation (112c and d). Even this condition is often difficult to obtain. For this reason, the grounded emitter amplifier, as such, should be avoided. However, appropriate modifications can be made to improve these shortcomings (Table I b and c), and are discussed in the following pages.

2. Common Emitter - Emitter Feedback

In the grounded emitter configuration, the amplifier's response was shaped by placing the proper network in the collector circuit. The same result, in general, can be obtained by placing an impedance in the emitter circuit and driving the amplifier from a voltage source. This impedance usually takes the form of either a small resistor (10 to 50 ohms) or a small parallel resistor and capacitor (C = 5 pfd). See Section II.B.1., Part I, for detailed analysis and experimental results from single stage amplifiers of this type. The use of such an emitter impedance now leaves the collector circuit unaltered to act as a constant current generator with an output or source impedance identical to the grounded emitter case, i.e.,

$$Z_o = r_a/\beta_o = 10,000 \text{ ohms}.$$

When used as a voltage amplifier, the voltage gain is given by the approximate expression

$$A_v \doteq \frac{R_L}{Z_e}. \tag{113}$$

The transconductance is

$$\frac{i_{OUT}}{v_{IN}} \doteq \frac{1}{Z_e}$$

To realize the desired amplifier frequency response by the addition of an emitter resistance, the driving source must be changed to a voltage generator. To see this, consider that the input voltage remains constant across the band of interest. Assuming the base-emitter voltage drop to be negligible, the voltage across R_e will remain constant. The resultant emitter current, given by

$$I_e = \frac{V_{IN}}{R_e} \tag{114}$$

will also remain constant. The collector current is given by

$$I_c = \alpha I_e = \frac{\alpha V_{IN}}{R_e} \tag{115}$$

where α is down 3 db at about $f_{\alpha e} \doteq f_t$.

If R_e is replaced by a parallel resistor and capacitor such that the time constant is equal to $f_{\alpha e}$, this impedance will decrease at the same rate as α, and thus the collector current will remain constant over a wider range of frequencies. Here we have assumed that the amplifier is driven from a constant voltage source with a low driving impedance.

Although the addition of R_e or Z_e has increased the amplifier's input impedance by $\beta_o R_e$ ($\beta_o = 50$, $R_e = 20$, $\beta_o R_e = 1000$ ohms), it is still a complex impedance that varies with frequency.

In order to effect the maximum power transfer, a complex matching network would be required with all the adjustment problems discussed in the previous section. Neglecting the maximum power transfer condition, if we make the voltage generator's source impedance extremely small (50 ohms) as compared to that of the amplifier input, one can tolerate a large variation in amplifier input impedance without affecting the input voltage and amplifier response. The addition of R_e is generally sufficient to realize this condition.

Here again it can be seen that cascading stages identical to Table I(b) would not meet the required conditions since the output is about 10,000 ohms whereas the input is about 1200 ohms ($\eta_i \doteq 0.89$) at low frequencies and drops to about 50 to 100 ohms ($\eta_i \doteq 0.95$) at high frequencies.

We could, however, combine the two circuits described to this point, in order to yield a cascaded pair; that is, an emitter feedback stage driving a grounded emitter stage. However, the output impedance of the first stage is not sufficiently high in comparison to the second stage's input impedance to prevent gain variation as a result of input impedance changes.

3. Grounded Emitter - Collector-Base Feedback

The grounded emitter collector-base feedback amplifier shown in Table I(c) is formed by placing a feedback impedance from the collector to base of the basic grounded emitter configuration of Table I(a). Because of the addition of this feedback element, both the input and output impedances of the amplifier have been reduced. The input impedance is reduced due to the input shunting effects of Z_f as shown in Figure 27(b). Due to the feedback effect, Z_f, the input is reduced by the voltage gain of the amplifier. This reduced impedance shunts the amplifier's input impedance to provide a relatively low over-all input. For small values of Z_f, this shunting impedance dominates the input impedance. If Z_f consists of a series R and L, it will tend to increase as Z_{IN} decreases, thus tending to maintain a constant input impedance. The same is true of the amplifier's output impedance. The load R_L is shunted by Z_o which is just Z_f reduced by the amplifier's current gain. Z_f increases with frequency if inductances are included, thus tending to maintain constant output impedance.

The input to this amplifier is current sensitive. If it is driven from a voltage source, the feedback effect is severely reduced. As the driving source impedance approaches zero, the feedback effect is reduced until in the limit the amplifier degenerates back to the grounded emitter case. To understand this, let us assume the amplifier of Figure 27(a) or Table I(c) is driven from a current source. Being a transistor, the basic amplifier is current sensitive. The output voltage, e_2, is proportioned to the transistor's base current i_b (assume constant load impedance), where i_b is equal to the difference of the driving current i_1, and the feedback current i_f, i.e., $i_b = i_1 - i_f$ or $i_1 = i_b + i_f$. In other words, the input current to the feedback amplifier has been increased thus reducing the input impedance, i,

$$Z_{IN} = \frac{e_1}{i_1} = \frac{e_1}{i_b + i_f} \doteq \frac{r_{bh} R_f}{\beta_o R_L} .$$

The primary object of using feedback is to maintain the output voltage constant for a constant input current. If an ideal current source is used to provide i_1, then a change in i_f (which is caused by a change in the output voltage e_2) will produce an equal change in i_b, thus correcting the output voltage back toward its original value.

If a nonideal current source (finite source impedance) is used, a change in i_f will produce a change in both i_1 and i_b. The change in i_1 reduces the change in i_b, thus reducing the stabilization of the output voltage. As the source impedance is reduced, the change in i_1 increases and i_b decreases, for a given change if i_f, until the limit $i_1 = i_f$ and $i_b = 0$. This is just the case when no feedback is used, i.e., a change in e_2 has no or little effect on i_b.

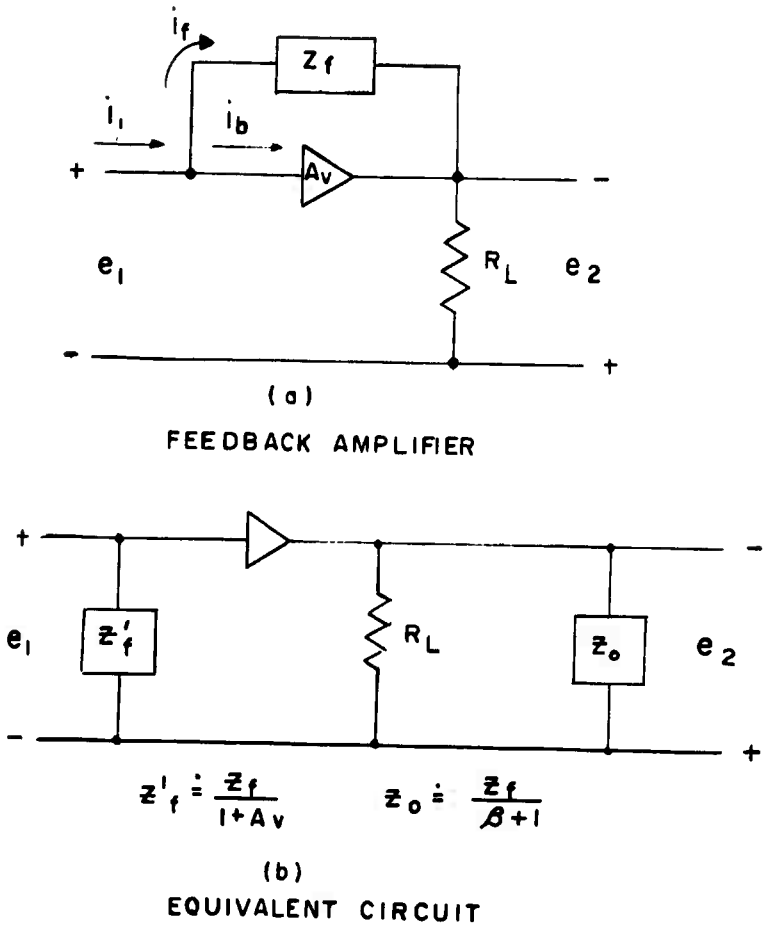

Figure 27. Feedback Amplifier Equivalent Circuit

It has been shown qualitatively above that to obtain near maximum performance of the feedback amplifier, its input is current sensitive, and, as such, should be driven from a current source. It has also been shown how the output of the amplifier attempts to maintain a constant voltage for a constant input current. Thus the output resembles a constant voltage generator with a lower source impedance. Due to the feedback, both input and output impedances are quite low (40 ohms) and do not vary excessively over the frequency band. Section II.C.2. gives a more complete analysis of this amplifier configuration.

The transresistance of the shunt-feedback amplifier is given as

$$\frac{v_{OUT}}{i_{IN}} \doteq -R_f. \tag{116a}$$

Its output impedance is

$$Z_{OUT} \doteq \frac{Z_f}{\beta_o}. \tag{116b}$$

To combine amplifiers in cascade, an ideal arrangement is to use the emitter feedback amplifier of Table I(b) whose output resembles a current source ($Z_o \doteq 10,000$ ohms) to drive the current sensitive collector-base feedback amplifier of Table I(c) ($Z_{IN} \doteq 35$ ohms). The last stage has a low output impedance ideal for driving a 51 ohm cable or another identical amplifier pair. The block diagram for this arrangement is shown in Figure 28. Values of $\eta_i \doteq 0.99$ are easily obtainable.

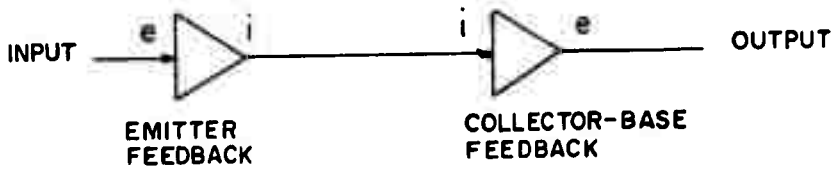

Figure 28. Block Diagram for Two-Stage Cascaded Amplifier

The resistance in the feedback network determines the midband gain while the inductance is adjusted to provide a flat response. If L is too large, the response will slope up with increased frequency or down for too small inductance. Figure 38 shows the response of two such pairs when cascaded.

4. Grounded Base Amplifier

The grounded base transistor amplifier as shown in Table I(d) has a very large output impedance $Z_o = r_d$, at low frequencies where $r_d = 500,000$ ohms which decreases with increasing frequencies. With this output characteristic, it resembles a near ideal current generator, particularly at lower frequency. The input impedance is extremely low, being approximately the emitter resistance r_ϵ (of the order of 8 ohms) and requiring a current driving source. The device has a current gain of about unity.

Due to the large impedance change from input to output, large power gain is obtainable if the input-output circuits were properly matched. For application in wideband amplifiers, the matched conditions must be ignored. The principal application of wideband grounded base amplifiers is as an impedance transformer. With its high-output impedance, it is ideally suited to drive a low impedance current sensitive amplifier stage such as the collector-base feedback amplifier. Since the grounded

base amplifier has, at most, unity current gain, two such identical cascaded stages would yield no gain unless step-up transformers were used between stages. Such an arrangement is possible using the wideband transformers described by Ruthroff[9]. Such transformers are discussed in a later section. See Section II.D., Part I, for analytical and experimental results for grounded base amplifiers. The grounded base configuration is, however, only conditionally stable and care must be taken to prevent oscillations.

When the grounded base amplifier is used, an emitter feedback stage is generally required to transform its input up to a usable level ($\eta_i \approx 0.9999$). An arrangement of amplifiers to yield satisfactory performance with minimum adjustment is shown in Figure 29. An emitter feedback amplifier drives a grounded base which, in turn, drives a collector-base feedback amplifier. The experimental results of such an amplifier are given in Section II.E. and Figure 41. The only adjustment required is to select the resistor and inductor in the last stage to yield the desired midband gain and obtain a zero response slope. A peaking capacitor could be placed across R_e to extend the high frequency response by a few percent.

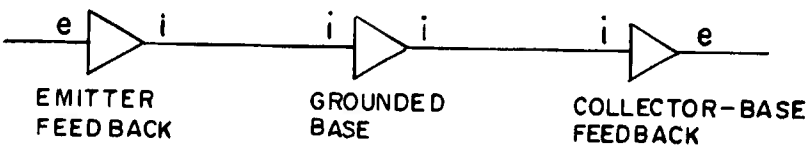

Figure 29. Cascaded Amplifier Triplet

C. DESIGN PROCEDURE

The first step in designing a cascaded amplifier is to draw the block diagram using the symbolism of Figure 2. This helps determine the input-output characteristics required of each stage for properly matching connected stages. From this block diagram, the amplifier configurations are selected on the basis of the input-output requirements. Once the amplifier configuration is selected, it is a straightforward procedure to design each stage or stages for the desired gain and bandwidth. A measure or figure of merit of how efficiently two stages are coupled is the use of the coupling efficiency given by Equations (112).

In the following section, the experimental results obtained from cascaded amplifiers designed by this method are given. In each case, the resulting gain and bandwidth agreed favorably with the theory. Of primary importance was the fact that only minor adjustments were required, and in no case did feedback interaction produce ripple or severe peaks and dips.

II. EXPERIMENTAL RESULTS

A. INTRODUCTION

The analysis, design and experimental results for each of the four individual stages shown in Table I are presented in Part I. Using these four basic amplifier configurations and the recommended procedure for cascading individual stages, the following cascaded amplifier configurations were built and tested.

a. Emitter feedback stage driving a grounded base amplifier.

b. Emitter feedback stage driving a collector-base feedback amplifier.

c. Emitter feedback stage driving a grounded base amplifier which, in turn, drives a collector base feedback amplifier.

The principal measurement made on these amplifiers was their gain versus frequency response. In addition, the phase response was obtained for several but not all of the configurations. Noise figure was not obtained. The results obtained from each cascaded configuration are presented in the following sections.

To determine how well the experimental amplifiers performed we use Equation (121) and calculate the theoretical gain that should be realized for the measured 3 db bandwidth. The total amplifier voltage gain (assume equal input-output impedances) for n stages is

$$G_v = \sqrt{G_{p1}} \times \sqrt{G_{p2}} \times \ldots \times \sqrt{G_{pn}} \,, \tag{117}$$

where G_p is the individual stage power gain. From Equation (15) we can write

$$G_v = \frac{f_{max}}{3\text{db B.W.}}\bigg|_1 \times \frac{f_{max}}{3\text{db B.W.}}\bigg|_2 \times \ldots \times \frac{f_{max}}{3\text{db B.W.}}\bigg|_n \,. \tag{118}$$

Here the term, 3 db B.W.$\big|_n$, is the nth stage's measured 3 db bandwidth. The individual stage bandwidth is related to the bandwidth of n cascaded stages by the approximate relation,[8]

$$S = \frac{\text{bandwidth of n cascaded stages}}{\text{bandwidth of one stage}} \doteq \left(2^{1/n} - 1\right)^{1/10} \,. \tag{119}$$

For n = 2 and n = 3, the bandwidth shrinkage factor is 0.915 and 0.875, respectively. Equation (118) becomes

$$G_v \doteq \left(2^{1/n} - 1\right)^{1/10} \left[\frac{f_{max}}{3\text{db cascaded B.W.}}\right]^n \,. \tag{120}$$

B. PRACTICAL CONSIDERATIONS

There are a number of practical considerations that should be discussed before we proceed to the experimental results obtained from various cascaded configurations. The two most important considerations by far are, in the order of importance, the transistor and the component layout.

Transistor Selection

The relationship between the amplifier performance and the transistor parameters is discussed in detail in Section I of Part I. Here we shall only comment on a few of the more important parameters. When building wideband amplifiers, it is of utmost importance to select a transistor that will consistently yield the desired gain for a specified bandwidth. The critical transistor parameters are seen from the expression for the device's maximum power gain-bandwidth product f_{max}. This is the frequency at which the transistor's power gain is unity. Note that, because the output impedance is higher than the input, power gain is possible even though the current gain is less than unity.

$$f_{max} = \sqrt{\frac{f_t}{8\pi r_{bb} C_{bc}}} \tag{121}$$

Here f_t is the device's current gain-bandwidth product or that frequency where the current gain β is equal to unity. The term r_{bb} is the transistor's base resistance and C_{bc}* is its base to collector capacitance. The product $r_{bb} C_{bc}$ ($r'_b C_c$ on data sheets) is the collector-base time constant. For a good high frequency transistor, this time constant will vary between 1 and 6 psec. This power gain-bandwidth expression is derived on the assumption that the driving source is matched to the input for maximum power transfer. The same assumption is true of the output. For wideband use this condition is almost impossible and should not be attempted as it is quite time consuming and varies from device to device. This expression will yield values larger than are usable in practice and therefore must be reduced.

Many manufacturers specify the parameters of this expression over a range of values — that is, the maximum, typical and minimum. The typical value is strictly that and should be ignored. When selecting a transistor by f_t, the minimum or guaranteed value should be used. In general, most of the units will fall between the minimum and typical, with few at the maximum value.

The same consideration is true of the collector-base time constant $r'_b C_c$. Here its maximum value should be used to compute f_{max}. Some manufacturers specify a guaranteed f_t or f_{max} which should be used instead of the typical values. It is frustrating and time consuming to strive for a given gain and bandwidth that is marginal for the transistor when a slightly better guaranteed device would yield the desired response with a minimum of effort.

---

* The rC time constant of equation (121) generally must be modified for different types of transistors. The product is generally a complex quantity not easily defined. This expression does, however, give a fairly accurate indication of f_{max}.

These above considerations are particularly critical when the amplifier is to be mass produced. If the parameters of a transistor are in doubt, they can easily be measured by use of a transfer-function and immittance bridge. The General Radio Type 1607-A is well suited for measuring the current gain β at various frequencies as well as Z_{IN}, Z_{OUT}, r_{bb}, C_{be}, etc.

Layout

Next in the line of importance is the layout of the components. It goes without saying that all leads should be short. Actually, this is somewhat misleading, since it is the length of the signal path that is important. This distinction in terminology is used to include the signal path through the grounding medium also. That is, the distance between grounding points must be short also.

A typical example of this problem was encountered when an output BNC connector was mounted at right angles to the chassis in order to reduce the length of the center conductor connection to the circuit. Although this length was short (0.2 inch) the ground path was about three quarters of an inch to the emitter bypass. The resultant peak at the high frequency end is shown by curve 1, Figure 30. The output connector was remounted on the ground plane as close to the emitter bypass as possible. The resonant peak was reduced to that shown by curve 2.

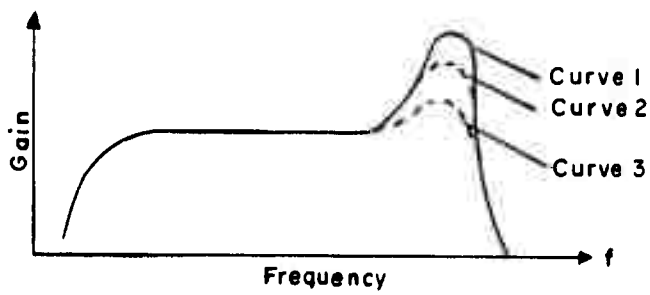

Figure 30. Amplitude Response from Poor Amplifier Layout

The 2N918 transistor being used has a fourth wire connected to the outside case. In the initial layout the transistors were suspended above a ground plane by their leads. When the case was grounded to the ground plane by a number 10 wire, the resonant peak was further reduced to that shown in Figure 30, curve 3.

Such peaks are generally caused by the transistor's output capacitance resonating with various stray inductances. When higher frequency transistors are used, the frequency at which the peak occurs is increased. Often, the loss associated with the inductance will increase with frequency sufficient to completely eliminate the peak.

A recommended layout procedure would require:

a. mounting the transistor case in the chassis or ground plane,

b. locating the transistors physically close to each other; also, mounting other components such as capacitors, connectors, etc., close to transistor cases,

c. using as small a physical size capacitors as possible. Preferably they should be good quality high frequency capacitors.

Ceramic capacitors are generally resonant between 1 and 30 MHz and should not be used for this reason.

C. COMPONENTS

Wideband Impedance Transformer

Often it is desirable to augment the output or input impedance of a transistor amplifier in order to increase its gain. For example, a grounded base amplifier has a unity current gain up to its alpha cutoff frequency. The use of a transformer to enlarge the load impedance seen by the collector will result in an increase in gain.

A conventional transformer cannot be used for wideband application because the interwinding capacity resonat s with the leakage inductance to produce peaks in the response, and thus limit its high frequency response. Ruthroff[9] has described a special broad-band transformer that operates similarly to a transmission line in which the coils are so arranged that the interwinding capacity is a component of the characteristic impedances of the line. The result is a small transformer with good high-frequency response.

The particular transformer of interest here is the 4:1 impedance transformer shown in Figure 14. The pair of wires which form the primary and secondary take the form of a twisted pair. The twisted pair is wound on a small ferrite torroid with windings closely spaced to maintain good coupling. In this configuration, the high-frequency response is determined by the length of the winding. The torroid forms used here had an inside diameter of 0.08 inches enabling small size and high frequency operation. Ruthroff has shown that if the line length of the windings exceeds $\lambda/4$, the response will be down by more than 1 db. The response is zero at $\lambda/2$. The transformer is matched when $R_L = 4R_o$. It has been found by this author that the response can be made to either increase or decrease with frequency by manipulating R_L. Often the presence of a high frequency peak in an amplifier response using such a device is caused by improper transformer matching. This condition can be eliminated by shunting either the primary or secondary, depending on which is terminated by too large an impedance.

Ruthroff obtained responses from 0.2 to 715 MHz (3 db). The low frequency response depends on the permeability of the core and the number of turns. The larger the permeability, the fewer turns are required to give a low frequency response. For good high-frequency response few turns are required. As few as one turn has been built by this author and found to perform nicely to 900 MHz. Here the low frequency response had to be sacrificed.

Capacitors

As mentioned above, the use of disc ceramic bypass capacitors can produce sharp resonances between 1 and 30 MHz and provide poor isolation at higher frequencies. A high frequency capacitor that was found quite satisfactory and used in the experiments reported here was a 1000 pfd discordal capacitor made by Allen Bradley Co. Both feed-thru (type FB2B) and stand-off (type SB4A) were used. These provide effective filtering to 1000 MHz. A new type feed-thru, type FWSN, made by Allen-Bradley is smaller and would be better than those used here.

Fixed Resistors

Allen-Bradley 1/4 watt, 5 percent carbon resistors were used throughout the experimental work and found to be satisfactory to 900 MHz. No tests were performed above this frequency. Half watt carbon resistors were tried at several points in the high frequency circuitry and no noticeable effects were noted; however, their size makes them bulky to handle. The 1/4 watt resistors are about the right size for high-frequency work.

Adjustable Resistors

Small adjustable noninductive resistors would be highly desirable in a location such as the feedback path of the collector-base feedback amplifier. Extreme care must be used with such components since they are inherently inductive. In addition, their bulky size increases the chances of stray capacitive interaction which can produce bothersome peaks within the passband. About the only place that such a component should ever be used is in the feedback path of the collector-base feedback amplifier where a series inductance is usually added. Even here, extreme care must be observed.

Inductors

At the frequencies we are considering here, the inductors should be air wound with a small diameter (a half watt resistor was used as a form to yield a satisfactory diameter). The use of slugs to vary inductance is not considered advisable. The presence of slugs not only produces loss within the coil, but the added stray capacitance could create resonant peaks. About the only way to vary the inductance is to either cut off turns or short adjacent turns with solder. The coupling between turns is quite low and the shorting of turns appeared to be satisfactory.

Connectors

BNC connectors were used throughout this work and did not appear to produce severe reflections.

Coaxial Cable

RG/58A and C coaxial cable was used between generator, amplifier and detector. This cable has a nominal characteristic impedance of 51.0 ohms and a capacitance of 29 pfd/ft. Care must be taken not to place a soldering iron on the cable. A burned spot can result in excessive reflections, peaks and nulls across the band.

D. TWO-STAGE CASCADED AMPLIFIERS CHAIN

It is desired to build a two-stage wideband amplifier which will be driven from a voltage source through a 51 ohm cable that is properly terminated. The block diagram to meet these conditions is shown in Figure 2. From Table I, we see that amplifier 1 can only be designed using the emitter feedback configurations of Table I(b). This is the only configuration that has a high enough input impedance over the band as compared to 50 ohms. The grounded emitter configurations of Table I(a) could possibly be used, although its input impedance is quite low at the upper frequency range. It is felt that more flexibility is afforded with the emitter feedback amplifier by the manipulation of Z_e.

Amplifier 2 can be designed using the configuration of Table I (a, c or d). A very low input impedance is required since it is being driven from a current generator having only a moderate source impedance. For this reason the grounded emitter amplifier is undesirable because of its higher input impedance. Both the grounded base and collector base feedback configurations have low input impedance and thus are favorable for consideration as amplifier 2. Due to its lower output impedance, the collector-base feedback amplifier is more desirable than the grounded base amplifier; however, the latter works quite satisfactorily when the 4:1 impedance transformer is employed.

In the following section, the experimental results using a grounded base amplifier for amplifier 2 are given. In the second section, the results using the collector-base feedback are given.

In the configurations tested, a 2N918 transistor was used. The transistors had a measured current gain-bandwidth product of 750 MHz. This was determined from a General Radio Transfer-Function to Immittance Bridge, type 1607-A. The approximate parameters for these transistors are given in Table II.

TABLE II

MEASURED AND CALCULATED TRANSISTOR PARAMETERS FOR 2N918
f_t = 750 MHz - Current Gain-Bandwidth
r_{bb} = 33 ohms
β_o = 50
C_{co} = 1 pfd
r_{be} = 167 ohms
$f'_{\beta e}$ = 16.6 MHz
f_{max} = 950 MHz - Maximum freq. of oscillation

1. Emitter Feedback - Grounded Base Amplifier

The schematic diagram of the emitter feedback - grounded base amplifier is shown in Figure 31. Because of the relatively high input impedance of the first stage, a 51 ohm resistor was placed across the input in order to properly terminate the driving source. The absence of this terminating resistor, when driven from 51 ohm coax, produces a large amplitude variation across the band. In Figure 31(a) the two stages are capacitively coupled together and the collector of the second stage is coupled directly to the 51 ohm load.

Amplitude Response

The response of amplifier, Figure 31(a), is shown as curves 1 and 2 of Figure 32(a). Curve 1 is the initial amplifier response before any adjustments were made. Here C_e had not been placed in the circuit. Curve 2 shows how the high frequency end can be picked up a slight amount by the use of C_e.

The hump in the response at 400 MHz is due, in part, to poor layout. The original peak was much higher but was reduced by the relocation of connectors and grounding of the transistor cases.

The gain of this amplifier configuration is seen to be quite low at 3 db out to 550 MHz when C_e is used. The low frequency response is well below 10 MHz. This low gain response is caused primarily by the small impedances that the collectors must operate into. That is, the first collector sees 8 ohms looking into the emitter of the grounded base amplifier. The grounded base collector must operate into 50 ohms. It is true that we advocated such an arrangement in the preceding sections to reduce the impedance variation problem — that is, that a high output in impedance (current source) drive a low input impedance. A practical ratio appears to be about 100:1, whereas the collector-to-emitter impedance ratio here is much greater. Also, the impedance variation of the high frequency 50-ohm load is quite small.

Therefore, from these considerations the gain can be increased without complicating the adjustments by use of wideband transformers like the 4:1 impedance transformer discussed in Section II.C. To see their individual effect on the amplifier, such a transformer was first placed between the collector of the grounded base amplifier and the 50-ohm output load as shown in Figure 31(b). This transformer consisted of two turns of a twisted pair wound on a 0.08 inch I.D. torroid. When connected as shown, it transforms the impedance by a ratio of 4 to 1. The circuit of Figure 31(b) yielded the response shown by curves 1 and 2 of Figure 32(b). Without C_e, the initial response was that of curve 1. Note that the peak or hump is still present although it has shifted by a slight amount. Before any adjustments were made, the gain was found to be 6.5 db and flat (except for the peak at 350 MHz) to 375 MHz. When C_e was added and adjusted, the high frequency response was raised to 500 MHz with the 3 db point at about 600 MHz. Equation (120) predicts a maximum theoretical gain of 7.4 db. This is only 1.1 db above the measured gain. Considering the simplicity and ease of adjustment, the 1.1 db should be tolerable.

A second wideband impedance transformer was added between the two amplifiers as shown in Figure 31(c). Initial amplifier response without C_e or R_c is shown by curve 1, Figure 32(c). Due to the coil inductance, the inductive input to the

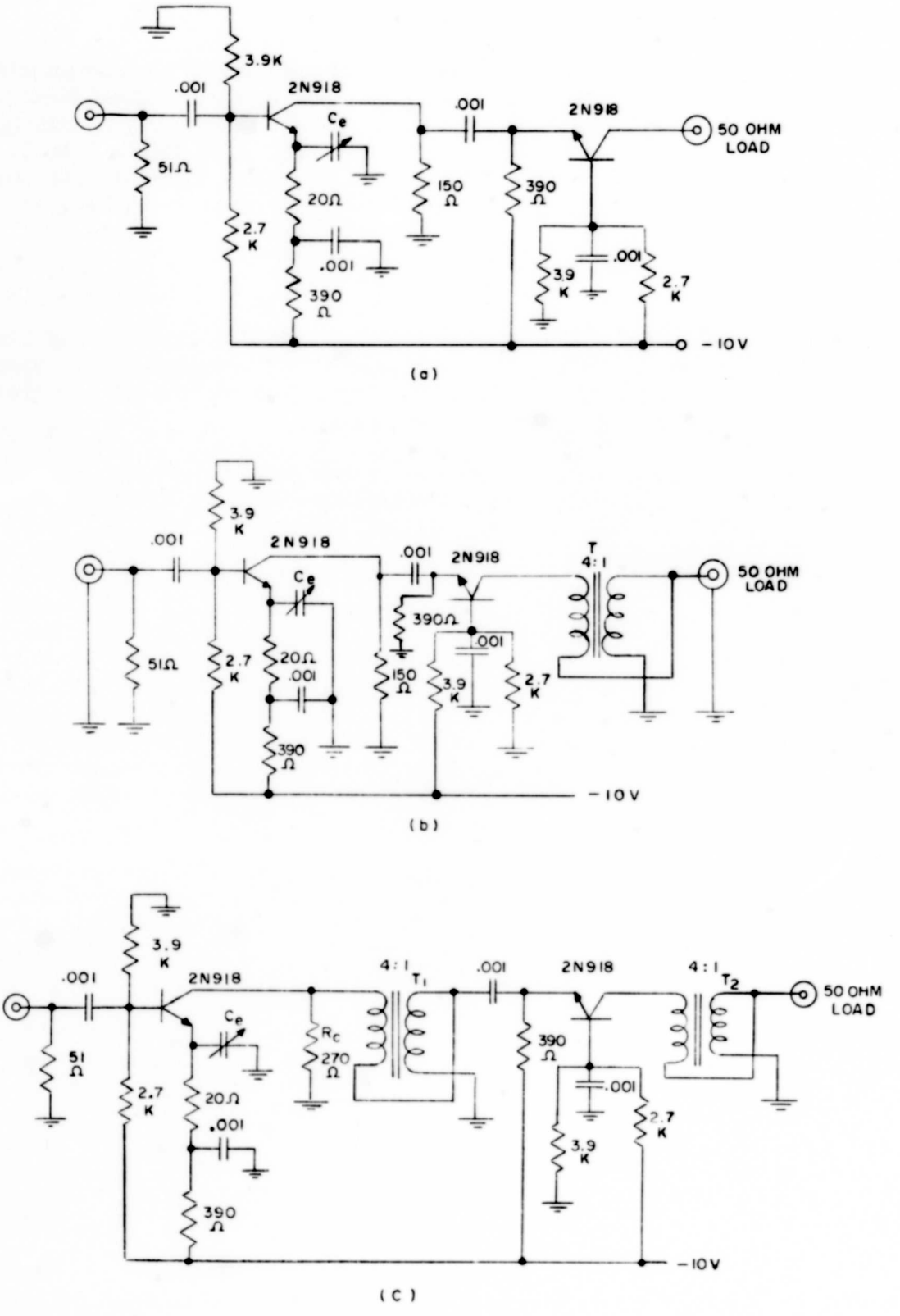

Figure 31. Circuit for Emitter Feedback - Ground Base Wide Band Amplifier

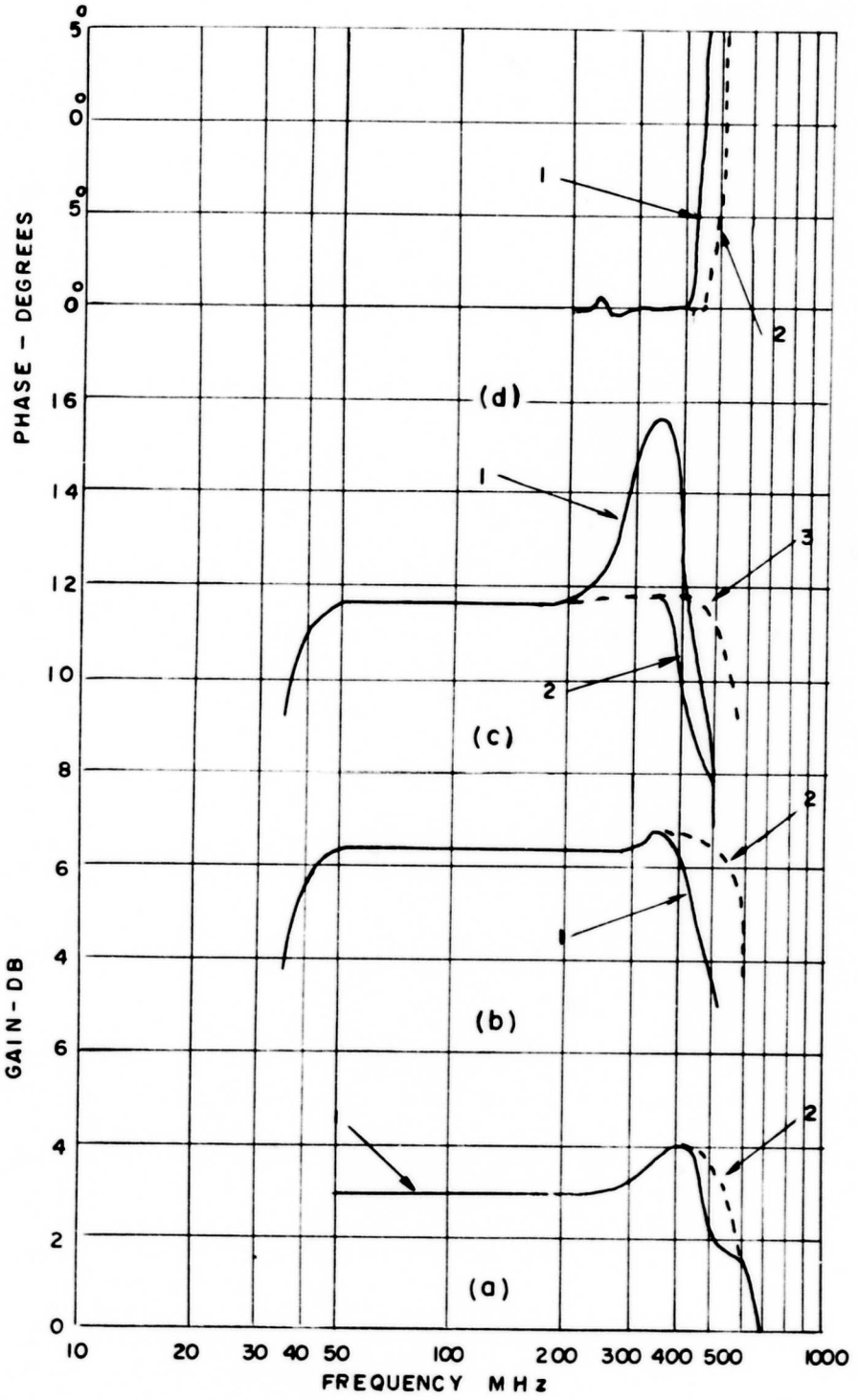

Figure 32. Emitter Feedback - Grounded Base Gain-Phase Versus Frequency Response

grounded base amplifier and the output capacitance of the first stage, a large resonance peak occurs. Also, this is due in part to the fact that the transformer should be properly matched at its primary and secondary, which is not the case here. The addition of a shunting impedance across the primary damped out this peak as shown by curve 2 of Figure 32(c). A value of R_c = 270 ohms was used. Its value was not found to be critical. The addition of C_e again raised the high-frequency response to that shown by curve 3 of 32(c).

The use of two wideband transformers has increased the amplifier's gain to 11.5 db with a flat response to 450 MHz, 1 db response to 500 MHz, and 3 db response to 540 MHz. The low frequency cutoff is seen to be about 30 MHz. Equation (120) predicts a theoretical maximum gain of 10 db. This configuration appears to have exceeded its theoretical maximum performance. Undoubtedly, this is due to a higher f_t as well as some inductive peaking. Although the addition of the second transformer has increased the gain to its theoretical value, it has resulted in a slight increase in complexity. The transformer provides a closer match between stages, raising the second stage input to 32 ohms from 8 ohms.

The measured power gain bandwidth product, f_{max}, obtained from a single stage grounded base amplifier in Section II.D., Part I, was found to be greater than the calculated maximum value. The reasons for this discrepancy are discussed in that section.

Phase Response

The amplifier phase response of Figure 31(c) is shown in Figure 32(d). Curve 1 was taken with C_e adjusted to yield the maximum flat response as shown by curve 3, Figure 32(c). Note that the phase is linear to within ±0.5 degrees to 400 MHz. The measuring equipment was accurate only down to 200 MHz and the wiggles at 250 MHz are within the accuracy of the phase equipment. Curve 2 was obtained by removing C_e from the circuit. This yielded a linear phase response to 450 MHz although the gain was down about 3 db.

Noise Figure

Noise figure measurements were very inaccurate due to a high IF amplifier noise figure used after the wideband amplifier. The noise figure of the wideband amplifier was estimated to be about 15 db. The transistors used are specified in the data sheet to have a 6 db noise figure. The circuit was not designed to minimize the noise figure and from consideration of the input circuit a high noise figure is understandable. For this reason the noise figure measurement was dropped.

2. Emitter Feedback - Collector Base Feedback Amplifier

The schematic diagram for a two transistor cascaded amplifier using an emitter feedback stage to drive a collector-base feedback stage is shown in Figure 33. Here, as in the previous section, the input is terminated into a 51 ohm load due to the relatively high transistor input impedance. The D.C. return for the collector of the first amplifier is through the feedback path of the second amplifier. This eliminates the need for an inductor to ground at this point that can produce resonant peaks. A resistor could be used in place of the inductor but it might tend to load the amplifier. A large value of resistor would result in excessive voltage drop.

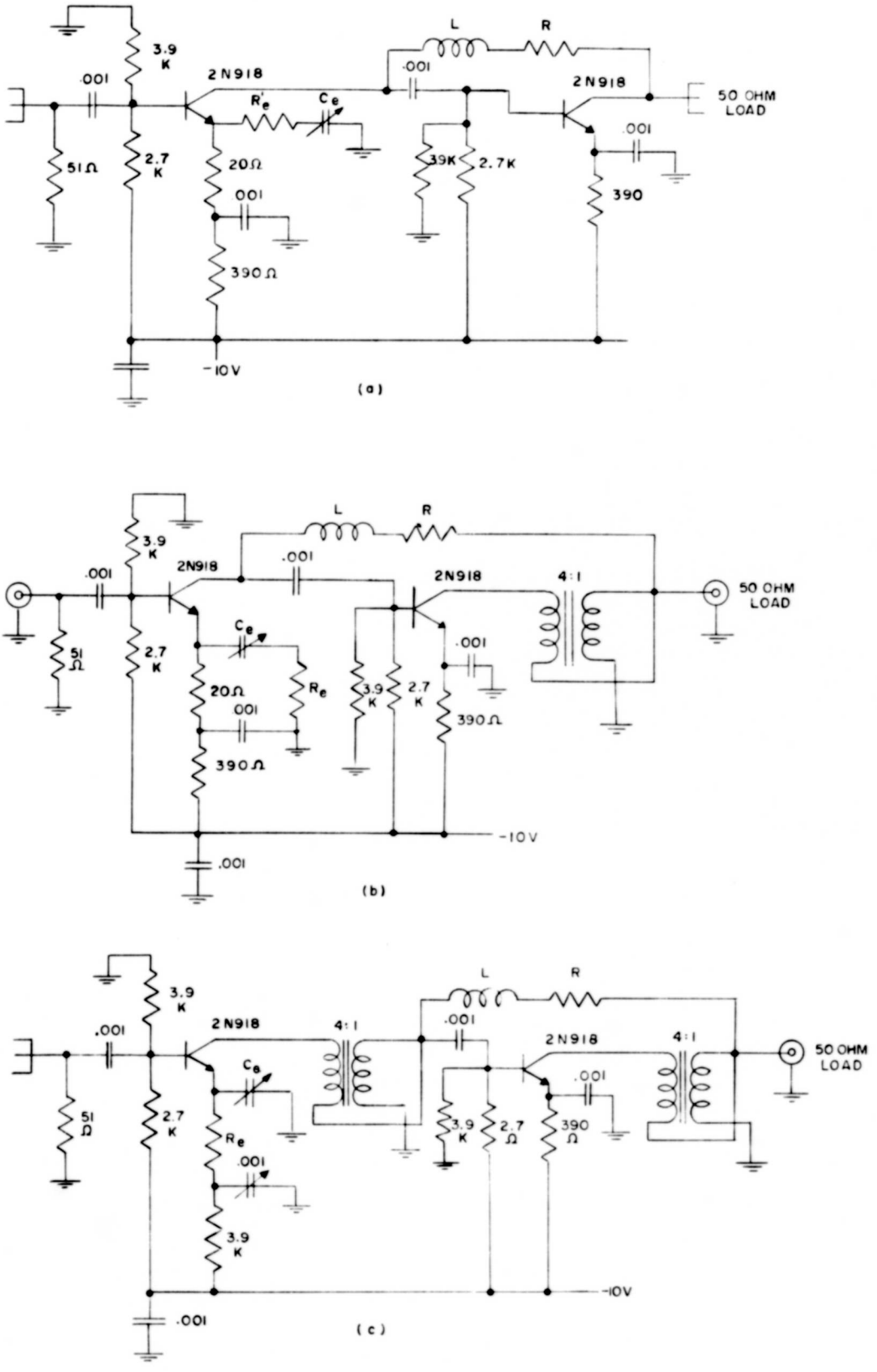

Figure 33. Circuit for Emitter Feedback - Collector Base Feedback Amplifier

In each amplifier configuration tested, a small pot was used in place of R. It was found to be noninductive in comparison with L and provided an easy means of adjustment.

The inductance L was changed by cutting turns off the coil. The only other adjustment was that of R'_e and C_e, the emitter bypass and its series resistance. The value of R'_e is not critical in that once its value is determined, it can vary over twenty percent and have little effect on the results. This is discussed in detail later in this section.

A word is in order at this point about the variation of the amplifier's response as R and L are varied. For a given inductance L, the responses will rise with frequency if R is too small. If R is too large, the response can be made to decrease with frequency. Also, for a fixed R, the response will increase with frequency as L is increased. This, however, results in a lower cutoff frequency. As L is decreased, the response falls off with frequency. Generally, a fixed L is placed in the circuit and R adjusted for the flattest response. As L is increased and R adjusted for the flattest response, the bandwidth decreases and the gain increases. Likewise as L is decreased and R adjusted, the bandwidth increases and the gain decreases.

Too much inductance in either the feedback path or elsewhere in the circuit will often result in a dip in the response at midband like that shown in Figure 34, curve 1. Actually, the problem is not a dip, but that a resonant peak appears near the upper cutoff frequency like that shown by curve 4. If an attempt to flatten the response is made by increasing R, the low frequency end is raised to yield the double peak response of curve 1. This high frequency peak is caused by the stray circuit inductance resonant with the output capacitance of the transistor.

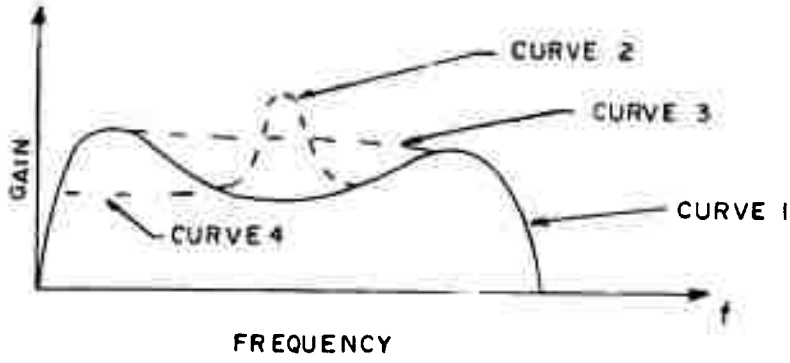

Figure 34. Inductive Effects on Amplifier Response

There are two ways that this response can be flattened out. Sometimes, increasing L will eliminate the problem. However, if the dip is due to internal inductances, such as an inductive input to the second amplifier (usually due to feedback interaction) or an excessively inductive interstage transformer like that shown in Figure 33(c) (see its response in Figure 35(c)), the midband response can be raised by the use of C_e and R'_e. By adjusting C_e, a resonant peak in the amplifier's response

can be produced. The location on the response curve is determined by the value of C_e. The width or Q of this peak can be controlled by placing a resistor R'_e in series with C_e. If this peak is located at the center of the dip (curve 2, Figure 34), and R_e is increased, the amplitude of their peak will decrease as its width increases. A value of resistance can be found to produce the flattest response. (See curve 3, Figure 34.) The emitter bypass is no longer available for high frequency peaking. However, the inductive response (curve 1) is greater than the noninductive flat response would have been. Thus, the increased noninductive response due to C_e will just about equal this inductive response.

The frequency response of the amplifier shown in Figure 33(a) is given by curves 1 and 2 of Figure 35(a). Here the cascaded amplifier is essentially an R-L coupled pair. When the feedback inductance L is zero, the resultant gain is 3.5 db to 450 MHz (0.5 db). The value of feedback resistance required to yield the flattest response was 65 ohms. When C_e was adjusted to produce maximum flatness, the 0.5 db frequency response was increased to above 475 MHz. The 3 db point for both curves is about 500 MHz.

When a 2-1/2 turn inductor was added in the feedback loop and R adjusted for flattest response, the gain was increased to 6 db; however, the 0.5 db frequency response has been substantially reduced to 275 MHz. Adjusting C_e with $R'_e = 0$ yielded too high a Q peak as shown by curve 4. The addition of a 24 ohm resistance in series with C_e extended the response to 430 MHz.

Increasing L to 4-1/2 turns and adjusting R for flattest response yielded a 9 db gain with the 0.5 db point at 235 MHz, as shown by curve 6. With R'_e and C_e properly adjusted, a 0.5 db bandwidth of 330 MHz was obtained (curve 7).

The gain of this amplifier configuration is much easier to control than that of the preceding section. Here a variation of R and L enables a wide range of gain control that was not possible in the preceding amplifier arrangement.

By increasing the output impedance of the second amplifier, the gain can be increased to a point without affecting the bandwidth. To accomplish this increase in gain, a 4:1 wideband impedance transformer was used as indicated in Figure 33(b). The amplifier's response is shown as curve 1, Figure 35(b), where L = 2-1/2 turns. Here it is seen that the gain has been increased from 6 db, curve 3, Figure 35(a), to 11 db with the 3 db point at 435 MHz. The bandwidth has been only slightly reduced, as would be expected from the discussion in Part I. Actually the same result would have been obtained if the transformer had been placed between the two amplifiers in place of the collector of the second stage. The maximum theoretical gain from Equation (120) is 13.6 db.

When identical wideband transformers are placed in both collectors as shown in Figure 33(c), an average gain of 15 db is obtained as shown by curve 1, Figure 35(c). The presence of both transformers has introduced excessive stray inductance which resonates with the transistor's output capacitance appearing as peaks in the response. If the inductance L was added in the feedback loop, the gain would be increased, the bandwidth reduced and the response flattened as shown by curves 1 and 2, Figure 35(d), at 16 db. With C_e adjusted for maximum flatness, the response breaks at 350 MHz with the 3 db point at 400 MHz. Equation (120) predicts a maximum theoretical gain of 15.2 db for this bandwidth. Here optimum performance has been obtained with a minimum of adjustments.

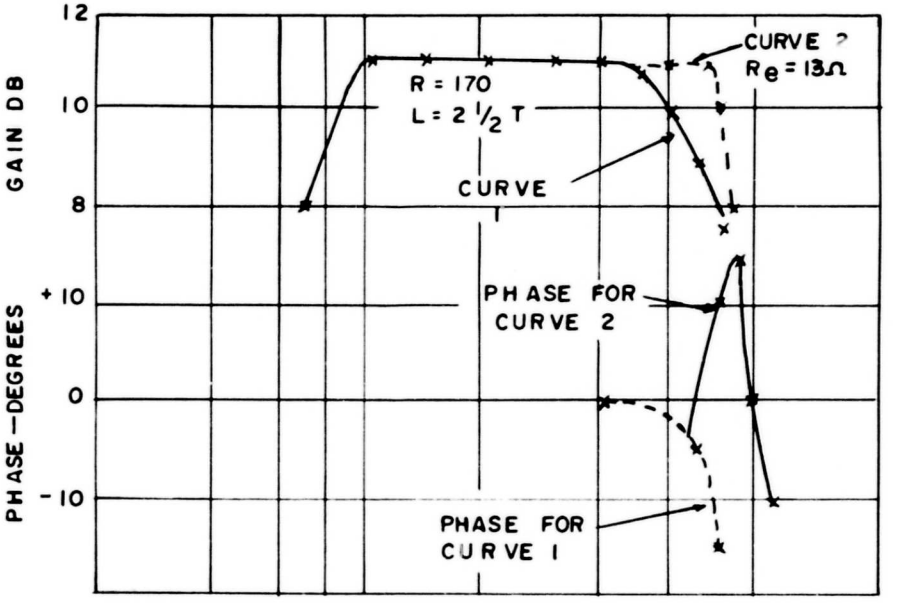

(b)

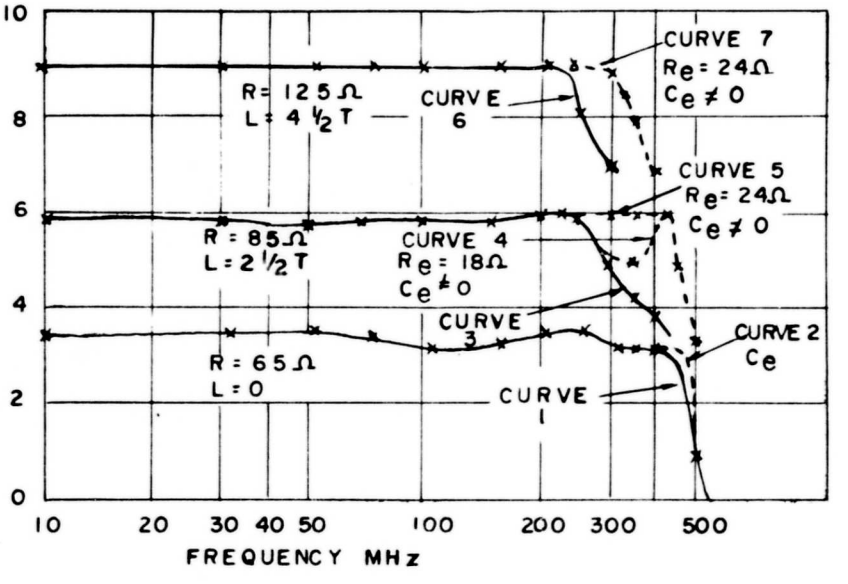

(a)

Figure 35. Emitter Feedback - Collector Base Feedback Gain-Phase Versus Frequency Response

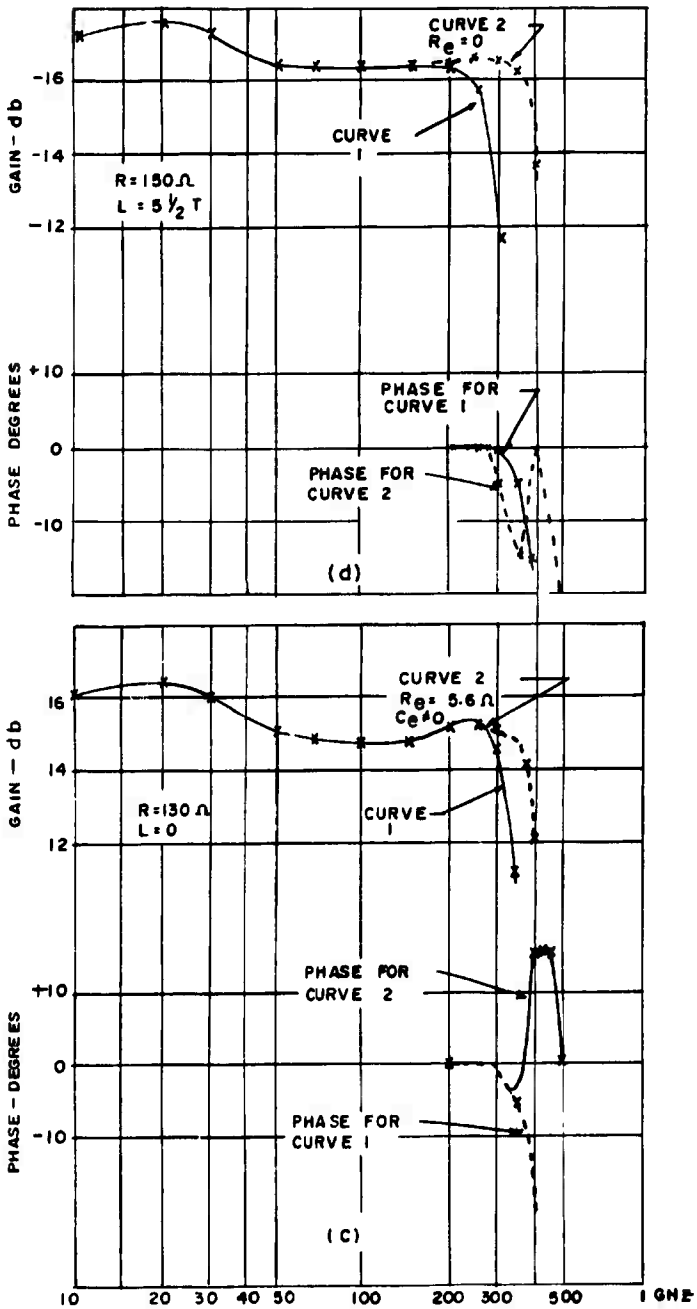

Figure 35. Emitter Feedback - Collector Base Feedback Gain-Phase Versus Frequency Response (Continued)

The low frequency peak is due to a resonance of the bypass in the second stage emitter circuit which does not appear until the interstage coupling transformer is added. The elimination of this peak would require a different type of bypass. Shunting this capacitor does not help to eliminate the peak but does alter its shape.

To indicate the importance of the transistor on the upper cutoff frequency, the two 2N918 transistors of Figure 33(b) were replaced by two Texas Instrument PNP 2N2999 with guaranteed f_t of 1000 MHz. The only changes made to the circuit, other than to reverse the supply polarity, was to readjust L and R. This cascaded amplifier response is shown in Figure 36 for L = 0 and R = 125 ohms. A gain slightly greater than 7 db was obtained out to 800 MHz (0.5 db) with $C_e = 0$. When C_e was adjusted, curve 2 resulted. Here the 0.5 db point has been increased to 850 MHz. The 3 db point occurs at about 875 MHz. Equation (120) predicts a gain of 8.6 db.

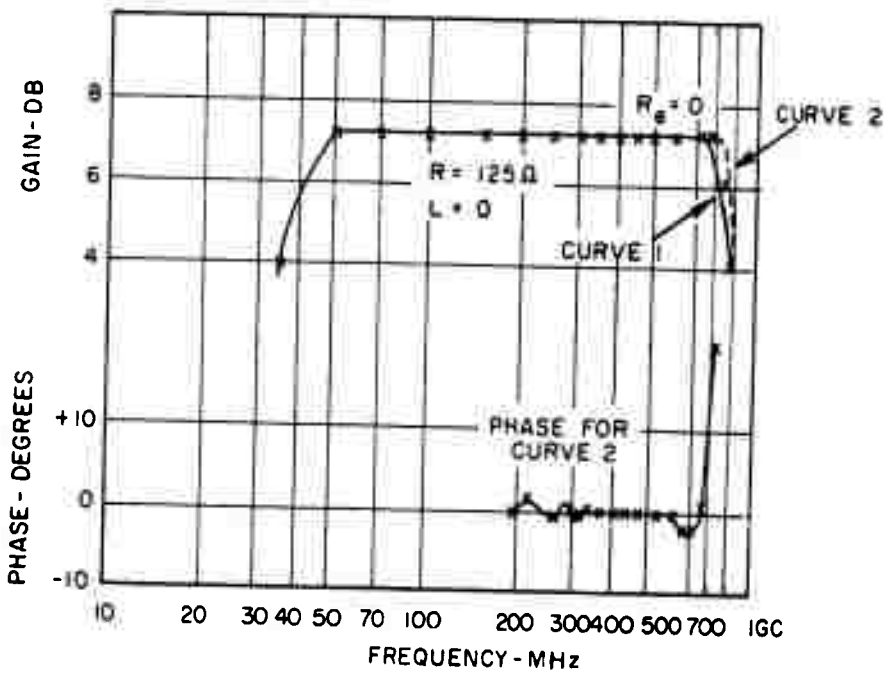

Figure 36. Emitter Feedback - Collector Base Feedback Amplifier Response Using 2N2999 in Configuration of Figure 33(b)

It should be emphasized that the only adjustment made after the amplifier was turned on, other than C_e, was that of R. Viewing the gain response from a sweep generator, R was easily adjusted to yield the response shown.

The phase response for the two settings of C_e is shown in Figure 36 also.

3. Cascading Two Emitter Feedback - Collector Base Feedback Amplifiers

Amplifiers may be cascaded, using the approach advocated here. Two stages, connected as shown in Figure 33(c), were cascaded. The symbol for these cascaded stages is shown in Figure 37. Here the basic building block is the emitter feedback - collector base feedback combination. The basic configuration requires a voltage driving source and its output resembles a low impedance voltage source. Therefore, it is ideal to cascade identical such amplifier combinations with minimum interaction.

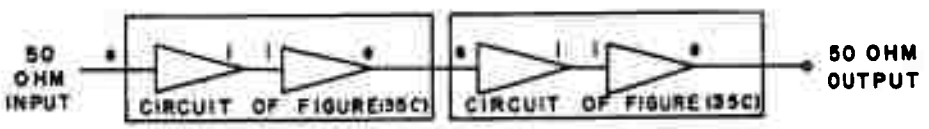

Figure 37. Block Diagram for Four-Stage Cascaded Amplifier

The response of two identical such amplifier combinations is shown in Figure 38(a). Here the 2N918 transistor was used. Note that this response is somewhat better than that shown in Figure 35(d). This difference is due to the wide variation of f_t that exists between transistors of the same type from the same manufacturer. These responses are with C_e adjusted for maximum response.

When these stages were cascaded, the response of Figure 38(c) resulted. Only slight readjustment of R was required. This readjustment was due to the fact that output of the first amplifier pair is terminated directly into the input impedance of the third stage and not into a 50 ohm load which was the case for 38(a). This change in load impedance of the second amplifier also resulted in an increase in gain to 27 db for the over-all amplifier, as compared to the 24 db expected by doubling the gain indicated in 38(a). The two emitter peaking capacitors C_e were not readjusted. The response is seen to be flat to within 0.5 db up to about 475 MHz with a minimum of adjustments. The high frequency wiggles could be further reduced by adjustment of C_e and R_e.

Figure 38(b) shows the resultant phase response for the four cascaded stages.

E. THREE STAGE CASCADED AMPLIFIER

Here it is desired to build a three stage amplifier having a 300 to 400 MHz bandwidth in order to further demonstrate the procedure of Section I.C. The driving source will be a 51 ohm constant voltage generator. The amplifier must drive a 51 ohm cable that is properly terminated across the band. The block diagram for such an amplifier is shown in Figure 39. The above requirements enable us to draw the block shown in Figure 39(a). From Table I and the results from the preceding section, it would be best to use the emitter feedback configuration for amplifier 1. From the preceding sections, amplifier 2 could be either a grounded base or collector-base feedback amplifier. As we have seen, both will perform quite satisfactorily. If emitter feedback stages were used for amplifier 3, a low driving source amplifier

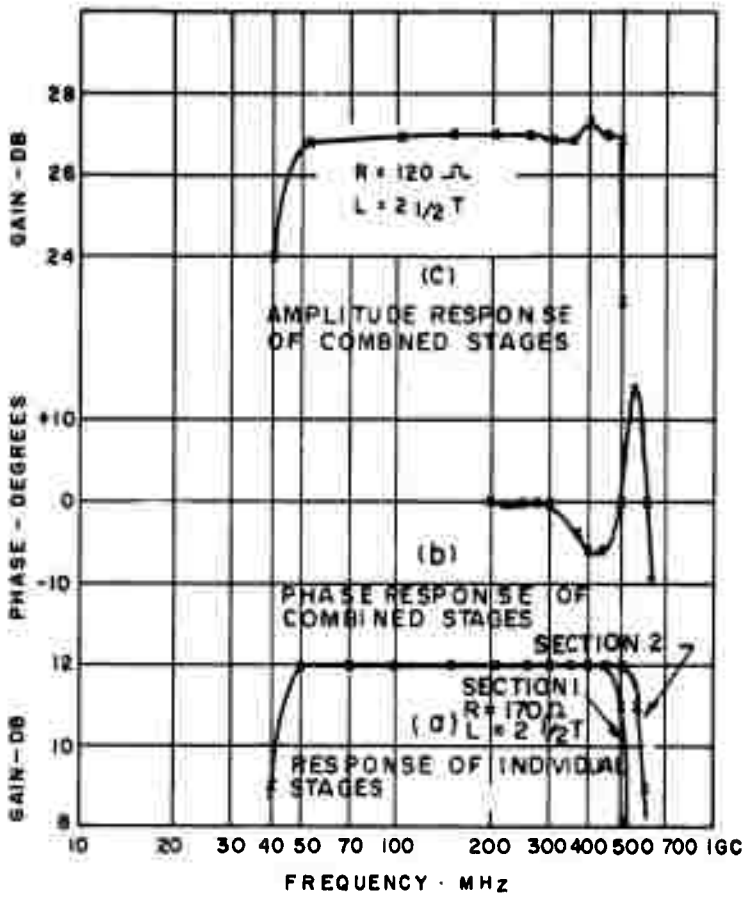

Figure 38. Response of Two Cascaded Emitter Feedback - Collector Base Feedback Stages

would be required by amplifier 2; namely, the collector-base feedback amplifier. If the collector-base feedback amplifier were used for amplifier 3, then the grounded base amplifier would be best suited for amplifier 2. Lastly, if the grounded base configuration were used for amplifier 3, amplifier 2 would require either an emitter feedback or collector-base feedback amplifier.

After consideration of the preceding experimental results and the idea of a current source driving a low impedance, and a voltage source driving a high impedance or constant output impedance, the amplifier configuration of Figure 39(b) was arrived at as the best combination. Here the emitter feedback input stage drives the low input impedance of a grounded base amplifier. The output of this stage is a near ideal current generator, well suited to drive the current sensitive input of the collector-base feedback amplifier used as the third amplifier. The output impedance of this last stage resembles a constant voltage source for driving the 51 ohm output.

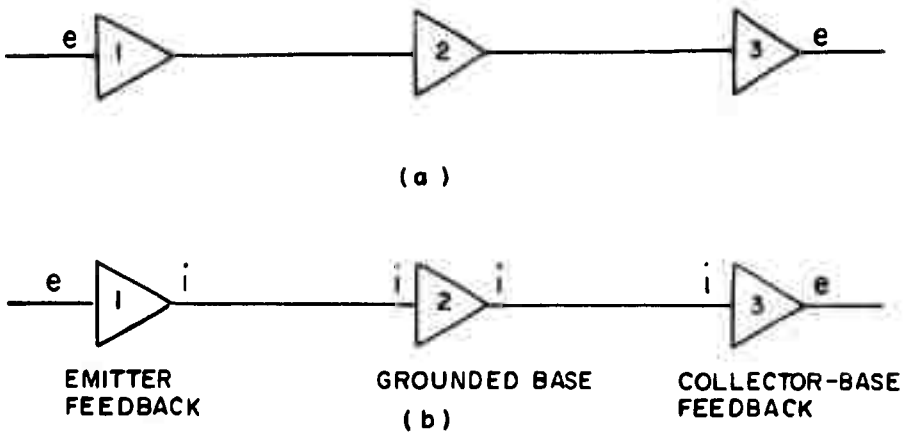

Figure 39. Block Diagram for Three-Stage Cascaded Amplifier

When we consider the power gain obtained by each amplifier, we see that amplifiers 2 and 3 provide substantial gain, i.e.,

$$P_{2\,IN} < P_{2\,OUT} = P_{3\,IN} < P_{3\,OUT}$$

since

$$i_{IN}\, Z_{IN}\,|_2 < i_{OUT}\, Z_{OUT}\,|_2 = i_{IN}\, Z_{IN}\,|_3 < i_{OUT}\, Z_{OUT}\,|_3 \,.$$

Due to the low input impedance that the first stage must operate into (Z_{IN2} = 8 ohms), the power gain of the first stage is only slightly greater than unity. That is

$$i_{IN}\, Z_{IN}\,|_1 \doteq i_{OUT}\, Z_{OUT} \,.$$

The primary function of this first stage is to transform the 51 ohm input down to the low grounded base input impedance without loss of gain or interaction.

The schematic diagram for this three-stage amplifier is shown in Figure 40. Again, because of the high input impedance of the first transistor, the input is terminated into a 51 ohm resistor. Its output is capacitively coupled into the emitter of the grounded base stage. The collector of amplifier 1 is returned to ground through a 150 ohm resistor. Due to the small input impedance to amplifier 2, the first stage gain is slightly greater than unity. Here a 4:1 impedance transformer could be used as in Section II.D.1. and Figure 31(c) to increase the impedance. However, as in the case of Figure 35(c) when the gain is made too high for a fixed bandwidth, interaction occurs and much more time is required to flatten the response for a given bandwidth. Since the purpose of this report is to demonstrate cascaded stages with minimum adjustments, only a single transformer was used. The single transformer was placed in the third amplifier stage and the second transformer was omitted. An increase in gain of about 3 to 5 db is obtained by use of a second transformer but the adjustment problems are compounded.

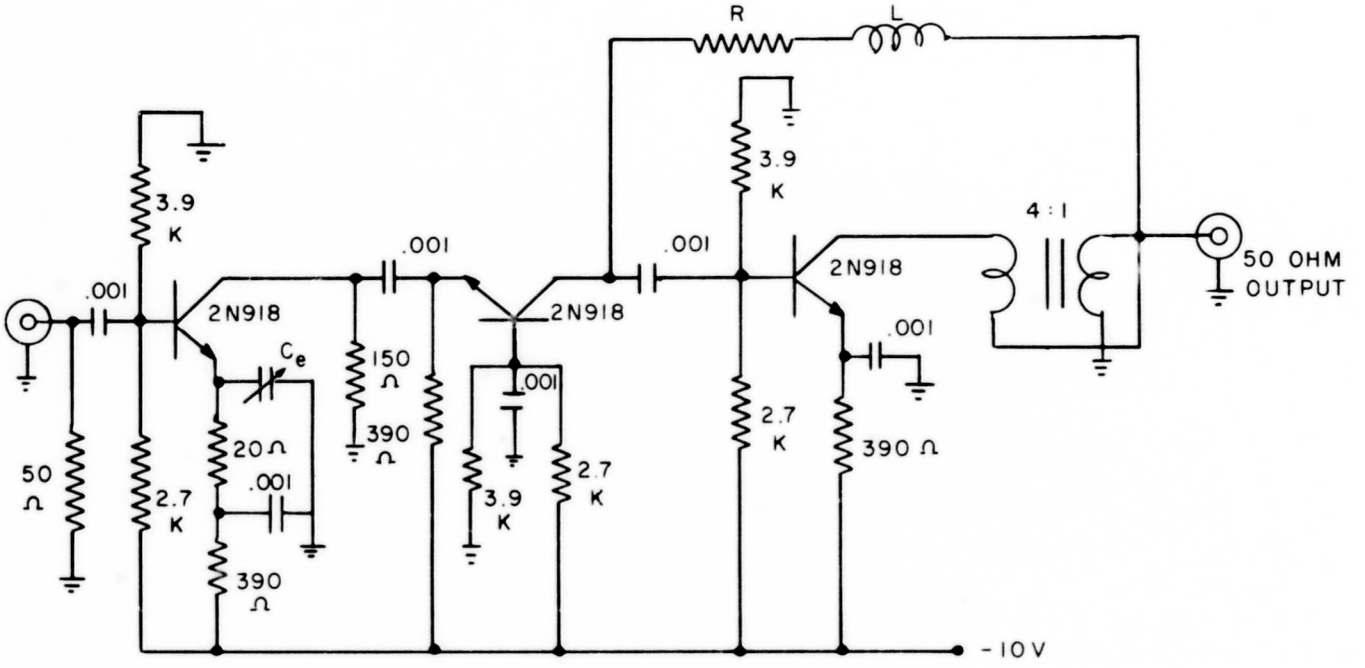

Figure 40. Three-Stage Cascaded Amplifier

The high impedance output of the grounded base drives the current-sensitive collector base feedback amplifier. The collector D.C. return to ground for the second stage is obtained through the third stage feedback path. A 4:1 impedance transformer is placed in the collector of amplifier 3 to raise the load impedance. Since the 51 ohms are fairly constant with frequency we can come closer to matching the collector impedance with minimum gain variation. Note that the feedback drive is taken from the low impedance side of the transformer. This places the transformer within the loop to yield a better response. Also we do not load the collector any more than is necessary. Practice has indicated that more gain and a flatter response is obtained by this connection.

The response obtained from this cascaded amplifier configuration is given in Figure 41. To obtain the response of curve 1, only two adjustments were made. The feedback resistor R was adjusted for flattest response with no feedback inductance ($L = 0$), and C_e was adjusted to peak the high end. Very little capacitance was required for C_e. The phase response is quite linear. The high frequency peak in the amplitude response is due to stray inductances present in the transformer and input of the grounded

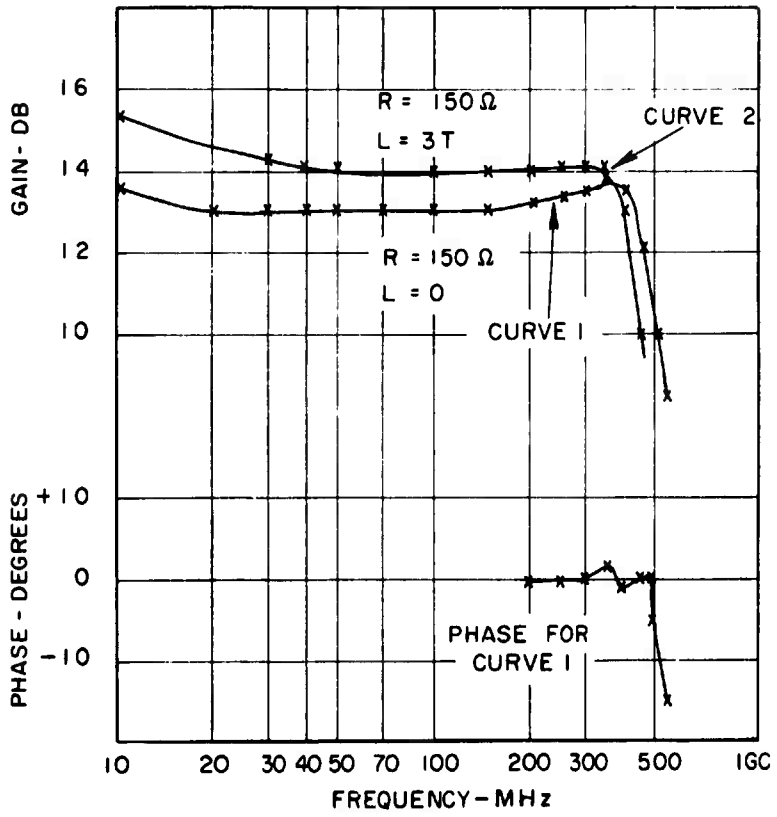

Figure 41. Amplitude and Phase Response for Three-Stage Cascaded Amplifier

base amplifier. The addition of three turns in the feedback loop is sufficient to flatten the gain to 14 db, but because of the increase in gain, the bandwidth has dropped, as seen by curve 2, to 440 MHz. The low frequency peak is again due to the emitter by-pass resonance of the third amplifier. A further increase in bandwidth is realized only by the use of higher frequency transistors. Equation (120) predicts a maximum gain of about 20 db. The experimental results are somewhat below this. This reduced gain is due to use of the grounded base stage which introduces little gain. In fact, if we calculate the theoretical gain assuming no gain in the second stage, a value of 13.5 db is obtained which is close to that measured.

F. CASCADING THREE IDENTICAL THREE-STAGE AMPLIFIERS

Three identical such cascaded amplifiers were built for another project and each displayed characteristics similar in both amplitude and phase. There was a slight variation in gain and bandwidth between stages. These amplifier chains were cascaded as indicated by the block diagram of Figure 42. The results are plotted in Figure 43. Due to a transistor having a low f_t, in one of the three cascaded chains, its response started to drop about 300 MHz, thus producing the early high frequency roll off in Figure 43. In this case, amplifier 3 of each cascaded chain was terminated

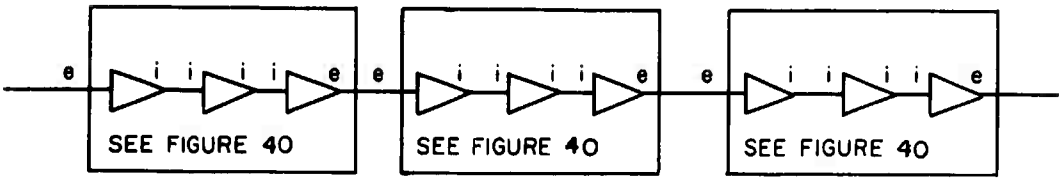

Figure 42. Block Diagram for Nine-Stage Cascaded Wideband Amplifier

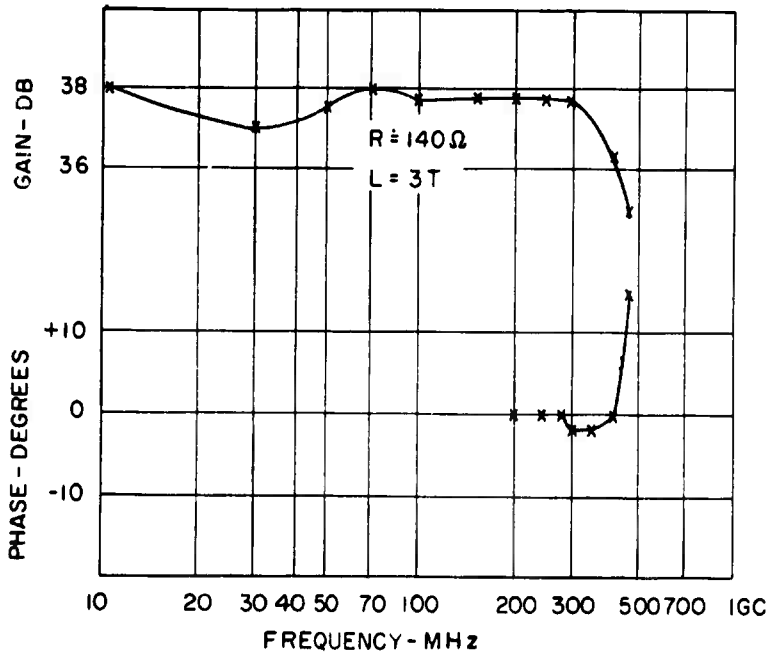

Figure 43. Amplitude and Phase Response for Nine-Stage Cascaded Amplifier

into the 51 ohm load of the following chain. Each three-amplifier chain was adjusted for flattest response. The three chains, each chain consisting of three amplifiers, were connected through 51 ohm cables to form the resultant nine amplifier cascaded chain. A gain of about 38 db with a 3 db bandwidth of 450 MHz was measured.

The low frequency dip is due to the various emitter bypass resonances. However, no attempt was made to reduce this as it was felt to be partly a component problem and partly a layout problem. Although greater gain or bandwidth might be possible with a different configuration, the point here is the ease with which the adjustments were made.

III. DESCRIPTION OF MEASUREMENT TECHNIQUES AND ASSOCIATED EQUIPMENT

A. AMPLITUDE RESPONSE MEASUREMENTS

The technique and equipment used to measure the amplitude response of the wideband amplifiers is shown in Figure 44. A photograph of the test and associated equipment is shown in Figure 45.

In order to adjust the amplifier's wideband amplitude response, the setup of Figure 44(a) was used. A Jerrold sweep generator model 900B was used to provide a swept C.W. signal over the desired band. This sweep generator has a built-in 51 ohm wideband detector, model D-50. The input VSWR was below 1.05. The detected output was displayed on an oscilloscope whose horizontal sweep was driven from the Jerrold sweep generator.

This generator has a wide and narrow band sweep mode. For the application here, only the wideband mode was used. In this mode, the generator is capable of sweeping from 0 to 400 MHz in a single sweep, with an internal crystal marker generator. The marker generator places marks on the sweep display at 1, 10 and 100 MHz intervals. Above 400 MHz the sweepwidth is only about 200 MHz; however, the center frequency of this lower sweep width can be varied up to 1000 MHz.

The output of this generator is dependent on proper termination. The inputs to all amplifiers were terminated with a 51 ohm resistor. Since at higher frequencies the transistor input impedance drops substantially, a 10 db pad was used between the generator and amplifier. Only a slight change in response was noted, however, when this pad was removed. The recommended coaxial cables (RG 58 A and C) were used during each test.

When the generator is connected directly into the detector, the response of the instrument over the 400 MHz sweep range is not flat. Over this frequency range the amplitude varies by about 2 db. A photograph of this instrument's response is shown in Figure 46. This variation is due to both ripple and a general downward slope with frequency. Above 400 MHz, where a 200 MHz wide sweep is used, the response is flat to within 0.5 db.

In order to use the wide sweep in the 0 to 400 MHz range, the generator's response was traced on the scope display. The amplifier's response was then compared with this reference.

This measurement technique was used to adjust the wideband amplifier's response for maximum flatness. First the low and midband adjustments were made, i.e., adjustment of R, L and R_e of Figure 40. If the high frequency response was above 400 MHz, the generator's frequency range was changed to the 300 to 1000 MHz (200 MHz sweepwidth) range. The final adjustment was that of C_e.

A more accurate technique was used to obtain the amplitude plots that are given in this report. For these measurements, the setup of Figure 44(b) was used. Here the sweep width of the generator was reduced to zero. The wideband amplifier's output was measured by a Hewlett-Packard Model 411A radio frequency millivoltmeter. This meter has a typical frequency response of 0.5 db from 0.5 to 1000 MHz. Most

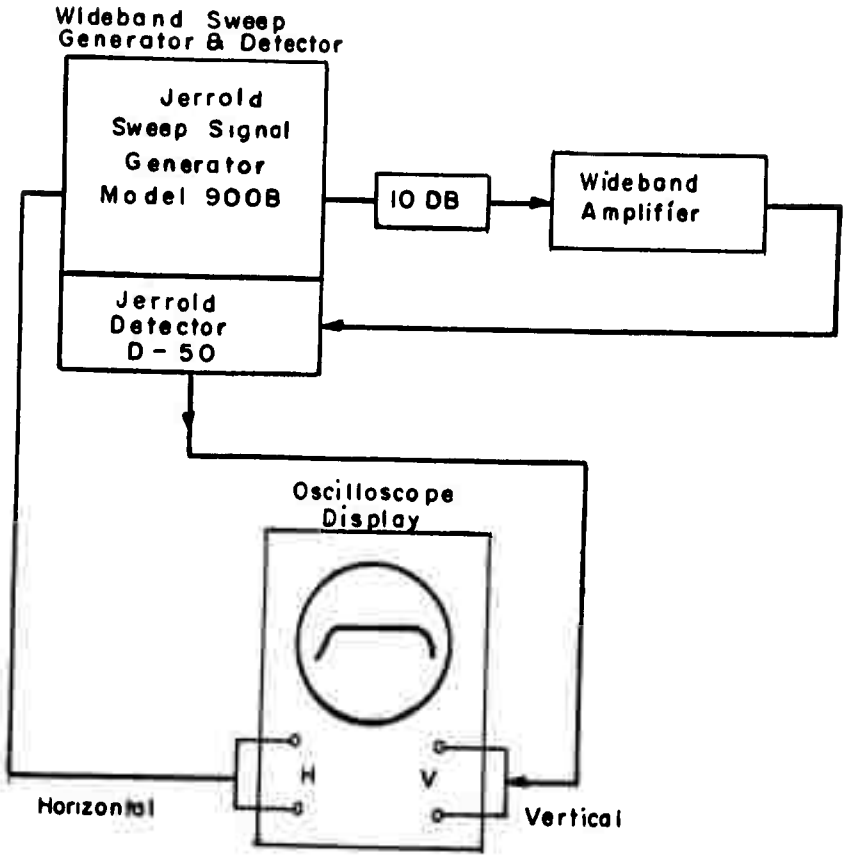

(a)

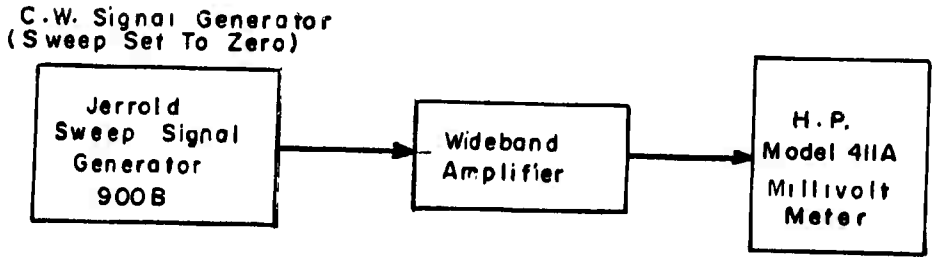

(b)

Figure 44. Amplitude Measurement Technique

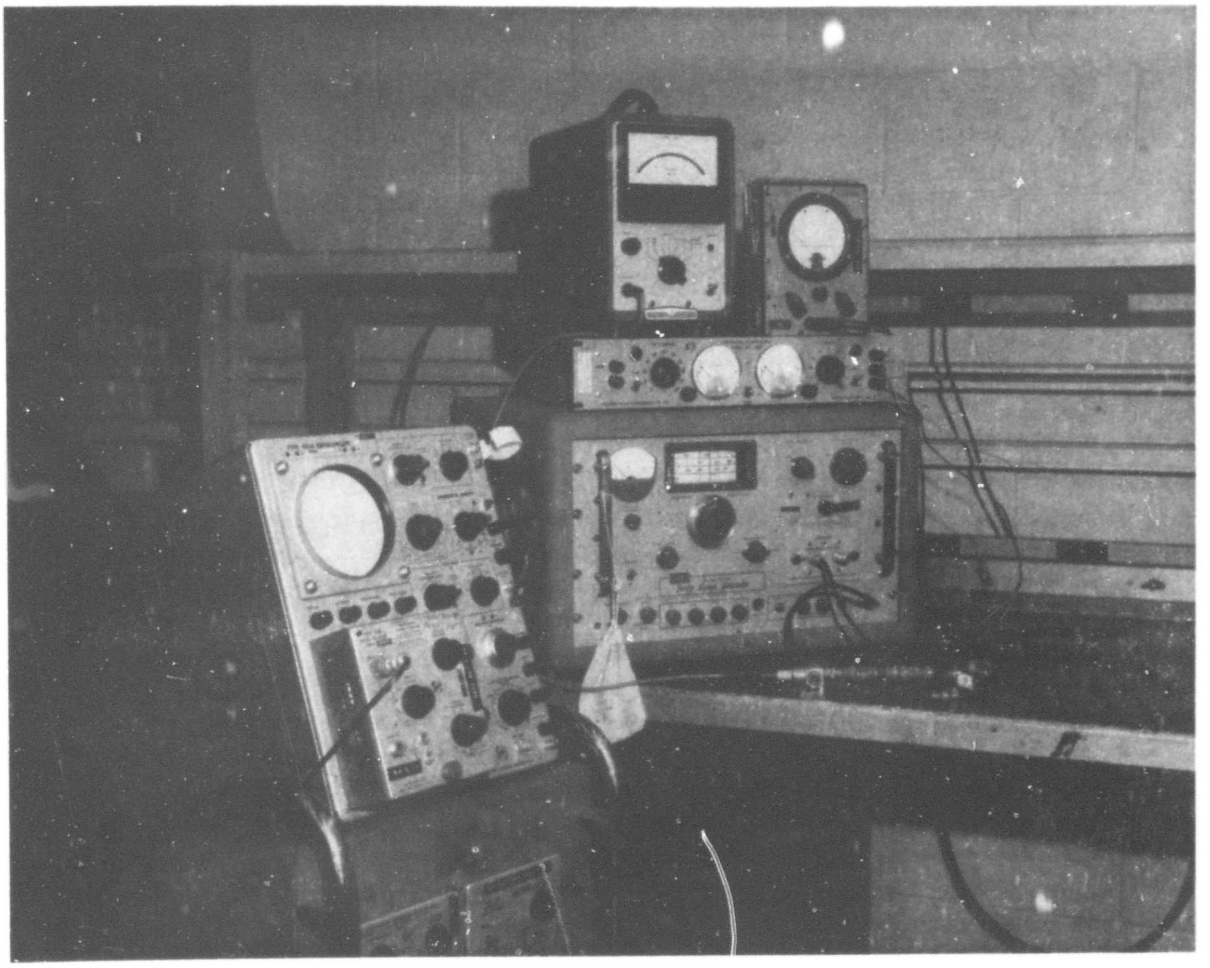

Figure 45. Photograph of Test Equipment

amplitude response measurements were taken at 10, 50, 100, 150, 200, 250, 300, 350, 400, 450, 500 and 550 MHz. At each frequency, the generator's output level was first measured by removing the amplifier. The amplifier was then placed in the circuit and the gain determined.

The power supply used was an Electronic Measurements Co., Inc., transistor, Power Supply Model No. 212A which is variable from zero to 100 volts.

B. PHASE RESPONSE

A block diagram of the phase measuring equipment is shown in Figure 47. A photograph of the test equipment setup is shown in Figure 48.

The phase measuring system consisted of a Rantec Model ET 110U, wideband precision phase system driven from a General Radio type 1209BL variable frequency oscillator. The phase system was linear from 200 MHz to 1000 MHz to within ±3.0 degrees maximum and accurate at fixed frequencies to 0.1 degrees or 5 percent of meter difference reading, whichever is greater. The nice feature of this instrument

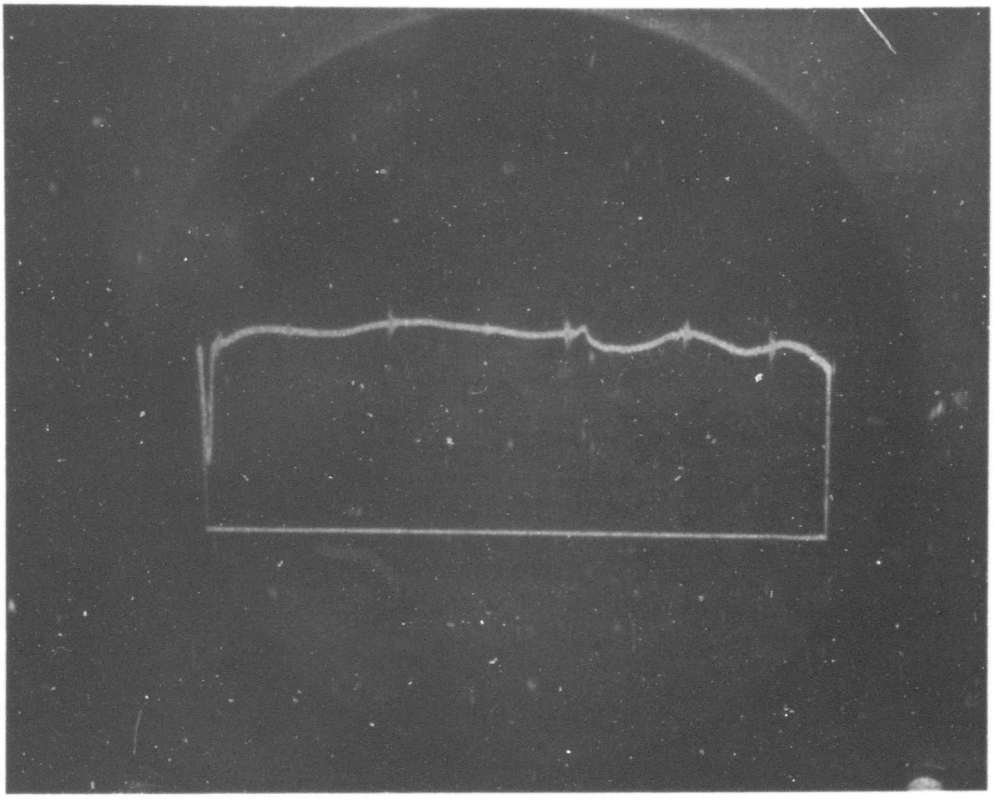

Figure 46. Photograph of Signal Generator's Output

is that the signal generator can be swept in frequency from 200 to 1000 MHz and the resultant phase displayed on an oscilloscope. The reading is to within ±3 degrees of being linear over that range if the reference line supplied with the unit is used.

The basic phase system, as shown in Figure 47, operates as follows. The power from the oscillator is split, part passing through a reference line and part through the unit under test. The phase at the output of these two signal paths is then compared and the resultant phase difference indicated on either a meter or an oscilloscope. The output has a full-scale deflect of either 45 degrees or 5.8 degrees. Various attenuators are located in both paths to attenuate reflected signals.

In order to sweep the General Radio oscillators, a mechanical drive unit is required.

The object of the phase measurement is to determine the phase variation from linearity. This could be measured by two methods. First, if the reference line provided with the equipment is used, a plot of phase versus frequency will yield a line having a slope proportional to the delay through the unit under test. To determine the variation from linear, the slope must be subtracted out to plot this variation. A simpler and faster, but only slightly less accurate, method is to provide a reference line that is exactly the same electrical length as the unit under test. This assumes that the reference line is at least as linear as the desired unit linearity. Therefore, the phase variation from the two signal paths will be a measure of the unit's phase variation from linearity.

This latter technique was used to obtain the phase responses measured in this report. A high quality coaxial cable of the approximate length was placed in the reference line. As the frequency was varied from 200 MHz to about 350 MHz, a line stretcher in the reference path was adjusted for minimum phase variation, i.e., maximum slope cancellation.

The high quality coaxial cable used in the reference line was General Radio Type 874-A2 which had a characteristic impedance of 50 ohms. This cable was obtained from the General Radio Transfer-Function to Immittance Bridge, type 1607-A. The cable had General Radio connectors on each end and was designed to operate up to 1500 MHz.

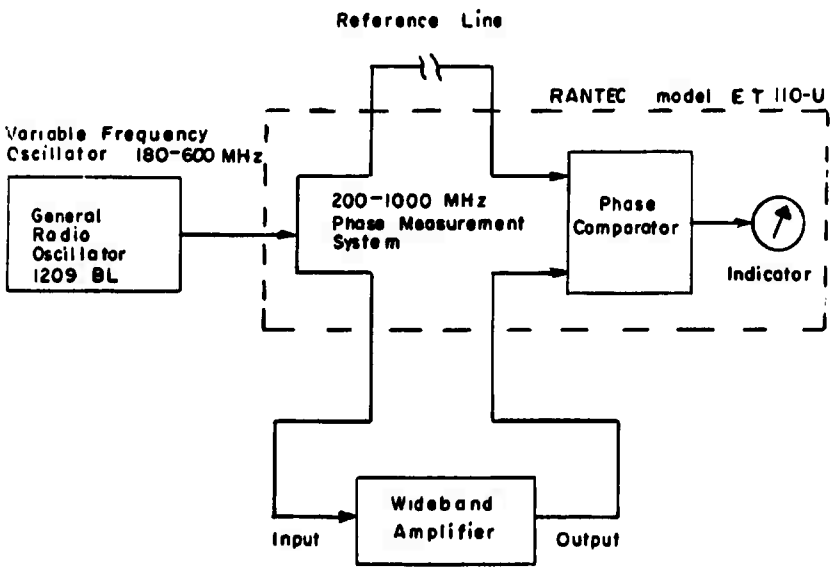

Figure 47. Phase Measurement Technique

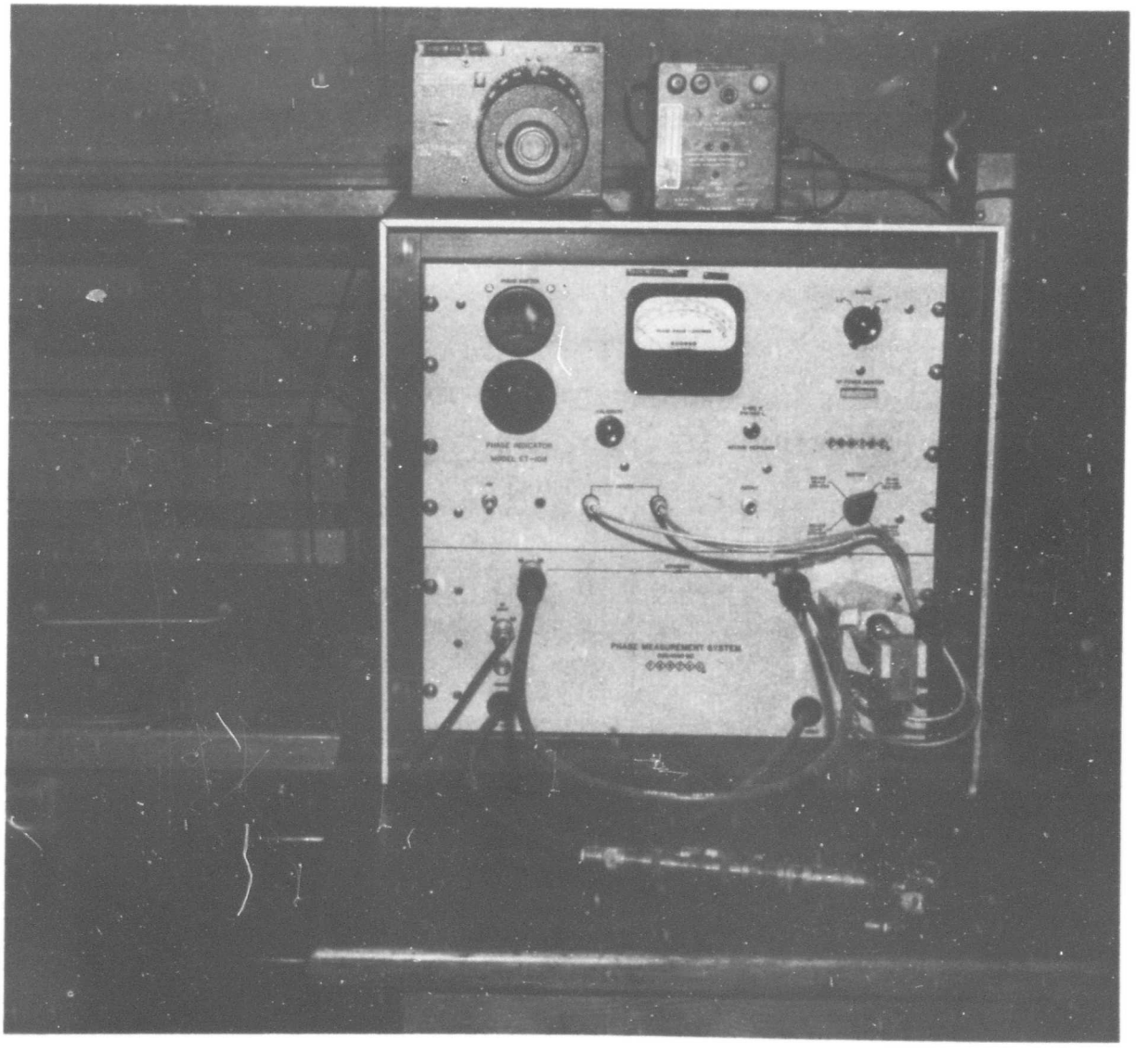

Figure 48. Photograph of Phase Measuring Equipment

IV. CONCLUSIONS AND RECOMMENDATIONS

The purpose of this report was to analyze the basic transistor configurations and present experimental data obtained from single and multiple stage amplifiers.

Part I treated the two basic amplifier configurations; namely, the common emitter and common base configuration. Various techniques for trading gain for bandwidth are covered and test results given. Part II deals with the problems of cascading single stage amplifiers. A technique for designing ultra wideband cascaded amplifiers with minimum interaction and adjustments is discussed.

It has been found that lumped constant components like resistors, capacitors and inductors can be used up to 800 or 900 MHz. Above this frequency, stripline techniques should be used. Due to the decrease with frequency of a transistor's input impedance, it has been found difficult to properly terminate a coaxial cable into such an amplifier. By proper match is meant to maintain a low VSWR (1.1 or better) across a wideband. This appears to be one problem that bears further investigation. The use of stripline techniques here appears justified.

Based on the theoretical and experimental results reported here, it is relatively easy to obtain near optimum performance from high frequency transistors. The critical parameters are current gain-bandwidth product, f_t, and the base-collector time constant, $r_{bb}\ C_{bc}$. Both of these parameters are used to calculate the transistor's maximum power gain-bandwidth product f_{max}. To increase the bandwidth of a transistor amplifier, either single or cascaded, it is nearly necessary to use a transistor with a larger f_{max}.

REFERENCES

1. Joyce & Clarke, Transistor Circuit Analysis, Addison-Wesley Publishing Company, Inc., Reading, Mass., 1962, Ch 8.

2. Dewitt & Rossoff, Transistor Electronics, McGraw-Hill, Inc., New York, 1957.

3. Vasseur, Properties and Applications of Transistors, The Macmillan Co., New York, 1964.

4. Phillips, Alvin B., Transistor Engineering, McGraw-Hill, Inc., New York, 1962, p 165 and Ch 13.

5. Martin, Thomas S., Electronic Circuits, Prentice-Hall, Inc., Englewood Cliffs, N. J., 1955.

6. Thomas, D. E., "Some Design Considerations for High-Frequency Transistor Amplifiers", Bell Telephone Journal, Vol 38, 1959, p 1551.

7. Reddi, V. G. K., Transistor Pulse Amplifiers, Fairchild Semiconductor Application Data, Note 32/2, Sept. 1961.

8. Howell, David W., A Transistor Amplifier with 500 mc Bandwidth, Tech Report No. 1820-1, Stanford Electronics Laboratories, June 1964.

9. Ruthroff, C. L., "Some Broad-Band Transformers", IRE, Vol 47, No. 8, August 1959, pp 1337-1342.

10. Terman, F. E., Electronic & Radio Engineering, McGraw-Hill, Inc., New York, 1955, pp 288-318.

11. Valley, G. E., & Wallman, H., MIT Radiation Laboratory Series, Vol 18, McGraw-Hill, Inc., New York, 1948, pp 71-84.

12. Lynch, W. A., "The Role Played by Derivative Adjustments in Broadband Amplifier Design", Proc. of the Symposium on Modern Network Synthesis, New York, April 16, 17, 18, 1952, pp 193-201.

13. Cherry, E. M., and Hooper, D. E., "The Design of Wideband Transistor Feedback Amplifier", Proc. I.E.E., Vol 110, No. 2, February 1963, pp 375-389.

APPENDIX

DERIVATION OF CONDITION FOR A MAXIMALLY LINEAR PHASE FUNCTION

Here we assume the transfer function of the amplifier is given from Equation (69) as,

$$\frac{e_c}{e_s} = K \frac{\omega_\alpha (p + A)}{p^2 + pB + D} \tag{122}$$

where K is a constant determined by circuit components and transistor parameters. Substituting $j\omega$ for p

$$\frac{e_c}{e_s} = K \frac{\omega_\alpha (A + j\omega)}{D - \omega^2 + j\omega B} \tag{123}$$

The resultant phase shift is given by

$$\theta(\omega) = \tan^{-1} \frac{\omega}{A} - \tan^{-1} \frac{\omega B}{D - \omega^2} . \tag{124}$$

The maximally linear phase function corresponds to a maximally flat time delay response. The time delay response is obtained by differentiating the phase response. That is

$$\tau(\omega) = \frac{d\theta(\omega)}{d\omega} . \tag{125}$$

Lynch[12] has shown how to calculate the conditions for the maximally linear case. First, let us show the approach in terms of a general phase function of the form

$$\theta(\omega) = \tan^{-1}[a_1\omega + a_3\omega^3 + a_5\omega^5 + \ldots]. \tag{126}$$

To obtain the time delay response, we differentiate and arrange the expression to have the form

$$\frac{d\theta(\omega)}{d\omega} = \frac{a_1 + 3a_3\omega^2 + 5a_5\omega^4 + \ldots}{1 + a_1^2\omega^2 + 2a_1a_3\omega^4 + \ldots} . \tag{127}$$

Normalizing the numerator

$$\frac{\theta'(\omega)}{a_1} = \frac{1 + 3\frac{a_3}{a_1}\omega^2 + 5\frac{a_5}{a_1}\omega^4 + \ldots}{1 + a_1^2\omega^2 + 2a_1a_3\omega^4 + \ldots} \quad . \tag{128}$$

To obtain a maximally flat time delay response, we must equate coefficients of like powers. The resulting set of equations among the coefficients yields the condition for a maximally flat time delay response. Thus

$$a_3 = \frac{1}{3}a_1^3; \; a_5 = \frac{2}{15}a_1^5; \; a_7 = \frac{17}{315}a_1^7; \; \ldots \quad . \tag{129}$$

To obtain the conditions by which the phase response of Equation (124) is maximally linear, we differentiate it according to Equation (125) and arrange the resultant expression to have the form of Equation (128).

$$\frac{\theta'(\omega)}{\left[\frac{1}{A} + \frac{B}{D}\right]} = \frac{1 + \frac{\left[\frac{B^2}{A} - \frac{2D}{A} + B + \frac{DB}{A^2}\right]}{\left[\frac{D^2}{A} + BD\right]}\omega^2 + \frac{\left[\frac{1}{A} + \frac{B}{A^2}\right]}{\left[\frac{D^2}{A} + BD\right]}\omega^4}{1 + \left[\frac{B^2}{D^2} - \frac{2}{D} + \frac{1}{A^2}\right]\omega^2 + \left[\frac{1}{D^2} - \frac{2}{A^2D} + \frac{B^2}{A^2D^2}\right]\omega^4 + \frac{\omega^6}{D^2A^2}} \tag{130}$$

The degree of flatness depends on the number of coefficients that can be equated. Equating the first coefficients of both the numerator and denominator reduces to

$$A^3 = \frac{D^2}{3B - B^3/D} \quad . \tag{131}$$

Equating the second coefficients proved to be so complex that further calculation was not attempted.

Unclassified
Security Classification

DOCUMENT CONTROL DATA - R&D

(Security classification of title, body of abstract and indexing annotation must be entered when the overall report is classified)

1 ORIGINATING ACTIVITY *(Corporate author)* RADC (EMATS) Griffiss AFB, N. Y.	2a REPORT SECURITY CLASSIFICATION Unclassified 2b GROUP

3 REPORT TITLE

Single and Cascaded Wideband Transistor Amplifiers

4 DESCRIPTIVE NOTES *(Type of report and inclusive dates)*

In House TR

5 AUTHOR(S) *(Last name, first name, initial)*

PAYNE, John B.

6 REPORT DATE	7a TOTAL NO. OF PAGES	7b. NO. OF REFS
September 1966	105	12

8a CONTRACT OR GRANT NO. N/A b. PROJECT NO. 4506 c. Task No. 450601 d	9a. ORIGINATOR'S REPORT NUMBER(S) N/A 9b. OTHER REPORT NO(S) *(Any other numbers that may be assigned this report)* RADC-TR-66-122

10 AVAILABILITY/LIMITATION NOTICES

Distribution of this document is unlimited.

11. SUPPLEMENTARY NOTES	12. SPONSORING MILITARY ACTIVITY
	Rome Air Development Center (EMATS) Griffiss Air Force Base, New York 13440

13 ABSTRACT

With the realization of high frequency transistors having current and power gain-bandwidth products in the gigacycle region, ultra wideband amplifiers are now possible. This report presents an analysis of the basic high frequency transistor configurations along with experimental data obtained from both single and multiple stage amplifiers having bandwidths ranging from 200 to 800 MHz. Included is a discussion of the important parameters that determine transistors high frequency response along with problems associated with layout and component selection. Various techniques for trading gain for bandwidth are treated and experimentally reported. A new approach for designing wideband cascaded amplifiers that require a minimum of adjustments yet yield near optimum performance is given.

DD FORM 1 JAN 64 1473

Unclassified
Security Classification

Unclassified
Security Classification

14 KEY WORDS	LINK A ROLE	LINK A WT	LINK B ROLE	LINK B WT	LINK C ROLE	LINK C WT
Variable Delay Lines						
Digital Delay Lines						
Wideband						
Transistor Amplifiers						

INSTRUCTIONS

1. ORIGINATING ACTIVITY: Enter the name and address of the contractor, subcontractor, grantee, Department of Defense activity or other organization *(corporate author)* issuing the report.

2a. REPORT SECURITY CLASSIFICATION: Enter the overall security classification of the report. Indicate whether "Restricted Data" is included. Marking is to be in accordance with appropriate security regulations.

2b. GROUP: Automatic downgrading is specified in DoD Directive 5200.10 and Armed Forces Industrial Manual. Enter the group number. Also, when applicable, show that optional markings have been used for Group 3 and Group 4 as authorized.

3. REPORT TITLE: Enter the complete report title in all capital letters. Titles in all cases should be unclassified. If a meaningful title cannot be selected without classification, show title classification in all capitals in parenthesis immediately following the title.

4. DESCRIPTIVE NOTES: If appropriate, enter the type of report, e.g., interim, progress, summary, annual, or final. Give the inclusive dates when a specific reporting period is covered.

5. AUTHOR(S): Enter the name(s) of author(s) as shown on or in the report. Enter last name, first name, middle initial. If military, show rank and branch of service. The name of the principal author is an absolute minimum requirement.

6. REPORT DATE: Enter the date of the report as day, month, year; or month, year. If more than one date appears on the report, use date of publication.

7a. TOTAL NUMBER OF PAGES: The total page count should follow normal pagination procedures, i.e., enter the number of pages containing information.

7b. NUMBER OF REFERENCES: Enter the total number of references cited in the report.

8a. CONTRACT OR GRANT NUMBER: If appropriate, enter the applicable number of the contract or grant under which the report was written.

8b, 8c, & 8d. PROJECT NUMBER: Enter the appropriate military department identification, such as project number, subproject number, system numbers, task number, etc.

9a. ORIGINATOR'S REPORT NUMBER(S): Enter the official report number by which the document will be identified and controlled by the originating activity. This number must be unique to this report.

9b. OTHER REPORT NUMBER(S): If the report has been assigned any other report numbers *(either by the originator or by the sponsor)*, also enter this number(s).

10. AVAILABILITY/LIMITATION NOTICES: Enter any limitations on further dissemination of the report, other than those imposed by security classification, using standard statements such as:

(1) "Qualified requesters may obtain copies of this report from DDC."

(2) "Foreign announcement and dissemination of this report by DDC is not authorized."

(3) "U. S. Government agencies may obtain copies of this report directly from DDC. Other qualified DDC users shall request through _____."

(4) "U. S. military agencies may obtain copies of this report directly from DDC. Other qualified users shall request through _____."

(5) "All distribution of this report is controlled. Qualified DDC users shall request through _____."

If the report has been furnished to the Office of Technical Services, Department of Commerce, for sale to the public, indicate this fact and enter the price, if known.

11. SUPPLEMENTARY NOTES: Use for additional explanatory notes.

12. SPONSORING MILITARY ACTIVITY: Enter the name of the departmental project office or laboratory sponsoring *(paying for)* the research and development. Include address.

13. ABSTRACT: Enter an abstract giving a brief and factual summary of the document indicative of the report, even though it may also appear elsewhere in the body of the technical report. If additional space is required, a continuation sheet shall be attached.

It is highly desirable that the abstract of classified reports be unclassified. Each paragraph of the abstract shall end with an indication of the military security classification of the information in the paragraph, represented as *(TS), (S), (C), or (U)*.

There is no limitation on the length of the abstract. However, the suggested length is from 150 to 225 words.

14. KEY WORDS: Key words are technically meaningful terms or short phrases that characterize a report and may be used as index entries for cataloging the report. Key words must be selected so that no security classification is required. Identifiers, such as equipment model designation, trade name, military project code name, geographic location, may be used as key words but will be followed by an indication of technical context. The assignment of links, rules, and weights is optional.

UNCLASSIFIED
Security Classification