Report 1803

AD 619506

DAVID TAYLOR MODEL BASIN
WASHINGTON, D.C.

DEPARTMENT OF THE NAVY

COPY ____ OF ____
HARD COPY $. 3.00
MICROFICHE $. 0.75
59 P

HYDROMECHANICS

AERODYNAMICS

STRUCTURAL MECHANICS

APPLIED MATHEMATICS

ACOUSTICS AND VIBRATION

HYDRODYNAMIC ASPECT OF PROPELLER DESIGN BASED ON LIFTING-SURFACE THEORY

PART II

ARBITRARY CHORDWISE LOAD DISTRIBUTION

by

Henry M. Cheng

Distribution of this document is unlimited.

HYDROMECHANICS LABORATORY
RESEARCH AND DEVELOPMENT REPORT

DDC
RECEIVED
AUG 25 1965
TISIA E

June 1965 Report 1803

ARCHIVE COPY

HYDRODYNAMIC ASPECT OF PROPELLER DESIGN BASED ON LIFTING-SURFACE THEORY

PART II

ARBITRARY CHORDWISE LOAD DISTRIBUTION

by

Henry M. Cheng

Distribution of this document
is unlimited.

June 1965

Report 1803

TABLE OF CONTENTS

	Page
ABSTRACT	1
ADMINISTRATIVE INFORMATION	1
INTRODUCTION	1
MATHEMATICAL FORMULATION	2
Load Distribution	2
Induced Velocities	4
NUMERICAL COMPUTATIONS	5
RESULTS OF SAMPLE CALCULATIONS	7
Load Distribution Corresponding to Various NACA Mean Lines	7
Angle of Attack	8
Sinusoidal Distribution	9
Supercavitating Propellers	9
Discussion	10
CONCLUDING REMARKS	10
APPENDIX A - PREPARATION OF INPUT DATA	35
APPENDIX B - FORTRAN LISTING OF COMPUTER PROGRAM	37
REFERENCES	49

LIST OF FIGURES

	Page
Figure 1 - Coordinate System	12
Figure 2 - Coordinate System in Projected Plane and Regions of Integration	13
Figure 3 - Chordwise Coordinate Systems	14
Figure 4 - Camber Lines for a Rectangular Propeller Blade with Various Chordwise Load Distributions Corresponding to NACA a = 1.0, 0.8, 0.6, 0.4, and 0.2 at $C_{\ell_i} = 1.0$	15
Figure 5 - Camber Distributions at r/R = 0.7 of Propellers 3916A, 3916D, 3916E, 3916F, and 3916G	16

Page

Figure 6 - Relative Camber Distributions of Three-Dimensional Blades (Symmetrical and Skewed) and NACA Two-Dimensional Airfoil with Various Chordwise Load Distributions Corresponding to NACA a = 1.0, 0.8, 0.6, 0.4, and 0.2 at r/R = 0.25 and 0.3 17

Figure 7 - Relative Camber Distributions of Three-Dimensional Blades (Symmetrical and Skewed) and NACA Two-Dimensional Airfoil with Various Chordwise Load Distributions Corresponding to NACA a = 1.0, 0.8, 0.6, 0.4, and 0.2 at r/R = 0.5 and 0.7 18

Figure 8 - Relative Camber Distributions of Three-Dimensional Blades (Symmetrical and Skewed) and NACA Two-Dimensional Airfoil with Various Chordwise Load Distributions Corresponding to NACA a = 1.0, 0.8, 0.6, 0.4, and 0.2 at r/R = 0.9 and 0.95 19

Figure 9 - Comparison of Ideal Angle of Attack, Symmetrical versus Skewed Propeller Blade, for Various Chordwise Load Distributions Corresponding to NACA a = 1.0, 0.8, 0.6, 0.4, and 0.2 20

Figure 10 - Comparisons of Camber Distributions due to Angle of Attack of a Rectangular Blade and a Three-Dimensional Propeller (3916J) with a Two-Dimensional Flat Plate 21

Figure 11 - Comparisons of Induced Normal Velocities and Camber Distributions, Uniform versus Sinusoidal Chordwise Loading 22

Figure 12 - Comparisons of Rectangular Supercavitating Blades with Various Chordwise Load Distributions at Zero Cavitation Number 23

LIST OF TABLES

Page

Table 1 - Calculated Induced Velocities and Camber Distributions for Propeller 3916D, a = 0.8 24

Table 2 - Calculated Induced Velocities and Camber Distributions for Propeller 3916E, a = 0.6 25

Table 3 - Calculated Induced Velocities and Camber Distributions for Propeller 3916F, a = 0.4 26

Table 4 - Calculated Induced Velocities and Camber Distributions for Propeller 3916G, a = 0.2 27

Table 5 - Calculated Camber Distributions for Propellers 3917A, 3917D, 3917E, 3917F, and 3917G 28

Page

Table 6 - Comparison of Ideal Angle of Attack, Symmetrical and Skewed Blades, with Two-Dimensional Data 29

Table 7 - Calculated Induced Velocities and Camber Distributions for Propeller 3916J, Chordwise Load Distribution Corresponding to Angle of Attack 30

Table 8 - Calculated Induced Velocities and Camber Distrubitions for Propeller 3916K, Sinusoidal Chordwise Load Distribution 31

Table 9 - Calculated Induced Velocities and Camber Distribution for a Rectangular Supercavitating Blade at Zero Cavitation Number with Tulin-Burkhard 2-Term Chordwise Load Distribution 32

Table 10 - Calculated Induced Velocities and Camber Distribution for a Rectangular Supercavitating Blade at Zero Cavitation Number with Johnson 3-Term Chordwise Load Distribution 33

Table 11 - Calculated Induced Velocities and Camber Distribution for a Rectangular Supercavitating Blade at Zero Cavitation Number with Johnson 5-Term Chordwise Load Distribution 34

NOTATION

A_0	Coefficient for loading due to angle of attack in Equation [I]
A_1	Area of a lifting surface
A_2	Area of the helical surface behind the trailing edge of a lifting surface extended to infinity
A_3	Area between a superimposed lifting line and the trailing edge
A_n	Coefficients for loading due to sine series in Equation [I]
a	Fraction of the chord from leading edge over which loading is uniform
a_n	Coefficients as defined in Equation [17] of Reference 2
b_n	Coefficients as defined in Equation [21] of Reference 2
C_0	Coefficients as defined in Equation [I]
C_ℓ	Section lift coefficient
C_m	Ordinate of mean line
D	Diameter of propeller
$\overline{dr}$	Length vector of an elementary bound vortex line on a lifting surface; $\overline{dr}/\lvert dr\rvert$ is a unit vector tangent to the bound vortex line
$\overline{ds}$	Length vector of an elementary free vortex line; $\overline{ds}/\lvert rd\phi\rvert$ is a unit vector tangent to the free vortex line
J_s	Advance coefficient based on ship velocity
k^{ba} k^{bt}	Kernel functions, Equations [VIa] and [VIb]
k^{fa} k^{ft}	Kernel functions, Equations [VIc] and [VId]
L	Chordwise coordinate of any point with respect to reference line
L_ℓ	Chordwise coordinate of leading edge
L_t	Chordwise coordinate of trailing edge
L_T	Chord length
n	Revolutions per unit time
P	Point on lifting surface at which mean line is sought

p	Pitch-diameter ratio
$\bar{R}$	Distance vector between two points
r	Radial coordinate
r_h	Radial coordinate of hub
r_o	Radial coordinate of point P
u_a, u_t	Nondimensional axial and tangential components, respectively, of induced velocity from lifting-line calculation based on ship velocity
V	Nondimensional inflow velocity based on ship speed
$\overline{V_B}$	Induced velocity vector at point P due to radial bound circulation
V_{ba}, V_{bt}	Axial and tangential components of $\overline{V_B}$
$\overline{V_F}$	Induced velocity vector at point P due to free circulation
V_{fa}, V_{ft}	Axial and tangential components of $\overline{V_F}$
$\overline{V_L}$	Velocity vector at a lifting line induced by trailing free vortex sheets
$\overline{V_P}$	Total induced velocity vector at point P
$\overline{V_{PL}}$	Total induced velocity vector at point P relative to $\overline{V_L}$
V_s	Ship velocity
V_x	Nondimensional local longitudinal velocity based on ship velocity
$\bar{v}$	Nondimensional induced velocity
v_a, v_t	Nondimensional axial and tangential components, respectively, of induced velocity v based on ship velocity
v_n	Nondimensional induced downwash at point P normal to helical chord line based on ship velocity
v_{ba}, v_{bt}	Axial and tangential components of $\overline{V_B}$ within a strip between r_1 and r_2
v_{fa}, v_{ft}	Axial and tangential components of $\overline{V_F}$ within a strip between r_1 and r_2
x, y, z	Cartesian coordinates
x	Chordwise coordinate
w_x	Local wake fraction

y	Radial coordinate as defined in Equation [17]
Z	Number of propeller blades
α_i	Ideal angle of attack
β	Advance angle
β_i	Hydrodynamic pitch angle
Γ	Nondimensional circulation = circulation $/\pi D V_s$
$\Gamma(r)$	Nondimensional bound circulation distribution along a lifting line
$\Gamma_c(r)$	Nondimensional free circulation distribution on free vortex sheet trailing a lifting line or a lifting surface
$\Gamma_f(r,\theta)$	Nondimensional free circulation distribution
$\Gamma_r(r,\theta)$	Nondimensional bound circulation distribution on a lifting surface
$\Gamma_\theta(r,\theta)$	Nondimensional free circulation distribution on a lifting surface
γ	Circulation per unit angle $= \dfrac{\Gamma(r)}{\theta_T}$
δ_0	Half width of a strip between r_1 and r_2
θ	Angular coordinate $= L \cos \beta_i / r$
θ_ℓ	Angular coordinate of leading edge
θ_0	Angular coordinate of point P
θ_t	Angular coordinate of trailing edge
θ_T	Total chord length in terms of angular coordinate
ξ	$x - x_0$
ϕ	$\theta - \theta_0$
ϕ_ℓ	$\theta_\ell - \theta_0$
ϕ_m	$\phi + 2\pi(m - 1)/Z$
ψ	Chordwise coordinate $\psi = \cos^{-1} [1-2(\theta_\ell - \theta)/\theta_T]$

ABSTRACT

A propeller camber calculation method using Pien's scheme based on lifting-surface theory for any arbitrary, not necessarily uniform, chordwise load distribution is reported. The pertinent mathematical formulations and the relevant numerical computations are presented. Included also are the results of some sample calculations. The instructions for preparation of computer input data and the FORTRAN listing of the computer program are included in the Appendixes.

ADMINISTRATIVE INFORMATION

This work was covered by Subproject S-R011 01 01 of Task 0401 under the Bureau of Ships In-House Independent Research Program.

INTRODUCTION

A propeller camber calculation method based on lifting-surface theory using Pien's scheme[1] was reported recently in Reference 2. In that reference, the problem was limited to the case where the chordwise load distribution is uniform. In the present report, the scope is enlarged to include the problem of nonuniform chordwise distribution. This report is essentially an extension of the previous report, and presents only the revised portions of the formulations necessitated from this extension. For the basic formulations and numerical computations, the reader is referred to Reference 2.

The chordwise load distribution is assumed to be in the form of a combination of three parts: a constant, which represents a uniform loading; an angle of attack term, which represents a flat plate; and a sine series with a finite number of terms, which represents any arbitrary modes of loading. The coefficients of these terms are adjustable so that a desired distribution may be adequately approximated. This affords a considerable degree of freedom in handling cases of various load distributions. This flexibility makes it possible to use the computer program in the design of supercavitating propellers. Provisions are also included

[1]References are listed on page 49.

in the computer program to facilitate the calculation for load distributions corresponding to the commonly used NACA Sections; i.e., the chordwise loading is partially uniform from the leading edge to a point on the chord, and decreases linearly from that point on to zero at the trailing edge.

This report also includes the results of some sample calculations to compare the camber distribution for various shapes of chordwise loading and to demonstrate the usage of the computing program. Instructions for the preparation of input data and the FORTRAN listing of the computer program are given in Appendixes A and B, respectively.

MATHEMATICAL FORMULATION

The basic expressions for the induced velocity components, Equations [11]* and [12], were developed in Reference 2. They were derived without any restrictions as to the type of chordwise loading. From these equations, a set of working formulas, Equations [16] and [19], was derived for the special case of uniform chordwise loading. For the present problem, because the load distribution along the chord is not necessarily uniform, a set of working equations corresponding to Equations [16] and [19] has been developed as follows.

The coordinate systems are those shown in Figures 1 and 2.

LOAD DISTRIBUTION

Let us assume that the bound circulation distribution $\Gamma_r(r, \theta)$ at any point (r, θ) on the blade may be represented by the following equation:

$$\Gamma_r(r, \theta) = \gamma(r) \left[C_o(r) + A_o(r) \cot \frac{\psi}{2} + \sum_{n=1}^{m} A_n(r) \sin n\psi \right] \qquad [I]$$

*Roman numerals denote equation numbers in this report to distinguish from Arabic numerals used in Reference 2.

where $\gamma(r) = \Gamma(r)/\theta_T(r)$; C_o, A_o, and A_n are constant coefficients and, in general, are functions of r; and ψ is a new chordwise coordinate and is defined as shown in Figure 3:

$$\psi = \cos^{-1}\left[1 - \frac{2}{\theta_T(r)}\left(\theta_\ell(r) - \theta\right)\right] \qquad \text{[II]}$$

The first term of Equation [I] represents a constant load distribution; the second, the contribution due to angle of attack; the third, some arbitrary distribution in the form of a sine series with amplitude functions A_n. The first three coefficients must have a relationship of

$$C_o(r) + \frac{\pi}{2}\left[A_o(r) + \frac{1}{2}A_1(r)\right] = 1$$

so that

$$\int_{\theta_t(r)}^{\theta_\ell(r)} \Gamma_r(r, \theta)\, d\theta = \Gamma(r)$$

is satisfied. Equation [I] can be reduced to the uniform load distribution case with a constant density of $\gamma(r)$ if $A_n = 0$ $(n = 0, 1, 2, \ldots m)$ and $C_0 = 1$.

The expression for the free circulation on the lifting surface $\Gamma_\theta(r, \theta)$ was derived in Reference 2 as:

$$\Gamma_\theta(r, \theta) = -\frac{d}{dr}\left[\int_{\theta}^{\theta_\ell(r)} \Gamma_r(r, \theta)\, d\theta\right] dr \qquad \text{[III]}$$

With $\Gamma_r(r, \theta)$ from Equation [I] substituted and with an appropriate change of variable, the integration and differentiation may be carried out in a straightforward manner. The resulting expression is

$$\Gamma_\theta(r, \theta) = -\frac{1}{2}\Big\{\left(C_o(r)\,\Gamma'(r)\right)\left(1 - \cos\psi\right) + C_o(r)\,\Gamma(r)\,\psi'\sin\psi$$

$$+ \left(A_o(r)\,\Gamma'(r)\right)\left(\psi + \sin\psi\right) + A_o(r)\,\Gamma(r)\,\psi'\left(1 + \cos\psi\right)$$

$$+ \frac{1}{2}\sum_{n=1}^{m}\left[\left(A_n(r)\,\Gamma(r)\right)'\left(\frac{\sin(n-1)\psi}{n-1} - \frac{\sin(n+1)\psi}{n+1}\right)\right.$$

$$+ A_n(r)\ \Gamma(r)\ \psi'\Big(\cos\ (n-1)\psi - \cos\ (n+1)\psi\Big)\Big]\Big\}\ dr \qquad \text{[IIIa]}$$

where prime denotes differentiation with respect to r and

$$\psi' = \Big[2\ \theta_\ell'(r) - \theta_T'(r)\ \Big(1 - \cos\ \psi\Big)\Big]\ /\ \Big(\theta_T(r)\ \sin\ \psi\ \Big) \qquad \text{[IIa]}$$

The free circulation in the slipstream $\Gamma_c(r)$ has, of course, the following form:

$$\Gamma_c(r) = -\frac{d}{dr}\left[\int_{\theta_t(r)}^{\theta_\ell(r)} \Gamma_r(r,\theta)d\theta\right] dr$$

$$= -\frac{d}{dr}\ \Gamma(r)\ dr \qquad \text{[IV]}$$

INDUCED VELOCITIES

The equations for the induced velocity components were developed in Equation [16], of Reference 2. They are

$$V_{ba}\ (r_o,\theta_o) = \frac{1}{4\pi}\iint_{A_1} \Gamma_r(r,\phi)\ k^{ba}\ (r_o,\theta_o,r,\phi)\ d\phi\, dr \qquad \text{[Va]}$$

$$V_{bt}\ (r_o,\theta_o) = \frac{1}{4\pi}\iint_{A_1} \Gamma_r(r,\phi)\ k^{bt}\ (r_o,\theta_o,r,\phi)\ d\phi\, dr \qquad \text{[Vb]}$$

$$V_{fa}\ (r_o,\theta_o) = \frac{1}{4\pi}\iint_{A_1} \Big[\Gamma_\theta(r,\phi) + \Gamma'(r)\ dr\Big]\ k^{fa}\ (r_o,\theta_o,r,\phi)\ d\phi \qquad \text{[Vc]}$$

$$V_{ft}\ (r_o,\theta_o) = \frac{1}{4\pi}\iint_{A_1} \Big[\Gamma_\theta(r,\phi) + \Gamma'(r)\ dr\Big]\ k^{ft}\ (r_o,\theta_o,r,\phi)\ d\phi \qquad \text{[Vd]}$$

where the $\Gamma'(r)$ term equals zero for $\phi > 0$,

$$k^{ba}\ (r_o,\theta_o,r,\phi) = -\ r_o\ \sin\ \phi\ /\ R^3 \qquad \text{[VIa]}$$

$$k^{bt}\ (r_o,\theta_o,r,\phi) = \phi\,[p(r)\ \cos\ \phi + p'(r)\ (r_o - r\ \cos\phi)]\ /\ \pi\ R^3 \qquad \text{[VIb]}$$

$$k^{fa}\ (r_o,\theta_o,r,\phi) = r(r - r_o\ \cos\phi)\ /\ R^3 \qquad \text{[VIc]}$$

$$k^{ft}\ (r_o,\theta_o,r,\phi) = p(r)\ (r_o - r\cos\phi - r\phi\sin\phi)\ /\ \pi R^3 \qquad \text{[VId]}$$

$$R = \left[r^2 - 2\ r_o\ r\cos\phi + r_o^2 + (\phi p(r)/\pi)^2\right]^{1/2}$$

where p(r) is hydrodynamic pitch-diameter ratio, and

$$\phi(\psi) = \theta - \theta_o = \theta_\ell(r) - \theta_\ell(r_o) - \frac{1}{2}\left[\theta_T(r)\ (1 - \cos\psi) - \theta_T(r_o)\ (1 - \cos\psi_o)\right]$$

$$d\phi = -\frac{\theta_T(r)}{2}\sin\psi\ d\psi$$

With the bound circulation functions of Equation [I] substituted into Equations [Va] and [Vb], the free circulation functions of Equations [III] substituted into Equations [Vc] and [Vd], and appropriate change of variable from ϕ to ψ, the integrals may be evaluated. Equations [Va] through [Vd] thus evaluated correspond to Equations [16a] through [16d] for the special case of uniform distribution given in Reference 2.

The foregoing discussion constitutes the only change in the formulation involved in extending the problem from the special case of uniform chordwise load distribution to a general case of arbitrary distribution.

NUMERICAL COMPUTATIONS

Since the problem discussed here is essentially an extension of the problem dealt with in Reference 2, the numerical computations are basically identical except that the evaluations of the bound and free circulation functions $\Gamma_r(r,\theta)$ and $\Gamma_\theta(r,\theta)$ have necessarily been modified as indicated in the previous section.

The revised new computer program for the case of arbitrary chordwise load distribution is designated as Applied Mathematics Laboratory Problem XPLA, which is a modification of the program developed for the case of uniform chordwise loading, XPLU. For incorporation of the necessary changes in the computations and for convenience, the program has been broken up into several subroutines. The FORTRAN listing of the program is given in Appendix B.

Let us now examine the assumed load distribution $\Gamma_r(r,\theta)$ of Equation [I]. It is an expression of linear combinations of three parts: a constant, an angle of attack, and a sine series. The coefficients C_0, A_0, and A_n are determined such that the load distribution can be represented adequately. In the determination of these coefficients, the circulation distribution $\Gamma_r(r,\theta)$ at a number of radii is chosen to meet a specific design situation. Due to the considerations of computer storage capacity and of required computing time, the number of m terms of the sine series has to be limited; accordingly, for the present program, m is limited to 5. Although this is considered to be adequate for most cases having smooth distribution curves, it is not an accurate approximation for curves with abrupt load changes; e.g., the commonly used NACA a = 0.8 mean line. For load distributions of this type, the constant loading term in Equation [I] is modified such that it has two parts: the uniform loading portion from the loading edge to the point $x/L_T = a$ on the chord and the linearly decreasing load portion from this point to the trailing edge. The load distributions for $a < 1$ are written as follows:
for $0 \le \psi \le \psi_a = \cos^{-1}(1 - 2a)$,

$$\Gamma_r(r,\psi) = \frac{2}{1 + a}(\gamma)_{1.0}, \qquad \text{[VIIa]}$$

and for $\psi_a \le \psi \le \pi$

$$\Gamma_r(r,\psi) = \frac{1 + \cos\psi}{1 - a^2}(\gamma)_{1.0} \qquad \text{[VIIb]}$$

where $(\gamma)_{1.0} = \gamma(r)$ denotes the load density corresponding to a = 1.0 mean line. Equations [VIIa] and [VIIb] are used in Equations [Va] and [Vb] for the evaluation of the induced velocities due to the bound system.

An expression is then derived for the free circulation density on the lifting surface by substituting the above load distribution in Equation [III]. After carrying out the integration and differentiation, we finally obtain for $0 \le \psi \le \psi_a$

$$\Gamma_\theta(r,\theta) = -\frac{1}{1 + a}\left[\Gamma'(r)\,(1 - \cos\psi) + \Gamma(r)\psi'\sin\psi\right]dr, \qquad \text{[VIIIa]}$$

and for $\psi_a \le \psi \le \pi$

$$\Gamma_\theta(r,\theta) = -\left\{\frac{\Gamma'(r)}{1+a}\left[2a - \frac{1}{2(1-a)}\left(\cos\psi - \cos\psi_a + \frac{1}{2}\sin^2\psi_a - \frac{1}{2}\sin^2\psi\right)\right]\right.$$

$$\left. + \frac{\Gamma(r)}{2\,(1-a^2)}\,\psi'\sin\psi\,(1+\cos\psi)\right\}dr \qquad \text{[VIIIb]}$$

These two equations are used in Equations [Vc] and [Vd] for evaluation of the induced velocities due to the free system.

RESULTS OF SAMPLE CALCULATIONS

A number of representative sample cases have been computed using the new computer program XPLA. The results of these cases are reported to demonstrate the effect of chordwise loading on blade geometry.

LOAD DISTRIBUTION CORRESPONDING TO VARIOUS NACA MEAN LINES

The first case is for a propeller having a rectangular expanded outline with an aspect ratio of 10. It has zero hydrodynamic pitch and a uniform bound circulation distribution along the radius. Physcially, this fictitious propeller resembles a two-dimensional wing, although the motion involved here is rotational rather than linear translational. The purpose of this calculation is to determine the mean line shapes induced by the uniform radial bound circulation but with various chordwise load distributions corresponding to NACA a = 1.0, 0.8, 0.6, 0.4, and 0.2. A comparison is made with those of the NACA two-dimensional airfoils. The calculated camber distributions at r/R = 0.7 for the various loadings are shown in Figure 4. For comparison, the corresponding two-dimensional distributions as given in Reference 3 are also plotted.

The second set of calculations was made for a five-bladed propeller with symmetrical blades. The blade outline, pitch distribution, and radial bound circulation distribution are the same as those of Propeller 3916A of Reference 2 except that the chordwise loading has been arbitrarily changed from a = 1.0 to a = 0.8, a = 0.6, a = 0.4, and a = 0.2. The propellers for these cases are designated as 3916D, 3916E, 3916F, and 3916G, respectively. The results are shown in Tables 1 through 4. For

comparison, the chordwise distributions of the camber for these propellers at $r/R = 0.7$ are plotted in Figure 5. Similarly, another set of calculations was made for a propeller with skewed blades, which is the same as Propeller 3917A of Reference 2 except for the chordwise loading. The propeller designations for these cases are 3917D, 3917E, 3917F, and 3917G. The calculated camber ratio distributions are shown in Table 5. Figures 6, 7, and 8 show the relative camber distribution of the various cases at various radii for the various lift coefficients shown in terms of the maximum camber of $a = 1.0$. The curves are plotted with the nose-tail line as reference. The ideal angle of attack shown is the one between the helical chord line and the nose-tail reference line. Also shown on these figures are the two-dimensional results. The ideal angle of attack for the symmetrical and skewed propeller blades at various radii for various a values is shown in Figure 9 and is compared with the two-dimensional data corrected to the same lift coefficients in Table 6.

From these comparisons, note that the calculated camber lines at the middle portion of the fictitious narrow rectangular blades are fairly close to the two-dimensional data. For blades of usual propeller shape, however, taking into account the blade shape and the free circulation, the calculated camber lines are somewhat different from those of the two-dimensional cases; these differences are even greater at regions nearing the hub and tip. Figures 6, 7, 8, and 9, and Tables 1 through 5 show that the effect of skew is considerable.

ANGLE OF ATTACK

Calculations have also been made for the abovementioned fictitious narrow rectangular blade of aspect ratio 10 with chordwise load distribution similar to that due to an angle of attack. The calculated results are given in Figure 10. Again, the curves show fairly good agreement with the two-dimensional flat plate. However, the same cannot be said for a blade of usual propeller shape, as is evident from the set of curves shown on the figure representing Propeller 3916J. This propeller is the same as Propeller 3916A in all respects except that the chordwise loading has been arbitrarily changed from uniform to that corresponding to an angle of attack. The calculated results are shown in Table 7. The difference

between this three-dimensional case and the two-dimensional flat plate case is appreciable and represents the three-dimensionality effect of this particular propeller blade.

SINUSOIDAL DISTRIBUTION

Another sample calculation is for Propeller 3916K which is similar to Propeller 3916A except its chordwise loading is sinusoidal, the first term of the sine series. The results of this calculation are shown in Table 8. Figure 11 compares the induced velocities and the camber distributions of this propeller and Propeller 3916A, which has a uniform chordwise loading.

SUPERCAVITATING PROPELLERS

An inspection of the assumed form of the chordwise circulation function of Equation [I] indicates that the loading over the blade can be arbitrarily assigned by adjusting the number of terms and the values of the various coefficients. This flexibility makes it possible to use the computer program in the design calculation of supercavitating propellers. In the two-dimensional analysis, there are a few well-known load distributions which give low drag supercavitating hydrofoils at zero cavitation number. These are the so-called Tulin-Burkhard 2-term, and the Johnson 3- and 5-term foils where theoretical characteristics have been established.[4] Calculations for propellers having chordwise loading similar to these foils were made using the new computer program. The outline of the blade has been assumed to be rectangular with an aspect ratio of 10 and zero hydrodynamic pitch and a constant bound circulation distribution along the radius to simulate as closely as possible the two-dimensional case. The calculated camber ratios are shown in Tables 9, 10, and 11. The comparative values of the "camber ratio to design life coefficient ratios" at $r/R = 0.3$, 0.6, and 0.9, are plotted in Figure 12. For comparison, the two-dimensional data of Reference 4 are also shown in this figure. The agreement between results of the approximate two-dimensional rectangular blade and those of the true two-dimensional is considered quite good, even though there is discrepancy in the regions nearing the hub and tip, $r/R = 0.3$ and $r/R = 0.9$, which could well be expected.

DISCUSSION

The preceding sample calculations were presented to provide a clearer picture of the effect of chordwise loading on the mean line distribution.

The following discussion concerns the results of these limited sample calculations:

In general, the effect of chordwise load distribution on blade geometry is not negligible.

For chordwise loading corresponding to NACA $a < 1.0$ mean lines, the calculated camber distribution and angle of attack are different from those based on the two-dimensional cases, even though the relative effect on the mean line distributions in the middle portion of the blade are not too much different from those of two-dimensional cases.

Skew of the blade materially affects the mean line distribution as well as the angle of attack.

The program as developed may be used for calculations of propellers with various chordwise load distributions and may also be used for the design of supercavitating foils not taking into account the cavity thickness effect.

CONCLUDING REMARKS

A method for correcting the propeller blade geometry for the three-dimensionality of the flow has been given for the case of arbitrary chordwise load distribution. This report and TMB Report 1802[2] complete the discussions on the numerical computational procedure for the hydrodynamic aspect of propeller design based on lifting-surface theory using Pien's scheme.

Both Reference 2 and this present report have shown that three-dimensionality has considerable effect on blade geometry. Many contributing factors, such as number of blades, blade outline, pitch distribution, radial load distribution, and chordwise load distribution, come into play. The contributions of each of these parameters may vary depending on the nature of the problem or on the combinations of these parameters. It appears that, when practicable, each problem should be treated individually.

It is hoped that the computer program as developed can serve as a useful tool to provide propeller designers with a method for obtaining the blade geometry for certain prescribed chordwise load distributions. This program may also be used in the design calculations of supercavitating blades. Experimental verification of this design method has been contemplated and test results of propeller models designed using this method will be reported when available.

Since computers may not always be accessible to propeller designers, it may be advisable to devise some correction factors, taking into account three-dimensionality using two-dimensional data as a basis for a limited number of cases. This work will be deferred until a satisfactory program is developed for the inverse problem of predicting performance for a given propeller in steady flow. At that time the effect on pressure distribution due to variations in blade geometry can be calculated. If pressure distribution is not too sensitive to the changes of camber distributions, then the use of such correction factors would be justified, otherwise their use would lead to unsatisfactory pressure distributions.

It should be noted that the thickness effect has not been included. As brought out in Reference 2, recent work by Kerwin and Leopold may be incorporated to take account of the thickness effect.

The work on the inverse problems of predicing performance for a given propeller design in steady and unsteady flows is underway; results will be reported soon.

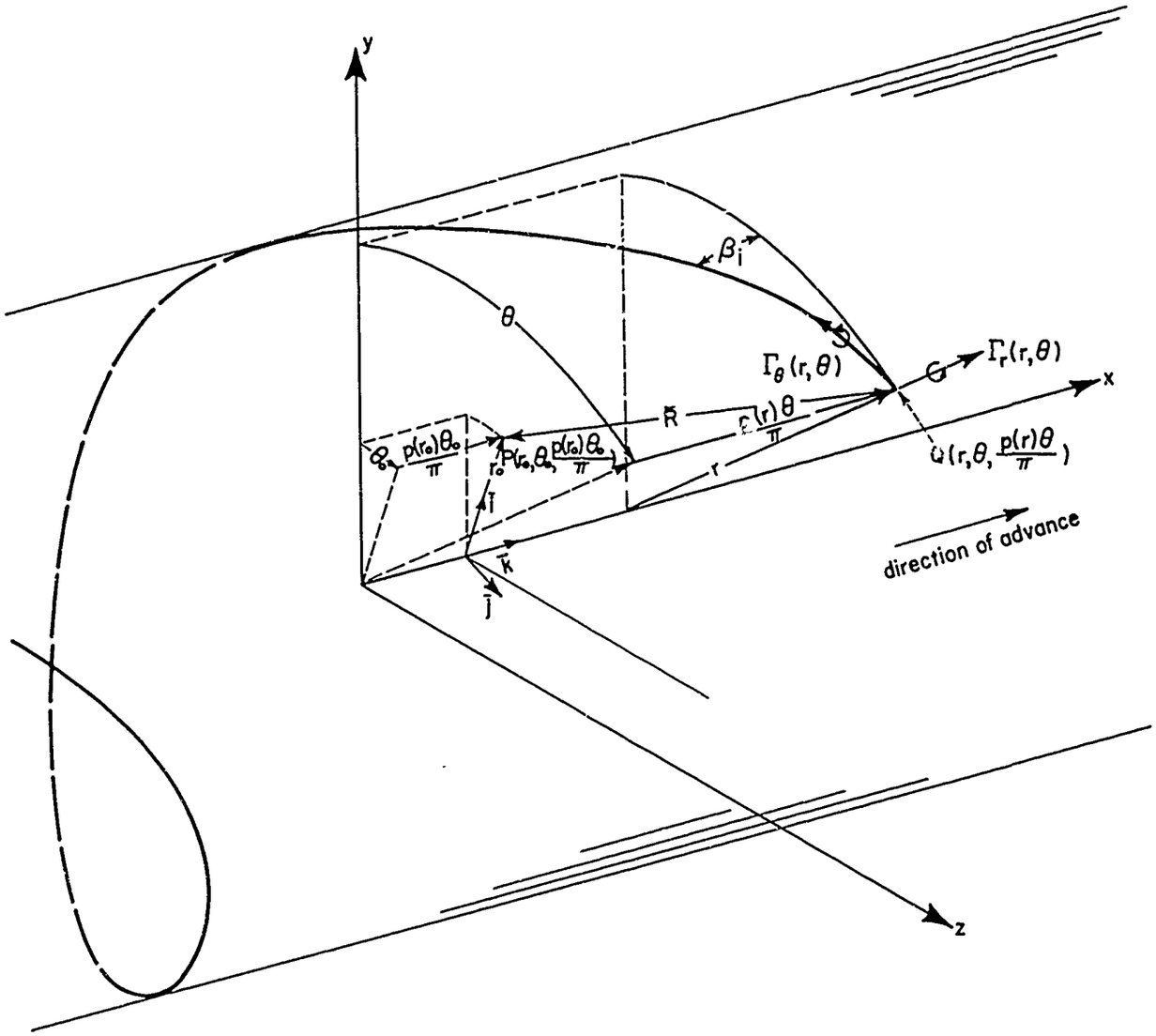

Figure 1 - Coordinate System

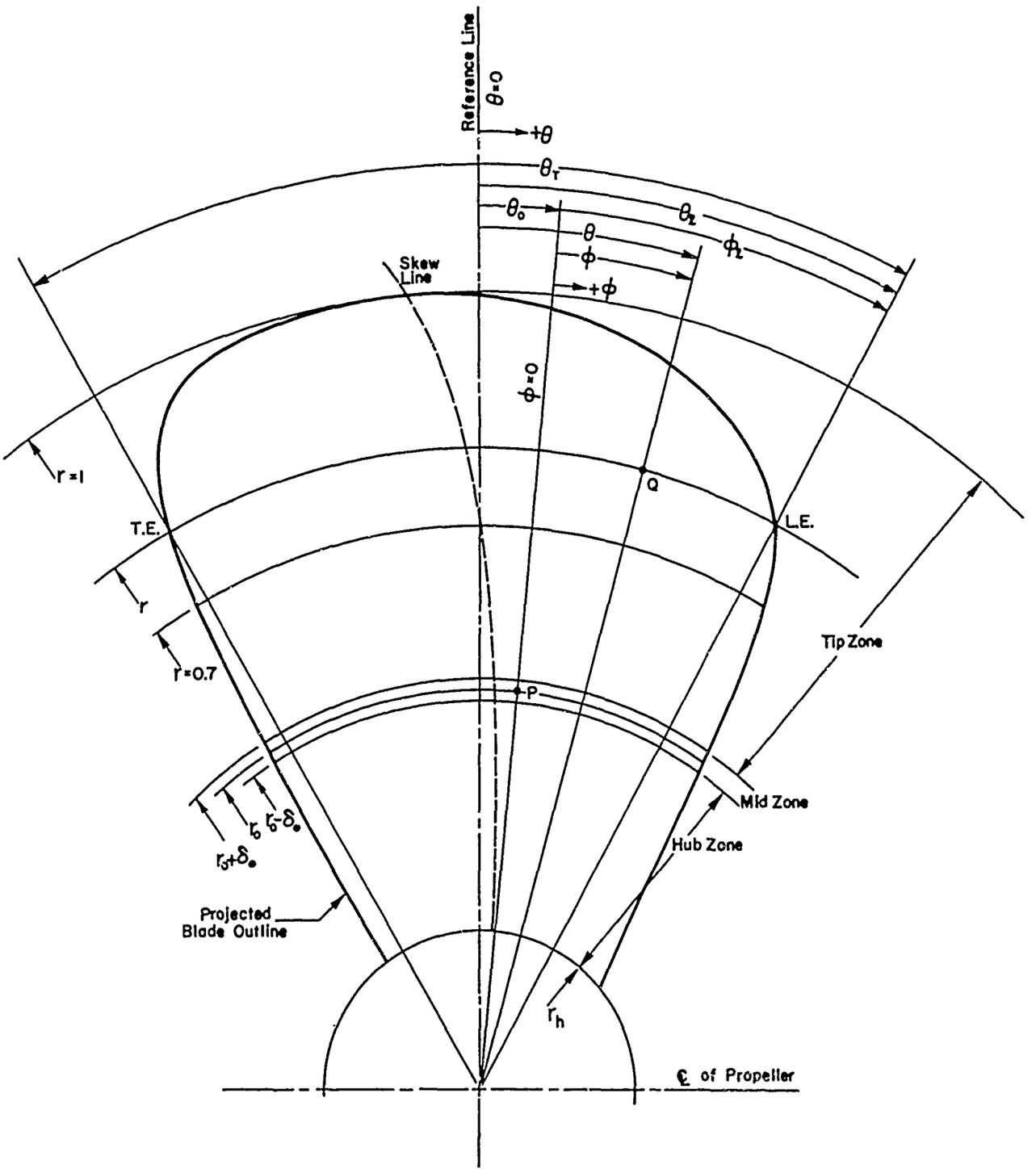

Figure 2 - Coordinate System in Projected Plane and Regions of Integration

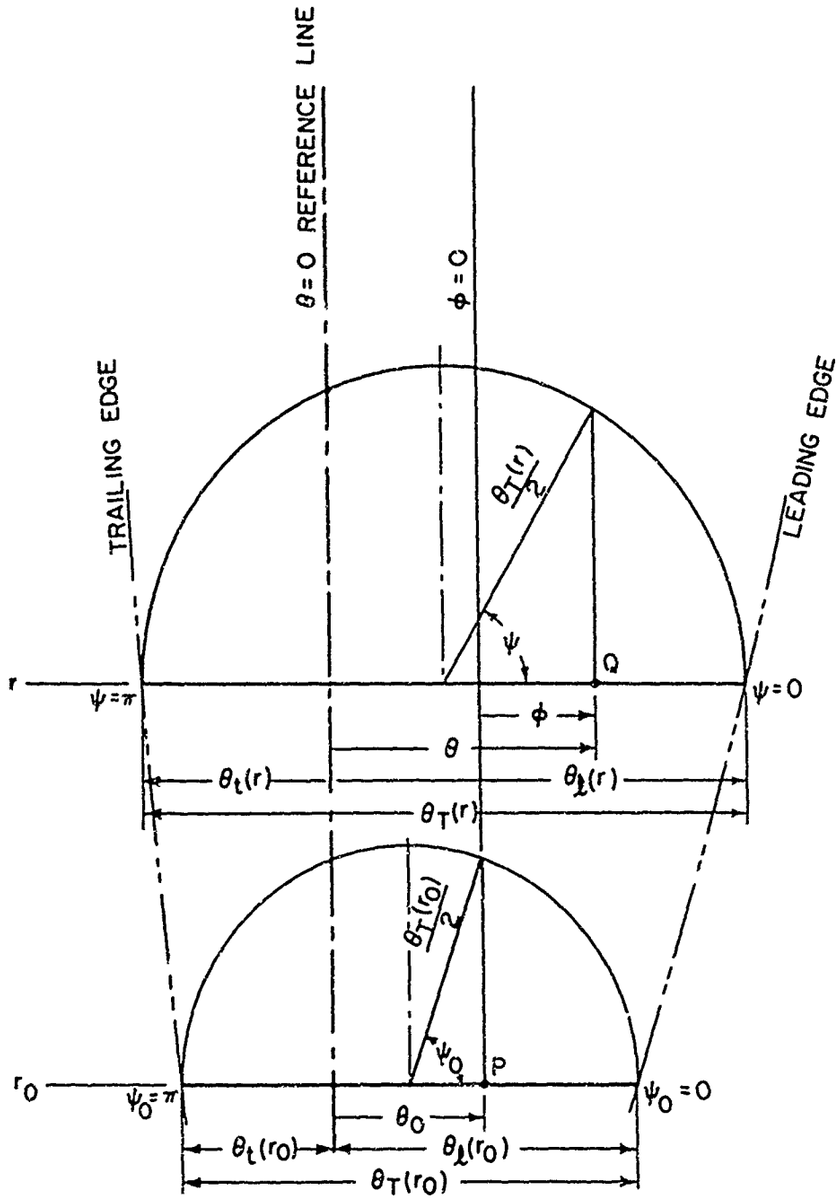

$$\theta = \theta_\ell(r) - \frac{\theta_T(r)}{2}(1-\cos\psi)\ ; \quad \psi = \cos^{-1}\left\{1 - \frac{2}{\theta_T(r)}\left[\theta_\ell(r) - \theta\right]\right\}$$

$$\phi = \theta - \theta_0$$

$$\psi = \cos^{-1}\left\{1 - \frac{2}{\theta_T(r)}\left[\theta_\ell(r) - \theta_\ell(r_0) - \phi + \frac{\theta_T(r_0)}{2}(1-\cos\psi_0)\right]\right\}$$

Figure 3 - Chordwise Coordinate Systems

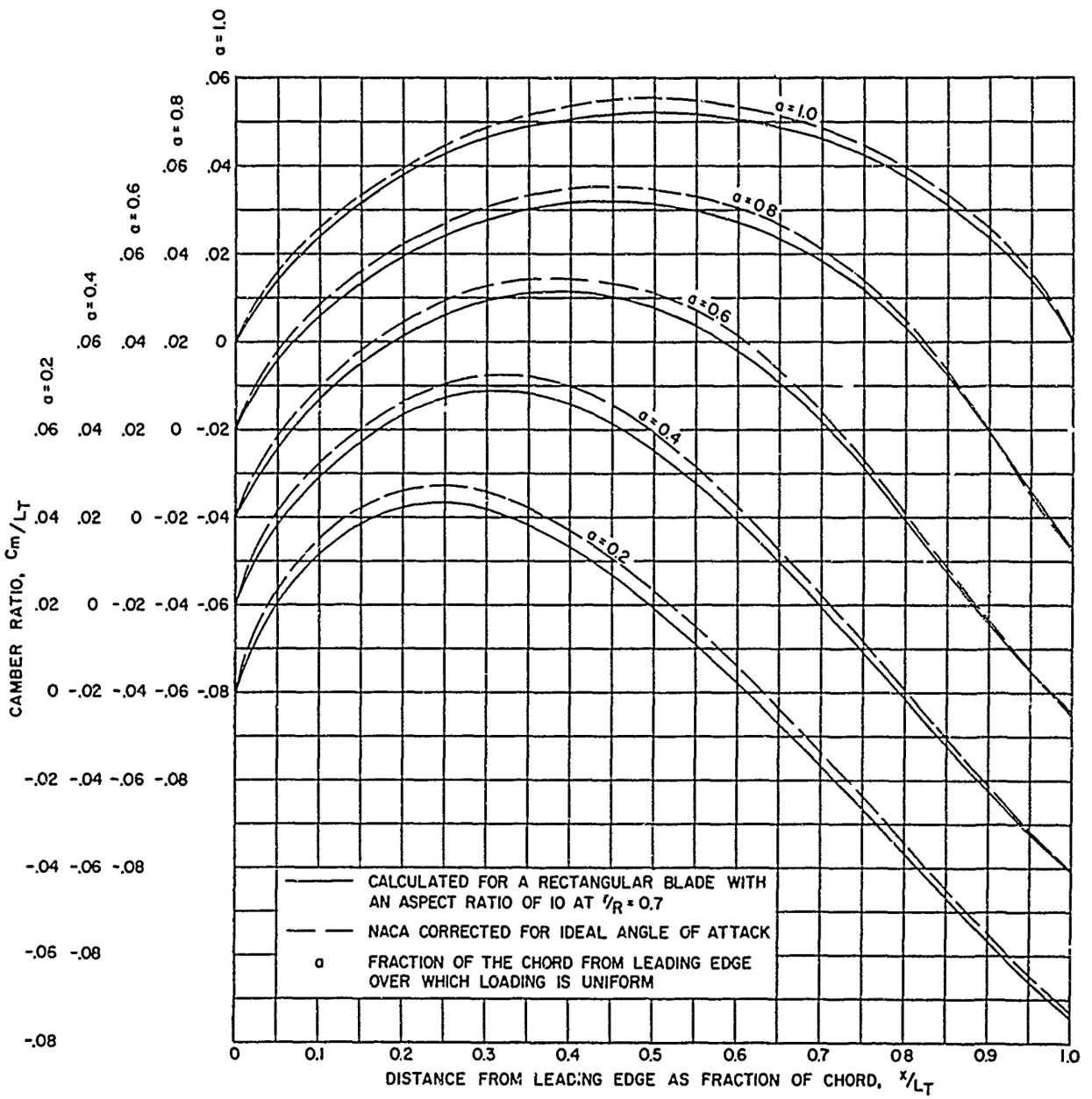

Figure 4 - Camber Lines for a Rectangular Propeller Blade with Various Chordwise Load Distributions Corresponding to NACA a = 1.0, 0.8, 0.6, 0.4, and 0.2 at $C_{\ell_i} = 1.0$

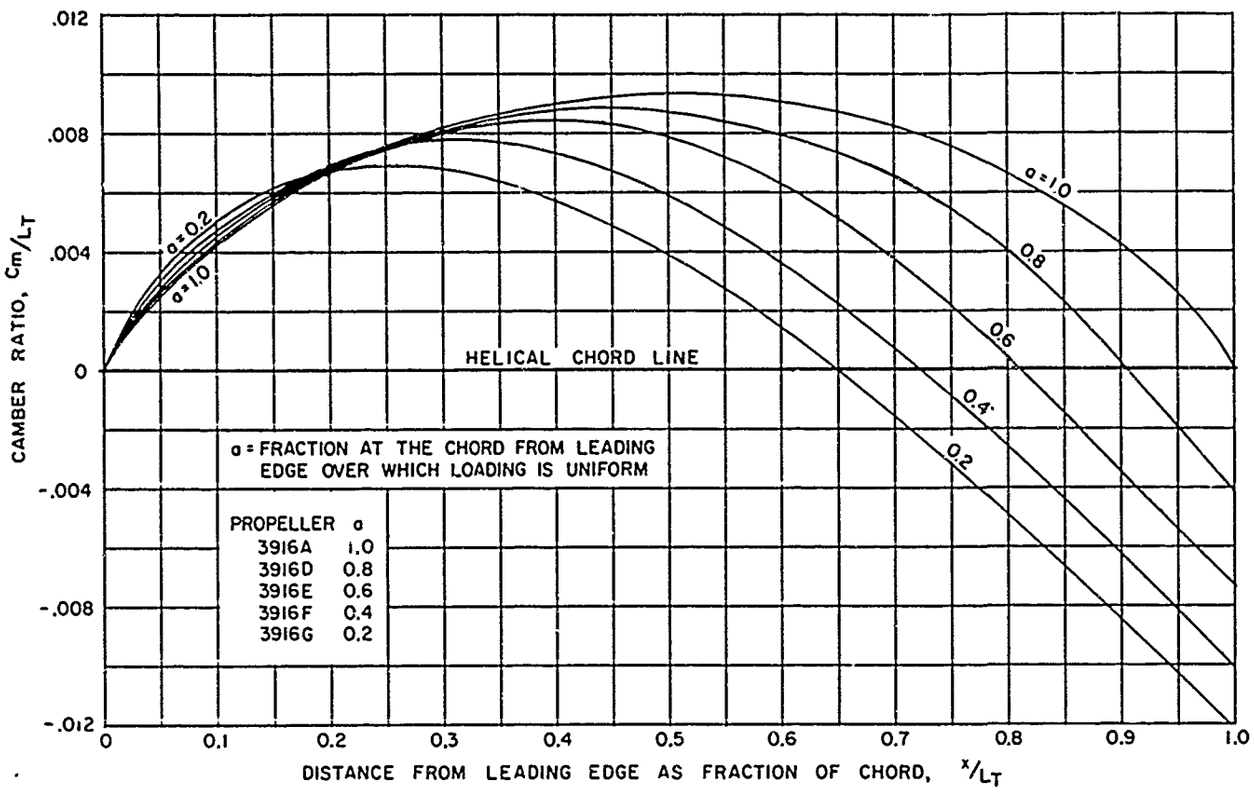

Figure 5 - Camber Distributions at r/R = 0.7 of Propellers 3916A, 3916D, 3916E, 3916F, and 3916G

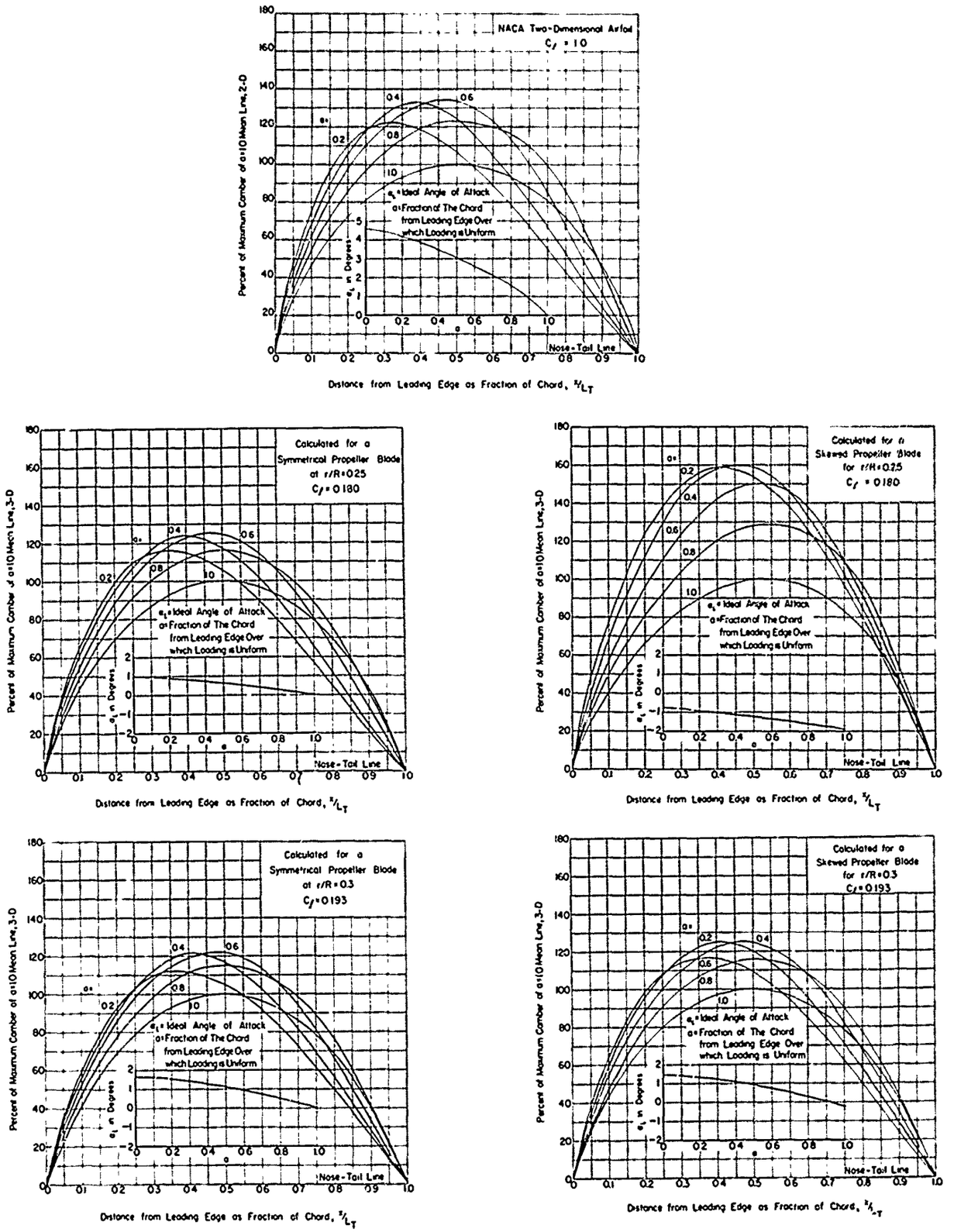

Figure 6 - Relative Camber Distributions of Three-Dimensional Blades (Symmetrical and Skewed) and NACA Two-Dimensional Airfoil with Various Chordwise Load Distributions Corresponding to NACA a = 1.0, 0.8, 0.6, 0.4, and 0.2 at r/R = 0.25 and 0.3

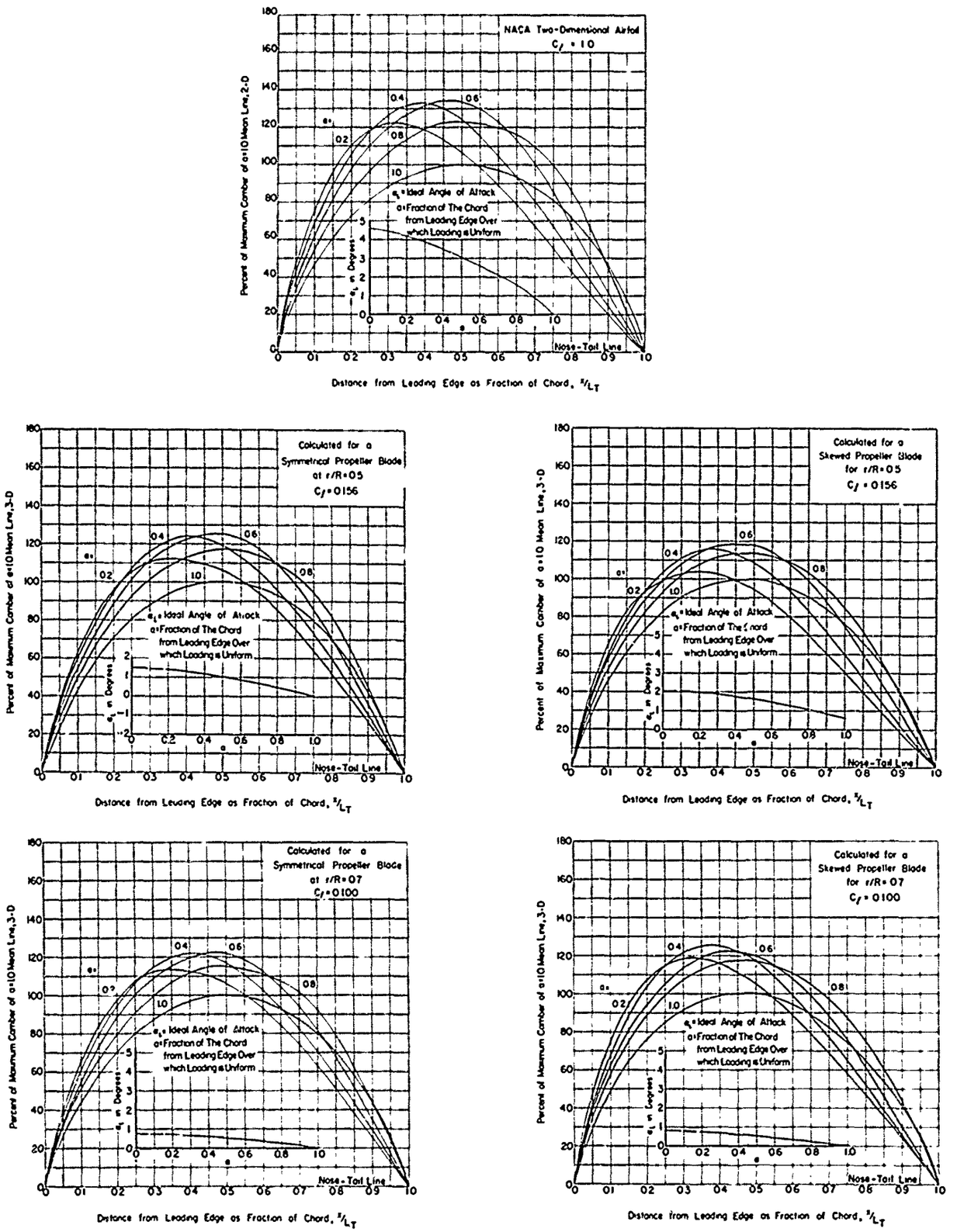

Figure 7 - Relative Camber Distributions of Three-Dimensional Blades (Symmetrical and Skewed) and NACA Two-Dimensional Airfoil with Various Chordwise Load Distributions Corresponding to NACA a = 1.0, 0.8, 0.6, 0.4, and 0.2 at r/R = 0.5 and 0.7

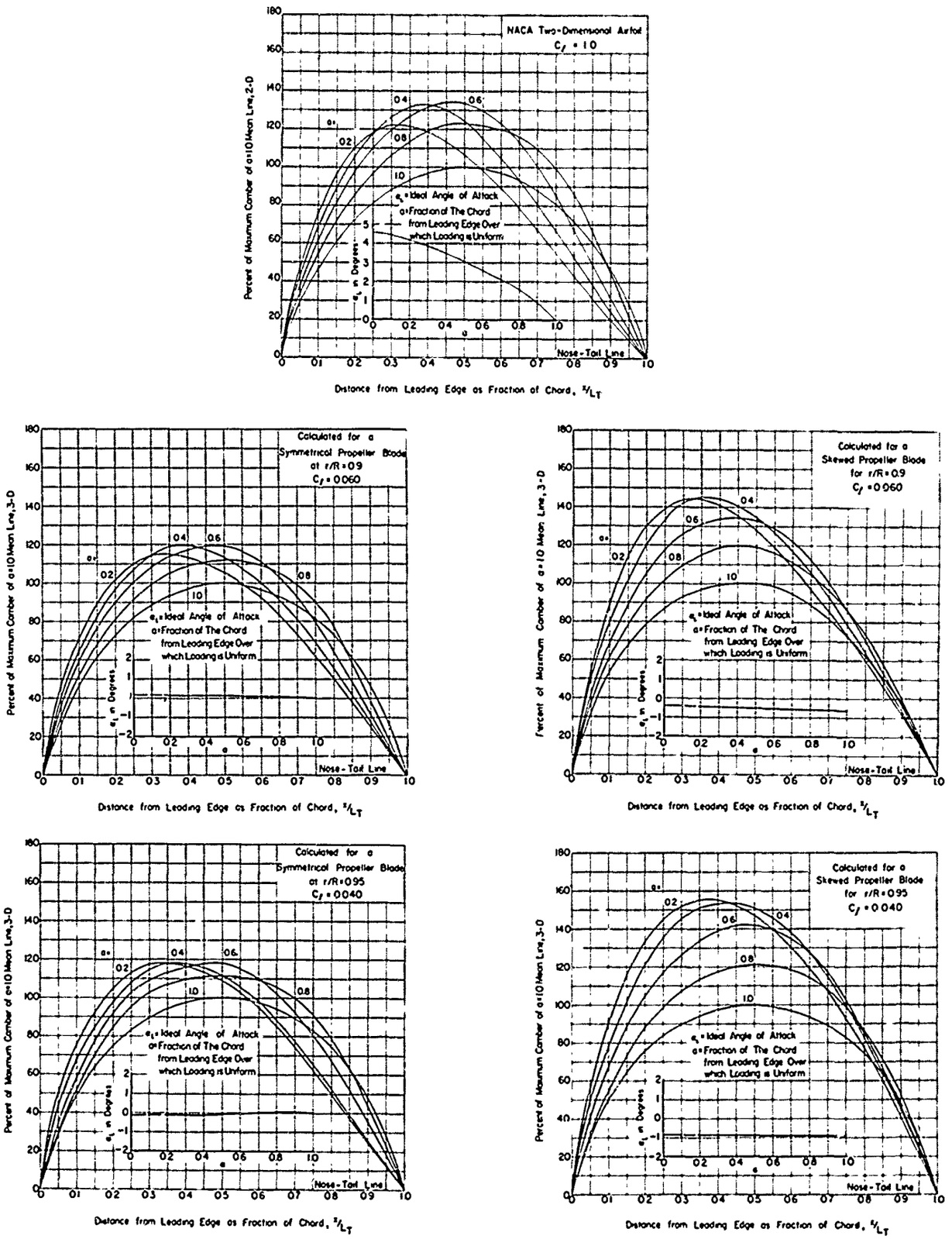

Figure 8 - Relative Camber Distributions of Three-Dimensional Blades (Symmetrical and Skewed) and NACA Two-Dimensional Airfoil with Various Chordwise Load Distributions Corresponding to NACA a = 1.0, 0.8, 0.6, 0.4, and 0.2 at r/R = 0.9 and 0.95

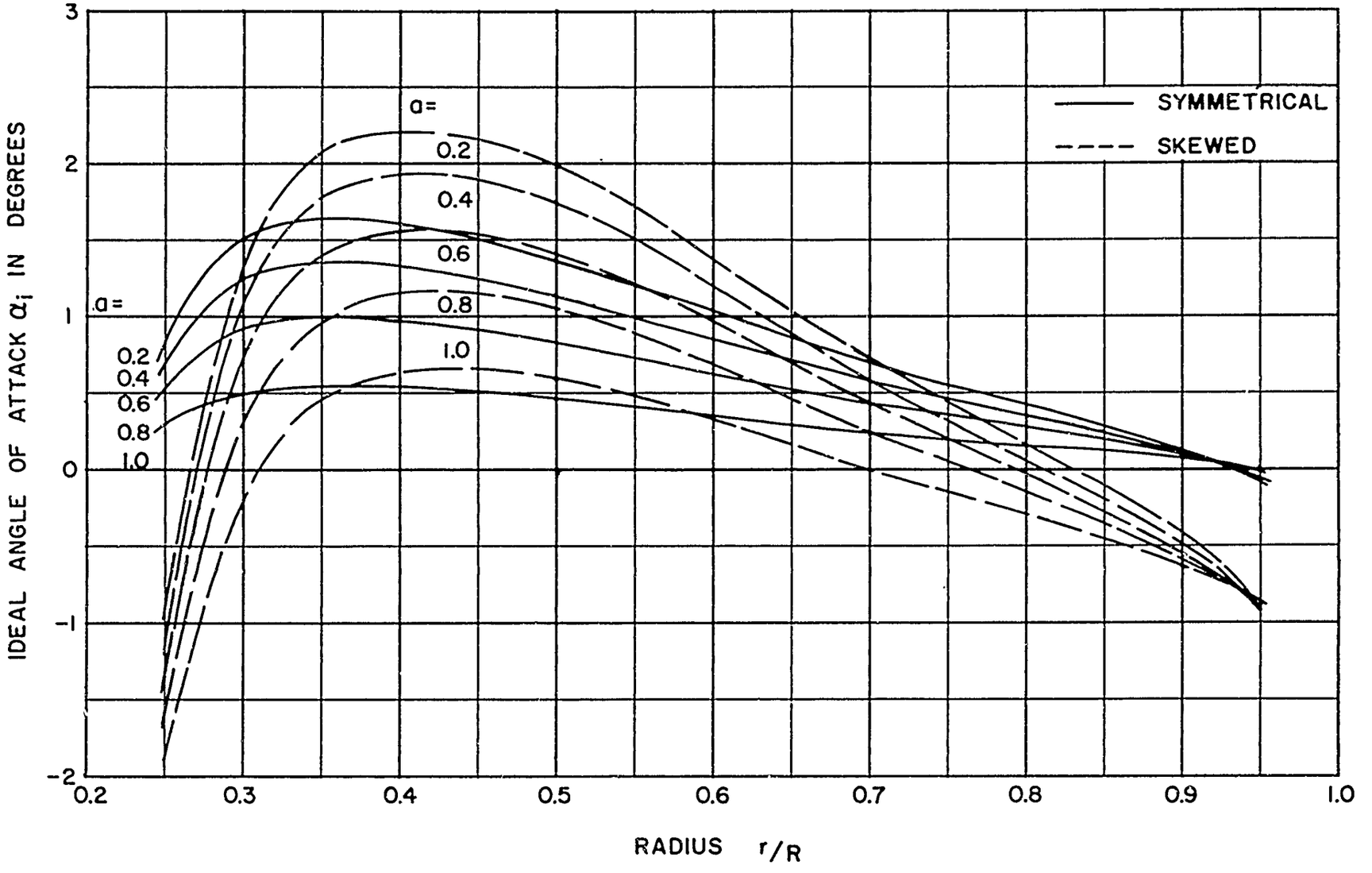

Figure 9 - Comparison of Ideal Angle of Attack, Symmetrical versus Skewed Propeller Blade, for Various Chordwise Load Distributions Corresponding to NACA a = 1.0, 0.8, 0.6, 0.4, and 0.2

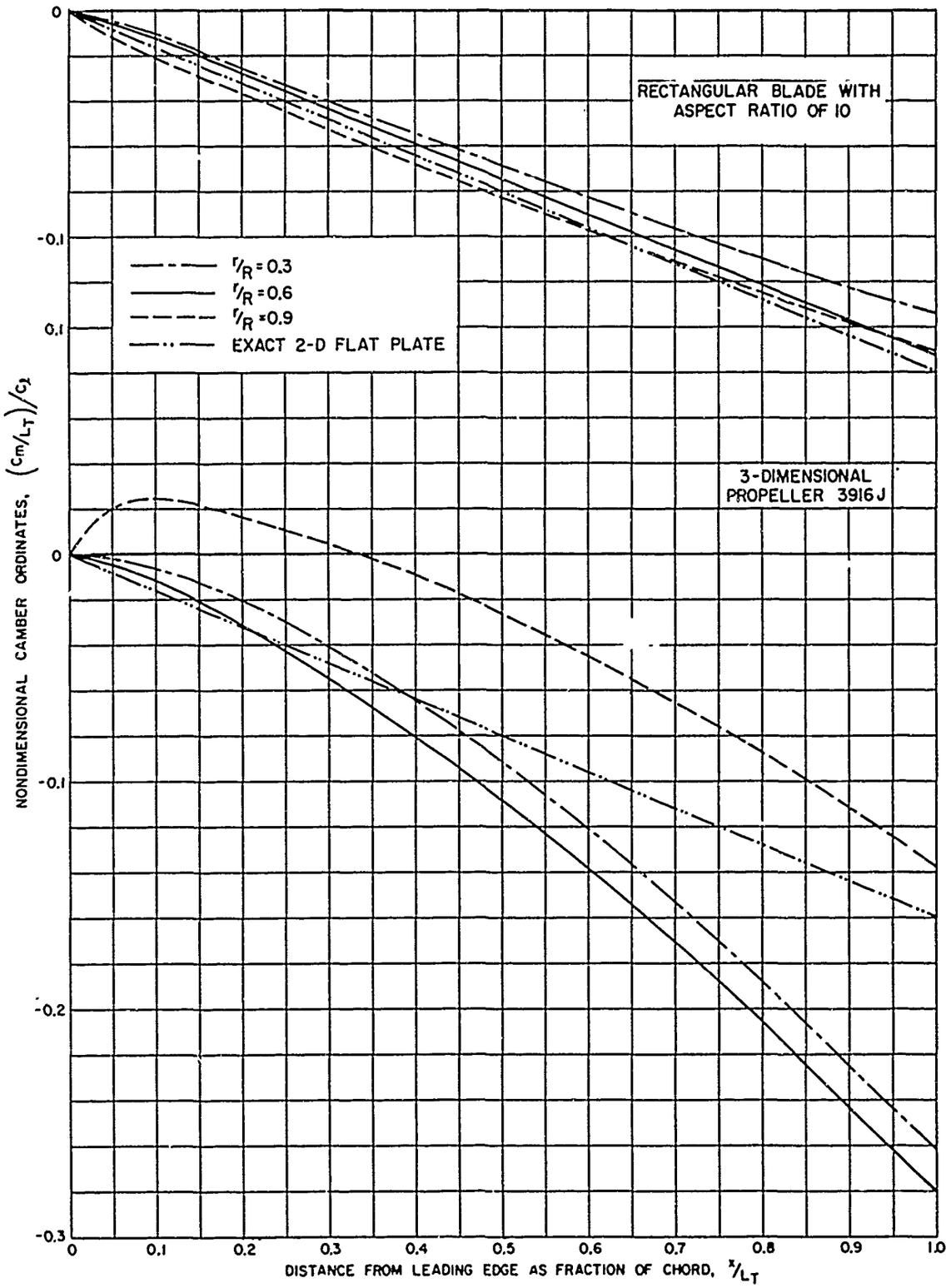

Figure 10 - Comparisons of Camber Distributions due to Angle of Attack of a Rectangular Blade and a Three-Dimensional Propeller (3916J) with a Two-Dimensional Flat Plate

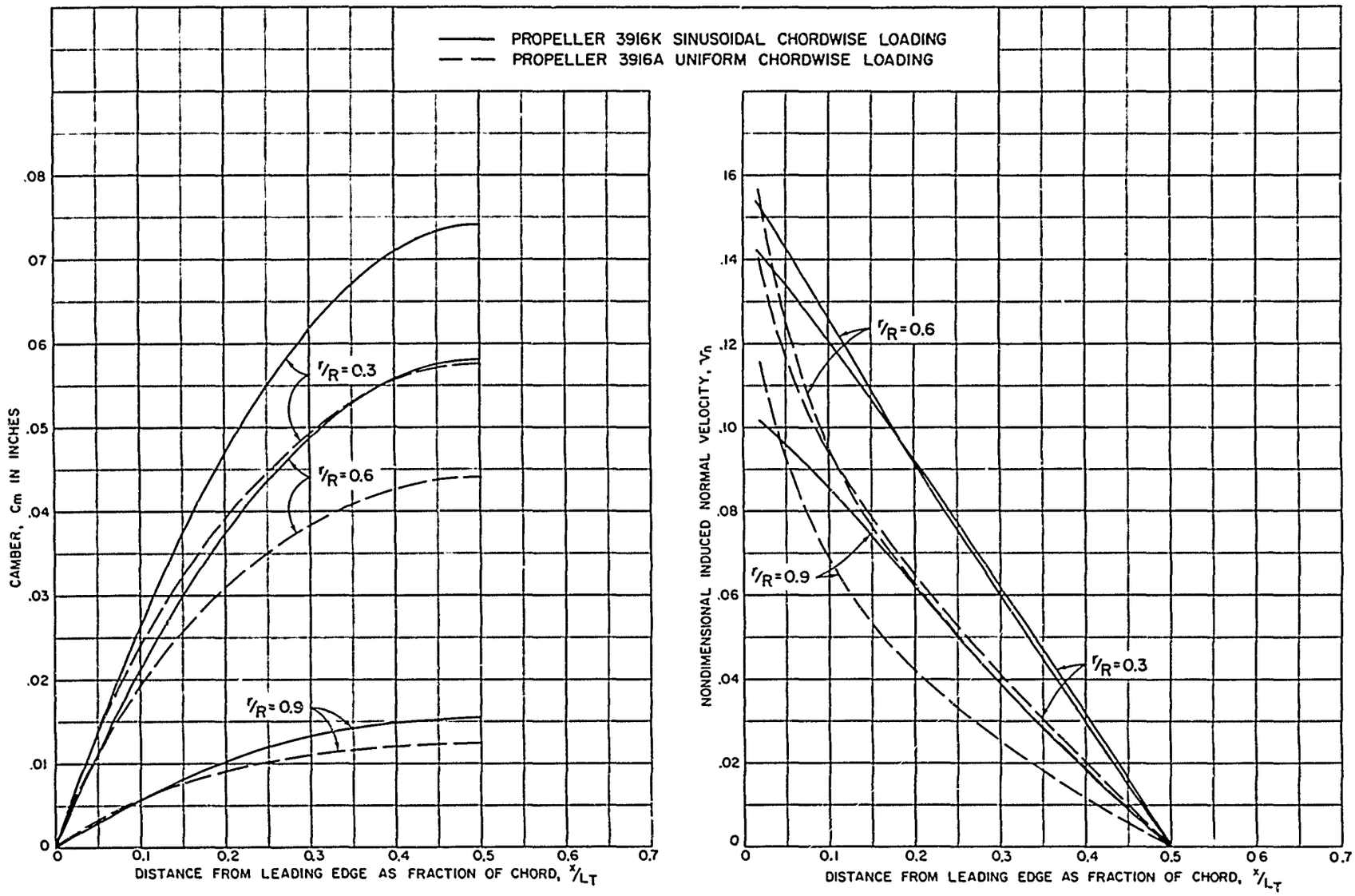

Figure 11 - Comparisons of Induced Normal Velocities and Camber Distributions, Uniform versus Sinusoidal Chordwise Loading

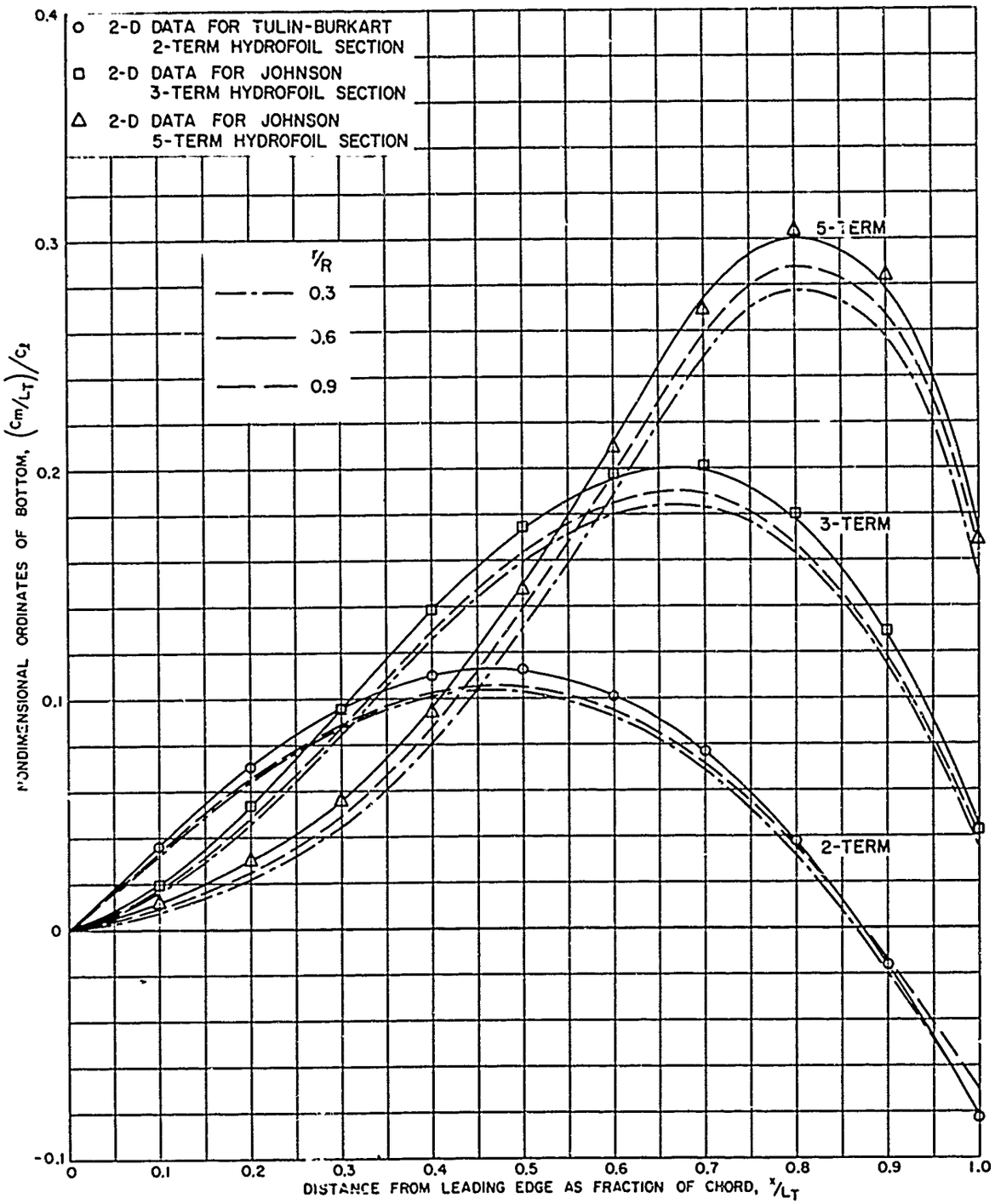

Figure 12 - Comparisons of Rectangular Supercavitating Blades with Various Chordwise Load Distributions at Zero Cavitation Number

TABLE 1

Calculated Induced Velocities and Camber Distributions for Propeller 3916D, a = 0.8

```
CAMBER DISTRIBUTION PROPELLER 3916D  A=0.8        XPLA(1-12-64)

INPUT DATA
    18                                                                                    Card 1  (see Appendix A for explanation)
 0.00500  0.10000  2.00000150.00000                                                       Card 2
0.00500 0.01000 0.01400 0.02400 0.03510 0.05000 0.07000 0.09600 0.12900                   Card 3
0.17000 0.22000 0.28000 0.35200 0.44000 0.55200 0.70900 0.94500 1.00000
      8       9       1       9       0       0       0      80                           Card 5
0.01986 0.10166 0.23724 0.40828 0.59172 0.76276 0.89834 0.98014                           Card 6
0.01000 0.10000 0.20000 0.35000 0.50000 0.65000 0.80000 0.90000 0.99000                   Card 7
0.20000 0.30000 0.40000 0.50000 0.60000 0.70000 0.80000 0.90000 1.00000                   Card 8      r
0.15400 0.18600 0.21500 0.23100 0.23200 0.21750 0.18500 0.13400 0.02000                               L_ℓ(r)/D
0.30800 0.37200 0.43000 0.46200 0.46400 0.43500 0.37000 0.26800 0.04000                               L_t(r)/D
1.86210 1.22835 0.90766 0.70429 0.56622 0.46392 0.38698 0.32722 0.27960                               tan β_ℓ(r)
0.      0.01695 0.02214 0.02371 0.02230 0.01883 0.01414 0.00856 0.                                    Γ(r)
0.25000 0.30000 0.40000 0.50000 0.60000 0.70000 0.80000 0.90000 0.95000                               r_o
1.00000 1.00000 1.00000 1.00000 1.00000 1.00000 1.00000 1.00000 1.00000                               V_x(r_o)
0.14500 0.16902 0.20861 0.22173 0.20765 0.17661 0.13584 0.08937 0.06500                               u_a(r_o)
0.16010 0.16676 0.16039 0.13704 0.10517 0.07483 0.04889 0.02767 0.01770                               u_t(r_o)
1.00000 1.00000 1.00000 1.00000 1.00000 1.00000 1.00000 1.00000 1.00000                   Card 8A     C_o(r)
0.     -0.     -0.     -0.     -0.     -0.     -0.     -0.     -0.                                   A_o(r)
0.     -0.     -0.     -0.     -0.     -0.     -0.     -0.     -0.                                   C_2(r)
0.     -0.     -0.     -0.     -0.     -0.     -0.     -0.     -0.                                   A_1(r)
0.     -0.     -0.      0.     -0.     -0.     -0.     -0.     -0.                                   A_2(r)
0.     -0.     -0.     -0.     -0.     -0.     -0.     -0.     -0.                                   A_3(r)
0.     -0.     -0.     -0.     -0.     -0.     -0.     -0.     -0.                                   A_4(r)
0.     -0.     -0.     -0.     -0.     -0.     -0.     -0.     -0.                                   A_5(r)
      1 1.00000 0.82600 8.00000 1.00000 1.00000 0.                                            Card 9
```

OUTPUT DATA

AXIAL INDUCED VELOCITY COMPONENT

RX/RO	0.2500	0.3000	0.4000	0.5000	0.6000	0.7000	0.8000	0.9000	0.9500
X/LT									
0.0199	0.0471	0.0695	0.1124	0.1328	0.1402	0.1381	0.1401	0.1202	0.1040
0.1017	0.0277	0.0558	0.0659	0.0781	0.0813	0.0777	0.0740	0.0681	0.0629
0.2372	0.0145	0.0301	0.0334	0.0393	0.0410	0.0387	0.0373	0.0339	0.0292
0.4083	0.0026	0.0051	0.0041	0.0048	0.0056	0.0060	0.0069	0.0071	0.0077
0.5917	-0.0094	-0.0206	-0.0253	-0.0297	-0.0297	-0.0262	-0.0224	-0.0167	-0.0101
0.7628	-0.0242	-0.0501	-0.0613	-0.0719	-0.0728	-0.0666	-0.0597	-0.0499	-0.0388
0.8983	-0.0396	-0.0798	-0.1020	-0.1200	-0.1220	-0.1135	-0.1024	-0.0871	-0.0706
0.9801	-0.0368	-0.0790	-0.1034	-0.1224	-0.1234	-0.1128	-0.0993	-0.0799	-0.0607

TANGENTIAL INDUCED VELOCITY COMPONENT

RX/RO	0.2500	0.3000	0.4000	0.5000	0.6000	0.7000	0.8000	0.9000	0.9500
X/LT									
0.0199	-0.0808	-0.1169	-0.1043	-0.0930	-0.0777	-0.0623	-0.0528	-0.0387	-0.0309
0.1017	-0.0506	-0.0746	-0.0626	-0.0554	-0.0454	-0.0352	-0.0279	-0.0219	-0.0187
0.2372	-0.0277	-0.0411	-0.0326	-0.0285	-0.0233	-0.0178	-0.0142	-0.0111	-0.0089
0.4083	-0.0055	-0.0073	-0.0045	-0.0039	-0.0034	-0.0030	-0.0028	-0.0026	-0.0026
0.5917	0.0175	0.0278	0.0241	0.0212	0.0166	0.0118	0.0082	0.0051	0.0026
0.7628	0.0442	0.0671	0.0581	0.0511	0.0406	0.0300	0.0221	0.0156	0.0110
0.8983	0.0693	0.1045	0.0946	0.0838	0.0671	0.0505	0.0378	0.0274	0.0203
0.9801	0.0444	0.1028	0.0949	0.0845	0.0670	0.0495	0.0361	0.0247	0.0171

INDUCED DOWNWASH DUE TO FIRST BLADE ONLY

RX/RO	0.2500	0.3000	0.4000	0.5000	0.6000	0.7000	0.8000	0.9000	0.9500
X/LT									
0.0199	0.0933	0.1472	0.1533	0.1622	0.1603	0.1515	0.1497	0.1263	0.1085
0.1017	0.0574	0.0931	0.0909	0.0957	0.0932	0.0853	0.0791	0.0716	0.0656
0.2372	0.0311	0.0508	0.0466	0.0486	0.0472	0.0426	0.0399	0.0357	0.0305
0.4083	0.0060	0.0089	0.0061	0.0061	0.0065	0.0067	0.0074	0.0076	0.0081
0.5917	-0.0198	-0.0346	-0.0350	-0.0365	-0.0340	-0.0288	-0.0238	-0.0174	-0.0104
0.7628	-0.0502	-0.0837	-0.0844	-0.0882	-0.0834	-0.0730	-0.0637	-0.0523	-0.0403
0.8983	-0.0796	-0.1314	-0.1392	-0.1464	-0.1393	-0.1242	-0.1091	-0.0913	-0.0735
0.9801	-0.0742	-0.1296	-0.1403	-0.1487	-0.1404	-0.1232	-0.1056	-0.0836	-0.0630

RX/RO	0.2500	0.3000	0.4000	0.5000	0.6000	0.7000	0.8000	0.9000	0.9500
P/D	1.1560	1.1577	1.1406	1.1063	1.0673	1.0202	0.9726	0.9252	0.8976
L.E.	1.3607	1.4880	1.7200	1.8480	1.8560	1.7400	1.4800	1.0720	0.7472
CHORD	2.7213	2.9760	3.4400	3.6960	3.7120	3.4800	2.9600	2.1440	1.4945

CAMBER DISTRIBUTION

X/LT									
0.0100	0.0020	0.0032	0.0032	0.0031	0.0027	0.0021	0.0016	0.0009	0.0005
0.1000	0.0154	0.0245	0.0242	0.0253	0.0198	0.0152	0.0111	0.0062	0.0036
0.2000	0.0244	0.0392	0.0377	0.0362	0.0307	0.0233	0.0168	0.0096	0.0056
0.3500	0.0319	0.0515	0.0484	0.0464	0.0393	0.0297	0.0213	0.0122	0.0071
0.5000	0.0330	0.0529	0.0491	0.0469	0.0399	0.0303	0.0220	0.0127	0.0075
0.6500	0.0278	0.0439	0.0402	0.0384	0.0330	0.0256	0.0190	0.0113	0.0070
0.8000	0.0153	0.0229	0.0198	0.0190	0.0172	0.0143	0.0116	0.0074	0.0051
0.9000	0.0016	0.0002	-0.0030	-0.0027	-0.0007	0.0012	0.0029	0.0027	0.0026
0.9900	-0.0124	-0.0234	-0.0275	-0.0263	-0.0201	-0.0129	-0.0063	-0.0022	0.0000

CAMBER RATIO

X/LT									
0.0100	0.0007	0.0011	0.0009	0.0008	0.0007	0.0006	0.0005	0.0004	0.0003
0.1000	0.0057	0.0082	0.0070	0.0063	0.0053	0.0044	0.0038	0.0029	0.0024
0.2000	0.0090	0.0132	0.0110	0.0098	0.0083	0.0067	0.0057	0.0045	0.0038
0.3500	0.0117	0.0173	0.0141	0.0125	0.0106	0.0085	0.0072	0.0057	0.0048
0.5000	0.0121	0.0178	0.0143	0.0127	0.0107	0.0087	0.0074	0.0059	0.0050
0.6500	0.0102	0.0147	0.0117	0.0104	0.0089	0.0074	0.0064	0.0053	0.0047
0.8000	0.0056	0.0077	0.0057	0.0052	0.0046	0.0041	0.0039	0.0035	0.0034
0.9000	0.0006	0.0001	-0.0009	-0.0007	-0.0002	0.0003	0.0010	0.0013	0.0017
0.9900	-0.0045	-0.0079	-0.0080	-0.0071	-0.0054	-0.0037	-0.0021	-0.0010	0.0000

NOTES: 1. Calculation based on one blade only

2. Calculated camber in inches

TABLE 2
Calculated Induced Velocities and Camber Distributions for Propeller 3916E, a = 0.6

```
CAMBER DISTRIBUTION PROPELLER 3916D  A=0.6        XPLA(1-12-64)

INPUT DATA
     18                                                                    Card 1  (see Appendix A for explanation)
 0.00500  0.10000  2.00000150.00000                                        Card 2
0.00500 0.01000 0.01600 0.02400 0.03510 0.05000 0.07000 0.09600 0.12900    Card 3
0.17000 0.22000 0.28000 0.35200 0.44000 0.55200 0.70900 0.94500 1.00000
      8       9       0       9       0       0       0      60            Card 5
0.01986 0.10186 0.23724 0.40028 0.59172 0.76276 0.89834 0.98014            Card 6
0.01000 0.10000 0.20000 0.35000 0.50000 0.65000 0.80000 0.90000 0.99000    Card 7
0.20000 0.30000 0.40000 0.50000 0.60000 0.70000 0.80000 0.90000 1.00000    Card 8      r
0.15400 0.18600 0.21500 0.23100 0.23200 0.21750 0.18500 0.13400 0.02000                Lz(r)/D
0.30800 0.37200 0.43000 0.46200 0.46400 0.43500 0.37000 0.26800 0.04000                Lt(r)/D
1.86210 1.22835 0.90766 0.70429 0.56622 0.46392 0.38698 0.32722 0.27960                tan βi(r)
0.      0.01695 0.02214 0.02371 0.02230 0.01883 0.01414 0.00856 0.                     Γ(r)
0.25000 0.30000 0.40000 0.50000 0.60000 0.70000 0.80000 0.90000 0.95000                r0
1.00000 1.00000 1.00000 1.00000 1.00000 1.00000 1.00000 1.00000 1.00000                Vx(r0)
0.14500 0.16902 0.20861 0.22173 0.20765 0.17671 0.13584 0.08937 0.06500                ua(r0)
0.16010 0.16678 0.16039 0.13704 0.10517 0.07403 0.04889 0.02767 0.01770                ur(r0)
1.00000 1.00000 1.00000 1.00000 1.00000 1.00000 1.00000 1.00000 1.00000    Card 8A     Co(r)
0.      -0.     -0.     -0.     -0.     -0.     -0.     -0.     -0.                    Ao(r)
0.      -0.     -0.     -0.     -0.     -0.     -0.     -0.     -0.                    Cz(r)
0.      -0.     -0.     -0.     -0.     -0.     -0.     -0.     -0.                    A1(r)
0.      -0.     -0.     -0.     -0.     -0.     -0.     -0.     -0.                    A2(r)
0.      -0.     -0.     -0.     -0.     -0.     -0.     -0.     -0.                    A3(r)
0.      -0.     -0.     -0.     -0.     -0.     -0.     -0.     -0.                    A4(r)
0.      -0.     -0.     -0.     -0.     -0.     -0.     -0.     -0.                    A5(r)
      1 1.00000 0.82600 8.00000 1.00000 1.00000 0.                                     Card 9

OUTPUT DATA

AXIAL INDUCED VELOCITY COMPONENT

     RX/RO      0.2500     0.3000     0.4000     0.5000     0.6000     0.7000     0.8000     0.9000     0.9500
X/LT
 0.0199         0.0501     0.0932     0.1163     0.1375     0.1463     0.1459     0.1508     0.1317     0.1170
 0.1017         0.0283     0.0551     0.0639     0.0757     0.0799     0.0771     0.0761     0.0726     0.0702
 0.2372         0.0152     0.0259     0.0269     0.0316     0.0340     0.0334     0.0344     0.0337     0.0319
 0.4083        -0.0009    -0.0031    -0.0074    -0.0087    -0.0074    -0.0049    -0.0012     0.0024     0.0068
 0.5917        -0.0182    -0.0373    -0.0480    -0.0559    -0.0554    -0.0492    -0.0373    -0.0305    -0.0181
 0.7628        -0.0325    -0.0663    -0.0848    -0.0992    -0.0993    -0.0898    -0.0782    -0.0627    -0.0450
 0.8983        -0.0344    -0.0741    -0.0964    -0.1137    -0.1137    -0.1027    -0.0886    -0.0707    -0.0509
 0.9801        -0.0316    -0.0722    -0.0952    -0.1128    -0.1122    -0.0998    -0.0838    -0.0627    -0.0413

TANGENTIAL INDUCED VELOCITY COMPONENT

     RX/RO      0.2500     0.3000     0.4000     0.5000     0.6000     0.7000     0.8000     0.9000     0.9500
X/LT
 0.0199        -0.0863    -0.1221    -0.1083    -0.0965    -0.0812    -0.0660    -0.0571    -0.0426    -0.0351
 0.1017        -0.0520    -0.0744    -0.0612    -0.0541    -0.0448    -0.0354    -0.0289    -0.0236    -0.0213
 0.2372        -0.0256    -0.0360    -0.0270    -0.0234    -0.0197    -0.0157    -0.0134    -0.0113    -0.0101
 0.4083         0.0010     0.0035     0.0060     0.0055     0.0036     0.0017    -0.0002    -0.0014    -0.0028
 0.5917         0.0329     0.0501     0.0452     0.0396     0.0307     0.0218     0.0149     0.0091     0.0045
 0.7628         0.0580     0.0880     0.0794     0.0697     0.0548     0.0398     0.0285     0.0192     0.0123
 0.8983         0.0608     0.0968     0.0889     0.0789     0.0619     0.0450     0.0319     0.0215     0.0138
 0.9801         0.0586     0.0934     0.0870     0.0777     0.0606     0.0433     0.0297     0.0187     0.0107

INDUCED DOWNWASH DUE TO FIRST BLADE ONLY

     RX/RO      0.2500     0.3000     0.4000     0.5000     0.6000     0.7000     0.8000     0.9000     0.9500
X/LT
 0.0199         0.0996     0.1535     0.1589     0.1679     0.1673     0.1601     0.1613     0.1385     0.1221
 0.1017         0.0589     0.0925     0.0885     0.0930     0.0916     0.0854     0.0815     0.0764     0.0734
 0.2372         0.0286     0.0443     0.0380     0.0393     0.0393     0.0369     0.0369     0.0355     0.0334
 0.4083        -0.0013    -0.0047    -0.0095    -0.0103    -0.0082    -0.0052    -0.0011     0.0027     0.0073
 0.5917        -0.0374    -0.0624    -0.0659    -0.0685    -0.0633    -0.0538    -0.0439    -0.0318    -0.0186
 0.7628        -0.0662    -0.1101    -0.1162    -0.1212    -0.1134    -0.0982    -0.0832    -0.0655    -0.0466
 0.8983        -0.0696    -0.1218    -0.1311    -0.1384    -0.1295    -0.1121    -0.0941    -0.0739    -0.0527
 0.9801        -0.0638    -0.1181    -0.1290    -0.1370    -0.1275    -0.1087    -0.0888    -0.0654    -0.0426

     RX/RO      0.2500     0.3000     0.4000     0.5000     0.6000     0.7000     0.8000     0.9000     0.9500
     P/D        1.1560     1.1577     1.1406     1.1063     1.0673     1.0202     0.9726     0.9252     0.8976
     L.E.       1.3607     1.4880     1.7200     1.8480     1.8560     1.7400     1.4800     1.0720     0.7472
     CHORD      2.7213     2.9760     3.4400     3.6960     3.7120     3.4800     2.9600     2.1440     1.4943

CAMBER DISTRIBUTION
X/LT
 0.0100         0.0022     0.0033     0.0034     0.0033     0.0028     0.0022     0.0017     0.0009     0.0005
 0.1000         0.0162     0.0252     0.0246     0.0236     0.0203     0.0158     0.0118     0.0068     0.0041
 0.2000         0.0253     0.0394     0.0373     0.0357     0.0306     0.0237     0.0175     0.0103     0.0063
 0.3500         0.0318     0.0492     0.0451     0.0431     0.0371     0.0288     0.0215     0.0128     0.0079
 0.5000         0.0304     0.0463     0.0410     0.0391     0.0341     0.0270     0.0208     0.0128     0.0083
 0.6500         0.0204     0.0296     0.0258     0.0228     0.0211     0.0180     0.0152     0.0102     0.0073
 0.8000         0.0026     0.0001    -0.0062    -0.0057    -0.0019     0.0016     0.0049     0.0050     0.0049
 0.9000        -0.0112    -0.0235    -0.0306    -0.0290    -0.0208    -0.0118    -0.0037     0.0005     0.0027
 0.9900        -0.0228    -0.0444    -0.0527    -0.0503    -0.0380    -0.0240    -0.0113    -0.0032     0.0010

CAMBER RATIO
X/LT
 0.0100         0.0008     0.0011     0.0010     0.0009     0.0008     0.0006     0.0006     0.0004     0.0004
 0.1000         0.0060     0.0085     0.0071     0.0064     0.0055     0.0045     0.0040     0.0032     0.0027
 0.2000         0.0093     0.0132     0.0108     0.0097     0.0082     0.0068     0.0059     0.0048     0.0042
 0.3500         0.0117     0.0165     0.0131     0.0117     0.0100     0.0083     0.0073     0.0060     0.0053
 0.5000         0.0112     0.0156     0.0119     0.0106     0.0092     0.0078     0.0070     0.0060     0.0055
 0.6500         0.0075     0.0099     0.0069     0.0062     0.0057     0.0052     0.0052     0.0048     0.0049
 0.8000         0.0010     0.0000    -0.0018    -0.0015    -0.0005     0.0005     0.0016     0.0023     0.0033
 0.9000        -0.0041    -0.0079    -0.0089    -0.0078    -0.0056    -0.0034    -0.0013     0.0002     0.0018
 0.9900        -0.0084    -0.0150    -0.0153    -0.0136    -0.0102    -0.0069    -0.0038    -0.0015     0.0007
```

NOTES: 1. Calculation based on one blade only

2. Calculated camber in inches

TABLE 3
Calculated Induced Velocities and Camber Distributions for Propeller 3916F, a = 0.4

CAMBER DISTRIBUTION PROPELLER 3916F A=0.4 XPLA(1-12-64)

INPUT DATA

18									Card 1 (see Appendix A for explanation)
0.00500	0.10000	2.00000	150.00000						Card 2
0.00500	0.01000	0.01600	0.02400	0.03510	0.05000	0.07000	0.09600	0.12900	Card 3
0.17000	0.22000	0.28000	0.35200	0.44000	0.55200	0.70900	0.94500	1.00000	
8	9	1	9	0	0	0	40		Card 5
0.01986	0.10166	0.23724	0.40828	0.59172	0.76276	0.89834	0.98014		Card 6
0.01000	0.10000	0.20000	0.35000	0.50000	0.65000	0.80000	0.90000	0.99000	Card 7
0.20000	0.30000	0.40000	0.50000	0.60000	0.70000	0.80000	0.90000	1.00000	Card 8 r
0.15400	0.18600	0.21500	0.23100	0.23200	0.21750	0.18500	0.13400	0.02000	$L_l(r)/D$
0.30800	0.37200	0.43000	0.46200	0.46400	0.43500	0.37000	0.26800	0.04000	$L_t(r)/D$
1.86210	1.22835	0.90766	0.70429	0.56622	0.46392	0.38698	0.32722	0.27960	$\tan\beta_1(r)$
0.	0.01695	0.02214	0.02371	0.02230	0.01883	0.01414	0.00856	0.	$\Gamma(r)$
0.25000	0.30000	0.40000	0.50000	0.60000	0.70000	0.80000	0.90000	0.95000	r_o
1.00000	1.00000	1.00000	1.00000	1.00000	1.00000	1.00000	1.00000	1.00000	$V_x(r_o)$
0.14600	0.16902	0.20861	0.22173	0.20765	0.17661	0.13584	0.08937	0.06500	$u_a(r_o)$
0.16010	0.14678	0.16039	0.13704	0.10517	0.07483	0.04889	0.02767	0.01770	$u_t(r_o)$
1.00000	1.00000	1.00000	1.00000	1.00000	1.00000	1.00000	1.00000	1.00000	Card 8A $C_o(r)$
0.	-0.	-0.	-0.	-0.	-0.	-0.	-0.	-0.	$A_o(r)$
0.	-0.	-0.	-0.	-0.	-0.	-0.	-0.	-0.	$C_x(r)$
0.	-0.	-0.	-0.	-0.	-0.	-0.	-0.	-0.	$A_1(r)$
0.	-0.	-0.	-0.	-0.	-0.	-0.	-0.	-0.	$A_2(r)$
0.	-0.	-0.	-0.	-0.	-0.	-0.	-0.	-0.	$A_3(r)$
0.	-0.	-0.	-0.	-0.	-0.	-0.	-0.	-0.	$A_4(r)$
0.	-0.	-0.	-0.	-0.	-0.	-0.	-0.	-0.	$A_5(r)$
1	1.00000	0.82400	8.00000	1.00000	1.00000	0.			Card 9

OUTPUT DATA

AXIAL INDUCED VELOCITY COMPONENT

RX/RO	0.2500	0.3000	0.4000	0.5000	0.6000	0.7000	0.8000	0.9000	0.9500
X/LT									
0.0199	0.0539	0.0976	0.1211	0.1431	0.1536	0.1554	0.1639	0.1457	0.1325
0.1017	0.0288	0.0539	0.0610	0.0721	0.0774	0.0771	0.0780	0.0773	0.0784
0.2372	0.0109	0.0198	0.0175	0.0205	0.0237	0.0252	0.0290	0.0315	0.0333
0.4083	-0.0095	-0.0193	-0.0295	-0.0342	-0.0323	-0.0270	-0.0193	-0.0107	-0.0004
0.5917	-0.0250	-0.0506	-0.0664	-0.0771	-0.0760	-0.0672	-0.0557	-0.0406	-0.0229
0.7628	-0.0313	-0.0663	-0.0858	-0.1006	-0.0999	-0.0890	-0.0754	-0.0579	-0.0379
0.8983	-0.0319	-0.0712	-0.0933	-0.1102	-0.1093	-0.0973	-0.0817	-0.0624	-0.0409
0.9801	-0.0296	-0.0696	-0.0920	-0.1090	-0.1077	-0.0945	-0.0773	-0.0552	-0.0324

TANGENTIAL INDUCED VELOCITY COMPONENT

RX/RO	0.2500	0.3000	0.4000	0.5000	0.6000	0.7000	0.8000	0.9000	0.9500
X/LT									
0.0199	-0.0928	-0.1283	-0.1131	-0.1007	-0.0855	-0.0706	-0.0625	-0.0475	-0.0402
0.1017	-0.0531	-0.0733	-0.0589	-0.0519	-0.0438	-0.0355	-0.0320	-0.0256	-0.0242
0.2372	-0.0215	-0.0281	-0.0186	-0.0159	-0.0143	-0.0123	-0.0119	-0.0111	-0.0110
0.4083	0.0157	0.0249	0.0265	0.0233	0.0172	0.0113	0.0062	0.0024	-0.0011
0.5917	0.0446	0.0675	0.0622	0.0543	0.0419	0.0296	0.0200	0.0119	0.0055
0.7628	0.0559	0.0877	0.0800	0.0704	0.0586	0.0392	0.0271	0.0173	0.0097
0.8983	0.0542	0.0926	0.0857	0.0763	0.0594	0.0424	0.0291	0.0186	0.0104
0.9801	0.0516	0.0894	0.0838	0.0750	0.0582	0.0409	0.0272	0.0161	0.0078

INDUCED DOWNWASH DUE TO FIRST BLADE ONLY

RX/RO	0.2500	0.3000	0.4000	0.5000	0.6000	0.7000	0.8000	0.9000	0.9500
X/LT									
0.0199	0.1071	0.1612	0.1657	0.1750	0.1758	0.1707	0.1754	0.1532	0.1385
0.1017	0.0601	0.0909	0.0847	0.0889	0.0889	0.0848	0.0836	0.0814	0.0820
0.2372	0.0239	0.0343	0.0254	0.0260	0.0276	0.0280	0.0313	0.0334	0.0350
0.4083	-0.0184	-0.0315	-0.0397	-0.0414	-0.0366	-0.0292	-0.0202	-0.0109	-0.0001
0.5917	-0.0510	-0.0843	-0.0909	-0.0943	-0.0868	-0.0734	-0.0592	-0.0423	-0.0235
0.7628	-0.0639	-0.1099	-0.1173	-0.1228	-0.1140	-0.0972	-0.0801	-0.0604	-0.0391
0.8983	-0.0645	-0.1168	-0.1267	-0.1340	-0.1244	-0.1061	-0.0867	-0.0651	-0.0421
0.9801	-0.0593	-0.1133	-0.1244	-0.1323	-0.1224	-0.1029	-0.0819	-0.0575	-0.0333

RX/RO	0.2500	0.3000	0.4000	0.5000	0.6000	0.7000	0.8000	0.9000	0.9500
P/D	1.1560	1.1577	1.1404	1.1063	1.0673	1.0202	0.9726	0.9252	0.8976
L.E.	1.3607	1.4880	1.7200	1.8480	1.8560	1.7400	1.4800	1.0720	0.7472
CHORD	2.7213	2.9760	3.4400	3.6960	3.7120	3.4800	2.9600	2.1440	1.4943

CAMBER DISTRIBUTION

X/LT									
0.0100	0.0024	0.0036	0.0036	0.0035	0.0030	0.0024	0.0019	0.0011	0.0006
0.1000	0.0172	0.0259	0.0250	0.0240	0.0209	0.0165	0.0126	0.0074	0.0046
0.2000	0.0261	0.0393	0.0365	0.0349	0.0303	0.0240	0.0183	0.0111	0.0071
0.3500	0.0304	0.0451	0.0396	0.0377	0.0333	0.0268	0.0210	0.0132	0.0087
0.5000	0.0240	0.0342	0.0268	0.0256	0.0240	0.0206	0.0177	0.0119	0.0085
0.6500	0.0098	0.0108	0.0023	0.0024	0.0055	0.0078	0.0099	0.0083	0.0073
0.8000	-0.0083	-0.0201	-0.0296	-0.0279	-0.0188	-0.0092	-0.0006	0.0032	0.0051
0.9000	-0.0211	-0.0427	-0.0531	-0.0505	-0.0370	-0.0220	-0.0086	-0.0007	0.0034
0.9900	-0.0319	-0.0630	-0.0745	-0.0712	-0.0536	-0.0335	-0.0156	-0.0040	0.0021

CAMBER RATIO

X/LT									
0.0100	0.0009	0.0012	0.0010	0.0009	0.0008	0.0007	0.0006	0.0005	0.0004
0.1000	0.0063	0.0087	0.0073	0.0065	0.0056	0.0047	0.0043	0.0035	0.0031
0.2000	0.0096	0.0132	0.0106	0.0094	0.0082	0.0069	0.0062	0.0052	0.0047
0.3500	0.0112	0.0151	0.0115	0.0102	0.0090	0.0077	0.0071	0.0062	0.0058
0.5000	0.0088	0.0115	0.0078	0.0069	0.0065	0.0059	0.0060	0.0056	0.0057
0.6500	0.0036	0.0036	0.0007	0.0007	0.0015	0.0022	0.0033	0.0039	0.0049
0.8000	-0.0031	-0.0067	-0.0086	-0.0075	-0.0051	-0.0026	-0.0002	0.0015	0.0034
0.9000	-0.0077	-0.0143	-0.0154	-0.0137	-0.0100	-0.0063	-0.0029	-0.0003	0.0023
0.9900	-0.0117	-0.0212	-0.0217	-0.0193	-0.0144	-0.0096	-0.0053	-0.0019	0.0014

NOTES: 1. Calculation based on one blade only

2. Calculated camber in inches

TABLE 4

Calculated Induced Velocities and Camber Distributions for Propeller 3916G, a = 0.2

CAMBER DISTRIBUTION PROPELLER 3916G A=0.2 XPLA(1-12-64)

INPUT DATA

18									Card 1	(see Appendix A for explanation)
0.00500	0.10000	2.00000150.00000							Card 2	
0.00500	0.01000	0.01600	0.02400	0.03510	0.05000	0.07000	0.09600	0.12900	Card 3	
0.17000	0.22000	0.28000	0.35200	0.44000	0.55200	0.70900	0.94500	1.00000		
8	9	0	9	0	0	0	20		Card 5	
0.01986	0.10166	0.23724	0.40828	0.59172	0.74276	0.89834	0.98014		Card 6	
0.01000	0.10000	0.20000	0.35000	0.50000	0.65000	0.80000	0.90000	0.99000	Card 7	
0.20000	0.30000	0.40000	0.50000	0.60000	0.70000	0.80000	0.90000	1.00000	Card 8	r
0.15400	0.18600	0.21500	0.23100	0.23200	0.21750	0.18500	0.13400	0.02000		$L_d(r)/D$
0.30800	0.37200	0.43000	0.46200	0.46400	0.43500	0.37000	0.26800	0.04000		$L_t(r)/D$
1.86210	1.22835	0.90766	0.70429	0.56622	0.46392	0.38698	0.32722	0.27960		$\tan \beta_i(r)$
0.	0.01695	0.02214	0.02371	0.02230	0.01883	0.01414	0.00856	0.		$\Gamma(r)$
0.25000	0.30000	0.40000	0.50000	0.60000	0.70000	0.80000	0.90000	0.95000		r_o
1.00000	1.00000	1.00000	1.00000	1.00000	1.00000	1.00000	1.00000	1.00000		$V_x(r_o)$
0.14600	0.16902	0.20661	0.22173	0.20765	0.17661	0.13584	0.08937	0.06500		$u_a(r_o)$
0.16010	0.16678	0.16039	0.13704	0.10517	0.07483	0.04889	0.02767	0.01770		$u_t(r_o)$
1.00000	1.00000	1.00000	1.00000	1.00000	1.00000	1.00000	1.00000	1.00000	Card 8A	$C_o(r)$
0.	-0.	-0.	-0.	-0.	-0.	-0.	-0.	-0.		$A_o(r)$
0.	-0.	-0.	-0.	-0.	-0.	-0.	-0.	-0.		$C_g(r)$
0.	-0.	-0.	-0.	-0.	-0.	-0.	-0.	-0.		$A_1(r)$
0.	-0.	-0.	-0.	-0.	-0.	-0.	-0.	-0.		$A_2(r)$
0.	-0.	-0.	-0.	-0.	-0.	-0.	-0.	-0.		$A_3(r)$
0.	-0.	-0.	-0.	-0.	-0.	-0.	-0.	-0.		$A_4(r)$
0.	-0.	-0.	-0.	-0.	-0.	-0.	-0.	-0.		$A_5(r)$
1	1.00000	0.82600	8.00000	1.00000	1.00000	0.			Card 9	

OUTPUT DATA

AXIAL INDUCED VELOCITY COMPONENT

RX/RO	0.2500	0.3000	0.4000	0.5000	0.6000	0.7000	0.8000	0.9000	0.9500
X/LT									
0.0199	0.0585	0.1030	0.1267	0.1496	0.1623	0.1666	0.1796	0.1618	0.1501
0.1017	0.0285	0.0511	0.0555	0.0656	0.0720	0.0738	0.0776	0.0799	0.0847
0.2372	0.0034	0.0057	-0.0023	-0.0024	0.0011	0.0049	0.0120	0.0185	0.0247
0.4083	-0.0148	-0.0294	-0.0431	-0.0499	-0.0479	-0.0409	-0.0309	-0.0193	-0.0055
0.5917	-0.0256	-0.0529	-0.0697	-0.0812	-0.0798	-0.0700	-0.0573	-0.0407	-0.0215
0.7628	-0.0305	-0.0658	-0.0856	-0.1005	-0.0994	-0.0879	-0.0734	-0.0550	-0.0339
0.8983	-0.0308	-0.0699	-0.0918	-0.1084	-0.1072	-0.0947	-0.0785	-0.0585	-0.0361
0.9801	-0.0287	-0.0685	-0.0906	-0.1073	-0.1056	-0.0920	-0.0744	-0.0517	-0.0282

TANGENTIAL INDUCED VELOCITY COMPONENT

RX/RO	0.2500	0.3000	0.4000	0.5000	0.6000	0.7000	0.8000	0.9000	0.9500
X/LT									
0.0199	-0.1002	-0.1355	-0.1186	-0.1055	-0.0907	-0.0762	-0.0689	-0.0531	-0.0459
0.1017	-0.0524	-0.0699	-0.0542	-0.0477	-0.0412	-0.0345	-0.0304	-0.0269	-0.0265
0.2372	-0.0088	-0.0097	-0.0004	-0.0001	-0.0021	-0.0035	-0.0058	-0.0073	-0.0088
0.4083	0.0251	0.0385	0.0393	0.0344	0.0258	0.0174	0.0104	0.0049	0.0001
0.5917	0.0457	0.0704	0.0652	0.0570	0.0439	0.0308	0.0204	0.0118	0.0049
0.7628	0.0543	0.0867	0.0795	0.0702	0.0544	0.0385	0.0242	0.0162	0.0084
0.8983	0.0540	0.0905	0.0842	0.0750	0.0582	0.0412	0.0278	0.0173	0.0089
0.9801	0.0496	0.0875	0.0823	0.0737	0.0570	0.0398	0.0261	0.0150	0.0065

INDUCED DOWNWASH DUE TO FIRST BLADE ONLY

RX/RO	0.2500	0.3000	0.4000	0.5000	0.6000	0.7000	0.8000	0.9000	0.9500
X/LT									
0.0199	0.1158	0.1701	0.1736	0.1831	0.1859	0.1832	0.1923	0.1703	0.1569
0.1017	0.0594	0.0865	0.0775	0.0811	0.0830	0.0814	0.0834	0.0843	0.0887
0.2372	0.0092	0.0111	-0.0014	-0.0019	0.0020	0.0059	0.0133	0.0199	0.0262
0.4083	-0.0291	-0.0485	-0.0583	-0.0606	-0.0543	-0.0444	-0.0325	-0.0199	-0.0053
0.5917	-0.0522	-0.0880	-0.0954	-0.0992	-0.0910	-0.0765	-0.0608	-0.0424	-0.0220
0.7628	-0.0621	-0.1088	-0.1169	-0.1226	-0.1133	-0.0959	-0.0779	-0.0573	-0.0349
0.8983	-0.0620	-0.1144	-0.1245	-0.1318	-0.1219	-0.1032	-0.0833	-0.0610	-0.0371
0.9801	-0.0572	-0.1111	-0.1224	-0.1302	-0.1200	-0.1002	-0.0788	-0.0538	-0.0289

RX/RO	0.2500	0.3000	0.4000	0.5000	0.6000	0.7000	0.8000	0.9000	0.9500
P/D	1.1360	1.1577	1.1426	1.1063	1.0673	1.0202	0.9726	0.9252	0.8976
L.E.	1.3607	1.4880	1.7200	1.8480	1.8560	1.7400	1.4800	1.0720	0.7472
CHORD	2.7213	2.9760	3.4400	3.6960	3.7120	3.4800	2.9600	2.1440	1.4943

CAMBER DISTRIBUTION

X/LT									
0.0100	0.0026	0.0037	0.0038	0.0036	0.0032	0.0026	0.0021	0.0012	0.0007
0.1000	0.0182	0.0267	0.0255	0.0245	0.0215	0.0174	0.0136	0.0081	0.0052
0.2000	0.0258	0.0376	0.0339	0.0324	0.0287	0.0233	0.0185	0.0115	0.0077
0.3500	0.0257	0.0366	0.0295	0.0282	0.0261	0.0221	0.0187	0.0124	0.0087
0.5000	0.0165	0.0213	0.0119	0.0115	0.0131	0.0134	0.0139	0.0104	0.0083
0.6500	0.0017	-0.0036	-0.0142	-0.0133	-0.0066	-0.0002	0.0057	0.0068	0.0071
0.8000	-0.0160	-0.0344	-0.0462	-0.0437	-0.0309	-0.0170	-0.0046	0.0019	0.0051
0.9000	-0.0283	-0.0566	-0.0694	-0.0661	-0.0488	-0.0295	-0.0122	-0.0018	0.0036
0.9900	-0.0387	-0.0764	-0.0904	-0.0864	-0.0651	-0.0407	-0.0190	-0.0049	0.0025

CAMBER RATIO

X/LT									
0.0100	0.0009	0.0013	0.0011	0.0010	0.0009	0.0007	0.0007	0.0005	0.0005
0.1000	0.0047	0.0090	0.0074	0.0066	0.0058	0.0050	0.0046	0.0038	0.0035
0.2000	0.0095	0.0126	0.0098	0.0088	0.0077	0.0067	0.0062	0.0054	0.0051
0.3500	0.0095	0.0123	0.0086	0.0076	0.0070	0.0064	0.0063	0.0058	0.0058
0.5000	0.0061	0.0071	0.0035	0.0031	0.0035	0.0039	0.0047	0.0049	0.0056
0.6500	0.0006	-0.0012	-0.0041	-0.0036	-0.0018	-0.0000	0.0019	0.0032	0.0047
0.8000	-0.0059	-0.0115	-0.0134	-0.0118	-0.0083	-0.0049	-0.0015	0.0009	0.0034
0.9000	-0.0104	-0.0190	-0.0202	-0.0179	-0.0131	-0.0085	-0.0041	-0.0008	0.0024
0.9900	-0.0142	-0.0257	-0.0263	-0.0234	-0.0175	-0.0117	-0.0064	-0.0023	0.0016

NOTES: 1. Calculation based on one blade only

2. Calculated camber in inches

TABLE 5

Calculated Camber Distributions for Propellers 3917A, 3917D, 3917E, 3917F, and 3917G

```
INPUT DATA
     18                                                                                                   Card 1  (see Appendix A for explanation)
 0.00500  0.10000  2.00000150.00000                                                                       Card 2
0.00500 0.01000 0.01600 0.02400 0.03510 0.05000 0.07000 0.09600 0.12900                                   Card 3
0.17000 0.22000 0.28000 0.35200 0.44000 0.55200 0.70900 0.94500 1.00000
      8       9       1       9       0       0       0                                                   Card 5
0.01986 0.10166 0.23724 0.40828 0.59172 0.76276 0.89834 0.98014                                           Card 6
0.01000 0.10000 0.20000 0.35000 0.50000 0.65000 0.80000 0.90000 0.99000                                   Card 7
0.20000 0.30000 0.40000 0.50000 0.60000 0.70000 0.80000 0.90000 1.00000                                   Card 8        r
0.12500 0.20900 0.26400 0.28400 0.27300 0.22700 0.14900 0.03300-0.11300                                                 L_l(r)/D
0.30800 0.37200 0.43000 0.46200 0.46400 0.43500 0.37000 0.26800 0.04000                                                 L_t(r)/D
1.66210 1.22835 0.90766 0.70429 0.56622 0.46392 0.38698 0.32722 0.27960                                                 tan β_i(r)
0.      0.01695 0.02214 0.02371 0.02230 0.01883 0.01414 0.00856 0.                                                      Γ(r)
0.25000 0.30000 0.40000 0.50000 0.60000 0.70000 0.80000 0.90000 0.95000                                                 r_o
1.00000 1.00000 1.00000 1.00000 1.00000 1.00000 1.00000 1.00000 1.00000                                                 V_x(r_o)
0.14500 0.16902 0.20861 0.22173 0.20765 0.17661 0.13584 0.08937 0.06500                                                 u_a(r_o)
0.16010 0.16678 0.16019 0.13704 0.10517 0.07483 0.04889 0.02767 0.01770                                                 u_t(r_o)
1.00000 1.00000 1.00000 1.00000 1.00000 1.00000 1.00000 1.00000 1.00000                                   Card 8A       C_o(r)
0.     -0.     -0.     -0.     -0.     -0.     -0.     -0.     -0.                                                      A_o(r)
0.     -0.     -0.     -0.     -0.     -0.     -0.     -0.     -0.                                                      C_z(r)
0.     -0.     -0.     -0.     -0.     -0.     -0.     -0.     -0.                                                      A_1(r)
0.     -0.     -0.     -0.     -0.     -0.     -0.     -0.     -0.                                                      A_2(r)
0.     -0.     -0.     -0.     -0.     -0.     -0.     -0.     -0.                                                      A_3(r)
0.     -0.     -0.     -0.     -0.     -0.     -0.     -0.     -0.                                                      A_4(r)
0.     -0.     -0.     -0.     -0.     -0.     -0.     -0.     -0.                                                      A_5(r)
      1 1.00000 0.82600 8.00000 1.00000 1.00000 0.                                                         Card 9
```

CAMBER RATIO — PROPELLER 3917A A=1.0

X/LT									
0.0100	0.0011	0.0012	0.0009	0.0008	0.0008	0.0007	0.0007	0.0006	0.0005
0.1000	0.0089	0.0090	0.0061	0.0057	0.0034	0.0051	0.0048	0.0045	0.0038
0.2000	0.0156	0.0145	0.0093	0.0086	0.0080	0.0078	0.0075	0.0073	0.0066
0.3500	0.0238	0.0197	0.0111	0.0103	0.0097	0.0099	0.0098	0.0102	0.0098
0.5000	0.0301	0.0217	0.0101	0.0095	0.0092	0.0103	0.0106	0.0120	0.0124
0.6500	0.0344	0.0206	0.0068	0.0065	0.0068	0.0092	0.0103	0.0129	0.0144
0.8000	0.0364	0.0164	0.0010	0.0013	0.0027	0.0067	0.0088	0.0130	0.0158
0.9000	0.0361	0.0115	-0.0044	-0.0035	-0.0011	0.0042	0.0072	0.0126	0.0161
0.9900	0.0334	0.0044	-0.0113	-0.0096	-0.0060	0.0008	0.0048	0.0114	0.0156

CAMBER RATIO — PROPELLER 3917D A=0.8

X/LT									
0.0100	0.0012	0.0012	0.0009	0.0008	0.0008	0.0008	0.0007	0.0006	0.0005
0.1000	0.0096	0.0093	0.0062	0.0058	0.0055	0.0054	0.0052	0.0049	0.0042
0.2000	0.0166	0.0147	0.0090	0.0084	0.0080	0.0081	0.0079	0.0079	0.0073
0.3500	0.0252	0.0194	0.0100	0.0094	0.0092	0.0097	0.0101	0.0110	0.0108
0.5000	0.0314	0.0204	0.0079	0.0075	0.0078	0.0097	0.0107	0.0127	0.0136
0.6500	0.0351	0.0179	0.0030	0.0031	0.0044	0.0079	0.0099	0.0134	0.0156
0.8000	0.0355	0.0111	-0.0051	-0.0041	-0.0013	0.0043	0.0076	0.0131	0.0167
0.9000	0.0326	0.0035	-0.0128	-0.0109	-0.0067	0.0006	0.0051	0.0119	0.0166
0.9900	0.0284	-0.0046	-0.0205	-0.0177	-0.0121	-0.0033	0.0025	0.0105	0.0160

CAMBER RATIO — PROPELLER 3917E A=0.6

X/LT									
0.0100	0.0013	0.0013	0.0009	0.0008	0.0008	0.0008	0.0008	0.0007	0.0006
0.1000	0.0103	0.0094	0.0062	0.0059	0.0057	0.0057	0.0056	0.0054	0.0047
0.2000	0.0178	0.0150	0.0086	0.0081	0.0080	0.0083	0.0084	0.0086	0.0081
0.3500	0.0266	0.0189	0.0084	0.0081	0.0084	0.0090	0.0105	0.0117	0.0119
0.5000	0.0328	0.0188	0.0049	0.0048	0.0060	0.0089	0.0106	0.0133	0.0147
0.6500	0.0364	0.0132	-0.0025	-0.0018	0.0008	0.0057	0.0088	0.0134	0.0165
0.8000	0.0374	0.0033	-0.0132	-0.0112	-0.0067	0.0007	0.0056	0.0122	0.0169
0.9000	0.0379	-0.0047	-0.0211	-0.0181	-0.0122	-0.0032	0.0029	0.0109	0.0167
0.9900	0.0343	-0.0119	-0.0279	-0.0243	-0.0170	-0.0045	0.0007	0.0098	0.0163

CAMBER RATIO — PROPELLER 3917F A=0.4

X/LT									
0.0100	0.0014	0.0014	0.0010	0.0009	0.0009	0.0009	0.0009	0.0008	0.0006
0.1000	0.0113	0.0100	0.0062	0.0059	0.0059	0.0061	0.0060	0.0057	0.0052
0.2000	0.0192	0.0152	0.0081	0.0077	0.0079	0.0086	0.0089	0.0094	0.0089
0.3500	0.0278	0.0178	0.0064	0.0063	0.0072	0.0094	0.0106	0.0123	0.0127
0.5000	0.0317	0.0145	0.0001	0.0007	0.0029	0.0076	0.0095	0.0129	0.0151
0.6500	0.0311	0.0068	-0.0093	-0.0077	-0.0037	0.0028	0.0068	0.0123	0.0163
0.8000	0.0278	-0.0037	-0.0201	-0.0173	-0.0114	-0.0026	0.0034	0.0109	0.0166
0.9000	0.0239	-0.0114	-0.0277	-0.0240	-0.0163	-0.0063	0.0010	0.0098	0.0164
0.9900	0.0204	-0.0182	-0.0343	-0.0299	-0.0213	-0.0095	-0.0012	0.0087	0.0161

CAMBER RATIO — PROPELLER 3917G A=0.2

X/LT									
0.0100	0.0016	0.0015	0.0010	0.0010	0.0010	0.0010	0.0010	0.0009	0.0007
0.1000	0.0123	0.0105	0.0062	0.0060	0.0061	0.0065	0.0066	0.0064	0.0057
0.2000	0.0202	0.0148	0.0070	0.0068	0.0074	0.0085	0.0091	0.0097	0.0093
0.3500	0.0271	0.0150	0.0031	0.0033	0.0050	0.0078	0.0096	0.0117	0.0126
0.5000	0.0293	0.0100	-0.0046	-0.0035	-0.0004	0.0046	0.0078	0.0118	0.0145
0.6500	0.0250	0.0017	-0.0143	-0.0121	-0.0072	0.0000	0.0049	0.0109	0.0155
0.8000	0.0242	-0.0047	-0.0250	-0.0216	-0.0148	-0.0052	0.0016	0.0096	0.0158
0.9000	0.0236	-0.0113	-0.0324	-0.0282	-0.0199	-0.0087	-0.0008	0.0085	0.0156
0.9900	0.0172	-0.0210	-0.0359	-0.0340	-0.0245	-0.0119	-0.0028	0.0074	0.0154

NOTE: Calculation based on one blade only

TABLE 6

Comparison of Ideal Angle of Attack,
Symmetrical and Skewed Blades, with Two-Dimensional Data

Radius	r/R	0.25	0.30	0.50	0.70	0.90	0.95
Lift Coefficient	C_ℓ	0.180	0.193	0.156	0.100	0.060	0.040
Ideal angle of attack, deg	α_i						
a = 0.8							
two-dimensional		0.28	0.30	0.24	0.15	0.09	0.06
symmetrical blade		0.29	0.50	0.46	0.24	0.07	0.02
skewed blade		-1.60	0.31	1.06	0.23	-0.59	-0.90
a = 0.6							
two-dimensional		0.46	0.50	0.40	0.26	0.15	0.10
symmetrical blade		0.52	0.92	0.83	0.42	0.10	-0.01
skewed blade		-1.37	0.73	1.43	0.40	-0.55	-0.92
a = 0.4							
two-dimensional		0.62	0.67	0.54	0.35	0.20	0.14
symmetrical blade		0.69	1.26	1.14	0.57	0.12	-0.07
skewed blade		-1.15	1.07	1.75	0.57	-0.48	-0.91
a = 0.2							
two-dimensional		0.75	0.80	0.65	0.42	0.25	0.17
symmetrical blade		0.83	1.51	1.38	0.69	0.14	-0.08
skewed blade		-0.96	1.34	1.97	0.72	-0.41	-0.87

TABLE 7
Calculated Induced Velocities and Camber Distributions for Propeller 3916J, Chordwise Load Distribution Corresponding to Angle of Attack

PROPELLER 3916J ANGLE OF ATTACK TERM ONLY XPLA(1-12-65)

INPUT DATA

16									Card 1 (see Appendix A for explanation)
0.00500	0.10000	2.00000150.00000							Card 2
30500	0.01000	0.01600	0.02400	0.03510	0.05000	0.07000	0.09600	0.12900	Card 3
0.17000	0.22000	0.28000	0.35200	0.44000	0.55200	0.70900	0.94500	1.00000	
8	9	0	9	0	0	0	0	-0	Card 5
0.01986	0.10166	0.23724	0.40828	0.59172	0.76276	0.89834	0.98014		Card 6
0.01000	0.10000	0.20000	0.35000	0.50000	0.65000	0.80000	0.90000	0.99000	Card 7
0.20000	0.30000	0.40000	0.50000	0.60000	0.70000	0.80000	0.90000	1.00000	Card 8 r
0.15400	0.18600	0.21500	0.23100	0.22200	0.21750	0.18500	0.13400	0.02000	$L_j(r)/D$
0.30800	0.37200	0.43000	0.46200	0.46400	0.43500	0.37000	0.26800	0.04000	$L_t(r)/D$
1.86210	1.22635	0.90766	0.70429	0.56622	0.46392	0.38698	0.32722	0.27960	$\tan \beta_t(r)$
0.	0.01695	0.02214	0.02371	0.02230	0.01683	0.01414	0.00856	0.	$\Gamma(r)$
0.25000	0.30000	0.40000	0.50000	0.60000	0.70000	0.80000	0.90000	0.95000	r_0
1.00000	1.00000	1.00000	1.00000	1.00000	1.00000	1.00000	1.00000	1.00000	$V_x(r_0)$
0.14500	0.16902	0.20861	0.22173	0.20765	0.17661	0.13584	0.08937	0.06500	$u_a(r_0)$
0.16010	0.16678	0.16039	0.13704	0.10517	0.07483	0.04889	0.02767	0.01770	$u_t(r_0)$
0.	-0.	-0.	-0.	-0.	-0.	-0.	-0.	-0.	Card 8A $C_0(r)$
0.63662	0.63662	0.63662	0.63662	0.63662	0.63662	0.63662	0.63662	0.63662	$A_0(r)$
0.	-0.	-0.	-0.	-0.	-0.	-0.	-0.	-0.	$C_x(r)$
0.	-0.	-0.	-0.	-0.	-0.	-0.	-0.	-0.	$A_1(r)$
0.	-0.	-0.	-0.	-0.	-0.	-0.	-0.	-0.	$A_2(r)$
0.	-0.	-0.	-0.	-0.	-0.	-0.	-0.	-0.	$A_3(r)$
0.	-0.	-0.	-0.	-0.	-0.	-0.	-0.	-0.	$A_4(r)$
0.	-0.	-0.	-0.	-0.	-0.	-0.	-0.	-0.	$A_5(r)$
1	1.00000	0.82600	8.00000	1.00000	1.00000	0.			Card 9

OUTPUT DATA

AXIAL INDUCED VELOCITY COMPONENT

RX/RO	0.2500	0.3000	0.4000	0.5000	0.6000	0.7000	0.8000	0.9000	0.9500
X/LT									
0.0199	-0.0038	-0.0068	-0.0335	-0.0360	-0.0186	0.0067	0.0730	0.0880	0.1368
0.1017	-0.0127	-0.0226	-0.0481	-0.0550	-0.0503	-0.0418	-0.0263	-0.0070	0.0114
0.2372	-0.0177	-0.0339	-0.0548	-0.0636	-0.0603	-0.0514	-0.0372	-0.0219	-0.0104
0.4083	-0.0214	-0.0445	-0.0629	-0.0734	-0.0708	-0.0605	-0.0465	-0.0303	-0.0113
0.5917	-0.0242	-0.0537	-0.0716	-0.0839	-0.0817	-0.0702	-0.0553	-0.0368	-0.0158
0.7628	-0.0263	-0.0607	-0.0796	-0.0937	-0.0916	-0.0791	-0.0634	-0.0440	-0.0222
0.8983	-0.0277	-0.0654	-0.0858	-0.1014	-0.0994	-0.0862	-0.0693	-0.0486	-0.0259
0.9801	-0.0284	-0.0678	-0.0895	-0.1059	-0.1040	-0.0901	-0.0722	-0.0481	-0.0237

TANGENTIAL INDUCED VELOCITY COMPONENT

RX/RO	0.2500	0.3000	0.4000	0.5000	0.6000	0.7000	0.8000	0.9000	0.9500
X/LT									
0.0199	-0.0041	0.0016	0.0249	0.0210	0.0071	-0.0059	-0.0305	-0.0307	-0.0430
0.1017	0.0153	0.0250	0.0399	0.0354	0.0254	0.0166	0.0078	0.0002	-0.0056
0.2372	0.0283	0.0432	0.0487	0.0429	0.0319	0.0215	0.0122	0.0051	0.0010
0.4083	0.0373	0.0589	0.0579	0.0509	0.0384	0.0261	0.0160	0.0081	0.0014
0.5917	0.0429	0.0708	0.0663	0.0586	0.0447	0.0306	0.0194	0.0103	0.0029
0.7628	0.0459	0.0788	0.0732	0.0651	0.0500	0.0346	0.0224	0.0127	0.0047
0.8983	0.0471	0.0833	0.0781	0.0699	0.0540	0.0376	0.0245	0.0142	0.0058
0.9801	0.0472	0.0854	0.0808	0.0727	0.0563	0.0392	0.0255	0.0140	0.0051

INDUCED DOWNWASH DUE TO FIRST BLADE ONLY

RX/RO	0.2500	0.3000	0.4000	0.5000	0.6000	0.7000	0.8000	0.9000	0.9500
X/LT									
0.0199	0.0012	-0.0055	-0.0415	-0.0415	-0.0196	0.0085	0.0791	0.0932	0.1434
0.1017	-0.0198	-0.0336	-0.0624	-0.0653	-0.0562	-0.0449	-0.0274	-0.0067	0.0127
0.2372	-0.0334	-0.0549	-0.0733	-0.0767	-0.0682	-0.0557	-0.0391	-0.0224	-0.0103
0.4083	-0.0429	-0.0738	-0.0855	-0.0893	-0.0806	-0.0659	-0.0492	-0.0313	-0.0112
0.5917	-0.0491	-0.0888	-0.0976	-0.1023	-0.0931	-0.0766	-0.0585	-0.0382	-0.0160
0.7628	-0.0528	-0.0994	-0.1082	-0.1141	-0.1044	-0.0863	-0.0672	-0.0458	-0.0226
0.8983	-0.0545	-0.1059	-0.1160	-0.1232	-0.1131	-0.0941	-0.0735	-0.0506	-0.0265
0.9801	-0.0550	-0.1091	-0.1206	-0.1285	-0.1182	-0.0982	-0.0765	-0.0501	-0.0241

RX/RO	0.2500	0.3000	0.4000	0.5000	0.6000	0.7000	0.8000	0.9000	0.9500
P/D	1.1560	1.1577	1.1406	1.1063	1.0673	1.0202	0.9726	0.9252	0.8976
L.E.	1.3607	1.4880	1.7200	1.8480	1.8560	1.7400	1.4800	1.0720	0.7472
CHORD	2.7213	2.9760	3.4400	3.6960	3.7120	3.4800	2.9600	2.1440	1.4943

CAMBER DISTRIBUTION

X/LT									
0.0100	0.0001	0.0001	-0.0007	-0.0006	-0.0001	0.0004	0.0011	0.0008	0.0008
0.1000	-0.0014	-0.0033	-0.0095	-0.0089	-0.0053	-0.0018	0.0029	0.0029	0.0034
0.2000	-0.0065	-0.0116	-0.0222	-0.0210	-0.0146	-0.0081	-0.0005	0.0019	0.0033
0.3500	-0.0170	-0.0290	-0.0437	-0.0415	-0.0304	-0.0187	-0.0061	-0.0003	0.0027
0.5000	-0.0297	-0.0511	-0.0683	-0.0649	-0.0487	-0.0310	-0.0131	-0.0032	0.0020
0.6500	-0.0440	-0.0768	-0.0957	-0.0910	-0.0693	-0.0449	-0.0211	-0.0066	0.0010
0.8000	-0.0592	-0.1053	-0.1257	-0.1198	-0.0920	-0.0603	-0.0301	-0.0105	-0.0002
0.9000	-0.0698	-0.1256	-0.1471	-0.1405	-0.1085	-0.0715	-0.0368	-0.0135	-0.0012
0.9900	-0.0795	-0.1445	-0.1673	-0.1600	-0.1240	-0.0821	-0.0430	-0.0162	-0.0021

CAMBER RATIO

X/LT									
0.0100	0.0001	0.0000	-0.0002	-0.0002	-0.0000	0.0001	0.0004	0.0004	0.0005
0.1000	-0.0005	-0.0011	-0.0028	-0.0024	-0.0014	-0.0005	0.0010	0.0014	0.0023
0.2000	-0.0024	-0.0039	-0.0065	-0.0057	-0.0039	-0.0023	-0.0002	0.0009	0.0022
0.3600	-0.0062	-0.0098	-0.0127	-0.0112	-0.0082	-0.0054	-0.0021	-0.0001	0.0018
0.5000	-0.0109	-0.0172	-0.0199	-0.0176	-0.0131	-0.0089	-0.0044	-0.0015	0.0013
0.6500	-0.0162	-0.0258	-0.0278	-0.0246	-0.0187	-0.0129	-0.0071	-0.0031	0.0007
0.8000	-0.0218	-0.0354	-0.0365	-0.0324	-0.0248	-0.0173	-0.0102	-0.0049	-0.0001
0.9000	-0.0257	-0.0422	-0.0428	-0.0380	-0.0292	-0.0206	-0.0124	-0.0063	-0.0008
0.9900	-0.0292	-0.0486	-0.0486	-0.0433	-0.0334	-0.0236	-0.0145	-0.0076	-0.0014

NOTES: 1. Calculation based on one blade

2. Calculated camber in inches

TABLE 8
Calculated Induced Velocities and Camber Distributions for Propeller 3916K, Sinusoidal Chordwise Load Distribution

```
PROPELLER  3916K          1ST TERM OF SINE          XPLA(1-12-65)

INPUT DATA
     18                                                                          Card 1  (see Appendix A for explanation)
 0.00500  0.10000  2.000000150.00000                                             Card 2
0.00500 0.01000 0.01600 0.02400 0.03510 0.05000 0.07000 0.09600 0.12900          Card 3
0.17000 0.22000 0.28000 0.35200 0.44000 0.55200 0.70900 0.94500 1.00000
      8       9       0       9       0       0       1      -0      -0          Card 5
0.01984 0.10166 0.23724 0.40828 0.59172 0.76276 0.89834 0.98014                  Card 6
0.01000 0.10000 0.20000 0.35000 0.50000 0.65000 0.80000 0.90000 0.99000          Card 7
0.20000 0.30000 0.40000 0.50000 0.60000 0.70000 0.80000 0.90000 1.00000          Card 8        r
0.18400 0.18600 0.21500 0.23100 0.23200 0.21750 0.18500 0.13400 0.02000                        $L_\ell(r)/D$
0.30800 0.37200 0.43000 0.46200 0.46400 0.43500 0.37000 0.26800 0.04000                        $L_t(r)/D$
1.86210 1.22835 0.90766 0.70429 0.56622 0.46392 0.38698 0.32722 0.27960                        $\tan \beta_i(r)$
0.      0.01695 0.02214 0.02371 0.02230 0.01883 0.01414 0.00856 0.                             $\Gamma(r)$
0.25000 0.30000 0.40000 0.50000 0.60000 0.70000 0.80000 0.90000 0.95000                        $r_o$
1.00000 1.00000 1.00000 1.00000 1.00000 1.00000 1.00000 1.00000 1.00000                        $V_R(r_o)$
0.14880 0.16902 0.20861 0.22173 0.20765 0.17661 0.13584 0.08937 0.06500                        $u_a(r_o)$
0.16010 0.16678 0.16039 0.13704 0.10517 0.07483 0.04889 0.02767 0.01770                        $u_t(r_o)$
0.     -0.     -0.     -0.     -0.     -0.     -0.     -0.     -0.                Card 8A       $C_o(r)$
0.     -0.     -0.     -0.     -0.     -0.     -0.     -0.     -0.                              $A_o(r)$
1.00000 1.00000 1.00000 1.00000 1.00000 1.00000 1.00000 1.00000 1.00000                        $C_\ell(r)$
1.27324 1.27324 1.27324 1.27324 1.27324 1.27324 1.27324 1.27324 1.27324                        $A_1(r)$
0.     -0.     -0.     -0.     -0.     -0.     -0.     -0.     -0.                              $A_2(r)$
0.     -0.     -0.     -0.     -0.     -0.     -0.     -0.     -0.                              $A_3(r)$
0.     -0.     -0.     -0.     -0.     -0.     -0.     -0.     -0.                              $A_4(r)$
0.     -0.     -0.     -0.     -0.     -0.     -0.     -0.     -0.                              $A_5(r)$
      1 1.00000 0.82600 0.00000 1.00000 1.00000 0.                               Card 9

OUTPUT DATA

AXIAL INDUCED VELOCITY COMPONENT

     RX/RO        0.2500       0.3000       0.4000       0.5000       0.6000       0.7000       0.8000       0.9000       0.9500
X/LT
 0.0199           0.0423       0.0860       0.1113       0.1316       0.1346       0.1263       0.1165       0.0964       0.0769
 0.1017           0.0359       0.0723       0.0908       0.1070       0.1095       0.1025       0.0938       0.0816       0.0692
 0.2872           0.0241       0.0483       0.0585       0.0685       0.0699       0.0647       0.0592       0.0509       0.0412
 0.4083           0.0085       0.0170       0.0201       0.0234       0.0238       0.0218       0.0198       0.0162       0.0122
 0.5917          -0.0085      -0.0170      -0.0201      -0.0234      -0.0238      -0.0218      -0.0198      -0.0162      -0.0122
 0.7628          -0.0241      -0.0483      -0.0585      -0.0685      -0.0699      -0.0647      -0.0592      -0.0509      -0.0412
 0.8983          -0.0359      -0.0723      -0.0908      -0.1070      -0.1095      -0.1025      -0.0938      -0.0816      -0.0692
 0.9801          -0.0423      -0.0860      -0.1113      -0.1316      -0.1346      -0.1263      -0.1165      -0.0964      -0.0769

TANGENTIAL INDUCED VELOCITY COMPONENT

     RX/RO        0.2500       0.3000       0.4000       0.5000       0.6000       0.7000       0.8000       0.9000       0.9500
X/LT
 0.0199          -0.0736      -0.1121      -0.1026      -0.0913      -0.0736      -0.0560      -0.0429      -0.0303      -0.0222
 0.1017          -0.0439      -0.0956      -0.0848      -0.0750      -0.0604      -0.0457      -0.0347      -0.0257      -0.0201
 0.2872          -0.0441      -0.0650      -0.0557      -0.0488      -0.0391      -0.0292      -0.0221      -0.0161      -0.0120
 0.4083          -0.0158      -0.0231      -0.0194      -0.0169      -0.0134      -0.0100      -0.0074      -0.0052      -0.0036
 0.5917           0.0158       0.0231       0.0194       0.0169       0.0134       0.0100       0.0074       0.0052       0.0036
 0.7628           0.0441       0.0650       0.0557       0.0488       0.0391       0.0292       0.0221       0.0161       0.0120
 0.8983           0.0439       0.0956       0.0848       0.0750       0.0604       0.0457       0.0347       0.0257       0.0201
 0.9801           0.0736       0.1121       0.1026       0.0913       0.0736       0.0560       0.0429       0.0303       0.0222

INDUCED DOWNWASH DUE TO FIRST BLADE ONLY

     RX/RO        0.2500       0.3000       0.4000       0.5000       0.6000       0.7000       0.8000       0.9000       0.9500
X/LT
 0.0199           0.0847       0.1413       0.1514       0.1602       0.1534       0.1381       0.1242       0.1011       0.0800
 0.1017           0.0731       0.1198       0.1242       0.1307       0.1250       0.1122       0.1000       0.0856       0.0720
 0.2372           0.0501       0.0809       0.0808       0.0841       0.0800       0.0710       0.0632       0.0534       0.0429
 0.4083           0.0178       0.0286       0.0279       0.0288       0.0273       0.0240       0.0211       0.0171       0.0127
 0.5917          -0.0178      -0.0286      -0.0279      -0.0288      -0.0273      -0.0240      -0.0211      -0.0171      -0.0127
 0.7628          -0.0501      -0.0809      -0.0808      -0.0841      -0.0800      -0.0710      -0.0632      -0.0534      -0.0429
 0.8983          -0.0731      -0.1198      -0.1242      -0.1307      -0.1250      -0.1122      -0.1000      -0.0856      -0.0720
 0.9801          -0.0847      -0.1413      -0.1514      -0.1602      -0.1534      -0.1381      -0.1242      -0.1011      -0.0800

     RX/RO        0.2500       0.3000       0.4000       0.5000       0.6000       0.7000       0.8000       0.9000       0.9500
     P/D          1.1560       1.1577       1.1406       1.1063       1.0673       1.0202       0.9726       0.9252       0.8976
     L.E.         1.3607       1.4880       1.7200       1.8480       1.8560       1.7400       1.4800       1.0720       0.7472
     CHORD        2.7213       2.9760       3.4400       3.6960       3.7120       3.4800       2.9600       2.1440       1.4943

CAMBER DISTRIBUTION
X/LT
 0.0100           0.0017       0.0028       0.0030       0.0029       0.0024       0.0017       0.0012       0.0006       0.0003
 0.1000           0.0158       0.0261       0.0267       0.0257       0.0213       0.0157       0.0106       0.0058       0.0031
 0.2000           0.0285       0.0469       0.0472       0.0453       0.0375       0.0276       0.0186       0.0102       0.0056
 0.3600           0.0411       0.0672       0.0668       0.0638       0.0528       0.0387       0.0261       0.0143       0.0077
 0.5000           0.0454       0.0741       0.0733       0.0699       0.0578       0.0423       0.0285       0.0155       0.0083
 0.6500           0.0411       0.0672       0.0668       0.0638       0.0528       0.0387       0.0261       0.0143       0.0077
 0.8000           0.0285       0.0469       0.0472       0.0453       0.0375       0.0276       0.0186       0.0102       0.0056
 0.9000           0.0158       0.0261       0.0267       0.0257       0.0213       0.0157       0.0106       0.0058       0.0031
 0.9900           0.0017       0.0028       0.0030       0.0029       0.0024       0.0017       0.0012       0.0006       0.0003

CAMBER RATIO
X/LT
 0.0100           0.0006       0.0010       0.0009       0.0008       0.0006       0.0005       0.0004       0.0003       0.0002
 0.1000           0.0058       0.0088       0.0078       0.0070       0.0057       0.0045       0.0036       0.0027       0.0021
 0.2000           0.0105       0.0157       0.0137       0.0123       0.0101       0.0079       0.0063       0.0048       0.0037
 0.3600           0.0151       0.0226       0.0194       0.0173       0.0142       0.0111       0.0088       0.0067       0.0052
 0.5000           0.0167       0.0249       0.0213       0.0189       0.0156       0.0122       0.0096       0.0072       0.0056
 0.6500           0.0151       0.0226       0.0194       0.0173       0.0142       0.0111       0.0088       0.0067       0.0052
 0.8000           0.0105       0.0157       0.0137       0.0123       0.0101       0.0079       0.0063       0.0048       0.0037
 0.9000           0.0058       0.0088       0.0078       0.0070       0.0057       0.0045       0.0036       0.0027       0.0021
 0.9900           0.0006       0.0010       0.0009       0.0008       0.0006       0.0005       0.0004       0.0003       0.0002
```

NOTES: 1. Calculation based on one blade

2. Calculated camber in inches

TABLE 9

Calculated Induced Velocities and Camber Distribution for a Rectangular Supercavitating Blade at Zero Cavitation Number with Tulin-Burkhard 2-Term Chordwise Load Distribution

```
CAMBER DISTRIBUTION SUP-CAV TULIN 2-TERM SECTION XPLA(2-1 -65)
INPUT DATA
    18                                                                          Card 1  (see Appendix A for explanation)
 0.00500  0.10000  2.00000150.00000                                             Card 2
0.00600 0.01000 0.01600 0.02406 0.03516 0.05000 0.07000 0.09600 0.12900         Card 3
0.17000 0.22000 0.28000 0.35200 0.44000 0.55200 0.70900 0.94500 1.00000
      8       9       1       9       0       0       2       0       1         Card 5
0.01986 0.10166 0.23724 0.40828 0.59172 0.76276 0.89834 0.98014                 Card 6
0.01000 0.10000 0.20000 0.35000 0.50000 0.65000 0.80000 0.90000 0.99000         Card 7
0.20000 0.30000 0.40000 0.50000 0.60000 0.70000 0.80000 0.90000 1.00000         Card 8
0.05000 0.05000 0.05000 0.05000 0.05000 0.05000 0.05000 0.05000 0.05000
0.10000 0.10000 0.10000 0.10000 0.10000 0.10000 0.10000 0.10000 0.10000

0.      -0.     -0.     -0.     -0.     -0.     -0.     -0.     -0.
0.10000 0.10000 0.10000 0.10000 0.10000 0.10000 0.10000 0.10000 0.10000
0.20000 0.30000 0.40000 0.50000 0.60000 0.70000 0.80000 0.90000 0.95000
1.00000 1.00000 1.00000 1.00000 1.00000 1.00000 1.00000 1.00000 1.00000
0.      -0.     -0.     -0.     -0.     -0.     -0.     -0.     -0.              Card 8A
0.      -0.     -0.     -0.     -0.     -0.     -0.     -0.     -0.
0.      -0.     -0.     -0.     -0.     -0.     -0.     -0.     -0.
0.      -0.     -0.     -0.     -0.     -0.     -0.     -0.     -0.
1.00000 1.00000 1.00000 1.00000 1.00000 1.00000 1.00000 1.00000 1.00000
1.27324 1.27324 1.27324 1.27324 1.27324 1.27324 1.27324 1.27324 1.27324

0.63662-0.63662-0.63662-0.63662-0.63662-0.63662-0.63662-0.63662-0.63662         Card 9
0.      -0.     -0.     -0.     -0.     -0.     -0.     -0.     -0.
0.      -0.     -0.     -0.     -0.     -0.     -0.     -0.     -0.
0.      -0.     -0.     -0.     -0.     -0.     -0.     -0.     -0.
      1 1.00000 0.80000010.00000 0.      1.00000 0.
OUTPUT DATA
```

Card 8:
- r
- $L_f(r)/D$
- $L_c(r)/D$
- $\tan \beta_1(r)$
- $\Gamma(r)$

Card 8A:
- r_0
- $V_x(r_0)$
- $w_a(r_0)$
- $w_t(r_0)$
- $C_0(r)$
- $A_0(r)$
- $C_1(r)$
- $A_1(r)$
- $A_2(r)$
- $A_3(r)$
- $A_4(r)$
- $A_5(r)$

DUE TO BOUND CIRCULATION ONLY

AXIAL INDUCED VELOCITY COMPONENT

RX/RO	0.2500	0.3000	0.4000	0.5000	0.6000	0.7000	0.8000	0.9000	0.9500
X/LT									
0.0199	0.7295	0.8822	1.0014	1.0277	1.0338	1.0269	1.0006	0.9141	0.7976
0.1017	0.9716	1.1352	1.2446	1.2760	1.2881	1.2819	1.2688	1.1739	1.0322
0.2372	1.1766	1.3365	1.4340	1.4608	1.4680	1.4650	1.4468	1.3592	1.2063
0.4083	1.0614	1.1891	1.2583	1.2753	1.2825	1.2809	1.2682	1.2110	1.0787
0.5917	0.4614	0.5221	0.5529	0.5619	0.5622	0.5619	0.5603	0.5457	0.5124
0.7628	-0.5343	-0.5672	-0.5815	-0.5910	-0.5905	-0.5845	-0.5938	-0.5389	-0.4594
0.8983	-1.6081	-1.7347	-1.7990	-1.8164	-1.8504	-1.8200	-1.8971	-1.7633	-1.5892
0.9801	-2.4713	-2.5796	-3.0920	-2.7427	-2.5897	-2.5078	-2.2973	-2.2585	-2.0955

TANGENTIAL INDUCED VELOCITY COMPONENT

RX/RO	0.2500	0.3000	0.4000	0.5000	0.6000	0.7000	0.8000	0.9000	0.9500
X/LT									
0.0199	0.	0.	0.	0.	0.	0.	0.	0.	-0.
0.1017	0.	0.	0.	0.	0.	0.	-0.	-0.	-0.
0.2372	0.	0.	0.	0.	0.	-0.	-0.	-0.	-0.
0.4083	-0.	-0.	-0.	-0.	-0.	-0.	-0.	-0.	-0.
0.5917	-0.	0.	-0.	-0.	-0.	-0.	-0.	-0.	-0.
0.7628	-0.	0.	-0.	-0.	-0.	-0.	-0.	-0.	-0.
0.8983	-0.	0.	-0.	-0.	-0.	-0.	-0.	-0.	-0.
0.9801	-0.	0.	-0.	-0.	-0.	-0.	-0.	-0.	-0.

INDUCED DOWNWASH DUE TO FIRST BLADE ONLY

RX/RO	0.2500	0.3000	0.4000	0.5000	0.6000	0.7000	0.8000	0.9000	0.9500
X/LT									
0.0199	0.7295	0.8822	1.0014	1.0277	1.0338	1.0269	1.0006	0.9141	0.7976
0.1017	0.9716	1.1352	1.2446	1.2760	1.2881	1.2819	1.2688	1.1739	1.0322
0.2372	1.1766	1.3365	1.4340	1.4608	1.4680	1.4650	1.4468	1.3592	1.2063
0.4083	1.0614	1.1891	1.2583	1.2753	1.2825	1.2809	1.2682	1.2110	1.0787
0.5917	0.4614	0.5221	0.5529	0.5619	0.5622	0.5619	0.5603	0.5457	0.5124
0.7628	-0.5343	-0.5672	-0.5815	-0.5910	-0.5905	-0.5845	-0.5938	-0.5389	-0.4594
0.8983	-1.6081	-1.7347	-1.7990	-1.8164	-1.8504	-1.8200	-1.8971	-1.7633	-1.5892
0.9801	-2.4713	-2.5796	-3.0920	-2.7427	-2.5897	-2.5078	-2.2973	-2.2585	-2.0955

RX/RO	0.2500	0.3000	0.4000	0.5000	0.6000	0.7000	0.8000	0.9000	0.9500
P/D	-0.	0.	-0.	-0.	0.	-0.	-0.	0.	-0.
L.E.	0.5000	0.5000	0.5000	0.5000	0.5000	0.5000	0.5000	0.5000	0.5000
CHORD	1.0000	1.0000	1.0000	1.0000	1.0000	1.0000	1.0000	1.0000	1.0000
CAMBER DISTRIBUTION									
X/LT									
0.0100	0.0048	0.0053	0.0051	0.0044	0.0038	0.0033	0.0028	0.0023	0.0019
0.1000	0.0587	0.0635	0.0587	0.0510	0.0443	0.0386	0.0337	0.0277	0.0231
0.2000	0.1350	0.1432	0.1308	0.1132	0.0981	0.0855	0.0747	0.0621	0.0519
0.3500	0.2606	0.2722	0.2450	0.2115	0.1833	0.1599	0.1400	0.1173	0.0986
0.5000	0.3691	0.3824	0.3419	0.2944	0.2550	0.2225	0.1950	0.1645	0.1386
0.6500	0.4251	0.4397	0.3923	0.3376	0.2922	0.2550	0.2237	0.1895	0.1607
0.8000	0.3937	0.4103	0.3672	0.3163	0.2741	0.2394	0.2098	0.1785	0.1524
0.9000	0.3083	0.3265	0.2965	0.2550	0.2201	0.1928	0.1665	0.1427	0.1220
0.9900	0.1745	0.1980	0.1767	0.1598	0.1398	0.1243	0.1069	0.0915	0.0775
CAMBER RATIO									
X/LT									
0.0100	0.0048	0.0053	0.0051	0.0044	0.0038	0.0033	0.0028	0.0023	0.0019
0.1000	0.0587	0.0635	0.0587	0.0510	0.0443	0.0386	0.0337	0.0277	0.0231
0.2000	0.1350	0.1432	0.1308	0.1132	0.0981	0.0855	0.0747	0.0621	0.0519
0.3500	0.2606	0.2722	0.2450	0.2115	0.1833	0.1599	0.1400	0.1173	0.0985
0.5000	0.3691	0.3824	0.3419	0.2944	0.2550	0.2225	0.1950	0.1645	0.1386
0.6500	0.4251	0.4397	0.3923	0.3376	0.2932	0.2550	0.2237	0.1895	0.1607
0.8000	0.3937	0.4103	0.3672	0.3163	0.2741	0.2394	0.2098	0.1785	0.1524
0.9000	0.3083	0.3265	0.2965	0.2550	0.2201	0.1928	0.1665	0.1427	0.1220
0.9900	0.1745	0.1980	0.1767	0.1598	0.1398	0.1243	0.1069	0.0915	0.0775
CAMBER RATIO FOR SUPERCAVITATING BLADE.(CM/LT)/A1									
0.0100	0.0049	0.0053	0.0048	0.0042	0.0037	0.0032	0.0028	0.0023	0.0019
0.1000	0.0626	0.0649	0.0580	0.0500	0.0433	0.0378	0.0332	0.0279	0.0235
0.2000	0.1338	0.1271	0.1127	0.0969	0.0839	0.0733	0.0644	0.0546	0.0461
0.3500	0.1854	0.1897	0.1679	0.1440	0.1244	0.1087	0.0954	0.0814	0.0693
0.5000	0.1983	0.2039	0.180	0.1549	0.1341	0.1172	0.1032	0.0885	0.0762
0.6800	0.1558	0.1631	0.1454	0.1251	0.1085	0.0930	0.0832	0.0722	0.0631
0.8000	0.0546	0.0638	0.0617	0.0524	0.0444	0.0397	0.0317	0.0297	0.0270
0.9000	-0.0483	-0.0362	-0.0270	-0.0213	-0.0193	-0.0140	-0.0178	-0.0120	-0.0090
0.9900	-0.1642	-0.1501	-0.1385	-0.1061	-0.0889	-0.0741	-0.0648	-0.0549	-0.0467

TABLE 10

Calculated Induced Velocities and Camber Distribution for a Rectangular Supercavitating Blade at Zero Cavitation Number with Johnson 3-Term Chordwise Load Distribution

```
CAMBER DISTRIBUTION SUP-CAV JOHNSON 3-TERM SECTION  XPLA(2-1 -65)

INPUT DATA
    16
 0.00000  0.10000  2.00000150.00000                                          Card 1  (see Appendix A for explanation)
0.00000 0.01000 0.01600 0.02400 0.03510 0.05000 0.07000 0.09400 0.12900      Card 2
0.17000 0.22000 0.28000 0.35200 0.44000 0.55200 0.70900 0.94500 1.00000      Card 3
     9       9       0       9       0       0       3       0       1       Card 5
0.01000 0.10000 0.20000 0.35000 0.50000 0.65000 0.80000 0.90000 0.99000      Card 6
0.01000 0.10000 0.20000 0.35000 0.50000 0.65000 0.80000 0.90000 0.99000      Card 7
0.20000 0.30000 0.40000 0.50000 0.60000 0.70000 0.80000 0.90000 1.00000      Card 8
0.00000 0.05000 0.05000 0.05000 0.05000 0.05000 0.05000 0.05000 0.05000
0.10000 0.10000 0.10000 0.10000 0.10000 0.10000 0.10000 0.10000 0.10000
0.      -0.     -0.     -0.     -0.     -0.     -0.     -0.     -0.
0.10000 0.10000 0.10000 0.10000 0.10000 0.10000 0.10000 0.10000 0.10000
0.20000 0.30000 0.40000 0.50000 0.60000 0.70000 0.80000 0.90000 0.95000
1.00000 1.00000 1.00000 1.00000 1.00000 1.00000 1.00000 1.00000 1.00000
0.      -0.     -0.     -0.     -0.     -0.     -0.     -0.     -0.
0.      -0.     -0.     -0.     -0.     -0.     -0.     -0.     -0.
0.      -0.     -0.     -0.     -0.     -0.     -0.     -0.     -0.          Card 8A
0.      -0.     -0.     -0.     -0.     -0.     -0.     -0.     -0.
1.00000 1.00000 1.00000 1.00000 1.00000 1.00000 1.00000 1.00000 1.00000
1.27324 1.27324 1.27324 1.27324 1.27324 1.27324 1.27324 1.27324 1.27324


1.27324-1.27324-1.27324-1.27324-1.27324-1.27324-1.27324-1.27324-1.27324
0.63662 0.63662 0.63662 0.63662 0.63662 0.63662 0.63662 0.63662 0.63662
0.      -0.     -0.     -0.     -0.     -0.     -0.     -0.     -0.
0.      -0.     -0.     -0.     -0.     -0.     -0.     -0.     -0.          Card 9
     1 1.00000 0.00000 0.00000 0.      1.00000 0.
OUTPUT DATA

DUE TO BOUND CIRCULATION ONLY

AXIAL INDUCED VELOCITY COMPONENT
    RX/RO        0.2500      0.3000      0.4000      0.5000      0.6000      0.7000      0.8000      0.9000      0.9500
X/LT
 0.0100          0.6367      0.7244      0.7893      0.8451      0.8693      0.8729      0.8510      0.7704      0.6814
 0.1000          0.3765      0.5029      0.6190      0.6604      0.6787      0.6753      0.6653      0.5715      0.4646
 0.2000          0.4942      0.6403      0.7587      0.8006      0.8145      0.8136      0.7905      0.7023      0.5771
 0.3000          1.0848      1.2688      1.3871      1.4206      1.4297      1.4300      1.4107      1.3131      1.1523
 0.5000          1.6463      1.8430      1.9482      1.9708      1.9783      1.9726      1.9575      1.8812      1.7006
 0.6000          1.5465      1.7151      1.7898      1.8057      1.8042      1.8023      1.7878      1.7488      1.6300
 0.8000          0.1895      0.2542      0.2834      0.2796      0.2814      0.2678      0.2842      0.2674      0.3125
 0.9000         -1.6865     -1.7393     -1.7687     -1.7827     -1.8360     -1.7939     -1.9577     -1.7829     -1.6131
 0.9900         -4.3176     -4.2344     -3.8521     -4.0037     -4.0742     -4.1166     -4.1237     -4.0552     -3.8282

TANGENTIAL INDUCED VELOCITY COMPONENT
    RX/RO        0.2500      0.3000      0.4000      0.5000      0.6000      0.7000      0.8000      0.9000      0.9500
X/LT
 0.0100          0.          0.          0.          0.          0.          0.          0.          0.          0.
 0.1000          0.          0.          0.          0.          0.          0.          0.          0.          -0.
 0.2000          0.          0.          0.          0.          -0.         -0.         -0.         0.          0.
 0.3000          0.          -0.         -0.         -0.         0.          0.          0.          0.          0.
 0.5000          0.          -0.         0.          0.          0.          0.          0.          0.          0.
 0.6000          0.          -0.         0.          0.          0.          0.          0.          0.          0.
 0.8000          0.          -0.         0.          0.          0.          0.          0.          0.          0.
 0.9000          0.          -0.         0.          0.          0.          0.          0.          0.          0.
 0.9900          0.          -0.         0.          0.          0.          0.          0.          0.          0.
INDUCED DOWNWASH DUE TO FIRST BLADE ONLY

    RX/RO        0.2500      0.3000      0.4000      0.5000      0.6000      0.7000      0.8000      0.9000      0.9500
X/LT
 0.0100          0.6367      0.7244      0.7893      0.8451      0.8693      0.8729      0.8510      0.7704      0.6814
 0.1000          0.3765      0.5029      0.6190      0.6604      0.6787      0.6753      0.6653      0.5715      0.4646
 0.2000          0.4942      0.6403      0.7587      0.8006      0.8145      0.8136      0.7905      0.7023      0.5771
 0.3000          1.0848      1.2688      1.3871      1.4206      1.4297      1.4300      1.4107      1.3131      1.1523
 0.5000          1.6463      1.8430      1.9482      1.9708      1.9783      1.9726      1.9575      1.8812      1.7006
 0.6000          1.5465      1.7151      1.7898      1.8057      1.8042      1.8023      1.7878      1.7488      1.6300
 0.8000          0.1895      0.2542      0.2834      0.2796      0.2814      0.2678      0.2842      0.2674      0.3125
 0.9000         -1.6865     -1.7393     -1.7687     -1.7827     -1.8360     -1.7939     -1.9577     -1.7829     -1.6131
 0.9900         -4.3176     -4.2344     -3.8521     -4.0037     -4.0742     -4.1166     -4.1237     -4.0552     -3.8282

    RX/RO        0.2500      0.3000      0.4000      0.5000      0.6000      0.7000      0.8000      0.9000      0.9500
    P/B          0.          -0.         0.          0.          -0.         0.          0.          -0.         0.
    L.E.         0.5000      0.5000      0.5000      0.5000      0.5000      0.5000      0.5000      0.5000      0.5000
    CHORD        1.0000      1.0000      1.0000      1.0000      1.0000      1.0000      1.0000      1.0000      1.0000
CAMBER DISTRIBUTION
X/LT
 0.0100          0.0047      0.0048      0.0043      0.0039      0.0035      0.0031      0.0027      0.0022      0.0018
 0.1000          0.0350      0.0387      0.0370      0.0335      0.0296      0.0260      0.0225      0.0178      0.0144
 0.2000          0.0641      0.0739      0.0727      0.0655      0.0578      0.0505      0.0438      0.0345      0.0273
 0.3000          0.1463      0.1643      0.1571      0.1395      0.1221      0.1069      0.0926      0.0746      0.0599
 0.5000          0.2956      0.3185      0.2943      0.2573      0.2240      0.1959      0.1710      0.1412      0.1164
 0.6000          0.4752      0.4994      0.4516      0.3916      0.3397      0.2970      0.2597      0.2187      0.1840
 0.8000          0.5817      0.6083      0.5467      0.4724      0.4094      0.3575      0.3140      0.2657      0.2270
 0.9000          0.5337      0.5650      0.5104      0.4414      0.3820      0.3337      0.2912      0.2471      0.2121
 0.9900          0.3468      0.3938      0.3728      0.3226      0.2770      0.2430      0.2059      0.1754      0.1487

CAMBER RATIO
X/LT
 0.0100          0.0047      0.0048      0.0043      0.0039      0.0035      0.0031      0.0027      0.0022      0.0018
 0.1000          0.0350      0.0387      0.0370      0.0335      0.0296      0.0260      0.0225      0.0178      0.0144
 0.2000          0.0641      0.0739      0.0727      0.0655      0.0578      0.0505      0.0438      0.0345      0.0273
 0.3000          0.1463      0.1643      0.1571      0.1395      0.1221      0.1069      0.0926      0.0746      0.0599
 0.5000          0.2956      0.3185      0.2943      0.2573      0.2240      0.1959      0.1710      0.1412      0.1164
 0.6000          0.4752      0.4994      0.4516      0.3916      0.3397      0.2970      0.2597      0.2187      0.1840
 0.8000          0.5817      0.6083      0.5467      0.4724      0.4094      0.3575      0.3140      0.2657      0.2270
 0.9000          0.5337      0.5650      0.5104      0.4414      0.3820      0.3337      0.2912      0.2471      0.2121
 0.9900          0.3468      0.3938      0.3728      0.3226      0.2770      0.2430      0.2059      0.1754      0.1487
CAMBER RATIO FOR SUPERCAVITATING BLADE.(CM/LT)/A1
 0.0100          0.0025      0.0028      0.0028      0.0025      0.0022      0.0019      0.0017      0.0013      0.0010
 0.1000          0.0334      0.0379      0.0363      0.0322      0.0281      0.0246      0.0213      0.0172      0.0137
 0.2000          0.1029      0.1105      0.1015      0.0883      0.0767      0.0671      0.0586      0.0486      0.0402
 0.3000          0.2425      0.2518      0.2251      0.1940      0.1679      0.1467      0.1286      0.1093      0.0926
 0.5000          0.3695      0.3797      0.3360      0.2884      0.2492      0.2177      0.1912      0.1642      0.1412
 0.6000          0.4383      0.4418      0.3900      0.3342      0.2888      0.2518      0.2222      0.1908      0.1664
 0.8000          0.3788      0.3894      0.3463      0.2949      0.2507      0.2233      0.1948      0.1683      0.1484
 0.9000          0.2481      0.2721      0.2493      0.2139      0.1822      0.1682      0.1342      0.1134      0.1048
 0.9900          0.0578      0.1029      0.1173      0.0991      0.0811      0.0719      0.0532      0.0489      0.0427
```

TABLE 11

Calculated Induced Velocities and Camber Distribution for a Rectangular Supercavitating Blade at Zero Cavitation Number with Johnson 5-Term Chordwise Load Distribution

```
CAMBER DISTRIBUTION SUP-CAV JOHNSON 5-TERM SECTION  XPLA(2-1 -65)
INPUT DATA
    18                                                                                  Card 1  (see Appendix A for explanation)
 0.00500  0.10000  2.00000150.00000                                                     Card 2
0.00800 0.01000 0.01600 0.02400 0.03510 0.05000 0.07000 0.09600 0.12900                 Card 3
0.17000 0.22000 0.28000 0.35200 0.44000 0.55200 0.70900 0.94500 1.00000
      9       9       1       9       0       0       5       0       1                 Card 5
0.01000 0.10000 0.20000 0.35000 0.50000 0.65000 0.80000 0.90000 0.99000                 Card 6
0.01000 0.10000 0.20000 0.35000 0.50000 0.65000 0.80000 0.90000 0.99000                 Card 7
0.20000 0.30000 0.40000 0.50000 0.60000 0.70000 0.80000 0.90000 1.00000                 Card 8        r
0.05000 0.05000 0.05000 0.05000 0.05000 0.05000 0.05000 0.05000 0.05000                               L_l(r)/D
0.10000 0.10000 0.10000 0.10000 0.10000 0.10000 0.10000 0.10000 0.10000                               L_t(r)/D
0.     -0.     -0.     -0.     -0.     -0.     -0.     -0.     -0.                                   tan β_1(r)
0.10000 0.10000 0.10000 0.10000 0.10000 0.10000 0.10000 0.10000 0.10000                               Γ(r)
0.25000 0.30000 0.40000 0.50000 0.60000 0.70000 0.80000 0.90000 0.95000                               r_o
1.00000 1.00000 1.00000 1.00000 1.00000 1.00000 1.00000 1.00000 1.00000                               V_z(r_o)
0.     -0.     -0.     -0.     -0.     -0.     -0.     -0.     -0.                                   u_θ(r_o)
0.     -0.     -0.     -0.     -0.     -0.     -0.     -0.     -0.                                   u_t(r_o)
0.     -0.     -0.     -0.     -0.     -0.     -0.     -0.     -0.                                   C_o(r)      Card 8A
0.     -0.     -0.     -0.     -0.     -0.     -0.     -0.     -0.                                   A_o(r)
1.00000 1.00000 1.00000 1.00000 1.00000 1.00000 1.00000 1.00000 1.00000                               C_2(r)
1.27324 1.27324 1.27324 1.27324 1.27324 1.27324 1.27324 1.27324 1.27324                               A_1(r)
                                                                                                      A_2(r)
                                                                                                      A_3(r)
1.69764-1.69764-1.69764-1.69764-1.69764-1.69764-1.69764-1.69764-1.69764                               A_4(r)
1.69764 1.69764 1.69764 1.69764 1.69764 1.69764 1.69764 1.69764 1.69764                               A_5(r)
                                                                                                      Card 9

0.84882-0.84882-0.84882-0.84882-0.84882-0.84882-0.84882-0.84882-0.84882
0.42441 0.42441 0.42441 0.42441 0.42441 0.42441 0.42441 0.42441 0.42441
      1 1.00000 0.8000010.00000 0.      1.00000 0.
OUTPUT DATA

DUE TO BOUND CIRCULATION ONLY

AXIAL INDUCED VELOCITY COMPONENT

     RX/RO        0.2500      0.3000      0.4000      0.5000      0.6000      0.7000      0.8000      0.9000      0.9500
X/LT
 0.0100           0.8746      0.8999      0.8825      0.9640      1.0072      1.0251      1.0061      0.9307      0.8534
 0.1000           0.1183      0.2095      0.3194      0.3677      0.3948      0.3952      0.3974      0.3062      0.2134
 0.2000           0.2456      0.3442      0.4606      0.5182      0.5386      0.5395      0.5171      0.4370      0.3395
 0.3500           0.5590      0.6984      0.8331      0.8806      0.8929      0.9007      0.8835      0.7776      0.6553
 0.5000           0.9747      1.1651      1.3071      1.3458      1.3716      1.3710      1.3622      1.2829      1.0941
 0.6500           2.1630      2.4042      2.5337      2.5623      2.5685      2.5817      2.5695      2.5091      2.3036
 0.8000           2.8088      3.0298      3.1281      3.1303      3.1361      3.1210      3.1278      3.0744      2.9716
 0.9000           0.1846      0.2863      0.3078      0.2892      0.1891      0.2555     -0.0605      0.1847      0.2822
 0.9900          -7.7472     -7.2058     -6.0994     -6.4664     -6.6463     -6.7672     -6.8127     -6.7614     -6.4838

TANGENTIAL INDUCED VELOCITY COMPONENT
     RX/RO        0.2500      0.3000      0.4000      0.5000      0.6000      0.7000      0.8000      0.9000      0.9500
X/LT
 0.0100           0.          0.          0.          0.          0.          0.          0.          0.          0.
 0.1000           0.          0.          0.          0.          0.          0.          0.          0.         -0.
 0.2000           0.          0.          0.          0.         -0.         -0.         -0.          0.          0.
 0.3500           0.         -0.         -0.         -0.          0.          0.          0.          0.          0.
 0.5000           0.         -0.          0.          0.          0.          0.          0.          0.          0.
 0.6500           0.         -0.          0.          0.          0.          0.          0.          0.          0.
 0.8000           0.         -0.          0.          0.          0.          0.          0.          0.          0.
 0.9000           0.         -0.          0.          0.          0.          0.          0.          0.          0.
 0.9900           0.         -0.          0.          0.          0.          0.          0.          0.          0.

INDUCED DOWNWASH DUE TO FIRST BLADE ONLY
     RX/RO        0.2500      0.3000      0.4000      0.5000      0.6000      0.7000      0.8000      0.9000      0.9500
X/LT
 0.0100           0.8746      0.8999      0.8825      0.9640      1.0072      1.0251      1.0061      0.9307      0.8534
 0.1000           0.1183      0.2095      0.3194      0.3677      0.3948      0.3952      0.3974      0.3062      0.2134
 0.2000           0.2456      0.3442      0.4606      0.5182      0.5386      0.5395      0.5171      0.4370      0.3395
 0.3600           0.5590      0.6984      0.8331      0.8806      0.8929      0.9007      0.8835      0.7776      0.6553
 0.5000           0.9747      1.1651      1.3071      1.3458      1.3716      1.3710      1.3622      1.2829      1.0941
 0.6500           2.1630      2.4042      2.5337      2.5623      2.5685      2.5817      2.5695      2.5091      2.3036
 0.8000           2.8088      3.0298      3.1281      3.1303      3.1361      3.1210      3.1278      3.0744      2.9716
 0.9000           0.1846      0.2863      0.3078      0.2892      0.1891      0.2555     -0.0605      0.1847      0.2822
 0.9900          -7.7472     -7.2058     -6.0994     -6.4664     -6.6463     -6.7672     -6.8127     -6.7614     -6.4838

     RX/RO        0.2500      0.3000      0.4000      0.5000      0.6000      0.7000      0.8000      0.9000      0.9500
     P/D          0.         -0.          0.          0.         -0.          0.          0.         -0.          0.
     L.E.         0.5000      0.5000      0.5000      0.5000      0.5000      0.5000      0.5000      0.5000      0.5000
     CHORD        1.0000      1.0000      1.0000      1.0000      1.0000      1.0000      1.0000      1.0000      1.0000
CAMBER DISTRIBUTION
X/LT
 0.0100           0.0069      0.0064      0.0052      0.0047      0.0043      0.0038      0.0033      0.0028      0.0024
 0.1000           0.0311      0.0322      0.0294      0.0276      0.0248      0.0223      0.0194      0.0151      0.0122
 0.2000           0.0416      0.0480      0.0488      0.0464      0.0421      0.0373      0.0325      0.0245      0.0187
 0.3600           0.0866      0.0998      0.1015      0.0947      0.0843      0.0747      0.0643      0.0495      0.0384
 0.5000           0.1638      0.1860      0.1848      0.1678      0.1486      0.1309      0.1140      0.0899      0.0708
 0.6500           0.3252      0.3532      0.3340      0.2964      0.2602      0.2290      0.2001      0.1648      0.1341
 0.8000           0.6131      0.6385      0.5812      0.5063      0.4413      0.3873      0.3415      0.2885      0.2451
 0.9000           0.7458      0.7690      0.6918      0.5996      0.5203      0.4571      0.3994      0.3426      0.2962
 0.9900           0.5423      0.5971      0.5663      0.4881      0.4186      0.3692      0.3124      0.2711      0.2330
CAMBER RATIO
X/LT
 0.0100           0.0069      0.0064      0.0052      0.0047      0.0043      0.0038      0.0033      0.0028      0.0024
 0.1000           0.0311      0.0322      0.0294      0.0276      0.0248      0.0223      0.0194      0.0151      0.0122
 0.2000           0.0416      0.0480      0.0488      0.0464      0.0421      0.0373      0.0325      0.0245      0.0187
 0.3500           0.0866      0.0998      0.1015      0.0947      0.0843      0.0747      0.0643      0.0495      0.0384
 0.5000           0.1638      0.1860      0.1848      0.1678      0.1486      0.1309      0.1140      0.0899      0.0708
 0.6500           0.3252      0.3532      0.3340      0.2964      0.2602      0.2290      0.2001      0.1648      0.1341
 0.8000           0.6131      0.6385      0.5812      0.5063      0.4413      0.3873      0.3415      0.2885      0.2451
 0.9000           0.7458      0.7690      0.6918      0.5996      0.5203      0.4571      0.3994      .3426       0.2962
 0.9900           0.5423      0.5971      0.5663      0.4881      0.4186      0.3692      0.3124      0.2711      0.2330
CAMBER RATIO FOR SUPERCAVITATING BLADE.(CM/LT)/AI
 0.0100           0.0016      0.0018      0.0018      0.0017      0.0016      0.0014      0.0012      0.0009      0.0007
 0.1000           0.0175      0.0211      0.0223      0.0208      0.0184      0.0163      0.0139      0.0107      0.0081
 0.2000           0.0525      0.0606      0.0611      0.0551      0.0485      0.0427      0.0372      0.0292      0.0230
 0.3600           0.1482      0.1624      0.1542      0.1359      0.1191      0.1046      0.0915      0.0758      0.0613
 0.5000           0.3305      0.3461      0.3149      0.2732      0.2378      0.2087      0.1836      0.1564      0.1318
 0.6500           0.5700      0.5821      0.5187      0.4457      0.3866      0.3386      0.2999      0.2582      0.2241
 0.8000           0.7274      0.7367      0.6494      0.5562      0.4801      0.4211      0.3684      0.3221      0.2846
 0.9000           0.4605      0.4822      0.6088      0.5199      0.4446      0.3921      0.3338      0.2974      0.2642
 0.9900           0.3784      0.4408      0.4349      0.3651      0.3062      0.2706      0.2207      0.1996      0.1761
```

APPENDIX A

PREPARATION OF INPUT DATA

The input data are essentially identical to those outlined in Appendix B of Reference 2, with the following exceptions:

Revise

Card 5 Format 9I8

Column		
1- 8	NKN	
9-16	NCL	
17-24	NCTR	
25-32	KRN	
33-40	NPT	
41-48	KSP	
49-56	NSIN	Number of terms in sine series, M
57-64	LFCW	Chordwise load factor, percent of chord from leading edge with uniform loading, a Specify LFCW = 100 for a = 1.0 mean line uniform loading = 80 for a = 0.8 mean line, etc. = 0 for all other cases.
65-72	NSC	Control for supercavitating hydrofoil at zero cavitation number Specify NSC = 1 for two-dimensional supercavitating case = 0 for all other cases

Between Card 8 and Card 9 add;

Card 8A (8 cards) Format 9F8.5

At specified input radii of the first card of Card 8

1st card - $C_o(r)$, coefficient of uniform loading term

Specify C_o = 1.0 for uniform (wholly or partially) chordwise loading

= 0.0 for all other cases.

2nd card - $A_o(r)$, coefficient for angle of attack term

Specify A_o = 0.0 for all cases with no angle of attack term

3rd card - $C_2(r)$, control for sine series term

Specify C_2 = 1.0 for loading with sine series term
= 0.0 for all other cases

4th card	$A_1(r)$	
5th card	$A_2(r)$	coefficients for sine series terms
6th card	$A_3(r)$	
7th card	$A_4(r)$	
8th card	$A_5(r)$	

Revise

Card 9 Format (I8, 8F8.5)

Column	
1- 8	NN
9-16	VM
17-24	AJ
25-32	DIA
33-40	SM
41-48	SW

APPENDIX B

FORTRAN LISTING OF COMPUTER PROGRAM

The FORTRAN listing of the computer program follows. The computer also uses the subroutine MATINV and the functions ASINF and ACOSF.

```
      FOR
C     PROPELLER DESIGN BASED ON LIFTING SURFACE THEORY WITH
C     ARBITRARY CHORDWISE LOAD DISTRIBUTION
C     XPLA(FEB 1965)
      DIMENSION DK(20),XL(20),B(9,9),CO(9),AH(10,9),CD(10,9),FAH(20,20),
     XDB(9,16),DC(9),HA(9),BP( 3,9),DE(9),BV(16),DWSH(9,20),EAH(20,18),
     X                XX(20,20),ZZ(20,18),TIT(1[),CM(20,18),CMR(20,18),
     XCC(16,50),XY(50),YX(50),BB(16,50),SY(90),        SAG(50),
     1AGS(50),AB(9,9),DD(9,16),        DWSHT(9,20),            SAGT(50),
     XAGST(50),BQ(16  ),CV(16), VRE(20),  BPP(20),CQ(16),YS(90),
     XR(5,90),  H(25),T(25),SPR(20),A(25,90),NF(25),AS(25,90),AC(25,90),
     XSY(90),SYC(90),UHH(90),VHH(90),UHL.90),UHT(90),VHL(90),VHT(90),
     XUBL(90),UBT(90),VBL(90),VBT(90),DSA(10,35),DSAT(10,35),
     X           WT(20),QT(20),Z(5,90),P(9),VP(90)
      DIMENSION PSIL(90),CPSIL(90),SPSIL(90),PSIT(90),SPSIT(90),
     XCPSIT(90),CPSIO(9,9),PSIO(9,9)
      DIMENSION C(8,9),FHA(20,20)
       COMMON DK,XL,B,CO,AH,CD,FAH,DB,DC,HA,BP,DE,BV,DWSH,EAH,XX,ZZ,TIT,
     1CM,CMR,CC,XY,YX,BB,SY,SAG,AGS,AB,DD,DWSHT,SAGT,AGST,BQ,CV,VRE,BPP,
     2CQ,YS,R,H,T,SPR,A,NF,AS,AC,SYS,SYC,UHH,VHH,UHL,UHT,VHL,VHT,
     3                          UBL,UBT,VBL,VBT,DSA,DSAT,WT,QT,Z,P,VP
      COMMON PSIL,CPSIL,SPSIL,PSIT,SPSIT,CPSIT,CPSIO,PSIO
      COMMON C,SW
      COMMON DFD,FDFD,DFFD,NL,RP,DY,LT,LH,LTH,LTH1,XH,PI,FP,S,NSIN,
     XGTT,KR,KS,SM,NKN,NPT,KSP,LFCW
      COMMON J1,J2,YL,Y1,SL,ST,N,MID,NSC,KRN,NCL
      READ 3,NL
      READ  7,DY,DFD,FDFD,DFFD
      READ 4,(SPR(J),J=1,NL)
C     CALCULATE ANGLE FE, SINE(FE),AND COSINE(FE) TABLES
      CALL SUB1
  101 READ 2,TIT
      READ  3,NKN,NCL,NCTR,KRN,NPT,KSP,NSIN,LFCW,NSC
      READ 4,(DK(J),J=1,NKN)
      READ 4,(XL(J),J=1,NCL)
      READ 4,((B(K,J),J=1,9),K=1,9)
      READ 4,((C(K,J),J=1,9),K=1,8)
      READ  2001,NN,VM,AJ,DIA,SM,SW,DPHI
    1 FORMAT (1H012A6)
    2 FORMAT (12A6)
    3 FORMAT (9I8)
    4 FORMAT (9F8.5)
    7 FORMAT(8F9.5)
 2000 FORMAT(9E13.5)
 2001 FORMAT(I8,8F8.5)
      PRINT 2999
 2999 FORMAT (1H1,33X,44H APPLIED MATHEMATICS LABORATORY PROBLEM XPLA)
      PRINT 3000
 3000 FORMAT(30X,50H PROPELLER DESIGN BASED ON LIFTING SURFACE THEORY )
      PRINT 3002
 3002 FORMAT(36X,38H ARBITRARY CHORDWISE LOAD DISTRIBUTION)
      PRINT 1,TIT
      PRINT 3001
 3001 FORMAT(11H0INPUT DATA)
      PRINT3,NL
      PRINT 7,DY,DFD,FDFD,DFFD
      PRINT4,(SPR(J),J=1,NL)
      PRINT 3,NKN,NCL,NCTR,KRN,NPT,KSP,NSIN,LFCW,NSC
      PRINT 4,(DK(J),J=1,NKN)
      PRINT 4,(XL(J),J=1,NCL)
      PRINT 4,((B(K,J),J=1,9),K=1,9)
      PRINT 4,((C(K,J),J=1,9),K=1,8)
      PRINT 2001,NN,VM,AJ,DIA,SM,SW,DPHI
      DO 2800 J=1,9
 2800 B(4,J)=B(4,J)*B(1,J)*3.1416
      PRINT 2998
 2998 FORMAT(12H0OUTPUT DATA)
C     CALCULATE COEFFICIENTS OF DATA INTERPOLATING MATRIX
      CALL SUB2
 1061 DO 5 J=1,9
      CO(J)=3.1416*B(1,J)/SQRTF((3.1416*B(1,J))**2+B(4,J)**2)
      FT=CO(J)*2./B(1,J)
      AB(2,J)=B(2,J)*VM
      AB(3,J)=B(3,J)*VM
      AB(4,J)=B(4,J)
      AB(5,J)=B(5,J)*6.2832
      AB(6,J)=(AB(2,J)-AB(3,J))*FT
      AB(7,J)=AB(2,J)*FT
      AB(8,J)=AB(3,J)*FT
    5 AB(9,J)=AB(5,J)/AB(8,J)
      DO 9 K=1,8
      KK=K+1
      DO 9 J=1,9
    9 EAH(J,K)=AB(KK,J)
      M11=1
 1184 DO 1183 K=1,9
      DO 1183 J=1,9
 1183 FHA(J,K)=FAH(J,K)
      CALL MATINV(FHA,9,EAH,8,V,ID)
      GOTO (1000,184),ID
  184 PRINT 1002
      GOTO 84
 1000 GO TO(11000,11001),M11
11000 DO 15 J=1,9
      DO 15K=1,6
   15 DB(J,K)=EAH(J,K)
      DO 91 K=1,8
      DO 91 J=1,9
   91 EAH(J,K)=C(K,J)
      M11=2
      GO TO 1184
11001 DO 155 J=1,9
      DO 155 K=1,8
  155 DD(J,K)=EAH(J,K)
      ERASE DWSH,DWSHT,ZZ
      XH=B(1,1)
      PI=1./3.1416
      MID=1
      KR=1
   20 RP=B(6,KR)
      IF(NPT)200,200,2997
 2997 PRINT 2996,RP
 2996 FORMAT(48H0CHORDWISE INTEGRATED VALUES OF VA AND VT AT R0=F5.4)
      PRINT 2993
 2993 FORMAT(9H TIP ZONE)
C     SET UP RADIAL STATIONS OF FIELD POINTS FOR POINT P
  200 CALL SUB3
      LTH1=LTH1
      LTH=LTH
      LT=LT
```

```
      LH=LH
C     INTERPOLATE INPUT DATA AT RADIAL STATIONS OF FIELD POINTS
      ERASE BB,CC
      CALL SUB4
      DO 1405 K=1,3
 1405 BP(K,KR)=BB(K,LTH1)
      ERASE DSA,DSAT
C     SET UP CHORDWISE STATIONS OF FIELD POINTS
      NM=1
      N=1
 7601 L=N
  760 Y=XY(N)
      ALT=ABSF(BB(6,LTH1)-BB(6,N)+BB(7,N))
      ATL=ABSF(BB(6,N)-BB(6,LTH1)+BB(7,LTH1))
      ACT=ALT
      IF(ALT-ATL) 700,701,701
  700 ACT=ATL
  701 DO 411 J=1,16
      CV(J)=CC(J,N)
  411 BV(J)=BB(J,N)
      ERASE Z
      M7=1
      M=1
  231 FMP=6[illegible]FLOATF(M-1)/FLOATF(NN)
      FMPS=[illegible]P)
      FMPC=CO[illegible]MP)
      J=1
  702 SX=AS(L,J)*FMPC+AC(L,J)*FMPS
      CX=AC(L,J)*FMPC-AS(L,J)*FMPS
      S=A(L,J)
      YRPS=ABSF(Y*Y+RP*RP-2.*Y*RP*CX+(BV(3)*S/3.1416)**2)
      VP(J)=YRPS**1.5
      Z(1,J)=Z(1,J)-SX*RP/VP(J)
      Z(5,J)=Z(5,J)+S*CX/VP(J)
      Z(2,J)=Z(2,J)+S*(RP-Y*CX)/VP(J)
      Z(3,J)=Z(3,J)+(RP-Y*(CX+S*SX))/VP(J)
      Z(4,J)=Z(4,J)+Y*(Y-RP*CX)/VP(J)
      GO TO (704,705,706),M7
  704 J=J+1
      IF(A(L,J)-ACT)702,702,710
  710 M=M+1
      IF(M-NN) 231,231,730
  730 DO 719 K=1,5
  719 P(K)=Z(K,1)
      P(6)=AS(L,1)
      P(7)=AC(L,1)
      P(8)=A(L,1)
      P(9)=VP(1)
      KS=1
  758 FP=BB(6,LTH1)-DK(KS)*BB(7,LTH1)
C     CONVERT THETASUBO TO PSISUBO
      CPSIO(KS,KR)=1.-2.*(BB(6,LTH1)-FP)/BB(7,LTH1)
      TP=CPSIO(KS,KR)
      CALL CHECK(TP,PT)
      PSIO(KS,KR)=PT
      YL=BV(6  )-FP
      YT=FP-BV(5)
      SL=ABSF(YL)
      ST=ABSF(YT)
      SL1=SL
      SL2=ST
      IF(SL-ST) 520,520,521
  521 SL1=ST
      SL2=SL
  520 J=1
  523 DO 703 K=1,5
  703 R(K,J)=Z(K,J)
      SY(J)=A(L,J)
      J=J+1
      IF(A(L,J)-SL1) 523,523,5241
 5241 JS1=J-1
      SL1A=SL1-A(L,JS1)
      IF(SL1A-DPHI)1714,524,524
 1714 SL1=SL1+DPHI
  524 M7=2
      J1=J
      DO 708 K=1,5
  708 Z(K,1)=0.
      AS(L,1)=SINF(SL1)
      AC(L,1)=COSF(SL1)
      A(L,1)=SL1
      SY(J1)=SL1
      M=1
      GO TO 231
  705 M=M+1
      IF(M-NN)231,231,712
  712 DO 713 K=1,5
  713 R(K,J1)=Z(K,1)
      JK=J1
      IF(SL-ST)525,526,525
  525 J=J1+1
 5251 IF(A(L,J)-SL2)527,527,5281
 5281 JS2=J-1
      SL2A=SL2-A(L,JS2)
      IF(SL2A-DPHI)1716,528,528
 1716 SL2=SL2+DPHI
      GO TO 523
  527 DO 714 K=1,5
  714 R(K,J)=Z(K,J)
      SY(J)=A(L,J)
      J=J+1
      GO TO 5251
  528 M7=3
      J2=J
      DO 715 K=1,5
  715 Z(K,1)=0.
      SY(J2)=SL2
      AS(L,1)=SINF(SL2)
      AC(L,1)=COSF(SL2)
      A(L,1)=SL2
      M=1
      JK=J2
      GO TO 231
  706 M=M+1
      IF(M-NN)231,231,720
  720 DO 721 K=1,5
  721 R(K,J2)=Z(K,1)
  526 J2=JK
      DO 1721 K=1,5
 1721 Z(K,1)=P(K)
```

```
      VP(1)=P(9)
      AS(L,1)=P(6)
      AC(L,1)=P(7)
      A(L,1)=P(8)
      IF(NPT-KR) 711,2009,711
 2009 IF(KSP-KS) 711,2004,711
 2004 PRINT 4104, FP
 4104 FORMAT(11H THETASUBO=F8.5)
      PRINT 4102, RP,XY(N)
 4102 FORMAT(11H PHI AT RO=F8.5,3X,2HR=F8.5)
      PRINT 2000,(SY(JP),JP=1,J2)
  711 CONTINUE
C     CALCULATE INDUCED VELOCITY COMPONENTS IN TIP AND HUB ZONES
C     CONVERT CHORDWISE STATIONS FROM PHI-COORD TO PSI-COORD
      CALL CONVRT
      ERASE UHL,VHL,UHT,VHT,UBL,VBL,UBT,VBT,UHH,VHH
C     CHORDWISE INTEGRATION
      CALL KERNEL
      KS=KS+1
      IF(KS-NKN)758,758,7591
 7591 CONTINUE
      IF(NPT)759,759,2994
 2994 PRINT 2989,Y
 2989 FORMAT(3H R=F5.4)
      PRINT 2000,(DSA (KS,N),KS=1,NKN)
      PRINT 2000,(DSAT(KS,N),KS=1,NKN)
  759 N=N+1
      GO TO (770,771),NM
  770 IF(N-LT)7601,7601,773
  771 IF(N-LTH)772,772,761
  773 NM=2
      IF(NPT)772,772,2990
 2990 PRINT 2991
 2991 FORMAT(9H HUB ZONE)
  772 L=N-LT
      GO TO 760
  761 CONTINUE
      DO 5392 KS=1,NKN
      DO 539 J=1,LH
      K=LT+J
      YX(J)=XY(K)
      AGS(J)=DSA(KS,K)
      AGST(J)=DSAT(KS ,K)
  539 CONTINUE
      DO 5391 J=1,LT
      SAG(J)=DSA (KS,J)
 5391 SAGT(J)=DSAT(KS,J)
      DWSH(KR,KS)=SIMPUN(XY,SAG,LT)-SIMPUN(YX,AGS,LH)
      DWSHT(KR,KS)=SIMPUN(XY,SAGT,LT)-SIMPUN(YX,AGST,LH)
      DWSH(KR,KS)=DWSH(KR,KS)/12.5664
      DWSHT(KR,KS)=DWSHT(KR,KS)/12.5664
 5392 CONTINUE
C     CALCULATE INDUCED VELOCITY COMPONENTS IN MID ZONE OF THE FIRST
C     BLADE
      ERASE Z,R,SYC,SYS,SY,YS
      ERASE UHL,VHL,UHT,VHT,UBL,VBL,UBT,VBT,UHH,VHH
      ERASE SUHL,SVHL,SUHT,SVHT,SUBL,SVBL,SUBT,SVBT,SUHH,SVHH
      CALL MIDZON
      DO 5393 KS=1,NKN
      DWSH (KR,KS)= DWSH (KR,KS)+WT(KS)
      DWSHT(KR,KS)= DWSHT(KR,KS)+QT(KS)
 5393 CONTINUE
      KR=KR+1
      IF(KR-KRN)20,20,57
   57 DO 60J=1,NKN
      XX(J,1)=1.
      XX(J,2)=DK(J)
      DO 60 K=3,NKN
   60 XX(J,K)=XX(J,K-1)*XX(J,2)
      IF(SM)2017,2018,2017
 2018 PRINT 2019
 2019 FORMAT(30H0DUE TO BOUND CIRCULATION ONLY)
      GO TO 12017
 2017 IF(SW)12017,12018,12017
12018 PRINT 12019
12019 FORMAT(29H0DUE TO FREE CIRCULATION ONLY      )
12017 PRINT 2020
 2020 FORMAT(33H0AXIAL INDUCED VELOCITY COMPONENT)
      PRINT 262,(B(6,J),J=1,KRN)
      PRINT 263
      DO 2021 J=1,NKN
 2021 PRINT 264,DK(J),(DWSH(K,J),K=1,KRN)
      PRINT 2022
 2022 FORMAT(38H0TANGENTIAL INDUCED VELOCITY COMPONENT)
      PRINT 262,(B(6,J),J=1,KRN)
      PRINT 263
      DO 2023 J=1,NKN
 2023 PRINT 264,DK(J),(DWSHT(K,J),K=1,KRN)
   82   JS=KRN
   83 DO 63J=1,KRN
      CCAA =3.1416*B(6,J)/SQRTF((3.1416*B(6,J))**2+B(4,J)**2)
      SBI=SQRTF(ABSF(1.-CCAA*CCAA))
      JJKRN=J+KRN
      DO 63K=1,NKN
   63 ZZ(K,J)=DWSH(J,K)*CCAA-DWSHT(J,K)*SBI
      IF(NN-1)12025,12024,12025
12024 PRINT 2024
 2024 FORMAT(41H0INDUCED DOWNWASH DUE TO FIRST BLADE ONLY)
      GO TO 12026
12025 PRINT 2026
 2026 FORMAT(35H0INDUCED DOWNWASH DUE TO ALL BLADES)
12026 PRINT 262,(B(6,J),J=1,KRN)
      PRINT 263
      DO 2027 J=1,NKN
 2027 PRINT 264,DK(J),(ZZ(J,K),K=1,KRN)
      CALL MATINV(XX,NKN,ZZ,JS,V,ID)
      GOTO (1001,183),ID
  183 PRINT 1002
      GOTO 84
 1001 ERASE CM
      DO 65 J=1,NKN
   65 XX(J,19)=FLOATF(J)
      DO 67J=1,JS
      DO 67K=1,NKN
   67 XX(K,J)=ZZ(K,J)/XX(K,19)
      DO 70J=1,NCL
      XX(1,20)=XL(J)
      DO 73K=2,NKN
   73 XX(K,20)=XX(K-1,20)*XL(J)
      DO 75JJ=1,JS
```

```
      DO 75KK=1,NKN
   75 CM(J,JJ)=XX(KK,JJ)*XX(KK,20)+CM(J,JJ)
   70 CONTINUE
      DO 78J=1,KRN
      BPP(J)=BP(2,J)
      VRE(J)=
     X     SQRTF((3.1416*B(6,J)/AJ-B(9,J))**2+(B(7,J)+B(8,J))**2)
   78 CONTINUE
      DO 77 J=1,JS
      DO 77K=1,NCL
      CMR(K,J)=CM(K,J)/VRE(J)
   77 CM(K,J)=CMR(K,J)*BPP(J)*DIA
      PRINT 262,(B(6,J),J=1,KRN)
  262 FORMAT( /12H       RX/RO ,9F12.4)
      PRINT 266,(BP(3,J),J=1,KRN)
  266 FORMAT(  12H       P/D   ,9F12.4)
      DO 2010 J=1,KRN
      BP(1,J)=DIA*BP(1,J)
 2010 BP(2,J)=DIA*BP(2,J)
   90 PRINT 267,(BP(1,J),J=1,KRN)
  267 FORMAT(  12H       L.E.  ,9F12.4)
      PRINT 268,(BP(2,J),J=1,KRN)
  268 FORMAT(  12H       CHORD ,9F12.4)
      PRINT 2711
 2711 FORMAT(20H0CAMBER DISTRIBUTION)
      PRINT 263
  263 FORMAT(5H X/LT)
      DO 261J=1,NCL
  261 PRINT 264,XL(J),(CM(J,K),K=1,KRN)
      PRINT 270
  270 FORMAT(13H0CAMBER RATIO)
      PRINT 263
      DO 265 J=1,NCL
  265 PRINT 264,XL(J),(CMR(J,K),K=1,KRN)
  264 FORMAT(F8.4,F16.4,8F12.4)
 1002 FORMAT(19H MATRIX IS SINGULAR)
      IF(NSC) 84,84,85
   85 CALL SUPCAV
   84 IF(NCTR)102,100,101
  102 READ 104,NN,    NCTR,    NPT,KSP,LFCW
  104 FORMAT(5I8)
      READ  4,VM,DY,SM,SW
      PRINT 108
  108 FORMAT(53H1CAMBER LINES FOR THE SAME INPUT DATA AS ABOVE EXCEPT)
      PRINT 107,NCTR,NN, VM,DY,SM,       NPT,KSP,LFCW,SW
  107 FORMAT(6H0NCTR=I2,2X,3HNN=I2,2X, 3HVM=F8.5,2X,3HDY=F8.5,2X,3HSM=F8
     X.5,2X,4HNPT=I2,2X,4HKSP=I2,2X,5HLFCW=I3,2X,3HSW=F8.5)
      GO TO 1061
  100 CALL END JOB
      STOP
      END
```

```
       FOR
      SUBROUTINE SUB1
C     A SUBROUTINE FOR XPLA
C     CALCULATE ANGLE FE,SIN(FE),AND COS(FE) TABLES
      COMMON J1,J2,YL,YT,SL,ST,N,MID
      DF=DFD/57.295
      FDF=FDFD/57.295
      DFF=DFFD/57.295
      K=1
      A(K,1)=0.
      AS(K,1)=0.
      AC(K,1)=1.
      I=2
  173 FD=FLOATF(I-1)*DF
      IF(FD-FDF)171,172,172
  172 FD=FDF
  171 A(K,I)=A(K,I-1)+FD
      SS=SINF(FD)
      CS=COSF(FD)
      AC(K,I)=CS*AC(K,I-1)-SS*AS(K,I-1)
      AS(K,I)=CS*AS(K,I-1)+SS*AC(K,I-1)
      I=I+1
      IF(A(K,I-1)-DFF)173,174,174
  174 NF(1)=I
      NFN=NF(1)
      DO 170 K=2,NL
      DO 176 J=K,NFN
      N=J-K+1
      A(K,N)=A(1,J)-A(1,K)
      AS(K,N)=AS(1,J)*AC(1,K)-AC(1,J)*AS(1,K)
      AC(K,N)=AC(1,J)*AC(1,K)+AS(1,J)*AS(1,K)
  176 CONTINUE
      NF(K)=N
  170 CONTINUE
      RETURN
      END
```

```
      FOR
      SUBROUTINE SUB2
C     A SUBROUTINE FOR XPLA
C     CALCULATE COEFFICIENTS OF DATA INTERPOLATING MATRIX
      DIMENSION DK(20),XL(20),B(9,9),CO(9),AH(10,9),CD(10,9),FAH(20,20),
     XDB(9,16),DC(9),HA(9),BP( 3,9),DE(9),BV(16),DWSH(9,20),EAH(20,18),
     X                XX(20,20),ZZ(20,18),TIT(12),CM(20,18),CMR(20,18),
     XCC(16,50),XY(50),YX(50),BB(16,50),SY(90),        SAG(50),
     1AGS(50),AB(9,9),DD(9,16),        DWSHT(9,20),            SAGT(50),
     XAGST(50),BQ(16  ),CV(16), VRE(20),  BPP(20),CQ(16),YS(90),
     XR(5,90),  H(25),T(25),SPR(20),A(25,90),NF(25),AS(25,90),AC(25,90),
     XSYS(90),SYC(90),UHH(90),VHH(90),UHL(90),UHT(90),VHL(90),VHT(90),
     XUBL(90),UBT(90),VBL(90),VBT(90),DSA(10,35),DSAT(10,35),
     X           WT(20),QT(20),Z(5,90),P(9),VP(90)
      DIMENSION PSIL(90),CPSIL(90),SPSIL(90),PSIT(90),SPSIT(90),
     XCPSIT(90),CPSIO(9,9),PSIO(9,9)
      DIMENSION C(8,9),FHA(20,20)
       COMMON DK,XL,B,CO,AH,CD,FAH,DB,DC,HA,BP,DE,BV,DWSH,EAH,XX,ZZ,TIT,
     1CM,CMR,CC,XY,YX,BB,SY,SAG,AGS,AB,DD,DWSHT,SAGT,AGST,BQ,CV,VRE,BPP,
     2CQ,YS,R,H,T,SPR,A,NF,AS,AC,SYS,SYC,UHH,VHH,UHL,UHT,VHL,VHT,
     3                          UBL,UBT,VBL,VBT,DSA,DSAT,WT,QT,Z,P,VP
      COMMON PSIL,CPSIL,SPSIL,PSIT,SPSIT,CPSIT,CPSIO,PSIO
      COMMON C,SW
      COMMON DFD,FDFD,DFFD,NL,RP,DY,LT,LH,LTH,LTH1,XH,PI,FP,S,NSIN,
     XGTT,KR,KS,SM,NKN,NPT,KSP,LFCW
      COMMON J1,J2,YL,YT,SL,ST,N,MID
      DO 5 J=1,9
      AH(2,J)=(1.+B(1,1)-2.*B(1,J))/(1.-B(1,1))
      CD(2,J)=SQRTF(1.-AH(2,J)**2)
      AH(1,J)=1.
    5 CD(1,J)=0.
      AH(2,1)=1.
      AH(2,9)=-1.
      CD(2,1)=0.
      CD(2,9)=0.
      DO 6 J=3,10
      L=J-1
      DO 6K=1,9
      AH(J,K)=AH(L,K)*AH(2,K)-CD(L,K)*CD(2,K)
    6 CD(J,K)=CD(L,K)*AH(2,K)+AH(L,K)*CD(2,K)
  106 DO 9J=1,9
      DO 11K=1,9
   11 FAH(J,K)=AH(K,J)
    9 CONTINUE
      RETURN
      END
```

```
      FOR
      SUBROUTINE SUB3
C     A SUBROUTINE FOR XPLA
C     SET UP RADIAL STATIONS OF FIELD POINTS FOR POINT P
      DIMENSION DK(20),XL(20),B(9,9),CO(9),AH(10,9),CD(10,9),FAH(20,20),
     XDB(9,16),DC(9),HA(9),BP( 3,9),DE(9),BV(16),DWSH(9,20),EAH(20,18),
     X                XX(20,20),ZZ(20,18),TIT(12),CM(20,18),CMR(20,18),
     XCC(16,50),XY(50),YX(50),BB(16,50),SY(90),        SAG(50),
     1AGS(50),AB(9,9),DD(9,16),        DWSHT(9,20),            SAGT(50),
     XAGST(50),BQ(16  ),CV(16), VRE(20),  BPP(20),CQ(16),YS(90),
     XR(5,90),  H(25),T(25),SPR(20),A(25,90),NF(25),AS(25,90),AC(25,90),
     XSYS(90),SYC(90),UHH(90),VHH(90),UHL(90),UHT(90),VHL(90),VHT(90),
     XUBL(90),UBT(90),VBL(90),VBT(90),DSA(10,35),DSAT(10,35),
     X           WT(20),QT(20),Z(5,90),P(9),VP(90)
      DIMENSION PSIL(90),CPSIL(90),SPSIL(90),PSIT(90),SPSIT(90),
     XCPSIT(90),CPSIO(9,9),PSIO(9,9)
      DIMENSION C(8,9),FHA(20,20)
       COMMON DK,XL,B,CO,AH,CD,FAH,DB,DC,HA,BP,DE,BV,DWSH,EAH,XX,ZZ,TIT,
     1CM,CMR,CC,XY,YX,BB,SY,SAG,AGS,AB,DD,DWSHT,SAGT,AGST,BQ,CV,VRE,BPP,
     2CQ,YS,R,H,T,SPR,A,NF,AS,AC,SYS,SYC,UHH,VHH,UHL,UHT,VHL,VHT,
     3                          UBL,UBT,VBL,VBT,DSA,DSAT,WT,QT,Z,P,VP
      COMMON PSIL,CPSIL,SPSIL,PSIT,SPSIT,CPSIT,CPSIO,PSIO
      COMMON C,SW
      COMMON DFD,FDFD,DFFD,NL,RP,DY,LT,LH,LTH,LTH1,XH,PI,FP,S,NSIN,
     XGTT,KR,KS,SM,NKN,NPT,KSP,LFCW
      COMMON J1,J2,YL,YT,SL,ST,N,MID
      J=1
      T(1)=RP+DY
  201 J=J+1
      T(J)=T(1)+SPR(J-1)
      IF(T(J)-.99  )201,202,202
  202 T(J)=.99
      LT=J
      J=1
      H(1)=RP-DY
  203 J=J+1
      H(J)=H(1)-SPR(J-1)
      IF(H(J)-XH-  .01)204,204,203
  204 H(J)=XH+  .01
      LH=J
      LTH=LT+LH
      LTH1=1+LTH
      DO 205 J=1,LT
  205 XY(J)=T(J)
      DO 206 J=1,LH
      JJ=J+LT
  206 XY(JJ)=H(J)
      XY(LTH1)=RP
      RETURN
      END
```

```
      FOR
      SUBROUTINE SUB4
C     A SUBROUTINE FOR XPLA
C     INTERPOLATE INPUT DATA AT RADIAL STATIONS OF FIELD POINTS
      DIMENSION DK(20),XL(20),B(9,9),CO(9),AH(10,9),CD(10,9),FAH(20,20),
     XDB(9,16),DC(9),HA(9),BP( 3,9),DE(9),BV(16),DWSH(9,20),EAH(20,18),
     X                XX(20,20),ZZ(20,18),TIT(12),CM(20,18),CMR(20,18),
     XCC(16,50),XY(50),YX(50),BB(16,50),SY(90),        SAG(50),
     1AGS(50),AB(9,9),DD(9,16),        DWSHT(9,20),            SAGT(50),
     XAGST(50),BQ(16  ),CV(16), VRE(20),  BPP(20),CQ(16),YS(90),
     XR(5,90),  H(25),T(25),SPR(20),A(25,90),NF(25),AS(25,90),AC(25,90),
     XSYS(90),SYC(90),UHH(90),VHH(90),UHL(90),UHT(90),VHL(90),VHT(90),
     XUBL(90),UBT(90),VBL(90),VBT(90),DSA(10,35),DSAT(10,35),
     X           WT(20),QT(20),Z(5,90),P(9),VP(90)
      DIMENSION PSIL(90),CPSIL(90),SPSIL(90),PSIT(90),SPSIT(90),
     XCPSIT(90),CPSIO(9,9),PSIO(9,9)
      DIMENSION C(8,9),FHA(20,20)
       COMMON DK,XL,B,CO,AH,CD,FAH,DB,DC,HA,BP,DE,BV,DWSH,EAH,XX,ZZ,TIT,
     1CM,CMR,CC,XY,YX,BB,SY,SAG,AGS,AB,DD,DWSHT,SAGT,AGST,BQ,CV,VRE,BPP,
     2CQ,YS,R,H,T,SPR,A,NF,AS,AC,SYS,SYC,UHH,VHH,UHL,UHT,VHL,VHT,
     3                              UBL,UBT,VBL,VBT,DSA,DSAT,WT,QT,Z,P,VP
      COMMON PSIL,CPSIL,SPSIL,PS'T,SPSIT,CPSIT,CPSIO,PSIO
      COMMON C,SW
      COMMON DFD,FDFD,DFFD,NL,*P,DY,LT,LH,LTH,LTH1,XH,PI,FP,S,NSIN,
     XGTT,KR,KS,SM,NKN,NPT,KSP,LFCW
      COMMON J1,J2,YL,YT,SL,ST,N,MID
      DO 405 L=1,LTH1
      X=XY(L)
   21 CY=(1.+XH-2.*X)/(1.-XH)
      SZ=SQRTF(1.-CY*CY)
      HA(1)=1.
      HA(2)=CY
      DC(1)=0.
      DC(2)=SZ
      DO 17J=3,9
      I=J-1
      HA(J)=HA(I)*HA(2)-DC(I)*DC(2)
   17 DC(J)=DC(I)*HA(2)+HA(I)*DC(2)
      DO 19 J=1,9
   19 DE(J)=-FLOATF(J-1)*DC(J)
      DO 22J=1,9
      DO 22K=1,8
      DD(J,K+8)=DD(J,K)*DE(J)
   22 DB(J,K+8)=DB(J,K)*DE(J)
   23 DO 25 K=1,8
      DO 25J=1,9
      CC(K,L)=CC(K,L)+DD(J,K)*HA(J)
      CC(K+8,L)=CC(K+8,L)+DD(J,K+8)*2./((1.-XH)*DC(2))
      BB(K+8,L)=BB(K+8,L)+DB(J,K+8)*2./((1.-XH)*DC(2))
   25 BB(K,L)=BB(K,L)+DB(J,K)*HA(J)
  405 CONTINUE
      RETURN
      END
```

```
      FOR
      FUNCTION  SIMPUN(X,Y,N)
      DIMENSION X(200 ),Y( 200 )
      SIMPUN=0.
      T=0.
      DX1=X(2)-X(1)
      Q1=(Y(2)-Y(1))/DX1
      IF(N-2)20,21,5
   21 SIMPUN=(Y(2)+Y(1))*DX1/2.
      GO TO 20
    5 DO 18 I=3,N
      DX2=X(I)-X(I-1)
      Q2=(Y(I)-Y(I-1))/DX2
      A=(Q2-Q1)/(DX1+DX2)
      B2=.5*(Q1+A*DX1)
      A3=A/3.
      S=((A3*DX1-B2)*DX1+Y(I-1))*DX1
      SIMPUN=SIMPUN+(T+S)*.5
      T=((A3*DX2+B2)*DX2+Y(I-1))*DX2
      DX1=DX2
      Q1=Q2
      IF(I-3)18,17,18
   17 SIMPUN=SIMPUN+SIMPUN
   18 CONTINUE
       SIMPUN=SIMPUN+T
   20 RETURN
       END
```

```
      FOR
      SUBROUTINE CHECK(X,Y)
C     CHECK SIGN OF ARGUMENT FOR ACOS FUNCTION
      IF(X) 1,3,3
    1 X=ABSF(X)
      Y=ASINF(X)
      Y=Y+1.570795
      GO TO 2
    3 Y=ACOSF(X)
    2 RETURN
      END
```

```
      FOR
      SUBROUTINE CONVRT
      A SUBROUTINE FOR XPLA
      CONVERT CHORDWISE STATIONS FROM PHI-COORD TO PSI-COORD
      DIMENSION DK(20),XL(20),B(9,9),CO(9),AH(10,9),CD(10,9),FAH(20,20),
     XDB(9,16),DC(9),HA(9),BP( 3,9),DE(9),BV(15),DWSH(9,20),EAH(20,18),
     X                XX(20,20),ZZ(20,18),TIT(12),CM(20,18),CMR(20,18),
     XCC(16,50),XY(50),YX(50),BB(16,50),SY(90),        SAG(50),
     1AGS(50),AB(9,9),DD(9,16),       DWSHT(9,20),            SAGT(50),
     XAGST(50),BQ(16  ),CV(16), VRE(20),  BPP(20),CQ(16),YS(90),
     XR(5,90),  H(25),T(25),SPR(20),A(25,90),NF(25),AS(25,90),AC(25,90),
     XSYS(90),SYC(90),UHH(90),VHH(90),UHL(90),UHT(90),VHL(90),VHT(90),
     XUBL(90),UBT(90),VBL(90),VBT(90),DSA(10,35),DSAT(10,35),
     X          WT(20),QT(20),Z(5,90),P(9),VP(90)
      DIMENSION PSIL(90),CPSIL(90),SPSIL(90),PSIT(90),SPSIT(90),
     XCPSIT(90),CPSIO(9,9),PSIO(9,9)
      DIMENSION C(8,9),FHA(20,20)
       COMMON DK,XL,B,CO,AH,CD,FAH,DB,DC,HA,BP,DE,BV,DWSH,EAH,XX,ZZ,TIT,
     1CM,CMR,CC,XY,YX,BB,SY,SAG,AGS,AB,DD,DWSHT,SAGT,AGST,BQ,CV,VRE,BPP,
     2CQ,YS,R,H,T,SPR,A,NF,AS,AC,SYS,SYC,UHH,VHH,UHL,UHT,VHL,VHT,
     3                          UBL,UBT,VBL,VBT,DSA,DSAT,WT,QT,Z,P,VP
      COMMON PSIL,CPSIL,SPSIL,PSIT,SPSIT,CPSIT,CPSIO,PSIO
      COMMON C,SW
      COMMON DFD,FDFD,DFFD,NL,RP,DY,LT,LH,LTH,LTH1,XH,PI,FP,S,NSIN,
     XGTT,KR,KS,SM,NKN,NPT,KSP,LFCW
      COMMON J1,J2,YL,YT,SL,ST,N,MID
      ERASE  PSIL,CPSIL,SPSIL,PSIT,CPSIT,SPSIT
      JK=0
      JS=1
      JE=J1
      IF(YL) 10,11,11
   11 IF(YT) 12,12,14
   14 IF(SL-ST) 1,1,2
    1 JET=J2
      GO TO 13
    2 JE=J2
      JET=J1
      GO TO 13
   10 JK=J1-1
      JET=J2-J1+1
      GO TO 21
   12 JK=J1-1
      JE =J2-J1+1
      JET=J1
      GO TO 27
   13 DO 15 J=JS,JE
      CPSIL(J)=1.-(2./BV(7))*(BV(6)-BB(6,LTH1)-   SY(J )+BB(7,LTH1)/2.*
     X(1.-CPSIO(KS,KR)))
      TP=CPSIL(J)
      CALL CHECK(TP,PT)
      PSIL(J)=PT
   15 SPSIL(J)=SQRTF(1.-CPSIL(J)*CPSIL(J))
   26 DO  25  J=1 ,JET
      CPSIT(J)=1.-(2./BV(7))*(BV(6)-BB(6,LTH1)+   SY(J )+BB(7,LTH1)/2.*
     X(1.-CPSIO(KS,KR)))
      TP=CPSIT(J)
      CALL CHECK(TP,PT)
      PSIT(J)=PT
   25 SPSIT(J)=SQRTF(1.-CPSIT(J)*CPSIT(J))
      GO TO 29
   21 DO 22 J=1,JE
      CPSIL(J)=1.-2.*SY(J)/SL
      TP=CPSIL(J)
      CALL CHECK(TP,PT)
      PSIL(J)=PT
   22 SPSIL(J)=SQRTF(1.-CPSIL(J)*CPSIL(J))
      DO 31 J=1,JET
      JJ=J+JK
      CPSIT(J)=1.-2.*(SY(JJ)-SL)/(ST-SL)
      TP=CPSIT(J)
      CALL CHECK(TP,PT)
      PSIT(J)=PT
   31 SPSIT(J)=SQRTF(1.-CPSIT(J)*CPSIT(J))
      GO TO 29
   27 DO 28 J=1,JET
      CPSIT(J)=-(1.-SY(J)*2./ST)
      TP=CPSIT(J)
      CALL CHECK(TP,PT)
      PSIT(J)=PT
   28 SPSIT(J)=SQRTF(1.-CPSIT(J)*CPSIT(J))
      DO 33 J=1,JE
      JJ=J+JK
      CPSIL(J)=-1.+2.*(SY(JJ)-ST)/(SL-ST)
      TP=CPSIL(J)
      CALL CHECK(TP,PT)
      PSIL(J)=PT
   33 SPSIL(J)=SQRTF(1.-CPSIL(J)*CPSIL(J))
   29 IF(KR-NPT) 197,39,197
   39 IF(KS-KSP) 197,195,197
  195 PRINT 199
  199 FORMAT(20H PSI IN L.E. PORTION)
      PRINT 2000,(PSIL(J),J=1,JE)
      PRINT 198
  198 FORMAT(20H PSI IN T.E. PORTION)
      PRINT 2000,(PSIT(J),J=1,JET)
  197 CONTINUE
 2000 FORMAT(9E13.5)
      RETURN
      END
```

```
      FOR
      SUBROUTINE  KERNEL
C     PSI-INTEGRATION
C     A SUBROUTINE FOR XPLA
      DIMENSION DK(20),XL(20),B(9,9),CO(9),AH(10,9),CD(10,9),FAH(20,20),
     XDB(9,16),DC(9),HA(9),BP( 3,9),DE(9),BV(16),DWSH(9,20),EAH(20,18),
     X                XX(20,20),ZZ(20,18),T.T(12),CM(20,18),CMR(20,18),
     XCC(16,50),XY(50),YX(50),BB(16,50),SY(90),        SAG(50),
     1AGS(50),AB(9,9),DD(9,16),        DWSHT(9,20),          SAGT(50),
     XAGST(50),BQ(16  ),CV(16), VRE(20),  BPP(20),CQ(16),YS(90),
     XR(5,90),  H(25),T(25),SPR(20),A(25,90),NF(25),AS(25,90),AC(25,90),
     XSYS(90),SYC(90),UHH(90),VHH(90),UHL(90),UHT(90),VHL(90),VHT(90),
     XUBL(90),UBT(90),VBL(90),VBT(90),DSA(10,35),DSAT(10,35),
     X           WT(20),QT(20),Z(5,90),P(9),VP(90)
      DIMENSION PSIL(90),CPSIL(90),SPSIL(90),PSIT(90),SPSIT(90),
     XCPSIT(90),CPSIO(9,9),PSIO(9,9)
      DIMENSION C(9,9),FHA(20,20)
       COMMON DK,XL,B,CO,AH,CD,FAH,DB,DC,HA,BP,DE,BV,DWSH,EAH,XX,ZZ,TIT,
     1CM,CMR,CC,XY,YX,BB,SY,SAG,AGS,AB,DD,DWSHT,SAGT,AGST,BQ,CV,VRE,BPP,
     2CQ,YS,R,H,T,SPR,A,NF,AS,AC,SYS,SYC,UHH,VHH,UHL,UHT,VHL,VHT,
     3                          UBL,UBT,VBL,VBT,DSA,DSAT,WT,QT,Z,P,VP
      COMMON PSIL,CPSIL,SPSIL,PSIT,SPSIT,CPSIT,CPSIO,PSIO
      COMMON C,SW
      COMMON DFD,FDFD,DFFD,NL,RP,DY,LT,LH,LTH,LTH1,XH,PI,FP,S,NSIN,
     XGTT,KR,KS,SM,NKN,NPT,KSP,LFCW
      COMMON J1,J2,YL,Y1,SL,ST,N,MID
      ERASE SUHL,SVHL,SUHT,SVHT,SUBL,SVBL,SUBT,SVBT,SUHH,SVHH
      JE=J1
      SLM=1.
      MLT=1
      M=1
      TL=1.
      IF(YL) 10, 11,11
   10 JE =J2-J1+1
      KT=JE
      KL=0
      JK=J1-1
      MLT=2
      M=2
      DO 9     J=1,J1
      UHH(J)=-BV(12)*R(4,J)
    9 VHH(J)=-BV(12)*R(3,J)*BV(3)/3.1416
      SUHH=SIMPUN(SY,UHH,J1)
      SVHH=SIMPUN(SY,VHH,J1)
      ERASE UHH,VHH
      GO TO 99
   11 IF(YT) 12,12,14
   12 JK=J1-1
      JE=J2-J1+1
      KT=0
      KL=JE
      MLT=1.
      SLM=0.
      M=2
      TL=1.
      DO  98   J=1,J1
      UHH(J)= BV(12)*R(4,J)
   98 VHH(J)= BV(12)*R(3,J)*BV(3)/3.1416
      SUHH=SIMPUN(SY,UHH,J1)
      SVHH=SIMPUN(SY,VHH,J1)
      ERASE UHH,VHH
      GO TO 99
   14 JK=0.
      IF(SL-ST) 1,1,2
    1 JET=J2
      KL=J1
      KT=J2
      GO TO 99
    2 JE=J2
      JET=J1
      KL=J2
      KT=J1
C     CALCULATE INTEGRANDS
   99 DO   90 J= 1,JE
      JJ=J+JK
      GO TO (95,97),MID
   95 UH=R(4,JJ)
      VH=BV(3)*R(3,JJ)/3.1416
      UB=R(1,JJ)
      VB=(BV(3)*R(5,JJ)+R(2,JJ)*BV(1))/3.1416
      GO TO 96
   97 UH=R(1,J)
      VH=R(2,J)*BV(3)/3.1416
      UB=-R(4,J)*RP*SYS(J)
      VB=R(3,J)*Z(5,J)/3.1416
   96 GO TO ( 3,4),MLT
    3 S=PSIL(J)
      CX=CPSIL(J)
      SX=SPSIL(J)
      GO TO  5
    4 S=PSIT(J)
      CX=CPSIT(J)
      SX=SPSIT(J)
    5 FF2=2.*S
      FF2S=SINF(FF2)
      FF2C=COSF(FF2)
      AQ=(1.-CX)*.5
      PSIPS=2./BV(7)*(BV(14)-BV(15)*AQ)
      O=BV(7)/2.
      OS=BV(7)*SX/2.
   53 ERASE SUM1,SUM2
      IF(CV(3)) 904,905,904
  904 DO 6 KN=1,NSIN
      K3=3+KN
      K11=11+KN
      SI=S*FLOATF(KN)
      SIX=SINF(SI)
      SUM1=SUM1+CV(K3)*SIX
      IF(KN-1) 51,50,51
   50 GS1=(CV(4)*BV(12)+CV(12)*BV(4))*(S-.5*FF2S)*OS
     X      +CV(4)*BV(4)*PSIPS*O*(1.-FF2C
      GO TO 6
   51 IP=1+KN
      IM=KN-1
      FSP=FLOATF(IP)*S
      FSM=FLOATF(IM)*S
      FSPS=SINF(FSP)
      FSMS=SINF(FSM)
      FSPC=COSF(FSP)
      FSMC=COSF(FSM)
```

```
   54 FN=FSMS/FLOATF(IM)-FSPS/FLOATF(IP)
      FNP=PSIPS*Q*(FSMC-FSPC)
      SUM2=SUM2+((CV(K3)*BV(12)+CV(K11)*BV(4))*FN*QS+CV(K3)*BV(4)*FNP)
    6 CONTINUE
      GAMAS=BV(8)*SUM1 *QS
      GSP=.25*(GS1+SUM2)
      GO TO 911
  905 GAMAS=0.
      GSP=0.
  911 IF(CV(2)) 906,917,906
  917 GAMAA=0.
      GAP=0.
      GO TO 9071
  906 GAMAA=CV(2)*BV(4)*(1.-AQ)
      GAP=(CV(2)*BV(12)+CV(10)*BV(4))*.5*(S+SX)*QS+CV(2)*BV(4)*(1.-AQ)
     X       *PSIPS*Q
 9071 IF(CV(1)) 908,909,908
  908 IF(LFCW-100) 918,907,918
  918 AF=.01*FLOATF(LFCW)
      CPSIA=1.-2.*AF
      TP=CPSIA
      CALL CHECK(TP,PT)
      PSIA=PT
      SPSIA=SINF(PSIA)
 9091 IF(S-PSIA) 919,919,916
  919 GCP=1./(1.+AF)*(BV(12)*(1.-CX)+BV(4)* 2./BV(7)*(BV(14)-BV(15)*AQ))
      GCP=GCP*QS
      GAMAC=2./(1.+AF)*BV(8) *QS
      GO TO 910
  916 GC1=BV(12)*2.*AF/(1.+AF)
      GC2=BV(12)/(2.*(1.-AF*AF))*(CX-CPSIA+.5*(SPSIA*SPSIA-SX*SX))
      GC3=-BV(4)/(2.*(1.-AF*AF))*2./BV(7)*(BV(14)-BV(15)*AQ)*(1.+CX)
      GCP=GC1-GC2-GC3
      GCP=GCP*QS
      GAMAC=(1.+CX)/(1.-AF*AF)*BV(8)*QS
      GO TO 910
  907 GAMAC=CV(1)*BV(8)*QS
      GCP=(CV(1)*BV(12)+CV(9)*BV(4))*AQ+CV(1)*BV(4)/BV(7)*(BV(14)
     X     -BV(15)*AQ)
      GCP=GCP*QS
      GO TO 910
  909 GAMAC=0.
      GCP=0.
  910 GAMAR=(GAMAC+GAMAA+GAMAS)
      GT=GCP+GAP+GSP
      GO TO (7,8),MLT
    7 UHL(J)=GT*UH
      VHL(J)=GT*VH
      VBL(J)=VB*GAMAR
      UBL(J)=UB*GAMAR
      GO TO 90
    8 UHT(J)=GT*UH
      VHT(J)=GT*VH
      VBT(J)=-VB*GAMAR
      UBT(J)=-UB*GAMAR
      UHH(J)=-BV(12)*UH*SLM*QS
      VHH(J)=-BV(12)*VH*SLM*QS
   90 CONTINUE
      IF(MLT-1) 200,300,200
  300 IF(KL) 200,200,201
  201 SUHL=SIMPUN(PSIL,UHL,KL)*TL*(-1.)
      SVHL=SIMPUN(PSIL,VHL,KL)*TL*(-1.)
      SUBL=SIMPUN(PSIL,UBL,KL)*TL*(-1.)
      SVBL=SIMPUN(PSIL,VBL,KL)*TL*(-1.)
  200 CONTINUE
      GO TO(101,102),M
  101 MLT=2
      JE=JET
      M=2
      GO TO 99
  102 IF(KT) 202,202,203
  203 SUHH=SIMPUN(PSIT,UHH,KT)    +SUHH
      SVHH=SIMPUN(PSIT,VHH,KT)    +SVHH
      SUHT=SIMPUN(PSIT,UHT,KT)
      SVHT=SIMPUN(PSIT,VHT,KT)
      SUBT=SIMPUN(PSIT,UBT,KT)
      SVBT=SIMPUN(PSIT,VBT,KT)
  202 CONTINUE
      IF(MID-1) 103,103,104
  103 DSA (KS,N)=((SUHL+SUHT+SUHH)*SM+(SUBL+SUBT)*SW)
      DSAT(KS,N)=((SVHL+SVHT+SVHH)*SM+(SVBL+SVBT)*SW)
      GO TO 4103
  104 WT(KS)=     ((SUHL+SUHT+SUHH)*SM+(SUBL+SUBT)*SW)/12.5664
      QT(KS)=     ((SVHL+SVHT+SVHH)*SM+(SVBL+SVBT)*SW)/12.5664
 4103 IF(KR-NPT)711,2005,711
 2005 IF(KS-KSP)711,2004,711
 2004 PRINT 4102,XY(N)
 4102 FORMAT(78H INTERMEDIATE INFORMATION OF     UHH,VHH,UHL,UHT,VHL,VHT
     X,UBL,UBT,VBL,VBT AT R=F8.5)
      PRINT 2000,(UHH(JP),JP=1,KT)
      PRINT 2000,(VHH(JP),JP=1,KT)
      PRINT 2000,(UHL(JP),JP=1,KL)
      PRINT 2000,(UHT(JP),JP=1,KT)
      PRINT 2000,(VHL(JP),JP=1,KL)
      PRINT 2000,(VHT(JP),JP=1,KT)
      PRINT 2000,(UBL(JP),JP=1,KL)
      PRINT 2000,(UBT(JP),JP=1,KT)
      PRINT 2000,(VBL(JP),JP=1,KL)
      PRINT 2000,(VBT(JP),JP=1,KT)
  711 CONTINUE
 2000 FORMAT(9E13.5)
      RETURN
      END
```

```
      FOR
      SUBROUTINE MIDZON
C     CALCULATE MIDZON OF FIRST BLADE
C     A SUBROUTINE FOR XPLA
      DIMENSION DK(20),XL(20),B(9,9),CO(9),AH(10,9),CD(10,9),FAH(20,20),
     XDB(9,16),DC(9),HA(9),BP( 3,9),DE(9),BV(16),DWSH(9,20),EAH(20,18),
     X                XX(20,20),ZZ(20,18),TIT(12),CM(20,18),CMR(20,18),
     XCC(16,50),XY(50),YX(50),BB(16,50),SY(90),        SAG(50),
     1AGS(50),AB(9,9),DD(9,16),       DWSHT(9,20),            SAGT(50),
     XAGST(50),BQ(16  ),CV(16), VRE(20),  BPP(20),CQ(16),YS(90),
     XR(5,90),  H(25),T(25),SPR(20),A(25,90),NF(25),AS(25,90),AC(25,90),
     XSYS(90),SYC(90),UHH(90),VHH(90),UHL(90),UHT(90),VHL(90),VHT(90),
     XUBL(90),UBT(90),VBL(90),VBT(90),DSA(10,35),DSAT(10,35),
     X           WT(20),QT(20),Z(5,90),P(9),VP(90)
      DIMENSION PSIL(90),CPSIL(90),SPSIL(90),PSIT(90),SPSIT(90),
     XCPSIT(90),CPSIO(9,9),PSIO(9,9)
      DIMENSION C(8,9),FHA(20,20)
       COMMON DK,XL,B,CO,AH,CD,FAH,DB,DC,HA,BP,DE,BV,DWSH,EAH,XX,ZZ,TIT,
     1CM,CMR,CC,XY,YX,BP,SY,SAG,AGS,AB,DD,DWSHT,SAGT,AGST,BQ,CV,VRE,BPP,
     2CQ,YS,R,H,T,SPR,A,NF,AS,AC,SYS,SYC,UHH,VHH,UHL,UHT,VHL,VHT,
     3                                UBL,UBT,VBL,VBT,DSA,DSAT,WT,QT,Z,P,VP
      COMMON PSIL,CPSIL,SPSIL,PSIT,SPSIT,CPSIT,CPSIO,PSIO
      COMMON C,SW
      COMMON DFD,FDFD,DFPD,NL,RP,DY,LT,LH,LTH,LTH1,XH,PI,FP,S,NSIN,
     XGTT,KR,KS,SM,NKN,NPT,KSP,LFCW
      COMMON J1,J2,YL,YT,SL,ST,N,MID
      N=LTH1
      QT=0.
      WT=0.
      DO 811 K=1,16
      CQ(K)=CV(K)
      CV(K)=CC(K,LTH1)
      BQ(K)=BV(K)
  811 BV(K)=BB(K,LTH1)
 8111 KS=1
 4501 FP=BV(6)-DK(KS)*BV(7)
      YL=BV(6)-FP
      YT=FP+BV(7)-BV(6)
      R1=RP-DY
      R2=RP+DY
      M8=1
      J=2
  731 S=A(1,J)
      SY(J)=S
      CX=AC(1,J)
      SX=AS(1,J)
      SYS(J)=SX
      SYC(J)=CX
  733 PP=(BV(3)*S/3.1416)**2
      ZP=(RP*SX)**2+PP
      SQ1=SQRTF(ABSF(RP*RP+R1*R1-2.*RP*R1*CX+PP))
      SQ2=SQRTF(ABSF(RP*RP+R2*R2-2.*RP*R2*CX+PP))
      Z(4,J)=((R2-RP*CX)/SQ2-(R1-RP*CX)/SQ1)/ZP
      Z(1,J)= LOGF(ABSF((R2-RP*CX+SQ2)/(R1-RP*CX+SQ1)))-R2/SQ2+R1/SQ1
      Z(2,J)= (RP*(SX*SX-S*CX*SX)*(R2/SQ2-R1/SQ1)+(RP*RP*S*SX+(CX+S*SX)
     X*PP)*(1./SQ2-1./SQ1))/ZP
      Z(3,J)=BV(3)*CX*Z(4,J)+    (RP*BV(10)*Z(4,J)+(BV(10)*CX*((RP*RP+PP
     X)*(1./SQ2-1./SQ1)-RP*CX*(R2/SQ2-R1/SQ1)) /ZP))
      GO TO (735,736,750),M8
  735 J=J+1
      IF(A(1,J)-BV(7)) 731,732,732
  732 SY(J)=BV(7)
      SL1=YL
      SL2=YT
      IF(YL-YT)741,742,742
  742 SL1=YT
      SL2=YL
  741 J=2
 1741 IF(SY(J)-SL1)744,745,745
  744 DO 743 K=1,4
  743 R(K,J)=Z(K,J)
      Z(5,J)=SY(J)
      J=J+1
      GO TO 1741
  745 J1=J
      DO 1745 K=1,4
 1745 P(K)=Z(K,J1)
      M8=2
      Z(5,J1)=SL1
      S=SL1
      CX=COSF(S)
      SX=SINF(S)
      SYS(J1)=SX
      SYC(J1)=CX
      GO TO 733
  736 DO 746 K=1,4
      R(K,J1)=Z(K,J1)
  746 Z(K,J1)=P(K)
      IF(YL-YT)1748,1750,1748
 1748 J=J1+1
 7481 IF(SY(J)-SL2)748,749,749
  748 DO 747 K=1,4
  747 R(K,J)=Z(K,J)
      Z(5,J)=SY(J)
      J=J+1
      GO TO 7481
  749 J2=J
      DO 1749 K=1,4
 1749 P(K)=Z(K,J2)
      M8=3
      Z(5,J2)=SL2
      S=SL2
      CX=COSF(S)
      SX=SINF(S)
      SYS(J2)=SX
      SYC(J2)=CX
      GO TO 733
  750 DO 751 K=1,4
      R(K,J2)=Z(K,J2)
  751 Z(K,J2)=P(K)
 1750 J2=J
      SL=YL
      ST=YT
      DO 1 K=1,4
      DO 1 J=2,J2
      I=J-1
    1 R(K,I)=R(K,J)
      DO 2 J=2,J2
      I=J-1
      SY(I)=Z(5,J)
```

```
      SYS(I)=SYS(J)
      SYC(I)=SYC(J)
    2 Z(5,I)=Z(5,J)
      J1=J1-1
      J2=J2-1
      IF(NPT-KR) 4682,4683,4682
 4683 IF(KSP-KS) 4682,4681,4682
 4681 PRINT 4104,RP
 4104 FORMAT(19H MID ZONE PHI AT R=F5.4)
      PRINT 2000,(SY (JP),JP=1,J2)
 4682 CONTINUE
 2000 FORMAT(9E13.5)
C     CONVERT CHORDWISE STATIONS FROM PHI-COORD TO PSI-COORD
      CALL CONVRT
C     CHORDWISE INTEGRATION
      MID=2
      CALL KERNEL
      KS=KS+1
      IF(KS-NKN)4501,4501,450
  450 CONTINUE
      IF (NPT) 467,467,4671
 4671 PRINT 4693
 4693 FORMAT(29H INTEGRATED VA,VT IN MID ZONE)
      PRINT 2000,(WT(KS),KS=1,NKN)
      PRINT 2000,(QT(KS),KS=1,NKN)
  467 CONTINUE
      DO 8113 K=1,16
      CV(K)=CQ(K)
 8113 BV(K)=BQ(K)
      MID=1
      RETURN
      END
```

```
      FOR
      SUBROUTINE SUPCAV
C     A SUBROUTINE FOR TRANFORMING CAMBER RATIO FROM EQUIVALENT
C     AIRFOIL TO SUPERCAVITATING FOIL
      DIMENSION DK(20),XL(20),B(9,9),CO(9),AH(10,9),CD(10,9),FAH(20,20),
     XDB(9,16),DC(9),HA(9),BP( 3,9),DE(9),BV(16),DWSH(9,20),EAH(20,18),
     X                XX(20,20),ZZ(20,18),TIT(12),CM(20,18),CMR(20,18),
     XCC(16,50),XY(50),YX(50),BB(16,50),SY(90),        SAG(50),
     1AGS(50),AB(9,9),DD(9,16),        DWSHT(9,20),            SAGT(50),
     XAGST(50),BQ(16  ),CV(16), VRE(20),  BPP(20),CQ(16),YS(90),
     XR(5,90),  H(25),T(25),SPR(20),A(25,90),NF(25),AS(25,90),AC(25,90),
     XSYS(90),SYC(90),UHH(90),VHH(90),UHL(90),UHT(90),VHL(90),VHT(90),
     XUBL(90),UBT(90),VBL(90),VBT(90),DSA(10,35),DSAT(10,35),
     X           WT(20),QT(20),Z(5,90),P(9),VP(90)
      DIMENSION PSIL(90),CPSIL(90),SPSIL(90),PSIT(90),SPSIT(90),
     XCPSIT(90),CPSIO(9,9),PSIO(9,9)
      DIMENSION C(8,9),FHA(20,20)
       COMMON DK,XL,B,CO,AH,CD,FAH,DB,DC,HA,BP,DE,BV,DWSH,EAH,XX,ZZ,TIT,
     1CM,CMR,CC,XY,YX,BB,SY,SAG,AGS,AB,DD,DWSHT,SAGT,AGST,BQ,CV,VRE,BPP,
     2CQ,YS,R,H,T,SPR,A,NF,AS,AC,SYS,SYC,UHH,VHH,UHL,UHT,VHL,VHT,
     3                          UBL,UBT,VBL,VBT,DSA,DSAT,WT,QT,Z,P,VP
      COMMON PSIL,CPSIL,SPSIL,PSIT,SPSIT,CPSIT,CPSIO,PSIO
      COMMON C,SW
      COMMON DFD,FDFD,DFFD,NL,RP,DY,LT,LH,LTH,LTH1,XH,PI,FP,S,NSIN,
     XGTT,KR,KS,SM,NKN,NPT,KSP,LFCW
      COMMON J1,J2,YL,YT,SL,ST,N,MID,NSC,KRN,NCL
      ERASE CM,XX,ZZ
      NCL1=1+NCL
      DO 2 J=1,NCL
      XX(J,1)=XL(J)
      XX(J,11)=(XL(J))**.5
      DO 2 K=2,NCL1
      KK=K+10
      XX(J,K)=XX(J,K-1)*XX(J,1)
      XX(J,KK)=XX(J,KK-1)*XX(J,11)
    2 CONTINUE
      DO 3 K=1,KRN
      DO 3 J=1,NCL
      ZZ(J,K)=CMR(J,K)/C(4,K)
    3 CONTINUE
      CALL MATINV(XX,NCL,ZZ,KRN,V,ID)
      DO 4 K=1,KRN
      DO 4 J=1,NCL
      DO 4 I=1,NCL
      II=I+11
      X=2.*FLOATF(I)/(FLOATF(I)+1.)
      CM(J,K)=ZZ(I,K)*XX(J,II)*X+CM(J,K)
    4 CONTINUE
      PRINT 7
    7 FORMAT(55H0CAMBER RATIO FOR SUPERCAVITATING BLADE,(CM/LT)/A1
      DO 5 J=1,NCL
    5 PRINT 6,XL(J),(CM(J,K),K=1,KRN)
    6 FORMAT(F8.4,F16.4,8F12.4)
      RETURN
      END
```

REFERENCES

1. Pien, Pao C., "The Calculation of Marine Propellers Based on Lifting Surface Theory," Journal of Ship Research, Vol. 5, No. 2 (Sep 1961).

2. Cheng, Henry M., "Hydrodynamic Aspect of Propeller Design Based on Lifting Surface Theory; Part I, Uniform Chordwise Distribution," David Taylor Model Basin Report 1802 (Sep 1964).

3. Abbott, Ira H. and von Doenhoff, Albert E., "Theory of Wing Sections," Dover Publications Inc., New York (1959).

4. Johnson, Virgil E., Jr., "Theoretical Determination of Log-Drag Supercavitating Hydrofoils and Their Two-Dimensional Characteristics at Zero Cavitation Number," National Advisory Committee for Aeronautics RM L57G11a (Sep 1957).

END

9-7-65