CJCSM 6231.04A
29 February 2000

MANUAL FOR EMPLOYING JOINT TACTICAL COMMUNICATIONS

JOINT TRANSMISSION SYSTEMS

JOINT STAFF
WASHINGTON, D.C. 20318-0400

(INTENTIONALLY BLANK)

CHAIRMAN OF THE JOINT CHIEFS OF STAFF MANUAL

J-6 CJCSM 6231.04A
DISTRIBUTION: A, B, C, J 29 February 2000

MANUAL FOR EMPLOYING TACTICAL COMMUNICATIONS

REFERENCES: See Enclosure I.

1. Purpose. This manual provides information and guidance on planning, engineering, installing, and managing transmission systems which support joint exercises and contingency operations. The following major topics are addressed:

a. Tactical multiplex and modem equipment.

b. Extremely high frequency (EHF), superhigh frequency (SHF), and ultrahigh frequency (UHF) tactical satellite systems.

c. Tactical tropospheric scatter systems.

d. Tactical multichannel line-of-sight systems.

e. Transportable high frequency (HF) radio systems.

f. Tactical cable and alternative systems and equipment.

g. Tactical orderwire equipment.

h. Tactical system planning.

i. Joint transmission planning and worksheets.

2. Cancellation. CJCSM 6231.04, 29 December 1995, "Joint Transmission Systems," is canceled.

3. Applicability. This manual applies to:

a. The combatant command or Joint Task Force (JTF) J-6 directorate (or equivalent office) responsible for joint communications management in a deployed JTF.

b. Components and the assigned joint communications support organization in a JTF.

4. Summary of Changes. Information on the following was included:

a. AN/FCC-100 (V)7/(V)8 and (V)9/(V)9X.

b. Standardized tactical entry point (STEP).

c. Integrated Digital Network Exchange (IDNX) 90, 20/24, Micro-20.

d. SHF TRI-BAND Advanced Range Extension Terminal (STAR-T).

e. AN/TSC-152, Lightweight Multiband Satellite Terminal (LMST).

f. AN/PSC-11, Single Channel Antijam Man-Portable Terminal (SCAMP).

g. AN/TSC-154, Secure Mobile Antijam Reliable Tactical Terminal (SMART-T).

h. AN/PSC-5, Spitfire Terminal.

5. Releasability. This manual is approved for public release; distribution is unlimited. DOD components (to include the combatant commands), other Federal agencies, and the public may obtain copies of this manual through the Internet from the CJCS Directives Home Page--http://www.dtic.mil/doctrine/jel/cjcsd/cjcsm.htm. Copies are also available through the Government Printing Office on the Joint Electronic Library CD-ROM.

6. Effective Date. This manual is effective upon receipt.

For the Chairman of the Joint Chiefs of Staff:

C. W. FULFORD, JR
Lieutenant General, U.S. Marine Corps
Director, Joint Staff

ENCLOSURES

A -- Joint Transmission System Planning
B -- Tactical Multiplex Equipment
C -- AN/TRC-170(V) Digital Tropo Radio
D -- Tactical Satellite Systems
E -- Cable and Cable Alternative Systems and Equipment
F -- Introduction to Multichannel Line-of-Sight Systems
G -- High-Frequency Radio Systems
H -- Standardized Tactical Entry Point
I -- Reference and Supplemental Reading
J -- Compact Disk Distribution List
GL-- Glossary

LIST OF EFFECTIVE PAGES

The following is a list of effective pages for CJCSM 6231.04A. Use this list to verify the currency and completeness of the document. An "O" indicates a page in the original document.

PAGE	CHANGE	PAGE	CHANGE
1 thru 4	O	D-A-F-1 thru D-A-F-16	O
i thru xxiv	O	D-A-G-1 thru D-A-G-6	O
A-1 thru A-2	O	D-A-H-1 thru D-A-H-30	O
A-A-1 thru A-A-70	O	D-B-1 thru D-B-10	O
A-A-A-1 thru A-A-A-16	O	D-B-A-1 thru D-B-A-2	O
A-B-1 thru A-B-36	O	D-B-B-1 thru D-B-B-4	O
A-C-1 thru A-C-94	O	D-B-C-1 thru D-B-C-4	O
A-D-1 thru A-D-162	O	D-C-1 thru D-C-22	O
B-1 thru B-2	O	E-1 thru E-18	O
B-A-1 thru B-A-48	O	F-1 thru F-6	O
B-A-A-1 thru B-A-A-24	O	F-A-1 thru F-A-6	O
B-B-1 thru B-B-30	O	F-B-1 thru F-B-6	O
B-B-A-1 thru B-B-A-26	O	F-C-1 thru F-C-4	O
B-C-1 thru B-C-10	O	F-D-1 thru F-D-4	O
C-1 thru C-16	O	F-E-1 thru F-E-4	O
D-1 thru D-2	O	F-F-1 thru F-F-6	O
D-A-1 thru D-A-32	O	F-G-1 thru F-G-2	O
D-A-A-1 thru D-A-A-38	O	G-1 thru G-32	O
D-A-B-1 thru D-A-B-16	O	H-1 thru H-44	O
D-A-C-1 thru D-A-C-10	O	I-1 thru I-6	O
D-A-D-1 thru D-A-D-16	O	J-1 thru J-10	O
D-A-E-1 thru D-A-E-12	O	GL-1 thru GL-14	O

(INTENTIONALLY BLANK)

RECORD OF CHANGES

Change No.	Date of Change	Date Entered	Name of Person Entering Change

(INTENTIONALLY BLANK)

TABLE OF CONTENTS

ENCLOSURE PAGE

A JOINT TRANSMISSION SYSTEM PLANNING....A-1

Introduction....A-1

Appendix A--Backbone System Planning.... A-A-1
Annex A--Automated System Propagation Planning Tools.... A-A-A-1
Appendix B--Orderwire Systems.... A-B-1
Appendix C--System Timing.... A-C-1
Appendix D--Crew and Channel Assignment Sheets.... A-D-1

B TACTICAL MULTIPLEX EQUIPMENT....B-1

Introduction....B-1

Appendix A--TRI-TAC Digital Group Multiplex Equipment.... B-A-1
Annex A--Multiplexing and Multiplex Signal Formats....B-A-A-1
Appendix B--Other Tactical Multiplex And Modem Equipment.... B-B-1
Annex A--Integrated Digital Network Exchange (IDNX) General Overview....B-B-A-1
Appendix C--AN/TSQ-146(V) Multiplexer Terminal and Mini-MUX.... B-C-1

C AN/TRC-170(V) DIGITAL TROPO RADIO....C-1

AN/TRC-170(V) Radio Terminal Sets....C-1
Functional Description....C-1
AN/TRC-170(V) Antenna Systems....C-5
Modes of Operation....C-9
AN/TRC-170(V) Frequency Assignment Considerations....C-9
AN/TRC-170(V) Orderwires....C-10
AN/TRC-170(V) Alarm Monitor....C-11
AN/TRC-170(V) Network Timing....C-11

AN/TRC-170(V) Physical Interfaces C-12
AN/TRC-170(V) Baseband Configuration C-12
AN/TRC-170(V) Link Engineering C-14
Employment of the AN/TRC-170(V) C-15

D TACTICAL SATELLITE SYSTEMS D-1

Introduction D-1

Appendix A--SHF Satellite Systems D-A-1
Annex A--TD-1389 Low-Rate Multiplexer and TD-1337 Digital Multiplexer D-A-A-1
Annex B--AN/TSC-93B(V) Satellite Terminals D-A-B-1
Annex C--AN/TSC-94A Satellite Terminal D-A-C-1
Annex D--AN/TSC-85B(V) Satellite Terminals D-A-D-1
Annex E--AN/TSC-100A Satellite Terminal D-A-E-1
Annex F--GMF Satellite AJCM D-A-F-1
Annex G--AN/TSC-156 (V) 3/4/5 SHF Tri-Band Advanced-Range Extension Terminal (STAR-T) D-A-G-1
Annex H--AN/TSC-152 Lightweight Multiband Satellite Terminal D-A-H-1
Appendix B--Milstar System Description D-B-1
Annex A--Air Force Milstar Terminals D-B-A-1
Annex B--Navy Milstar EHF Terminals D-B-B-1
Annex C Army Milstar Terminals D-B-C-1
Appendix C--UHF Satellite Systems D-C-1

E CABLE AND CABLE ALTERNATIVE SYSTEMS AND EQUIPMENT E-1

Introduction E-1
Field Wire and Cable Systems E-1
Fiber Optic Cable and Systems E-3
AN/GSC-54, Fiber Optic Cable System E-4
AN/TAC-1, Fiber Optic Interface Unit E-5
RT-1462/TRC-170 Tropo-Satellite Support Radio E-7
AN/GRC-239, TSSR E-16

F INTRODUCTION TO MULTICHANNEL LINE-OF-SIGHT SYSTEMS F-1

Introduction..... F-1
EAC LOS Network Configurations F-1
Marine Corps LOS Employment F-3
Army ECB LOS Employment F-4

Appendix A--AN/TRC-138A/B Radio Repeater Set.....F-A-1
Appendix B--AN/TRC-173 Radio Terminal Set..... F-B-1
Appendix C--AN/TRC-174 Radio Repeater Set..... F-C-1
Appendix D--AN/TRC-175 Radio Terminal Set F-D-1
Appendix E--AN/MRC-142 Line-of-Sight Radio Subsystem F-E-1
Appendix F--MSE Radios and Assemblages F-F-1
Appendix G--DCS-Tactical LOS Transmission ..... Interface F-G-1

G HIGH FREQUENCY RADIO SYSTEMS G-1

General..... G-1
AN/TRQ-35(V) Ionospheric Sounder..... G-1
AN/TSC-60(V)2 and (V)3 HF Communications Central G-4
AN/TSC-60(V)5 Communications Central..... G-4
OZ-11A/TSC-60(V) Radio Set Group G-10
AN/TSC-60(V)9 Communications Central.....G-10
AN/TSC-120 Communications Central.....G-10
AN/TSC-122 Communications Central.....G-18
AN/TSC-95 HF Communications System G-21
AN/TSC-118 HF Communicaitons System G-22
Automatic Link Establishment Tutorial.....G-25
DCS HF Gateway Entry.....G-30

H STANDARDIZED TACTICAL ENTRY POINT (STEP)..... H-1

Introduction..... H-1
STEP Sites H-3
STEP Equipment Description and Operation H-6
Expected STEP Upgrades H-14
Non-STEP Equipment Related Programs H-24
Tactical Configurations Supported H-27

DISN Network Connections Provided by STEP..... H-28
Access To STEP and Services..... H-36
STEP Card Information H-39
Joint Voice and Data Network Host Sites..... H-42

I REFERENCES AND SUPPLEMENTAL READING..... I-1

J COMPACT DISK DISTRIBUTION LIST J-1

GLOSSARY GL-1

FIGURE

A-A-1 Planning Example--Backbone Transmission System Diagram..... A-A-3
A-A-2 Transmission System or Link Summary Sheet..... A-A-4
A-A-3 Circuit Summary Sheet-Link TAJ01036 ..... A-A-6
A-A-4 Circuit Summary Sheet-Link SAU01018..... A-A-7
A-A-5 Circuit Summary Sheet-Link SA101009 ..... A-A-8
A-A-6 AFSOF Nodal Schematic..... A-A-9
A-A-7 ARSOF Nodal Schematic A-A-10
A-A-8 JTF Nodal Schematic..... A-A-11
A-A-9 Equipment Reconfiguration Example Network A-A-13
A-A-10 Example of a Symmetrical Network A-A-15
A-A-11 Example of a Nonsymmetrical Network..... A-A-17
A-A-12 Example TGM Configuration That Does Not Create Secondary Traffic Channel..... A-A-19
A-A-13 Example TGM Configuration That Creates Secondary Traffic Channel A-A-20
A-A-14 Two RLGMs into a TGM..... A-A-26
A-A-15 Four RLGMs into a TGM..... A-A-26
A-A-16 Example Network A-A-28
A-A-17 Circuit Switch Trunk and Digital Loop Group Network..... A-A-29
A-A-18 LGM 3 Crew Assignment Sheet..... A-A-31
A-A-19 LGM 4 Crew Assignment Sheet..... A-A-32
A-A-20 TGM 2 Crew Assignment Sheet..... A-A-33
A-A-21 TGM 2 Channel Assignment Sheet A-A-34
A-A-22 LGM 1 Crew Assignment Sheet..... A-A-36
A-A-23 LGM 2 Crew Assignment Sheet..... A-A-37
A-A-24 TGM 1 Crew Assignment Sheet..... A-A-38

A-A-25 TGM 1 Channel Assignment Sheet A-A-39
A-A-26 Node A AN/TTC-39A(V) Channel Assignment Sheet A-A-41
A-A-27 Node A CNCE Crew Assignment Sheet.....A-A-43
A-A-28 Node A CNCE Channel Assignment Sheet A-A-45
A-A-29 LGM 5 Crew Assignment Sheet A-A-51
A-A-30 LGM 6 Crew Assignment Sheet A-A-52
A-A-31 LGM 7 Crew Assignment Sheet A-A-54
A-A-32 RLGM 1 Crew Assignment Sheet A-A-55
A-A-33 RMC 1 Crew Assignment Sheet A-A-57
A-A-34 RMC 1 Channel Assignment Sheet A-A-58
A-A-35 TGM 3 Crew Assignment Sheet A-A-59
A-A-36 TGM 3 Channel Assignment Sheet A-A-61
A-A-37 Node B AN/TTC-39A(V) Channel Assignment Sheet A-A-63
A-A-38 Node B CNCE Crew Assignment Sheet A-A-66
A-A-39 Node B CNCE Channel Assignment Sheet A-A-67

A-A-A-1 Example TIREM Output Results for User-Entered Profile Sample Run A-A-A-4

A-B-1 Multiplexer Terminal Telemetry Operation (EOL Mode)..... A-B-16
A-B-2 Multiplexer Terminal Telemetry Operation (Thru Mode) A-B-18
A-B-3 CNCE Processing of CESE Telemetry..... A-B-20
A-B-4 Digital Bridge Connection in the AN/TRC-170..... A-B-25
A-B-5 AN/TRC-170 CESE Operation..... A-B-28
A-B-6 GMF CESE Operation A-B-30

A-C-1 TED Timing Flow A-C-4
A-C-2 TD-1235 LGM Timing Flow, Loopback Mode..... A-C-6
A-C-3 TD-1235 LGM Timing Flow, Station Clock Mode A-C-7
A-C-4 TD-1236 TGM Timing Flow, Loopback Mode..... A-C-8
A-C-5 TD-1236 TGM Timing Flow, Station Clock Mode A-C-10
A-C-6 TD-1234 RMC Timing Flow, Loopback Mode A-C-12
A-C-7 TD-1233 RLGM Timing Flow A-C-13
A-C-8 MD-1026 Timing Flow..... A-C-15

A-C-9 MD-1023 LSCDM/MD-1024 HSCDM Timing Flow A-C-16
A-C-10 C-10716 OCU-I, C-10717 OCU-II, Group Timing Distribution Group Timing Source A-C-17
A-C-11 C-10716 OCU-I, C-10717 OCU-II, Group Timing Distribution, DVOW Clock Source A-C-19
A-C-12 C-10716 OCU-I, C-10717 OCU-II, Group Timing Distribution, Internal Master Clock A-C-20
A-C-13 TD-1237 MGM Timing Flow A-C-22
A-C-14 AN/TSQ-146(V) Timing Subsystem (Digital Clock Pulse Generator) A-C-23
A-C-15 AN/TSQ-146 Master Timing Mode A-C-27
A-C-16 AN/TSQ-146 Slave Timing--Equal Rate DTGs A-C-29
A-C-17 AN/TSQ-146 Slave Timing--Unequal Rate DTGs A-C-30
A-C-18 AN/TSQ-146 Timing with Autophase Function A-C-32
A-C-19 Typical LGM or TGM Supergroup Configuration (Slave Mode) Without Master Timing Source A-C-33
A-C-20 Typical LGM or TGM Supergroup Configuration (Master Mode) A-C-35
A-C-21 OCU-I Application Providing Timing for Two Equal TGM Groups A-C-36
A-C-22 AN/TSQ-111 CNCE Timing Subsystem (Simplified) A-C-37
A-C-23 CNCE Timing Flow, Atomic Standard Reference Source A-C-39
A-C-24 CNCE Timing Flow, Group Input Reference Source A-C-40
A-C-25 AN/TTC-39 Series CS Timing Flow, Master Timing Mode A-C-42
A-C-26 AN/TTC-39 Series CS Timing Flow, Slave Timing Mode A-C-43
A-C-27 AN/TTC-42 CS Timing Flow, Master Timing Mode A-C-45
A-C-28 AN/TTC-42 CS Timing Flow, Slave Timing Mode A-C-47
A-C-29 SB-3865 Switchboard Timing Flow, Master Timing Mode A-C-48
A-C-30 SB-3865 Switchboard Timing Flow, Slave Timing Mode A-C-50
A-C-31 AN/TRC-170 Group Timing A-C-51
A-C-32 AN/TRC-170 Group Timing with TGM A-C-52

A-C-33 AN/TRC-170 Master Station Timing A-C-54
A-C-34 AN/TRC-170 Mission Timing A-C-56
A-C-35 TD-1337(V)l/(V)3 Timing Flow--External Timing Mode A-C-58
A-C-36 TD-1337(V)2/(V)4 Timing Flow--Slave Timing Mode A-C-59
A-C-37 TD-1337(V)1/(V)3 Timing Flow--Master Timing Mode A-C-60
A-C-38 AN/TRC-175 Timing Flow A-C-62
A-C-39 AN/TRC-138A Timing Flow A-C-64
A-C-40 AN/TRC-174 Timing Flow A-C-65
A-C-41 AN/TRC-173 Timing Flow A-C-67
A-C-42 Nodal Timing Plan Worksheet A-C-70
A-C-43 Network Timing Plan Example A-C-76
A-C-44 CNCE-TROPO-CNCE Link Timing Flow A-C-77
A-C-45 AN/TTC-39A-Radio Assemblage-RMC Link Timing Flow A-C-79
A-C-46 CNCE-GMF-AN/TTC-39A Link Timing Flow A-C-80
A-C-47 Nodal Timing Plan Worksheet--Node #1 ..... A-C-82
A-C-48 Nodal Timing Plan Worksheet--Node #2 ..... A-C-84
A-C-49 Nodal Timing Plan Worksheet--Node #3 ..... A-C-85
A-C-50 Nodal Timing Plan Worksheet--Node #4 ..... A-C-86
A-C-51 Nodal Timing Plan Worksheet--Node #5 ..... A-C-87
A-C-52 Nodal Timing Plan Worksheet--Node #6 ..... A-C-89
A-C-53 Nodal Timing Plan Worksheet--Node #7 ..... A-C-90
A-C-54 Nodal Timing Plan Worksheet--Node #8 ..... A-C-91
A-C-55 Nodal Timing Plan Worksheet--Node #9 ..... A-C-92

A-D-1 Transmission System and Link Summary Sheet A-D-9
A-D-2 System Link Designator Format A-D-10
A-D-3 Circuit Summary Sheet A-D-13
A-D-4 Standard Tactical CCSD Format A-D-15
A-D-5 TD-1233, RLGM Crew Assignment Sheet A-D-25
A-D-6 TD-1234, RMC Crew Assignment Sheet A-D-28
A-D-7 TD-1235, LGM Crew Assignment Sheet A-D-30
A-D-8 TD-1236, TGM Crew Assignment Sheet A-D-34
A-D-9 TD-1237, MGM Crew Assignment Sheet A-D-36
A-D-10 MD-1026, GM Crew Assignment Sheet A-D-38
A-D-11 Cable Driver Crew Assignment Sheet A-D-40
A-D-12 C-10716, OCU-I Crew Assignment Sheet A-D-43

A-D-13 C-10717, OCU-II Crew Assignment Sheet A-D-49
A-D-14 AN/TRC-170, Crew Assignment Sheet A-D-57
A-D-15 Channel Assignment Sheet A-D-65
A-D-16 AN/TSQ-146(V) Multiplexer Terminal Crew Assignment Sheet A-D-67
A-D-17 AN/TSQ-146(V) Multiplexer Terminal, Orderwire Connections A-D-69
A-D-18 AN/TSQ-146(V) DCPG Crew Assignment Sheet A-D-74
A-D-19 AN/TSQ-111( )(V) Crew Assignment Sheet A-D-76
A-D-20 AN/TSQ-111( )(V) CNCE Channel Assignment Sheet A-D-80
A-D-21 AN/TSQ-111( )(V) CNCE GM Crew Assignment Sheet A-D-83
A-D-22 AN/TSQ-111( )(V) CNCE LSCDM Crew Assignment Sheet A-D-86
A-D-23 AN/TSQ-111( )(V) CNCE, Orderwire Connections A-D-87
A-D-24 GMF Phase II Satellite Terminal Crew Assignment Sheet A-D-92
A-D-25 TD-1337(V)/G TSSP, Crew Assignment Sheet A-D-96
A-D-26 TD-1337(V)/G TSSP RMUX Configuration for Downloading Crew Assignment Sheet A-D-101
A-D-27 TD-1389 LRM Crew Assignment Sheet A-D-104
A-D-28 AJ Control Modem Crew Assignment Sheet A-D-113
A-D-29 RT-1462U/TRC-170 TSSR Crew Assignment Sheet... A-D-118
A-D-30 AN/TRC-138A/B Crew Assignment Sheet A-D-128
A-D-31 AN/TRC-173 Crew Assignment Sheet A-D-130
A-D-32 AN/TRC-174 Crew Assignment Sheet A-D-132
A-D-33 AN/TRC-175A/B Crew Assignment Sheet A-D-134
A-D-34 AN/FCC-100(V)6/LDRM Crew Assignment Sheet A-D-136
A-D-35 Communications Modem Crew Assignment Sheet A-D-142
A-D-36 CV-4180 LTU Crew Assignment Sheet A-D-145
A-D-37 VOCU, C-11955 Crew Assignment Sheet A-D-147
A-D-38 UHF Satellite Crew Assignment Sheet A-D-151
A-D-39 AN/TRC-173 Terminal Configuration CAS A-D-152
A-D-40 AN/TRC-174 Terminal Configuration CAS A-D-153
A-D-41 AN/TRC-138A Terminal Configuration CAS A-D-154
A-D-42 AN/TRC-175 Terminal Configuration CAS A-D-155
A-D-43 AN/TRC-170 Terminal Configuration CAS A-D-156
A-D-44 AN/TSC-85B Terminal Configuration CAS A-D-157
A-D-45 AN/TSC-93B Terminal Configuration CAS A-D-158

B-A-1 Digital Group Multiplex (DGM) Equipment B-A-2
B-A-2 Use of AAU Card for Point-to-Point Analog Telephone ... B-A-7
B-A-3 Use of AAU Card With an Analog Telephone Loop B-A-8
B-A-4 Use of AAU Card With an FSK Modem..... B-A-9
B-A-5 TD-1233, Remote Loop Group Multiplexer (RLGM) B-A-11
B-A-6 Interfacing the TD-1233 RLGM to an AN/TTC-39( ) CS..... B-A-13
B-A-7 TD-1234, Remote Multiplexer Combiner (RMC) B-A-14
B-A-8 RMC With Seven Local Channels..... B-A-17
B-A-9 RMC With Eight Local Channels B-A-17
B-A-10 Four RLGM Channels Into an RMC With Three Local Channels..... B-A-18
B-A-11 Four RLGM Channels Into an RMC With Four Local Channels B-A-18
B-A-12 Seven RMC Channels Into an RMC With Eight Local Channels B-A-19
B-A-13 Eight RMC Channels Into an RMC With Eight Local Channels B-A-19
B-A-14 Four RLGM Channels Into an RMC With Three Channels Into Another RMC With Eight Channels B-A-20
B-A-15 Four RLGM Channels Into an RMC With Four Channels Into Another RMC With Eight Channels B-A-20
B-A-16 TD-1235, Loop Group Multiplexer B-A-21
B-A-17 TD-1236, Trunk Group Multiplexer (TGM)..... B-A-24
B-A-18 MD-1026, Group Modem, (GM) (Diphase Interface) B-A-31
B-A-19 MD-1026, Group Modem, (GM) (Dipulse Interface)..... B-A-32
B-A-20 MD-1023, Low-Speed Cable Driver Modem (LSCDM) B-A-34
B-A-21 TD-1218, Low-Speed Pulse Restorer (LSPR)..... B-A-36
B-A-22 Low-Speed Cable System B-A-37
B-A-23 TD-1237, Mastergroup Multiplexer (MGM) B-A-40
B-A-24 High-Speed Cable Driver Modem Frame Formats B-A-41
B-A-25 MD-1024, High-Speed Cable Driver Modem (HSCDM)..... B-A-42
B-A-26 TD-1219, High-Speed Pulse Restorer (HSPR) B-A-44
B-A-27 High-Speed Cable System (HSCDM and HSPR)..... B-A-45

B-A-28 MD-1025, Remote Loop Group Multiplexer/Cable Driver (RLGM/CD) B-A-47

B-A-A-1 DTG MSF Organization, Four Minor Frames B-A-A-6
B-A-A-2 DTG MSF Organization, Eight Minor Frames B-A-A-7
B-A-A-3 Overhead Time Slot Assignments, Four Minor Frames B-A-A-8
B-A-A-4 Overhead Time Slot Assignments, Eight Minor Frames B-A-A-9
B-A-A-5 AN/TTC-39 CS Overhead Time Slot to Subchannel Assignment B-A-A-11
B-A-A-6 Type 1 MSF Without Signaling Subchannel B-A-A-14
B-A-A-7 Type 1 MSF With Signaling Subchannel B-A-A-15
B-A-A-8 Type 1 MSF With Signaling Subchannel for AN/TTC-39 Series CS B-A-A-17
B-A-A-9 Type 1 MSF Without Signaling Subchannel for AN/TTC-39 Series CS B-A-A-18
B-A-A-10 Secondary Signaling and Traffic Channel Example B-A-A-20
B-A-A-11 Typical Group Reassignment Between DTGs B-A-A-23

B-B-1 Independent Transmit and Receive Timing B-B-6
B-B-2 Aux Clock Connection B-B-6
B-B-3 Looped Aggregate Timing B-B-7
B-B-4 LTU Channelization Diagram (Standard and PSHTI) B-B-22
B-B-5 Detailed Diagram of PSHTI in LTU B-B-24
B-B-6 Communications Modem Block Diagram B-B-27

B-B-A-1 Sample IDNX Node Interfaces B-B-A-2
B-B-A-2 IL96 IDNX Connectivity B-B-A-4
B-B-A-3 IL96 IDNX-90 ..... B-B-A-5
B-B-A-4 IL96 IDNX-20/-24 ..... B-B-A-6
B-B-A-5 Switch Fabric VTC B-B-A-8
B-B-A-6 NMS 5000 ..... B-B-A-10
B-B-A-7 IDNX Feature Card B-B-A-11
B-B-A-8 Typical DTE/DCE Interface B-B-A-11
B-B-A-9 LWX Module Applications B-B-A-21

B-C-1 AN/TSQ-146(V)l and (V)2 Functional Diagram B-C-2

B-C-2 AN/TSQ-146(V)3 Functional Diagram B-C-3
B-C-3 AN/TSQ-146 Tandem Relay Configuration B-C-8
B-C-4 Functional Block Diagram of Mini-MUX B-C-10

C-1 Functional Block Diagram of the AN/TRC-170(V) C-2
C-2 LGM/TRC-170(V) Interfaces C-6
C-3 Radiation Hazard Zone for (V)3 Antenna C-7
C-4 Radiation Hazard Zone for (V)2 Antenna C-8
C-5 AN/TRC-170(V) Baseband Configuration C-13

D-A-1 Point-to-Point Operation D-A-3
D-A-2 Nodal-Nonnodal Operation Using a Single Carrier From a Nodal Terminal D-A-4
D-A-3 Mesh Operation D-A-6
D-A-4 Hybrid Mesh/Nodal Configuration D-A-7
D-A-5 AN/TSC-100A Multicarrier Configuration D-A-8
D-A-6 Single Channel(s) Through the AN/TSC-85B/93B/94A/100A D-A-10
D-A-7 Conditioned Diphase Group Through a TSSP in an AN/TSC-93B or AN/TSC-94A D-A-11
D-A-8 Digital Group Through an AN/TSC-85B and AN/TSC-100A D-A-14
D-A-9 Conditioned Diphase Group Through an LRM and TSSP D-A-16
D-A-10 LST-8000(V)4-6 Terminal Function Block Diagram D-A-22
D-A-11 DSN Interface D-A-31

D-A-A-1 CVSD Line Card Level Settings D-A-A-3
D-A-A-2 LRM Modes of Operation D-A-A-9
D-A-A-3 LRM Configuration Road Map D-A-A-13
D-A-A-4 TD-1337(V)3 AN/TSC-100A Interfaces D-A-A-23
D-A-A-5 TD-1337(V)4 AN/TSC-94A Interfaces D-A-A-24
D-A-A-6 TD-1337(V)1 AN/TSC-85B Interfaces D-A-A-25
D-A-A-7 TD-1337(V)2 AN/TSC-93B Interfaces D-A-A-26
D-A-A-8 TD-1337 Nonnodal Point-to-Point Connectivity D-A-A-30
D-A-A-9 TD-1337 Nodal/Nonnodal Connectivity D-A-A-31
D-A-A-10 TD-1337 Mesh Connectivity D-A-A-33
D-A-A-11 Communications Using the TD-1337 ..... D-A-A-35

D-A-B-1 AN/TSC-93B(V)1 Functional Block Diagram D-A-B-4

D-A-C-1 AN/TSC-94A Functional Block Diagram D-A-C-2
D-A-C-2 AN/TSC-94A Baseband Configuration D-A-C-9

D-A-D-1 AN/TSC-85B(V)l Functional Block Diagram D-A-D-4

D-A-E-1 AN/TSC-100A Functional Block Diagram D-A-E-3
D-A-E-2 AN/TSC-100A Baseband Configuration D-A-E-9

D-A-F-1 Spread Spectrum Modulation Block Diagram D-A-F-3
D-A-F-2 NNT AJCM System D-A-F-4
D-A-F-3 NT AJCM System D-A-F-5
D-A-F-4 MD-1131 Control Modem Functional Block Diagram D-A-F-7
D-A-F-5 MD-1132 COMM Unit Functional Block Diagram D-A-F-9

D-A-G-1 AN/TSC-156(V)3/4/5 Palletized System Transport Vehicle D-A-G-2
D-A-G-2 AN/TSC-156(V)3/4/5 Palletized Mobile Power Unit (MPU) Transport Vehicle D-A-G-2
D-A-G-3 AN/TSC-156(V)5 HS Layout D-A-G-4

D-A-H-1 Typical LMST System Network Configuration Diagram D-A-H-1
D-A-H-2 AN/TSC-152 Simplified Block Diagram D-A-H-3
D-A-H-3 CMX Functional Block Diagram D-A-H-5
D-A-H-4 SMX Functional Block Diagram D-A-H-11
D-A-H-5 Group Modem Strapping Circuit Operation D-A-H-12
D-A-H-6 LMST Baseband Group Block Diagram D-A-H-21
D-A-H-7 LMST Transmitter Group Block Diagram D-A-H-24
D-A-H-8 LMST Receive Group Block Diagram D-A-H-26
D-A-H-9 LMST Antenna Control Unit Block Diagram D-A-H-29

D-B-1 Milstar Satellite System Block Diagram D-B-4
D-B-2 Milstar Terminal Function Block Diagram D-B-6

D-C-1 UHF Satellite Network D-C-2
D-C-2 AN/PSC-3 Functional Block Diagram D-C-8
D-C-3 Spitfire With SATCOM and LOS Antenna D-C-17

E-1 TSSR Configuration With Transmitter and Receiver RF Modules Remoted....E-9
E-2 TSSR Transmitter Block Diagram....E-11
E-3 TSSR Receiver Block Diagram....E-12
E-4 Typical TSSR Conditioned Diphase Configuration....E-14
E-5 TSSR to AN/TAC-1 Configuration....E-15

F-1 Army EAC LOS Systems....F-2
F-2 Representative AN/MRC-142 System Configuration, ULCS to ULCS Connection....F-5
F-3 Employment of MSE LOS Radio Terminal Assemblages....F-6

F-A-1 AN/TRC-138A Functional Block Diagram....F-A-2
F-A-2 AN/TRC-138A Example Configuration (TOH)....F-A-6

F-B-1 AN/TRC-173 Functional Block Diagram....F-B-2

F-C-1 AN/TRC-174 Functional Block Diagram....F-C-3
F-C-2 AN/TRC-174 Example Configuration....F-C-4

F-D-1 AN/TRC-175 Functional Block Diagram....F-D-2
F-D-2 AN/TRC-175 Example Configuration....F-D-4

F-G-1 DCS-Tactical Transmission Interface Block Diagram....F-G-2

G-1 HF Radio Link Network....G-2
G-2 AN/TSC-60(V)5 Simplified Block Diagram....G-8
G-3 OZ-11A/TSC-60(V) Radio Set Control Group....G-11
G-4 AN/TSC-60(V)9 Communications Central, Simplified Block Diagram....G-13
G-5 Message Traffic Flow, AN/TSC-95 Communications System....G-23

H-1 Notional Joint Task Force....H-3
H-2 Worldwide STEP Locations....H-4
H-3 Single STEP Site Typical Configuration....H-7
H-4 Navy s Initial Operational Capability Configuration....H-9

H-5 IDNX STEP Multiplexer Interfaces H-15
H-6 MIDAS Navy TIMEPLEX Interface H-16
H-7 MIDAS SMU Interface..... H-17
H-8 MIDAS ATM H-18
H-9 STEP Universal Modem System Interface..... H-20
H-10 Teleport Functions H-23
H-11 Programs Related to STEP H-25
H-12 DISN Deployed Mission Support Profile H-26
H-13 Satellite/Entry Point/Service Access Process..... H-37

TABLE

A-A-1 Channel Sequence at AN/TTC-39 Series Circuit Switches A-A-18
A-A-2 Bit Sequence, LGM, RMC, and RLGM 512 Kbps Family Rates..... A-A-23
A-A-3 Bit Sequence, LGM, RMC, and RLGM 576 Kbps Family Rates..... A-A-24
A-A-4 TGM Supergroup Bit Stream Sample Sequence--No Direct RLGM Inputs A-A-25
A-A-5 TGM Supergroup Bit Stream Channel Sequence--Direct RLGM Inputs A-A-25

A-B-1 DOW Telemetry Alarms by Assemblage.....A-B-5
A-B-2 Example of DOW Telemetry Messages.....A-B-6
A-B-3 OCU-III DVOW Settings.....A-B-14
A-B-4 CNCE Teletypewriter Rates and Protocol.....A-B-21
A-B-5 Orderwire Equipment Distribution by Assemblage A-B-32
A-B-6 Alphabetic Codes by Terminal Type A-B-34

A-C-1 OCU-I and OCU-II Group 1 Rates.....A-C-18
A-C-2 OCU-I and OCU-II Group 2 Rates.....A-C-18
A-C-3 DCPG Rate Synthesizer Rates.....A-C-24
A-C-4 TRI-TAC/GMF Equipment Buffering Capabilities.....A-C-71
A-C-5 Initial Timing Source Accuracy A-C-71
A-C-6 Equipment Timing Considerations.....A-C-74

A-D-1 Equipment and Crew Assignment Sheet Planning Guide A-D-5

A-D-2 Index of Crew and Channel Assignment Sheets and Codes A-D-6
A-D-3 CCSD User Codes A-D-11
A-D-4 System Link Designators..... A-D-12
A-D-5 CCSD Agency Codes A-D-16
A-D-6 CCSD Purpose and Use Codes A-D-18
A-D-7 CCSD Type of Service Codes A-D-23
A-D-8 DISA Block Number Assignments for Tactical Interface Circuits to Deployed CINCs..... A-D-24
A-D-9 End Item Baseband Equipment..... A-D-31
A-D-10 Time Slot Position of Traffic Channel One in an LGM..... A-D-32
A-D-11 Valid Equipment Identifiers for the CNCE Crew Assignment Sheet A-D-78
A-D-12 CTID Code Identification A-D-81
A-D-13 Special CTID Code Identification A-D-82
A-D-14 Group Modem Number versus CCA Number A-D-84
A-D-15 Valid CESE Equipment Identifiers..... A-D-90
A-D-16 LRM and GM Composite and Demultiplex Rates..... A-D-107
A-D-17 AN/GSC-24 Mode Composite Rates (Kbps) A-D-108
A-D-18 LRM Rate Pass System Mode Data Rates..... A-D-109
A-D-19 Digital and FSK Line Card Data Rates..... A-D-111
A-D-20 FSK Mark/Space Frequencies (Hz) A-D-112
A-D-21 Example Beacon Code Book Page..... A-D-116
A-D-22 Synthesizer Setting Table A-D-121
A-D-23 Required Attenuations for Various Inputs A-D-127

B-A-1 TRI-TAC DGM Family..... B-A-3
B-A-2 AAU Card Level Selection B-A-5
B-A-3 Number of Acceptable CVSD Conversions at a 32 Kbps Voice Digitization Rate..... B-A-6
B-A-4 RMC Interconnections..... B-A-12
B-A-5 LGM Channels and Composite Rates..... B-A-16
B-A-6 LGM Group Output Channel Sequence B-A-22
B-A-7 TGM Operation, 512-Kbps Rate Family, 32-Kbps Channel Rate B-A-26
B-A-8 TGM Operation, 576 Kbps Rate Family, 32 Kbps Channel Rate B-A-27
B-A-9 TGM/RLGM Operation..... B-A-28
B-A-10 TGM Supergroup Output Channel Sequence..... B-A-28
B-A-11 Supergroup-to-Group Ratio for Various MSFs B-A-29

B-A-12 MGM Switch Settings versus Group Rates B-A-39

B-A-A-1 Basic DTG System Frame Parameters B-A-A-4
B-A-A-2 Digital Transmission Group Data Rates B-A-A-5
B-A-A-3 Multiplex Signal Format Channel Application B-A-A-12

B-B-1 AN/FCC-100(V)5 and (V)6 Card Complement B-B-1
B-B-2 System (Conditioned Diphase Aggregate) Rate Options B-B-7
B-B-3 Aggregate Module Interface Parameters B-B-8
B-B-4 LDRM Work Sheet B-B-13
B-B-5 LDRM Data Rates B-B-14
B-B-6 PSHTI Trunk Interface Definitions B-B-20
B-B-7 Capabilities of the DLTUs in an LTU B-B-21
B-B-8 PSHTI Wiring to DB-37 Pin Connector B-B-25
B-B-9 MD-1270 Functional Configuration by Assemblages B-B-28

B-B-A-1 IDNX Data Module Reference Chart B-B-A-12
B-B-A-2 IDNX Voice Module and Server Reference Chart B-B-A-14
B-B-A-3 LBO Header Options B-B-A-15
B-B-A-4 Personality Modules B-B-A-16
B-B-A-5 JCSE Common IDNX Trunk Modules B-B-A-19
B-B-A-6 IDNX Trunk Module Reference Chart B-B-A-20

B-C-1 AN/TSQ-146(V) Multiplexer Equipment Complement B-C-4

C-1 AN/TRC-170(V) Characteristics C-3
C-2 Mission (Trunk) vs. Transmission Data Rates C-4
C-3 AN/TRC-170 Antenna Characteristics C-9

D-A-1 GMF Terminal Baseband Equipment D-A-2
D-A-2 Number of Individual Channels Supported by GMF SATCOM Terminals D-A-12
D-A-3 Conditioned Diphase Group Through Nonnodal Terminals D-A-12
D-A-4 Digital Group Configuration Through Nodal Terminals D-A-15
D-A-5 AS-3399/WSC Antenna Technical Specifications D-A-18

D-A-6 Typical QUICKSAT Second Level AN/FCC-100 Channelization Plan for 32-Kbps Link D-A-18
D-A-7 Typical QUICKSAT First Level AN/FCC-100 Channelization Plan for 32-Kbps Link D-A-19
D-A-8 QUICKSAT Terminal Shipboard Requirements D-A-20
D-A-9 QUICKSAT Link Orderwire Equipment Requirements D-A-20
D-A-10 LST-8000 Terminal Configuration D-A-21
D-A-11 LST-8000 Technical Characteristics D-A-23
D-A-12 Challenge Athena Services D-A-24
D-A-13 TROJAN SPIRIT II Technical Specifications D-A-28
D-A-14 TROJAN SPIRIT II IEW Systems Interfaces D-A-29

D-A-A-1 Comparison of TD-1389(V) Interface Card Requirements D-A-A-1
D-A-A-2 LRM Digital Line Data Rates D-A-A-4
D-A-A-3 Line Interface Card Timing Options.....D-A-A-5
D-A-A-4 FSK Line Card Data Rates (bps) D-A-A-5
D-A-A-5 LRM FSK Interface Characteristics.....D-A-A-6
D-A-A-6 LRM Mode Composite Data Rates.....D-A-A-8
D-A-A-7 AN/GSC-24 Mode Composite Rates (bps) D-A-A-11
D-A-A-8 LRM User Equipment Interface Characteristics.....D-A-A-15
D-A-A-9 LRM Composite Side Equipment Interface Characteristics.....D-A-A-17
D-A-A-10 TD-1337 Technical Interface Characteristics D-A-A-20
D-A-A-11 TD-1337 16 Kbps DVOW Connectivity D-A-A-28

D-A-B-1 AN/TSC-93B(V)1 Technical Characteristics D-A-B-1
D-A-B-2 AN/TSC-93B(V)1 Major Equipment Items.....D-A-B-7
D-A-B-3 TD-1337(V)2/G Input/Output Configurations.....D-A-B-9
D-A-B-4 Modulation and Coding Effects on Bandwidth D-A-B-11

D-A-C-1 AN/TSC-94A Characteristics.....D-A-C-1
D-A-C-2 AN/TSC-94A(V) Major Equipment Items.....D-A-C-6
D-A-D-1 AN/TSC-85B(V) Technical Characteristics..... D-A-D-1
D-A-D-2 AN/TSC-85B(V)1 Major Equipment Items..... D-A-D-8
D-A-D-3 TD-1337(V)l/G Input Configurations..... D-A-D-10

D-A-E-1 AN/TSC-100A Technical Characteristics D-A-E-2

D-A-E-2 AN/TSC-100A(V) Major Equipment Items D-A-E-6

D-A-F-1 AJCM Technical Interface Characteristics.....D-A-F-11

D-A-H-1 End-to-End Line Module Compatibility-Groups D-A-H-7
D-A-H-2 Allowable Data-Rate Selections for FSK Signals D-A-H-9

D-B-1 Air Force Milstar Terminal Characteristics Summary D-B-7

D-B-2 Navy Milstar Terminal Characteristics Summary D-B-8
D-B-3 Army Milstar Terminal Characteristics Summary D-B-9

D-B-A-1 AF Milstar Terminals I/O Devices D-B-A-1

D-B-B-1 AN/USC-38(V) Equipment Complement by Platform D-B-B-1

D-C-1 UHF Satellite Access Request D-C-3
D-C-2 Primary Control Center (PCC) Satellite Assignment D-C-5
D-C-3 AN/WSC-3 Technical Characteristics D-C-5
D-C-4 AN/WSC-3 Interfaces D-C-6
D-C-5 AN/PSC-3 and AN/VSC-7 Components D-C-7
D-C-6 AN/PSC-3 and AN/VSC-7 Technical Characteristics D-C-9
D-C-7 AN/PSC-7 Technical Characteristics D-C-10
D-C-8 LST-5B Technical Characteristics D-C-13
D-C-9 HST-4A Technical Characteristics.....D-C-15
D-C-10 Selectable Data Rates D-C-18

E-1 WF-16/U Characteristics E-2
E-2 CX-4566/U Characteristics..... E-2
E-3 CX-11230 Characteristics E-2
E-4 AN/TAC-1 Equipment Compatibility, Interface, and Connectivity E-6
E-5 RT-1462/TRC-170 TSSR Characteristics..... E-8
E-6 AN/GRC-239 TSSR Technical Characteristics E-17

F-A-1 AN/TRC-138A Major Equipment Items F-A-3
F-A-2 AN/GRC-222 Technical Characteristics F-A-3
F-A-3 MD-1024 Technical Characteristics F-A-4
F-A-4 MD-1026 Characteristics.....F-A-4

F-B-1 AN/TRC-173 Major Equipment Items F-B-3
F-B-2 AN/GRC-103(V)4 Technical Characteristics F-B-4
F-B-3 LSCDM Characteristics F-B-4
F-B-4 MD-1065/G Characteristics F-B-5
F-B-5 TD-1234 Characteristics..... F-B-5
F-B-6 TD-1233 Characteristics..... F-B-6

F-C-1 AN/TRC-174 (V) Major Equipment Items F-C-2

F-D-1 AN/TRC-175 Major Equipment Items F-D-3

F-E-1 AN/MRC-142 Terminal Components F-E-1
F-E-2 RT-1601 Technical Characteristics F-E-2
F-E-3 CDA Electrical Characteristics..... F-E-3

F-F-1 AN/GRC-226 and Antenna Technical Characteristics F-F-2
F-F-2 AN/GRC-224 and Antenna Technical Characteristics F-F-4
F-F-3 MSE Multichannel Radio Assemblage Configurations.....F-F-6

G-1 AN/TSC-60(V) Series Antenna Configuration and Power Output G-5
G-2 AN/TSC-60(V)2 and (V)3 Technical Characteristics G-6
G-3 AN/TSC-60(V)5 Technical Characteristics..... G-9
G-4 OZ-11A/TSC-60(V) Radio Set Group.....G-12
G-5 AN/TSC-60(V)9 Technical Characteristics.....G-12
G-6 AN/TSC-120 System Components G-15
G-7 AN/TSC-120 Technical Characteristics.....G-15
G-8 AN/TSC-122 System Components G-19
G-9 AN/TSC-122 Technical Characteristics.....G-20
G-10 AN/TSC-95 Basic Operating Modes G-22
G-11 AN/TSC-118 Equipment.....G-24

G-12 AN/TSC-118 Technical Characteristics G-25

H-1 STEP Sites and Related Programs H-5
H-2 External Interface Capability by SMU Configuration..... H-10
H-3 Expected STEP Baseband Equipment Transition..... H-21
H-4 Validated Minimum Initial JTF Requirements into DISN..... H-30
H-5 Estimated Mature JTF DISN Requirements H-31
H-6 Pre-positioned DISN Network Access (Single and Dual STEP) H-32
H-7 STEP TRI-TAC AN/FCC-100 Carding H-39
H-8 Single Navy STEP Initial Operational Capabilities..... H-40
H-9 Single STEP SMU Carding (User Cards)..... H-41
H-10 Location of DSN BWMs and Switches..... H-42
H-11 Location of DRSN Hosts H-43
H-12 Locations of JWICS Hosts H-43

ENCLOSURE A

JOINT TRANSMISSION SYSTEM PLANNING

Introduction. The purpose of this enclosure is to aid the planner in applying information found in this manual to plan joint transmission systems. The major areas discussed are backbone transmission system planning and multiplex system planning, (Appendix A) and propagation planning systems, (Annex A). To assist the planner, a transmission system planning example is included in Appendix A, subparagraph 1c, and a multiplex planning example is found in Appendix A, paragraph 3. Appendix B addresses orderwire systems, while Appendix C consists of system timing information and Appendix D addresses crew/channel worksheets.

(INTENTIONALLY BLANK)

APPENDIX A TO ENCLOSURE A

BACKBONE SYSTEM AND MULTIPLEX PLANNING

1. Backbone System Planning

a. General Planning Information. The joint backbone transmission system is a critical step in planning the overall transmission system. In addition to the broad decisions such as where the nodes will be located, there are a number of detailed decisions that must be made by the planner. These include the following:

(1) Determine the transmission equipment to be used at each end of the individual system or links.

(2) Determine the circuit requirements between nodes.

(3) Determine the system or link data rate for each transmission system or link between two nodes.

(4) Determine how each circuit will be interfaced to the transmission system.

(5) Determine the organization responsible for installing, operating, and maintaining each system and link.

(6) Once these decisions have been made, transmit them to the organizations responsible for implementing the individual system or links. Two data sheets (System Summary Sheet and Circuit Summary Sheet) are included in this appendix to assist the planner in defining the backbone system. Instructions for completing the data sheets are found in Appendix D. Data compiled during the planning of the joint backbone system are also used to develop the multiplex plan.

b. System Planning. As a minimum, there are four steps the planner must complete in order to accomplish the items listed in subparagraph 1a. These are as follows:

(1) Complete a diagram of the joint backbone transmission system.

(2) Complete a System or Link Summary Sheet.

(3) Complete a Circuit Summary Sheet for each system or link in the joint backbone system.

(4) Develop a System Engineering Plan to show how user circuits interface to the joint backbone system.

c. Backbone Transmission System Planning Example. Using the information in subparagraphs 2a and 2b and Appendix D, the planner can design the joint backbone transmission system. The accurate information needed to plan a backbone transmission system includes user requirements and types of equipment that will be provided to support the system. This paragraph provides an example transmission system plan for a hypothetical joint task force (JTF).

(1) Joint Backbone System Diagram. The backbone system diagram is used by the planner to graphically depict the joint transmission system. As a minimum, it includes the following items. Figure A-A-1 is an example of a joint backbone system diagram.

(a) The nodes to be directly supported by the joint backbone system; e.g., JTF, special operations command (SOC), Army special operations forces (ARSOF), Air Force forces (AFFOR), Army forces (ARFOR), and Marine forces (MARFOR).

(b) The type of transmission media that will be used to interconnect the various nodes; e.g., satellite, multichannel terrestrial, HF radio, cable.

(c) The system or link designator for each individual link of the joint backbone system.

(2) System or Link Summary Sheet. This data sheet provides the planner with a list of the transmission system or links that make up the joint backbone system. When completed, it also provides the planner with a quick reference of the nodes terminating the system or link, the type of transmission equipment supporting the system or link, the unit responsible for the system or link, and the required operational date. An example of the data sheet is shown in Figure A-A-2. Instructions for completing the sheet are found in Appendix D.

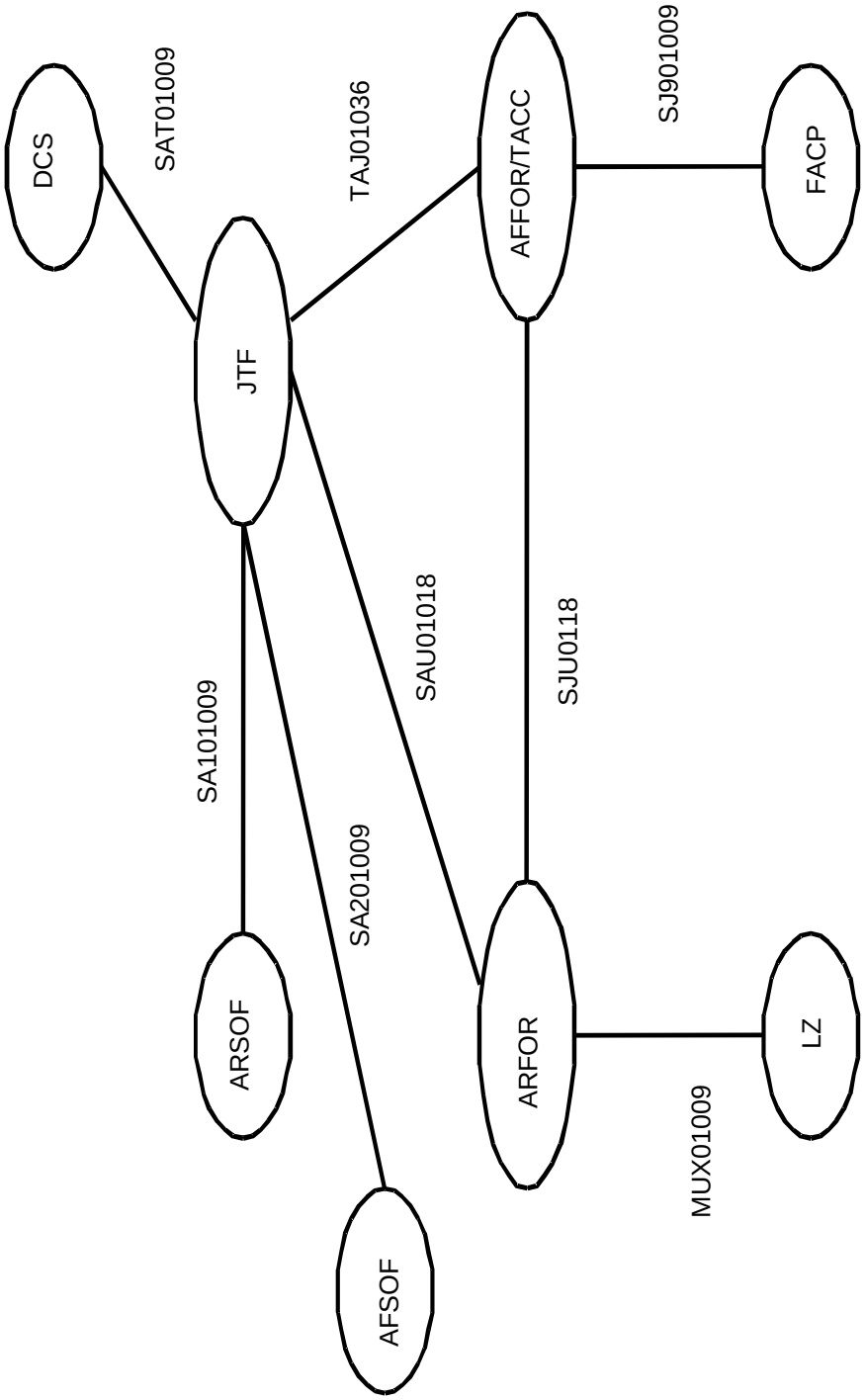

NOTE: The first character of the system/link designator denotes the transmission medium
S = Satellite, M = Microwave, T = Tropo

Figure A-A-1. Planning Example--Backbone Transmission System Diagram

System/Link Designator	From "A"Loc	"A' Equip	Responsible Unit	To "B" Loc	"B" Equip	Responsible Unit	Operational Date
SAT01009	JTF	TSC-85B	JCSE	DCS	TSC-85B	235 SIG	5/5/93
SAU01018	JTF	TSC-85B	JCSE	ARFOR	TSC-85B	11 SIG	5/5/93
TAJO1O36	JTF	TRC-170	5 CCG	AFFOR TACC	TRC-170	5CCG	5/5/93
SA101009	JTF	TSC-85B	JCSE	SFOB	TSC-93B	JCSE	5/5/93
SJU01036	AFFOR/ TACC	TSC-100A	5 CCG	ARFOR	TSC-85B	11 SIG	5/5/93
SJ901009	AFFOR/ TACC	TSC-100A	5 CCG	FACP	TSC-94A	71 TCF	5/5/93
MUX011009	AFFOR	TRC-174	11 SIG	LZ	TRC-173	11 SIG	5/5/93

Pg. of

Figure A-A-2. Transmission System or Link Summary Sheet

(3) Circuit Summary Sheet. This data sheet is a two-part sheet that provides a description of each transmission system or link and a list of the individual circuits carried by that system or link. Part I of the sheet identifies the transmission system or link being defined and provides information concerning system or link characteristics. Part II provides information associated with the individual circuits traversing the system or link being defined. Figures A-A-3 through A-A-5 represent examples of completed circuit summary sheets for three of the systems or links in the backbone system. For an actual plan, a circuit summary would be completed for every system or link in the backbone system. Note that overhead channels, communications nodal control element (CNCE) test channels, and traffic channels must be included on this data sheet. Instructions for completing the sheet are found in Appendix D, Crew and Channel Assignment Worksheets.

(4) System Engineering Plan. The System Engineering Plan is an essential part of the planning process. It basically consists of a nodal schematic of each node serviced by the joint backbone system. The purpose of the schematics is to show user connectivity to the backbone system. Figures A-A-6 through A-A-8 provide examples of three of the nodal schematics. Note that for an actual plan, there would be a nodal schematic for each node served by the backbone system. The System Engineering Plan should be an integral part of the Annex K Communications Plan. Information contained in this plan is used in the development of the digital multiplex system plan.

2. Planning the Multiplex Equipment in a Tactical Digital Network. Based on the data obtained as a result of planning the joint backbone system, the broad overall planning of a tactical digital multiplex network can proceed. A multiplex plan should be developed for each node in the network. Multiplex planning, like backbone system planning, requires the planner to make a number of detailed decisions. These fall into the following four categories (a) group data rate selection, (b) channelization within the network, (c) card selection, and switch setting for loops, and (d) timing.

a. Data Sheets. Once these decisions are made, they are passed to the affected operators and maintainers for implementation. In order to transmit this information, several data sheets are included in this Enclosure. Instructions for completing the following data sheets are found in Appendix D, Crew and Channel Assignment Worksheets.

CIRCUIT SUMMARY SHEET

Part I SYSTEM IDENTIFICATION											
System/Link Designator TAJ01036	Analog / Digital ✓			Data Rate 1152 kbps		No of Chnls 36	Modulation: Diphase ✓ / Dipulse		MSF Type 4A		
Part II CIRCUIT DESCRIPTION											
			CCSD								
Chnl No	RP	Use	From/To	"A" LOC	"A" Equip	"B" Loc	"B" Equip	Link 1	Link 2	Link 3	Remarks
01	-	EEXP	AJE3	JTF	TSQ-111		TSQ-111	TAJ01036			Overhead
02	1B	EOGA	AJE4	JTF	TYC-39	AFFOR	TYC-39	TAJ01036			TYC-39 IST
03	2G	EUCP	AJ83	JTF	TYC-39	AFFOR	TWAC	TAJ01036			300 BD WXTTY
04	1D	EUCP	AJ83	JTF	TTC-39A(V)1	AFFOR	TTC-39	TAJ01036			DTG083
05	1D	EUCP	AJ83	JTF	TTC-39A(V)1	AFFOR	TTC-39	TAJ01036			DTG083
•	•	•	•	•	•	•		•			•
•	•	•	•	•	•	•		•			•
•	•	•	•	•	•	•		•			•
33	1D	EUCP	AJ83	JTF	TTC-39	AFFOR	TTC-39	TAJ01036			DTG083
34	1C	JPCI	J283	AFFOR / TACC	DSVT	AFSOF	DSVT	TAJ01036	SA201009		DAS-DTG083
35	1C	JPCI	JI83	AFFOR / TACC	DSVT	ARSOF	DSVT	TAJ01036	SA201009		DAS-DTG083
36	1A	CNCE	Test	JTF	TSQ-111	AFFOR	TSQ-111	TAJ01036			CNCE Test

Figure A-A-3. Circuit Summary Sheet-Link TAJ01036

CIRCUIT SUMMARY SHEET

Part I: SYSTEM IDENTIFICATION

System/Link Designator SAU01018 | Analog ____ Digital ____ | Data Rate 576 Kbps | No of Chnls 18 | Modulation Diphase ✓ Dipulse ____ | MSF Type 1

Part: II CIRCUIT DESCRIPTION

		CCSD									
Chnl No	RP	Use	From/To	"A" LOC	"A" Equip	"B" Loc	"B" Equip	Link 1	Link 2	Link 3	Remarks
01	-			JTF	TSQ-111	ARFOR	TTC-39A(V)1	SAU01018			Overhead
02	1B	EEXP	AUE5	JTF	TYC-39	ARFOR	TYC-39	SAU01018			TYC-39 IST
03	2G	EOGA	AXE6	JTF	TYC-39	LZ	UGC-129	SAU01018	MUX01018		150 BD WX TTY
04	1D	EUCP	AU84	JTF	TTC-39A(V)1	ARFOR	TTC-39	SAU01018			DTG084
05	1D	EUCP	AU84	JTF	TTC-39A(V)1	ARFOR	TTC -39	SAU01018			DTG084
•	•	•	•	•	•	•	•	•			•
•	•	•	•	•	•	•	•	•			•
•	•	•	•	•	•	•	•	•			•
16	1D	EUCP	AU84	JTF	TTC-39	ARFOR	TTC-39	SAU01018			DTG084
17	1C	UKKP	U184	ARFOR	DSVT	ARSOF	DSVT	SAU01018	SA101009		DAS-DTG084
18	1A	CNCE	Test	JTF	TSQ-111	ARFOR	TTC-39	SAU01018			CNCE Test

Figure A-A-4. Circuit Summary Sheet- Link SAU01018

CIRCUIT SUMMARY SHEET

Part I SYSTEM IDENTIFICATION					
System/Link Designator SA101009	Analog ____ Digital ✓	Data Rate 288 Kbps	No of Chnls 9	Modulation Diphase ✓ Dipulse ____	MSF Type 1

Part II Circuit Description

		CCSD									
Chnl No	RP	Use	From/To	"A" LOC	"A" Equip	"B" Loc	"B" Equip	Link 1	Link 2	Link 3	Remarks
01	-			JTF	TSQ-111	ARSOF	TTC-39A(V)1	SA101009			Overhead
02	1B	EUAA	A1E7	JTF	TYC-39	ARSOF	TYC-39	SA101009			150 BD GENSER TTY
03	2E	EUBV	A1S1	JTF	TTC-39	ARSOF	UGC-129	SA101009	MUX01018		SEC LL
06	2E	EUBV	AI84	JTF	TTC-39	ARSOF	DSVT	SA101009			SEC LL
07	1C	JCPI	J183	AFFOR	DSVT	ARSOF	DSVT	TAJ01036	SA101009		DAS
08	1C	UKKP	U184	ARFOR	DSVT	ARSOF	DSVT	SA401018	SA101009		DAS
09	1A	CNCE	Test	JTF	TSQ-111	ARSOF	RMC	SA101009			

Figure A-A-5. Circuit Summary Sheet- Link SA101009

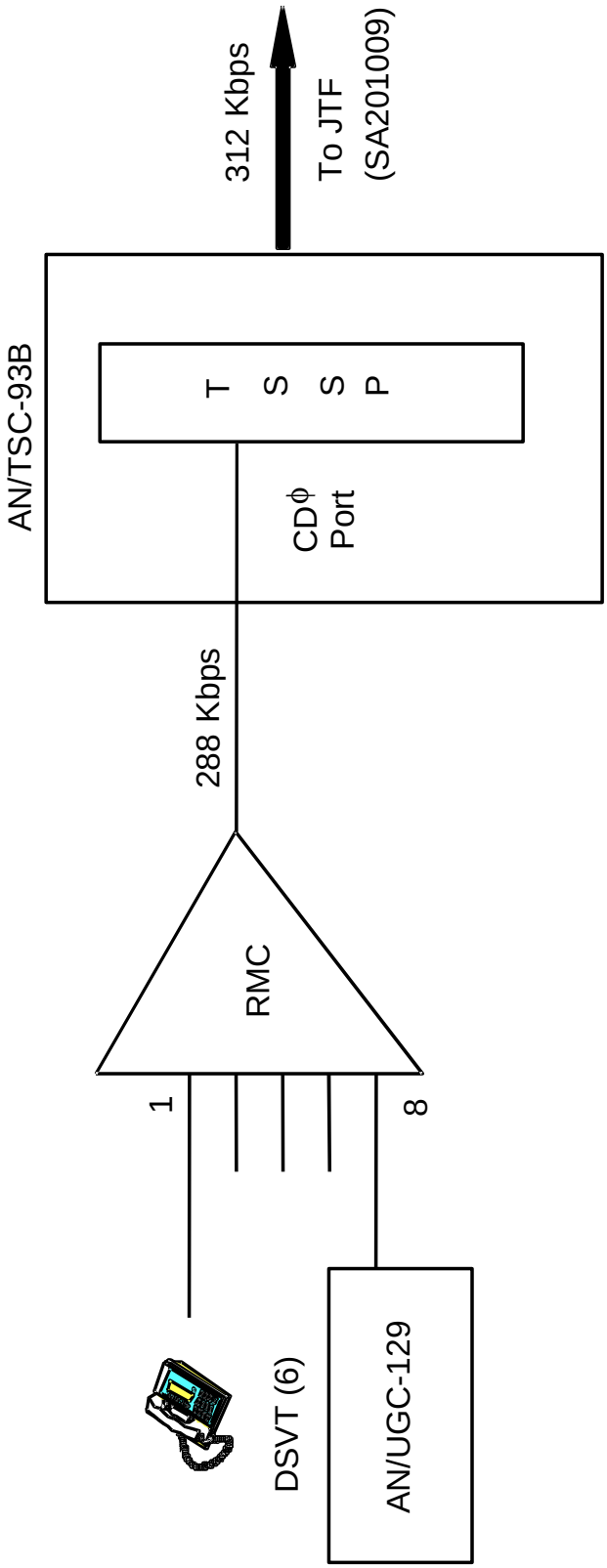

Figure A-A-6. AFSOF Nodal Schematic

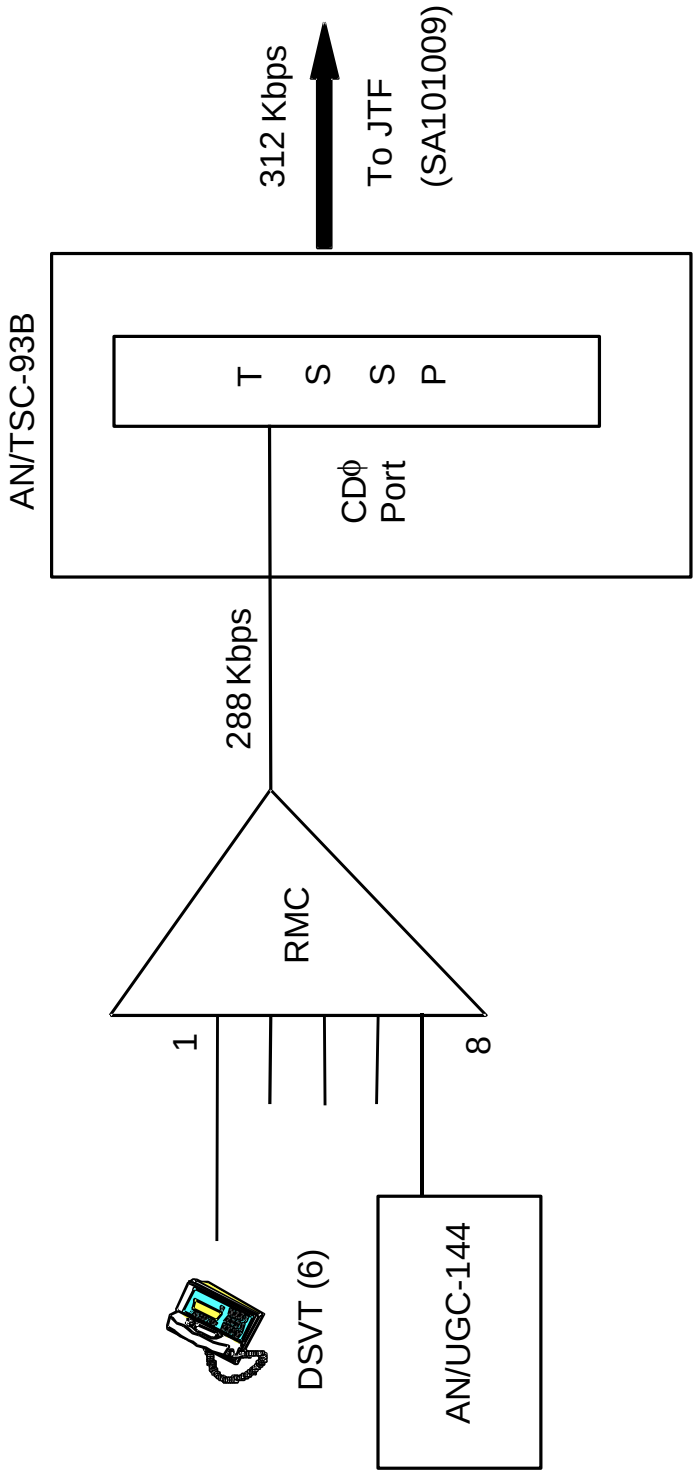

Figure A-A-7. ARSOF Nodal Schematic

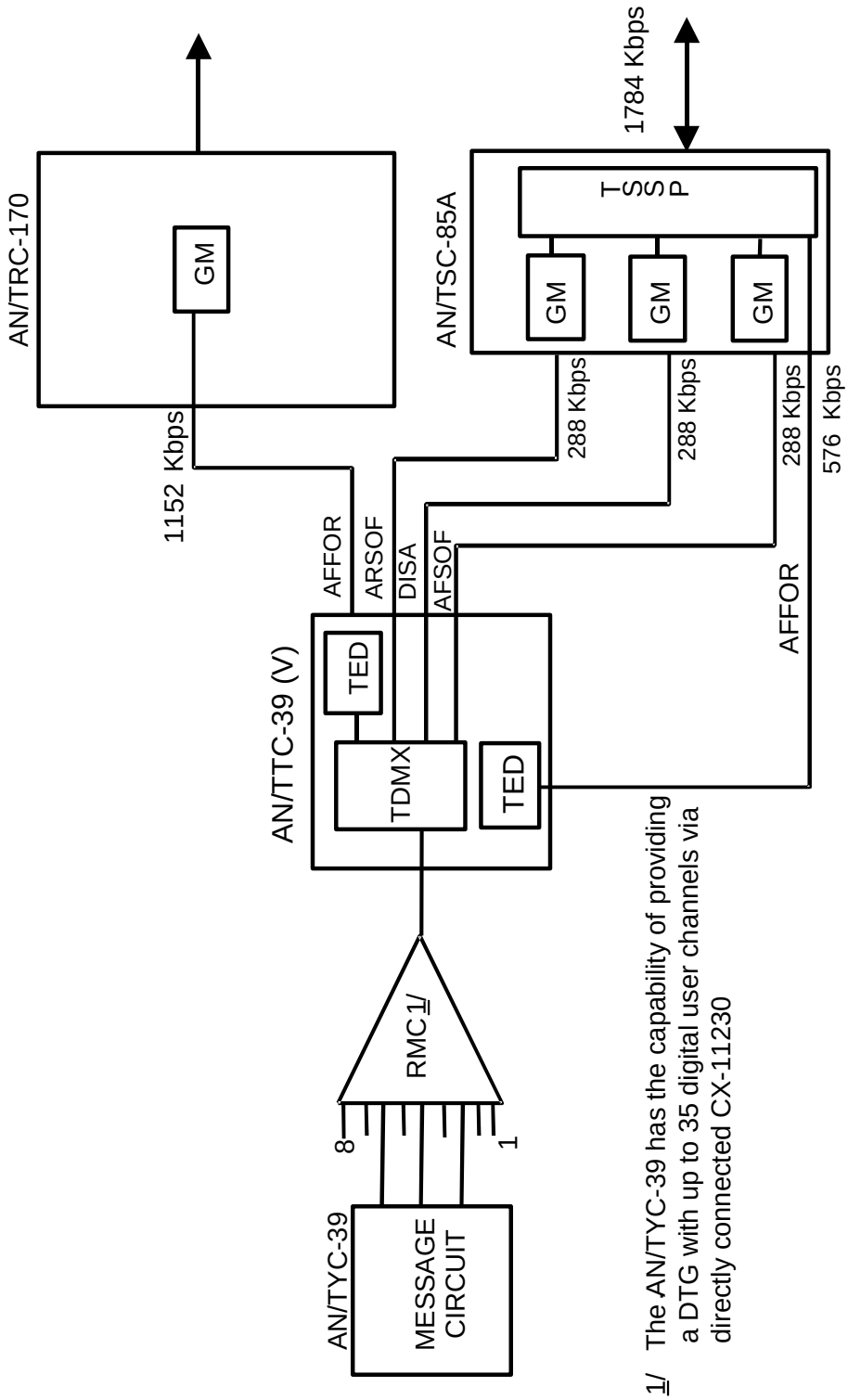

1/ The AN/TYC-39 has the capability of providing a DTG with up to 35 digital user channels via directly connected CX-11230

Figure A-A-8. JTF Nodal Schematic

(1) Channel Assignment Sheet. This sheet is used to record the allocation of the time slots within digital groups at an AN/TTC-39 series circuit switch (CS), trunk group multiplexer (TGM), or remote multiplexer combiner (RMC).

(2) CNCE Channel Assignment Sheet. This sheet specifies the channel reassignments that are to be made in the CNCE's Channel Reassignment Function (CRF).

(3) Loop Group Multiplexer (LGM) Crew Assignment Sheet. This sheet lists the terminations and specifies loop modems, channel rate, and timing for an LGM.

(4) RMC Crew Assignment Sheet. This sheet lists the terminations and specifies loop modems, channel rate, and timing for an RMC.

(5) Remote Loop Group Multiplexer (RLGM) Crew Assignment Sheet. This sheet lists the terminations and specifies loop modems, channel rate, and timing for an RLGM.

(6) TGM Crew Assignment Sheet. This sheet specifies the configuration of the TGM.

(7) CNCE Crew Assignment Sheet. This sheet specifies the size, type, channel rate, and equipment path of all digital groups entering or leaving the CNCE's CRF.

b. Group data rate selection is done by evaluating the equipment capabilities and operational requirements. The following general guidelines should be followed:

(1) Normally, the minimum data rate should be chosen that will support the communications requirements. (This will tend to provide a better BER and more reliable operation.)

(2) If expansion is anticipated at a location, consider allocating more channels initially and leaving some unused. This helps to prevent outages during the time transmission equipment is reconfigured. For example, assume an AN/TTC-39A(V)1 is providing a digital group with eight local DSVTs through a CNCE and an AN/TRC-170 link to subscribers located off a distant AN/TSQ-146 (see Figure A-A-9). If the

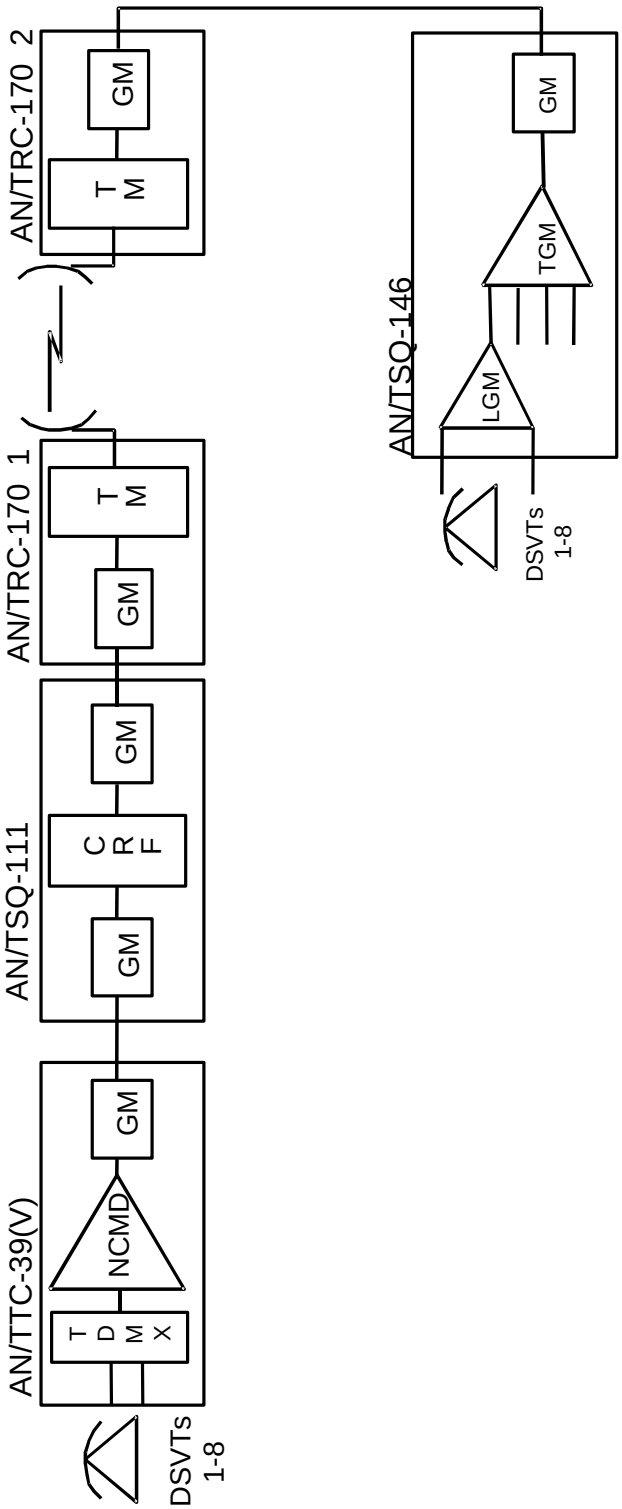

Figure A-A-9. Equipment Reconfiguration Example Network

eight DSVTs are increased to 16, data-rate changes must be made at the following equipment:

(a) LGM in AN/TSQ-146.

(b) TGM in AN/TSQ-146.

(c) GM in AN /TSQ-146.

(d) GM in AN/TRC-170 #2.

(e) Tropo Modem in AN/TRC-170 #2.

(f) Tropo Modem in AN/TRC-170 #1.

(g) TGM (if used) in AN/TRC-170 #1.

(h) Group Modem in AN/TRC-170 #1.

(i) Two Group Modems in CNCE.

(j) Group Modem in AN/TTC-39A(V)1.

(k) In addition, the number of nine-channel multiplexer demultiplexer (NCMD) used in the AN/TTC-39(V) must be increased from one to two. The size of two digital groups in the CNCE must be increased via the database generation process. In addition, a modification must be made to the automated digital test (ADT) command in the AN/TTC-39(V). If timing was being derived from the incoming group, a change in the TDMX rate switch is also necessary. From the time that the change process starts until all changes are complete, the communications link will be down. Use the 576-Kbps family rates if possible. These rates use the AN/TTC-39(V) TDMX more efficiently. (See CJCSM 6231.02A.) Avoid secondary channels if possible. (See subparagraph 2c(3).)

c. Network Channelization. Channelization is the matching of digital time slots at the different multiplexers. The channelization within a network may be straightforward or complex. If the network is symmetrical (with respect to multiplexing), then channelization is simple. Figure A-A-10 is an example of a symmetrical network. Group modems and transmission equipment have been omitted for clarity. (The group modems and transmission equipment do not rearrange the bit sequence

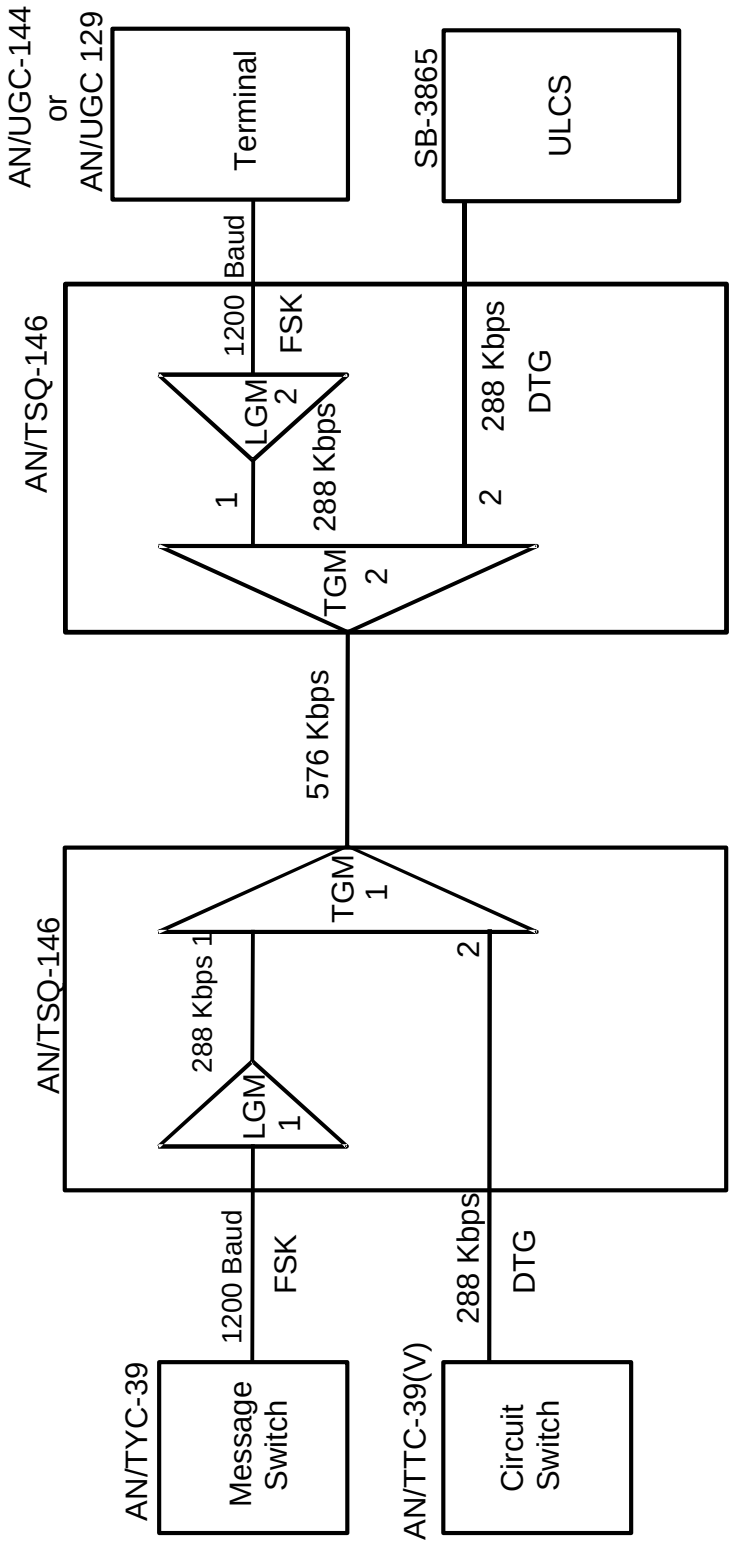

Figure A-A-10. Example of a Symmetrical Network

in the digital data stream.) In this case, the left side of the figure is a mirror image of the right side.

(1) The channelization in LGM 1 and LGM 2 is the same. The planner can be indifferent to the channel sequence in the supergroup between the two TGMs. (Because there is no access to the supergroup between the TGMs, the exact channel sequence does not matter.) In this case, little planning is necessary. As long as the network is symmetrical, the channelization at each terminal will be the same.

(2) Figure A-A-11 is an example of a nonsymmetrical network. Again, group modems and transmission equipment have been omitted for clarity. In this case, detailed planning is required. The planner must understand how the DGM equipment multiplexes the data streams together. In the example, the TGM will multiplex the two group inputs. The first input is the trunk group from the SB-3865. The second is the loop group from the LGM. In the TGM's supergroup output data stream, the two groups will be interleaved, first a channel from the SB-3865 group and then a channel from the LGM loop group. When the NCMD channels are assigned in the AN/TTC-39(V), the interleaving must be considered. Assume that in the AN/TTC-39(V) the incoming digital group is connected to NCMDs 7 and 8. In this case the channel appearances in the AN/TTC-39(V) are shown in Table A-A-1. The table lists the 18 NCMD channels in the AN/TTC-39(V) and the distant termination of each channel.

(3) Secondary Channels. Certain configurations of the TGM in nonsymmetrical networks can create secondary traffic or secondary signaling channels. These are multiple-sampled channels that are a potential source of confusion and error. Figure A-A-12 is an example TGM configuration that will not create secondary traffic channels. Four groups, (one at 1,152 Kbps, one at 576 Kbps and, two at 288 Kbps) are being multiplexed to produce a 2,304 Kbps supergroup. This combination of rates will use a type 3C MSF. (See Table B-A-8.) The output data stream sampling sequence is G1, G2, G1, G3, G1, G2, G1, G4. (See Table B-A-10.) Note that each time the group three and four inputs are sampled once, the group two input is sampled twice and the group one input is sampled four times.

(a) Figure A-A-13 is a TGM configuration that creates secondary traffic channels. Note that the only change from Figure A-A-12 is that group two is now at 288 Kbps.

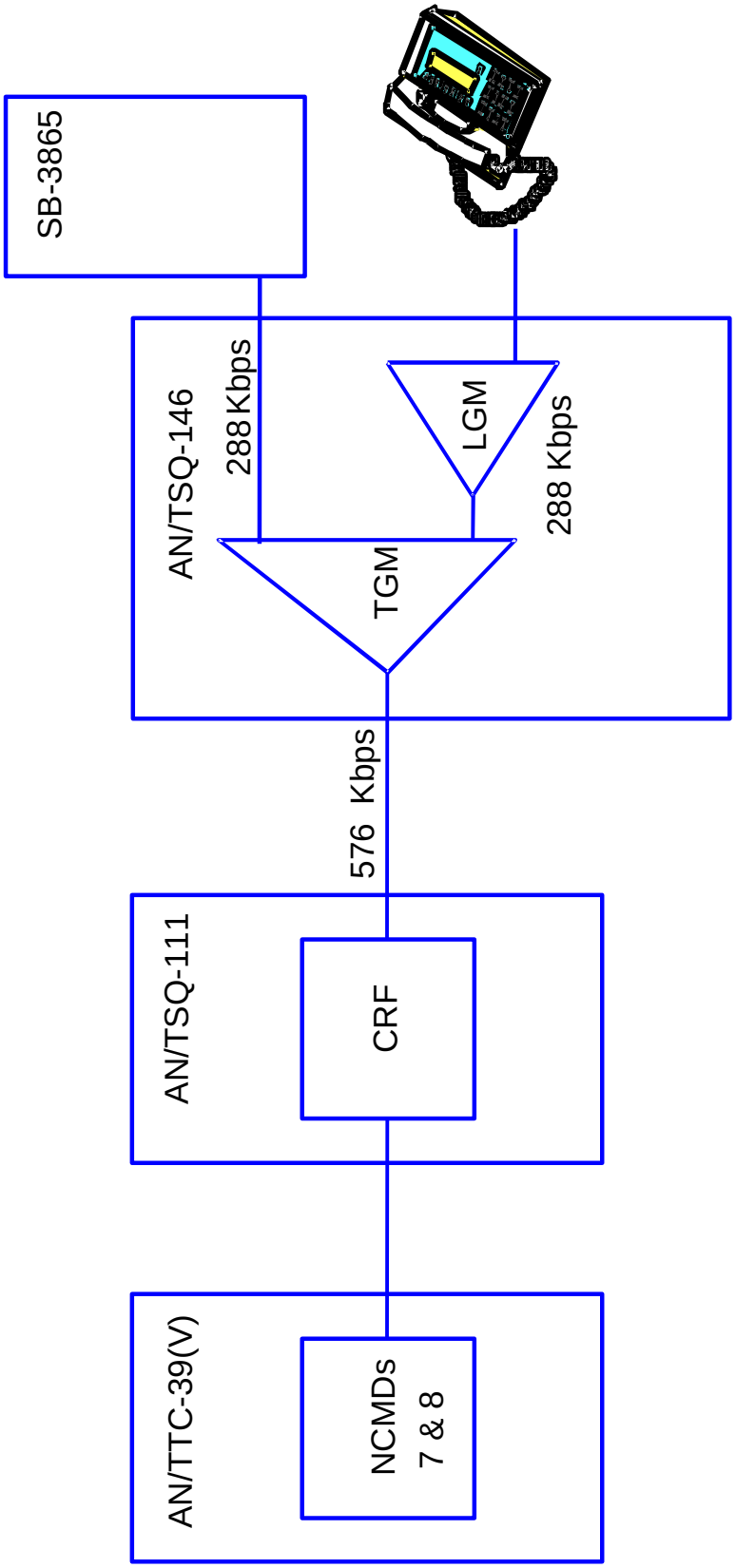

Figure A-A-11. Example of a Nonsymmetrical Network

Table A-A-1. Channel Sequence at AN/TTC-39 Series Circuit Switches

Time Slot	NCMD/Channel	Distant Termination
1	7/Ch 1	SB-3865, Ch 1 (Overhead from the Group 1 input to the TGM)
2	7/Ch 2	Overhead channel from the LGM input into TGM Group 2. This NCMD channel should be assigned in the AN/TTC-39 series CS as a Type 119 (to prevent errors).
3	7/Ch 3	SB-3865, Ch 2. This is the first traffic channel in the digital group between the switches.
4	7/Ch 4	LGM traffic channel 1
5	7/Ch 5	SB-3865, Ch 3
6	7/Ch 6	LGM traffic channel 2
7	7/Ch 7	SB-3865, Ch 4
8	7/Ch 8	LGM traffic channel 3
9	7/Ch 9	SB-3865, Ch 5
10	8/Ch 1	LGM traffic channel 4
11	8/Ch 2	SB-3865, Ch 6
12	8/Ch 3	LGM traffic channel 5
13	8/Ch 4	SB-3865, Ch 7
14	8/Ch 5	LGM traffic channel 6
15	8/Ch 6	SB-3865, Ch 8
16	8/Ch 7	LGM traffic channel 7
17	8/Ch 8	SB-3865, Ch 9
18	8/Ch 9	LGM traffic channel 8

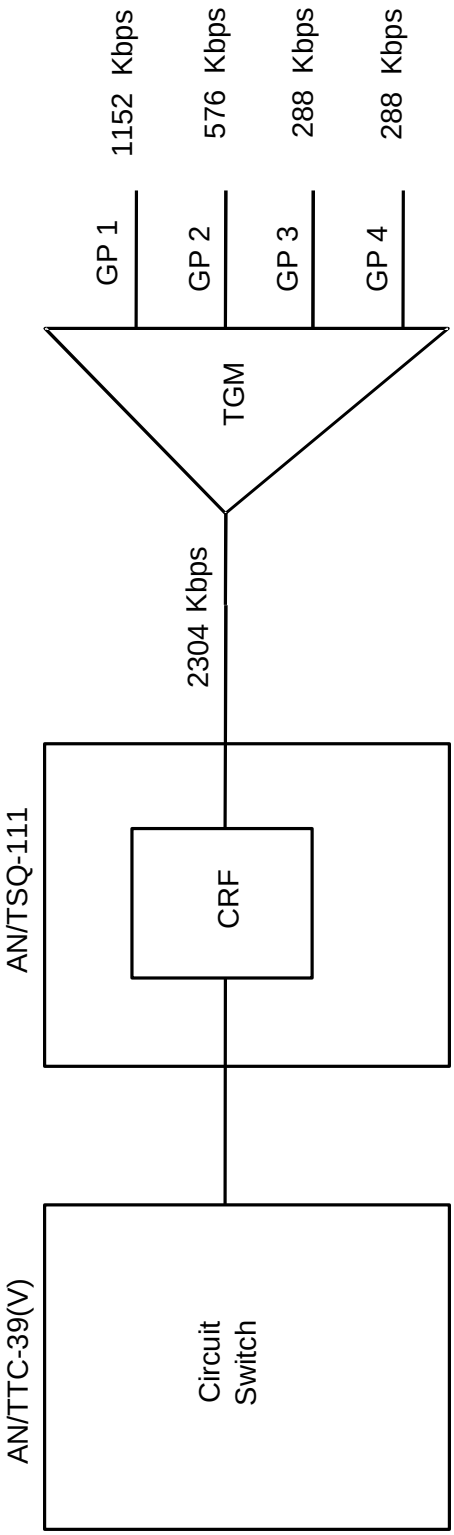

Figure A-A-12. Example TGM Configuration That Does Not Create Secondary Traffic Channel

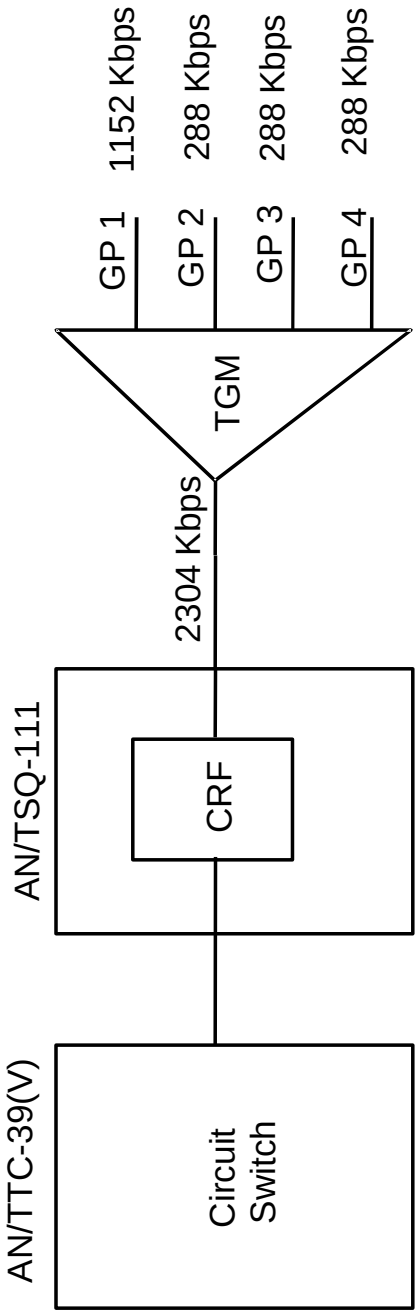

Figure A-A-13. Example TGM Configuration That Creates Secondary Traffic Channel

is that group two is now at 288 Kbps. This new combination of rates uses the same MSF and has the same bit sampling sequence. (See Table B-A-8.) Because the group two input is now only half its original rate, each data bit in group two must be sampled twice. This second sample of each bit is called the secondary traffic channel (or secondary signaling channel) in the AN/TTC-39A(V)1. The AN/TTC-39(V)1 data base must be programmed to recognize these secondary channels. (See CJCSM 6231.02A.)

(b) Secondary channels will occur any time the sum of the group inputs does not equal the supergroup output. If the sum of the inputs does not equal the output, see Tables B-A-7 or B-A-8. Any input that is not equal to the maximum rate allowed for that specific output supergroup rate and MSF will be multiple sampled. This will create secondary traffic (or signaling) channels. For example, in Figure A-A-13 the sum of the group inputs is 2,016 Kbps (1,152 plus 288 plus 288 plus 288). This does not equal the supergroup rate of 2,304 Kbps. This particular combination of group and supergroup rates is found in Table B-A-8, line 8. The inputs to groups one, three, and four are run at the highest rate allowed for this MSF and supergroup. However, group two is run at 288 Kbps while the table indicated it could be run at 576 Kbps. The second group (group 2) will be multisampled once for each data sample. In the output data stream the secondary channel is the second bit.

(c) Every effort should be made to avoid secondary channels. Note that in Figures A-A-12 and A-A-13 both supergroups operate at 2,304 Kbps. There is nothing gained on the supergroup side. The only reason to create secondary channels in the example would be that the transmission media transmitting group two would only support a 288 Kbps rate. If this is the case, secondary channels will occur. However, if the media will support a 576-Kbps rate, the group should be operated at 576 Kbps and the unused channels left as spares.

d. CNCE Impact on the Network. The channelization within a network may be affected by the CNCE, depending on the manner in which digital channels are reassigned by the CRF. The CRF beaks down digital groups into channels, reassigns the channels, and combines them into groups. When the channels of a digital group are reassigned one-for-one to another digital group (Figure A-A-11), the channel sequence is unaffected by the CNCE. However, when the channels of a digital group are not reassigned one-for-one to another digital group by the CRF, the bit sequence in the digital data stream is rearranged. It is

quite common in the CNCE to take advantage of the capabilities of the CRF to reassign some channels of a digital group to one or more other groups, reassign others to discrete channels, or leave yet others as spare. When this is done, the digital groups are comprised of entirely different channels. The planning example in paragraph 1c shows this more fully.

e. Loop Card Selection and Switch Settings. The loop multiplexers in the DGM family can use either a digital loop modem card or an analog applique unit (AAU) card. The digital loop modem card is used for digital loops and the AAU card is used for analog loops. The planner must select the card and also specify common battery power switch settings for digital loop cards or transmit and receive gain setting for AAU cards. (See paragraphs 2 and 3.)

f. Timing. A digital network must have a timing plan. See Appendix C for a discussion of system timing. Once the overall timing plan has been decided, the information must also be passed to the operators and maintainers who will set up the equipment.

g. Group or Supergroup Channel Sequence Determination. The bit sequence at the group output of each multiplexer is discussed in paragraph 8.c of Appendix A of Enclosure B. If the network is nonsymmetrical and the channel sequence must be determined after several levels of multiplexing, use the following procedure:

(1) Draw the network showing all multiplex equipment to be used at each node. Include the CRF in the CNCE and AN/TTC-39A(V)1. (Group modems, transmission equipment, and other equipment that does not change the channel sequence in the bit stream may be omitted.) The nodal schematics developed for the backbone system engineering plan should be used as the baseline for this step.

(2) Fill out the data sheets listed in subparagraph 2a for each multiplexer. Start with the most distant multiplexers from the CNCE or AN/TTC-39 series CS in each digital group. These data sheets allow the planner to match the terminal equipment connected to the multiplexers with a particular time slot in the data stream. The planner should use Tables A-A-2 through A-A-5 to determine this relationship. These tables summarize the channel sequence information found with the equipment descriptions in Enclosure B.

Table A-A-2. Bit Sequence, LGM, RMC, and RLGM 512 Kbps Family Rates

Equipment, (Number of Traffic Channels), Group Rates	Group Output Channel Sequence
LGM (7 Ch) 256 Kbps	OH, C1, C2, C3, C4, C5, C6, C7
LGM (15 Ch) 512 Kbps	OH, C1, C2, C3, C4, C5,...C14, C15
RMC (7 Ch) 256 Kbps	OH, C1, C2, C3, C4, C5, C6, C7
RLGM-B (4 Ch) to RMC-A (3 Ch) 256 Kbps 1/	OH, B1, A1, B2, A2, B3, A3, B4
RMC-B (7 Ch) to RMC-A (8 Ch) 512 Kbps 1/	OH, A1, B1, A2, B2, A3, B3, A4, B4,...A7, B7, A8
RLGM-C (4 Ch) to RMC-B (3 Ch) to RMC-A (8 Ch) 512 Kbps 1/	OH, A1, C1, A2, B1, A3, C2, A4, B2, A5, C3, A6, B3, A7, C4, A8

1/ Reference Figures B-11, B-13, and B-15.

(3) Table A-A-2 lists the channel sequence in the group output stream for LGM, RMC, and RLGM multiplexers operated at 512-Kbps family rates.

(4) Table A-A-3 provides the same information for LGMs, RMCs, and RLGMs operating at the 576 Kbps family rates.

(5) Table A-A-4 summarizes the sample sequence of input groups in the supergroup of a TGM. This table is used for all inputs to a TGM except for those from RLGMs.

(6) The bit stream sample sequence for a TGM with RLGM inputs is shown in Table A-A-5. The associated figures are A-A-14 and A-A-15.

(7) To use Tables A-A-4 and A-A-5, the planner must know the MSF being used by the TGM. The MSF is listed with the group input rates in Tables B-A-7, B-A-8, or B-A-9.

(8) Work backwards from the most distant terminals toward the CNCE or AN/TTC-39 series CS, filling in a data sheet for each multiplexer.

Table A-A-3. Bit Sequence, LGM, RMC, and RLGM 576 Kbps Family Rates

Equipment, (Number of Traffic Channels), Group Rate	Group Output Channel Sequence
LGM (8 Ch) 288 Kbps	OH, C1, C2, C3, C4, C5, C6, C7, C8
LGM (16 Ch) 576 Kbps	OH, D, C1, C2, C3, C4, C5...C14, C15, C16
RMC (8 Ch) 288 Kbps	OH, C1, C2, C3, C4, C5, C6, C7, C8
RLGM-B (4 Ch) to RMC-A (4 Ch) 288 Kbps 1/	OH, A1, B1, A2, B2, A3, B3, A4, B4
RMC-B (8 Ch) to RMC-A (8 Ch) 576 Kbps 1/	OH, D, A1, B1, A2, B2, A3, B3...A8, B8
RLGM-C (4 Ch) to RMC-B (4 Ch) to RMC-A (8 Ch) 576 Kbps 1/	OH, D, A1, B1, A2, C1, A3, B2, A4, C2, A5, B3, A6, C3, A7, B4, A8, C4

1/ Reference Figures B-A-11, B-A-13, and B-A-15.

(9) Fill out the data sheets found in Appendix D for the AN/TTC-39A(V)1 and the CNCE.

(10) Complete one node before beginning another one.

3. Digital Multiplex System Planning Example. This paragraph provides a multiplex system planning example. The purpose of the example is to demonstrate the planning principles discussed in paragraph 3. It also illustrates the use of some of the channel and crew assignment sheets found in Appendix D.

Table A-A-4. TGM Supergroup Bit Stream Sample Sequence--No Direct RLGM Inputs

MSF	Group Ratio 1/	Group Sample Sequence
3A1	1:1	G1, G2,.....
3A2	1:1:1	G1, G2, G3,....
3A3	1:1:1:1	G1, G2, G3, G4,....
3B	2:1:1	G1, G2, G1, G3,....
3C	4:2:1:1	G1, G2, G1, G3, G1, G2, G1, G4

1/ The ratio of the group inputs in the TGM.

Table A-A-5. TGM Supergroup Bit Stream Channel Sequence--Direct RLGM Inputs

Input	MSF	Channel Sequence
RLGM-A to Port 1 and RLGM-B to Port 2	D2	OH, A1, B1, B2, A3, B3, A4, B4
RLGM-J to Port 1 RLGM-K to Port 2, RLGM-L to Port 3, and RLGM-M to Port 4	D1	OH, D, J1, K1, L1, M1, J2, K2, M2....J4, K4, L4, M4

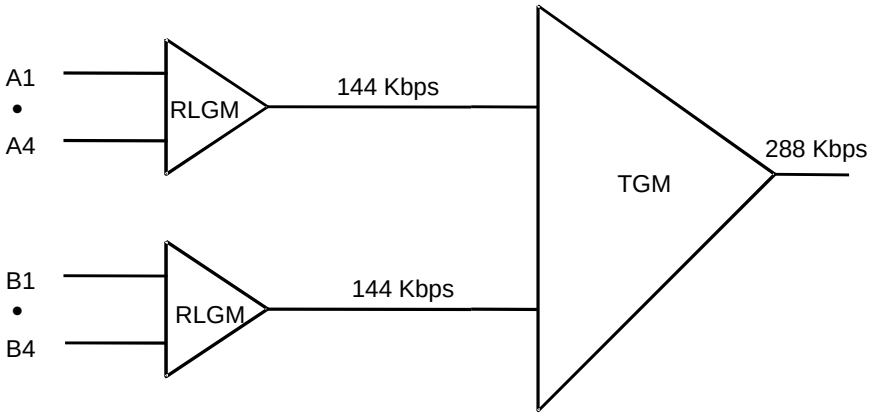

Output Channel Sequence: OH,A1,B1,A2,B2,A3,B3,A4,B4

Figure A-A-14. Two RLGMs into a TGM

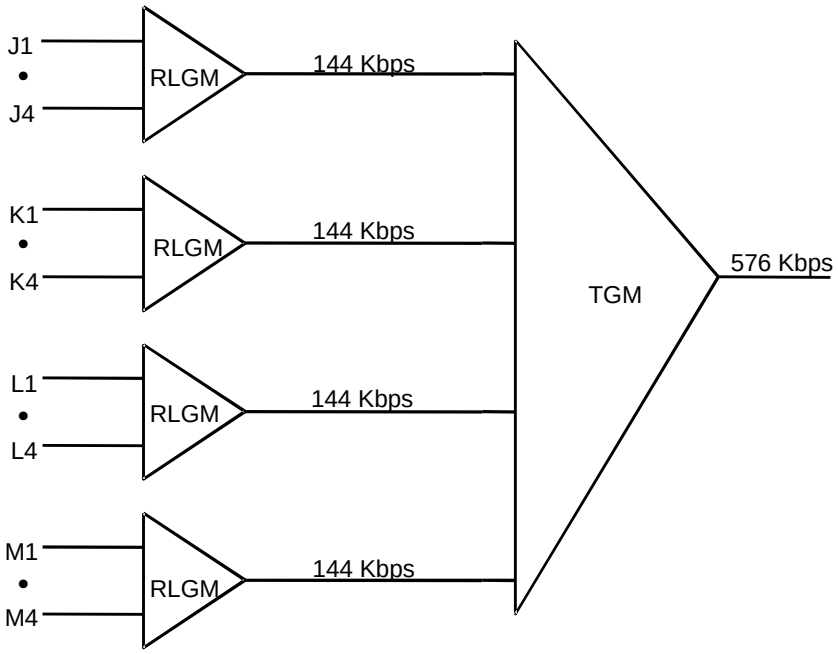

Output Channel Sequence: OH,D,J1,K1,L1,M1,J2,K2,L2,M2....J4,K4,L4,M4

Figure A-A-15. Four RLGMs into a TGM

a. Figure A-A-16 represents a system engineering plan for the example network. Two nodes, A and B, contain AN/TTC-39A(V)1 and AN/TSQ-111s, while location A is viewed as an extension node of Node A. Figure A-A-16 presents the size of each digital group, as well as the associated subgroups. Digital groups entering the AN/TTC-39(V) were set as multiples of nine channels (modulo 9) to provide maximum utilization of the NCMDs.

(1) A representation of the network in terms of digital loop groups and trunk group clusters is shown in Figure A-A-17. Two digital loop groups, A and C (15 channels each), from LGM 1 and 3 are reassigned to the AN/TTC-39(V) at Node A. The path of two other digital loop groups, B and D (also 15 channels each) from LGM 2 and LGM 4 is through the Nodes A and B CNCEs to the Node B AN/TTC-39(V). In addition, there is one trunk group cluster (TGC01) of 31 channels between the two AN/TTC-39(V)s.

(2) At the Node A CNCE, the four common signaling subchannels of A101 must be assigned to those of AB40. At the Node B CNCE, the four common signaling subchannels of BA40 must be assigned to those of B101. These channel reassignments permit the transmission of signaling information over TGC01 between the Node A and B AN/TTC-39(V)s.

(3) One peculiarity about this network is the MSF of group AX10. TGM #1 in the AN/TRC-170 at location A is set up as a Type 3B MSF group. Because group 1 of TGM 1 is composed of two groups from the AN/TSQ-146 at location A, the overhead channel from LGM 4 becomes a traffic channel (channel 3 of AX10). This channel reaches the Node A CNCE as a traffic channel. However, LGM 4 uses the seventh subchannel of this overhead channel to report hardware failure. When this channel reaches the CNCE as a traffic channel, the Automatic Digital Test (ADT) function of the CNCE cannot monitor LGM 4's dedicated subchannel because traffic channels cannot be broken down to subchannels by the CNCE. Therefore, the Node A CNCE's database was set as a type 3A3 group (overheads for channels 1, 2, 3, and 4), so that channel 3 of AX10 could be an overhead channel. This enables the ADT function to monitor LGM 4's dedicated subchannel for hardware failure.

b. <u>LGM 3 Crew Assignment Sheet</u>. After the network drawing is complete, the next step is to begin filling out the data sheets, beginning

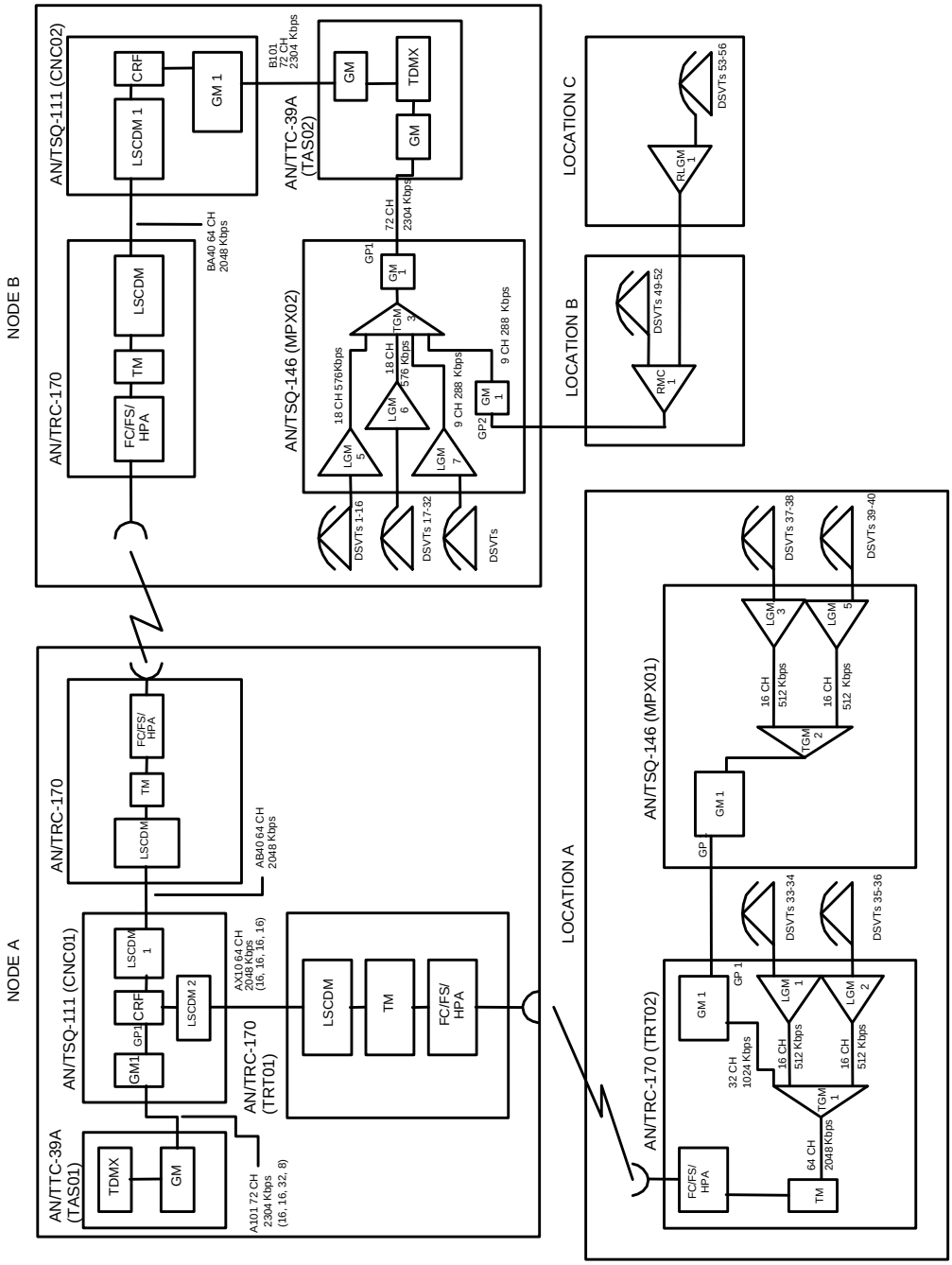

Figure A-A-16. Example Network

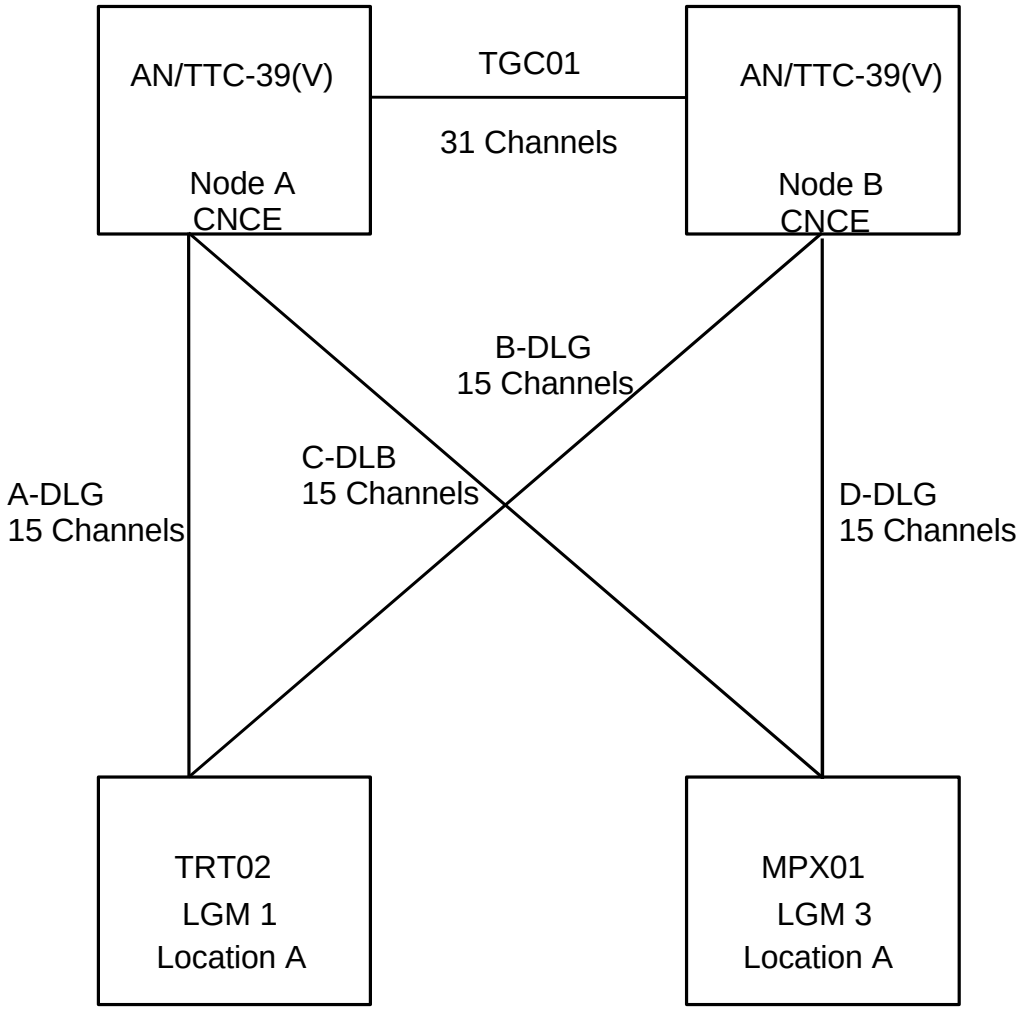

Figure A-A-17. Circuit Switch Trunk and Digital Loop Group Network

with the distant multiplexers. The first data sheet is for LGM 3. To determine the channel sequence in the group, Tables A-A-2 through A-A-5 are checked.

(1) Table A-A-2 has the channel sequence for the 512-Kbps family rates. The second line of the table has the sequence for the 512-Kbps rate. Figure A-A-18 shows the completed LGM crew assignment sheet. The time slots are numbered 1 to 16 to account for the 15 time slots in the 512-Kbps group. Because common battery power is supplied to DSVTs 37 and 38, the power from the loop modems is "ON."

(2) At the bottom of the sheet, timing is shown as being derived from the group to the TGM (loopback timing) and the group connection is shown to group 1 of TGM2.

c. LGM 4 Crew Assignment Sheet. The CAS for LGM 4 is completed next. The procedures for this CAS are the same as for LGM 3. The completed CAS is shown in Figure A-A-19.

d. TGM 2 Crew Assignment Sheet. The crew assignment sheet for TGM 2 is completed next. (See Figure A-A-20.) The frame switches for groups 1 and 2 are shown in the "YES" position. (Both groups are TRI-TAC formatted groups.) The supergroup format (for CCA slot A12) can be found by using Tables B-A-7 through B-A-9 to determine the proper MSF. Table B-A-7 shows that the MSF format for a TGM with two group inputs of 512 Kbps is a 3A1. The correct switch position for the supergroup format (found on the chart printed on the TGM crew assignment sheet) is "3." The entries for group and supergroup connections are self-explanatory.

e. TGM 2 Channel Assignment Sheet. The channel assignment sheet for TGM 2 is completed next. The particular combination of rates being used can be found on line 12 of Table B-A-7. This is a type 3A1 MSF with an output supergroup rate of 1,024 Kbps. The time slots are numbered 1 through 32. (See Figure A-A-21.) The sample sequence for the supergroup of TGM 2 can be found by using Tables A-A-4 and A-A-5. Table A-A-4 gives the sample sequence for MSF 3A1 as G1, G2. Enter the use of the time slots by group. The use of each time slot for group one is entered by referring to the LGM crew assignment sheet for LGM 3. Because of the sampling sequence, these will be entered in time slots 1, 3, 5, etc. Note that the sequence begins with the overhead channels and then proceeds with the traffic channels. The use of the channels for LGM 4 is entered in the same manner.

	ASSEMBLAGE: MPX01 (AN/TSQ-146(V)1)
LGM: 3	LOCATION: A

Notes:

1. Channel 1 is time slot 3 for 16 Kbps channels of 288 or 32 Kbps channels of 576 Kbps group. Channel 1 is time slot 2 for all other groups
2. For normal operation, set Norm/Lp switch to Norm.
3. "ON" provides DC power to terminal equipment.

HIGH GROUP DATA RATES	
POSITION	BIT RATE
2	128
3	144
4	258
5	288
6	512
7	576

AAU GAIN LEVELS		
POSITION	XMIT	RCV
1	-3 dB	+3 dB
2	0 dB	0 dB
3	+10 dB	-10 dB
4	+20 dB	-20 dB

CCA SLOT NO.	CHAN NO.	TIME SLOT NO. 1	SETTINGS				REMARKS
			ANALOG (AAU)			DIGITAL (LM)	
			XMIT GAIN	RCV GAIN	MODE 2	PWR FEED 3	(TERMINAL/SUBSCRIBER/CCSD)
A8 s	1	2	S3__(1-4)	S5__(1-4)	NORM__ LP__	ON✓ OFF__	DSVT 37
	2	3	S4__(1-4)	S6__(1-4)	NORM__ LP__	ON✓ OFF__	DSVT 38
A7	3	4	S3__(1-4)	S5__(1-4)	NORM__ LP__	ON__ OFF✓	
	4	5	S4 (1-4)	S6__(1-4)	NORM__ LP__	ON__ OFF✓	
A8	5	6	S3__(1-4)	S5__(1-4)	NORM__ LP__	ON__ OFF✓	
	6	7	S4__(1-4)	S6__(1-4)	NORM__ LP__	ON__ OFF✓	
	7	8	S3__(1-4)	S5__(1-4)	NORM__ LP__	ON__ OFF✓	
A9	8	9	S4__(1-4)	S6__(1-4)	NORM__ LP__	ON__ OFF✓	
	9	10	S3__(1-4)	S5__(1-4)	NORM__ LP__	ON__ OFF✓	
A10	10	11	S4__(1-4)	S6__(1-4)	NORM__ LP__	ON__ OFF✓	
A11	11	12	S3__(1-4)	S5__(1-4)	NORM__ LP__	ON__ OFF✓	
	12	13	S4__(1-4)	S6 (1-4)	NORM LP__	ON__ OFF✓	
	13	14	S3__(1-4)	S5__(1-4)	NORM__ LP__	ON__ OFF__ ON__ OFF✓	
A12	14	15	S4__(1-4)	S6__(1-4)	NORM__ LP__	ON__ OFF✓	
	15	16	S3__(1-4)	S5__(1-4)	NORM__ LP__	ON__ OFF✓	
A13	16		S4__(1-4)	S6__(1-4)	NORM__ LP__	ON__ OFF✓	

A5	GROUP	CHAN RATE: 32 Kbps ✓ 16 Kbps __ RATE: 6 (2-7)	
A16	GROUP	TIMING: STA CLK__ LOOP ✓	

Notes:	GROUP CONNECTIONS GM __ GP (1-4) LSCDM __ TED __ TGM 2 GP (1-4) 1

Pg. of

Figure A-A-18. LGM 3 Crew Assignment Sheet

LGM 4 :	ASSEMBLAGE: MPX01 (AN/TSQ-146(V)
	LOCATION: A

Notes:
1. Channel 1 is time slot 3 for 16 Kbps channels of 288 Kbps group or 32 Kbps channels of 576 group. Channel 1 is time slot 2 for all other groups.
2. For normal operation, set Norm/Lp switch to Norm. ON" provides DC power to terminal equipment.

HIGH GROUP DATA RATES

POSITION	BIT RATE
2	128
3	144
4	258
5	288
6	512

AAU GAIN LEVELS

POSITION	XMIT	RCV
1	-3 dB	+3 dB
2	0 dB	0 dB
3	+10 dB	-10 dB
4	+20 dB	-20 dB

CCA SLOT NO.	CHAN NO.	TIME SLOT NO. 1	SETTINGS				REMARKS
			ANALOG (AAU)			DIGITAL (LM)	
			XMIT GAIN	RCV GAIN	MODE 2	PWR FEED 3	(TERMINAL/SUBSCRIBER/CCSD)
A8	1	2	S3 __ (1-4)	S5 __ (1-4)	NORM __ LP__	ON ✓ OFF__	DSVT 39
	2	3	S4 __ (1-4)	S6 __ (1-4)	NORM __ LP__	ON ✓ OFF__	DSVT 40
	3	4	S3 __ (1-4)	S5 __ (1-4)	NORM __ LP__	ON __ OFF✓	
A7	4	5	S4 __ (1-4)	S6 __ (1-4)	NORM __ LP__	ON __ OFF✓	
	5	6	S3 __ (1-4)	S5 __ (1-4)	NORM __ LP__	ON __ OFF✓	
A8	6	7	S4 __ (1-4)	S6__ (1-4)	NORM __ LP__	ON __ OFF✓	
A9	7	8	S3 __ (1-4)	S5__ (1-4)	NORM __ LP__	ON __ OFF✓	
	8	9	S4 __ (1-4)	S6 __ (1-4)	NORM __ LP__	ON __ OFF✓	
	9	10	S3 __ (1-4)	S5 __ (1-4)	NORM __ LP__	ON __ OFF✓	
A10	10	11	S4 __ (1-4)	S6 __ (1-4)	NORM __ LP__	ON __ OFF✓	
	11	12	S3 __ (1-4)	S5 __ (1-4)	NORM __ LP__	ON __ OFF✓	
A11	12	13	S4 __ (1-4)	S6 __ (1-4)	NORM __ LP__	ON __ OFF✓	
	13	14	S3 __ (1-4)	S5 __ (1-4)	NORM __ LP__	ON __ OFF✓	
A12	14	15	S4 __ (1-4)	S6 __ (1-4)	NORM __ LP__	ON __ OFF✓	
	15	16	S3 __ (1-4)	S5 __ (1-4)	NORM __ LP__	ON __ OFF✓	
A13	16		S4 __ (1-4)	S6 __ (1-4)	NORM __ LP__	ON __ OFF✓	
A5		GROUP		CHAN RATE: Kbps 32 ✓		Kbps 16 __	
A16		GROUP		TIMING: STA CLK __ LOOP ✓			

Notes:

GROUP CONNECTIONS

GM __ GP (1-4) __
LSCDM __
TED __
TGM 2 GP (1-4) 2

Pg. of

Figure A-A-19. LGM 4 Crew Assignment Sheet

TGM: 2	ASSEMBLAGE: MPX01 (AN/TSQ-146(V))
	LOCATION: A

NOTES:

1. Starred data rates non applicable To supergroup.
2. Double starred data rates non applicable to groups.

GROUP/SUPERGROUP DATA RATES

POSITION	BIT RATE	POSITION	BIT RATE
*0	OFF	8	1024
*1	72	9	1152
2	128	10	1536
3	144	11	2048
4	256	12	2304
5	288	** 13	4096
6	512	** 14	4608
7	576	__	__

SUPERGROUP FRAME FORMATS

POSITION	FORMAT	RATIO
0	3C	4:2:1:1
1	3B	2:1:1
2	3A3	1:1:1:1
3	3A1	1:1
4	3A2	1:1:1
5	D1	4 RLGMS
6	D2	2 RLGMS
7	SG	SINGLE GROUP

CCA SLOT NO.	GROUP		SETTINGS
A5	1	FRAME: RATE:	YES ✓ NO __ 6 (0-12)
A6	2	FRAME: RATE:	YES ✓ NO __ 6 (0-12)
A7	3	FRAME: RATE:	YES ✓ NO __ __ (0-12)
A8	4	FRAME: RATE:	YES ✓ NO __ __ (0-12)
A9	SUPER	TMG:	STA CLK __ LOOP ✓
A10	SUPER	RATE:	8 (2-14)
A12	SUPER	CHAN RATE: FORMAT:	32 kbps __ 16 kbps __ 3 (0-7)

GROUP/SUPERGROUP CONN

GROUP 1

GM ____ GP (1-4,SG)
LSCDM ____
TED ____
LGM 3
TGM ____ GP (1-4)

Group 2

GM ____ GP (1-4)
LSCDM ____
TED ____ GP (1-4,SG)
LGM 4
TGM ____

Group 3

GM ____ GP (1-4)
LSCDM ____
TED ____ GP (1-4,SG)
LGM ____
TGM ____

SUPERGROUP

GM 1 GP (1-4)
LSCDM ____
TED ____ GP (1-4,SG)
LGM ____
TGM ____

Notes:

GP1-LGM3

GP2-LGM4

Pg. of

Figure A-A-20. TGM 2 Crew Assignment Sheet

Equipment ID: TGM 2				
Location: MPX01 (AN/TSQ-164(V), Location A)				
High Speed Termination		AN/TRC-170 Through GM 1, GP 1		
Low Speed Termination (TGM & RMC)		GP 1 GP 2 (TGM only) GP 3 (TGM only) GP 4 (TGM only)		LGM 3 LGM 4
High Speed Time Slot	Low Speed Time Slot	Low Speed Time Slot or NCMD CHNL	CCSD	Use/Remarks
1	1	1		OH (From LGM 3)
2	2	1		OH (From LGM 4)
3	1	2		DSVT 37
4	2	2		DSVT 39
5	1	3		DSVT 38
6	2	3		DSVT 40
7	1	4		Spare
8	2	4		Spare
•	•	•		Spare
•	•	•		Spare
•	•	•		Spare
31	1	16		Spare
32	2	16		Spare

Pg. of

Figure A-A-21. TGM 2 Channel Assignment Sheet

f. LGM 1 Crew Assignment Sheet. The crew assignment sheet for LGM 1 is the next one to be filled in. (See Figure A-A-22.)

g. LGM 2 Crew Assignment Sheet. Figure A-A-23 shows the crew assignment sheet for LGM 2.

h. TGM 1 Crew Assignment Sheet. The crew assignment sheet for TGM 1 is completed next. (See Figure A-A-24.) The frame switches are shown in the "Yes" position. (The three groups are TRI-TAC formatted groups.) The supergroup format (for CCA slot A12) is found by checking Tables B-7 through B-9 to determine the proper MSF. Table B-7 gives the format for a TGM with group inputs of 1,024, 512, and 512 Kbps as 3B. The correct switch position for the supergroup format (found on the chart printed on the TGM crew assignment sheet) is "1." The entries for group connections are self-explanatory. The entries for the TGM supergroup connections are not applicable to AN/TRC-170.

i. TGM 1 Channel Assignment Sheet

(1) The channel assignment sheet for TGM 1 is completed next. The particular combination of rates being used is found on line seven of Table B-7. This is a type 3B MSF with an output supergroup rate of 2,048 Kbps. The time slots are numbered 1 through 64. (See Figure A-A-25.)

(2) The sample sequence for the supergroup of TGM 1 is found by checking Tables A-A-4 and A-A-5. Table A-A-4 gives the sample sequence for MSF 3B as G1, G2, G1, G3. It is usually easiest to enter the use of the time slots by group. Enter the use of each time slot for group one by referring to the TGM 2 channel assignment sheet. The first channel (overhead from LGM 3) of TGM 2 becomes the primary overhead channel of TGM 1. The second channel of TGM 2 becomes channel three of TGM 1. Note that this channel is identified as an overhead in the TGM2 channel assignment sheet but would not normally be identified as an overhead in the TGM 2 channel assignment sheet. Unless this channel is carried over as an overhead, the ADT subchannel of LGM 4 will be lost. (See previous discussion in subparagraph 3a(a) above). So as not to lose this subchannel, the third channel of TGM 1 will be identified as an overhead. The users for the remainder of the channels for group one are entered in the normal manner. For groups two and three, refer to the crew assignment sheets for LGM 1 and LGM

LGM: 1	ASSEMBLAGE: TRT02 (AN/TRC-170)
	LOCATION: A

Notes:

1. Channel 1 is time slot 3 for 16 Kbps channels of 288 Kbps group; or 32 Kbps channels of 576 Kbps group Channel 1 is time slot 2 for all other groups.
2. For normal operation, set Norm/ Lp switch to Norm.
3. "ON" provides DC power to terminal equipment.

HIGH GROUP DATA RATES

POSITION	BIT RATE
2	128
3	144
4	258
5	288
6	512
7	576

AAU GAIN LEVELS

POSITION	XMIT	RCV
1	-3 dB	+3 dB
2	0 dB	0 dB
3	+10 dB	-10 dB
4	+20 dB	-20 dB

CCA SLOT NO.	CHAN NO.	TIME SLOT NO. 1	SETTINGS XMIT GAIN	ANALOG (AAU) RCV GAIN	MODE 2	DIGITAL (LM) PWR FEED 3	REMARKS7 (TERMINAL/SUBSCRIBER/CCSD)
A6	1	2	S3 —(1-4)	S5 —(1-4)	NORM —LP —	ON ✓ OFF —	DSVT 33
	2	3	S4 —(1-4)	S6 —(1-4)	NORM —LP —	ON ✓ OFF —	DSVT 34
A7	3	4	S3 —(1-4)	S5 —(1-4)	NORM —LP —	ON — OFF ✓	
	4	5	S4 —(1-4)	S6 —(1-4)	NORM —LP —	ON — OFF ✓	
A8	5	6	S3 —(1-4)	S5 —(1-4)	NORM LP	ON — OFF ✓	
	6	7	S4 (1-4)	S6 (1-4)	NORM —LP —	ON — OFF ✓	
A9	7	8	S3 (1-4)	S5 (1-4)	NORM LP	ON OFF ✓	
	8	9	S4 —(1-4)	S6 (1-4)	NORM —LP —	ON — OFF ✓	
A10	9	10	S3 —(1-4)	S5 —(1-4)	NORM —LP —	ON — OFF ✓	
	10	11	S4 —(1-4)	S6 —(1-4)	NORM —LP —	ON — OFF ✓	
A11	11	12	S3 (1-4)	S5 (1-4)	NORM LP	ON — OFF ✓	
	12	13	S4 —(1-4)	S6 —(1-4)	NORM —LP —	ON — OFF ✓	
A12	13	14	S3 —(1-4)	S5 —(1-4)	NORM —LP —	ON — OFF ✓	
	14	15	S4 —(1-4)	S6 —(1-4)	NORM —LP —	ON — OFF ✓	
A13	15	16	S3 —(1-4)	S5 —(1-4)	NORM —LP —	ON — OFF ✓	
	16		S4 —(1-4)	S6 —(1-4)	NORM —LP —	ON — OFF ✓	
A5	GROUP		CHAN RATE : 32 Kbps ✓ 16 Kbps ___ RATE: 6 (2-7)				
A16	GROUP		TIMING: STA CLK LOOP ✓				

NOTES:

GROUP CONNECTIONS

GM — GP (1-4) —
LSCDM —
TED —
TGM 1 GP (1-4) 2

Pg. of

Figure A-A-22. LGM 1 Crew Assignment Sheet

LGM: 2	ASSEMBLAGE: TRT02 (AN/TRC-170)
	LOCATION: A

Notes:

1. Channel 1 is time slot 3 for 16 Kbps channels of 288 Kbps group; or 32 channels of 576 Kbps group Channel 1 is time slot 2 for all other groups.
2. For normal operation, set Norm/Lp switch to Norm. "ON" provides DC power to terminal equipment.

HIGH GROUP DATA RATES

POSITION	BIT RATE
2	128
3	144
4	268
5	288
6	512
7	676

AAU GAIN LEVELS

POSITION	XMIT	RCV
1	- 3 dB	+ 3 dB
2	0 dB	0 dB
3	+ 10 dB	- 10 dB
4	+ 20 dB	- 20 dB

SETTINGS							REMARKS
NO.	CHAN 6	TIME SLOT NO. 1	XMIT GAIN	ANALOG (AAU) RCV GAIN	MODE 2	DIGITAL (LM) PWR FEED 3	(TERMINAL/SUBSCRIBER/CCSD)
A6	1	2	S3 __(1-4)	S5 __(1-4)	NORM __LP __	ON ✓ OFF __	DSVT 35
	2	3	S4 __(1-4)	S6 __(1-4)	NORM __LP __	ON ✓ OFF __	DSVT 36
A7	3	4	S3 __(1-4)	S5 __(1-4)	NORM __LP __	ON __ OFF ✓	
	4	5	S4 __(1-4)	S6 __(1-4)	NORM __LP __	ON __ OFF ✓	
A8	5	6	S3 __(1-4)	S5 __(1-4)	NORM __LP __	ON __ OFF ✓	
	6	7	S4 __(1-4)	S6 __(1-4)	NORM __LP __	ON __ OFF ✓	
A9	7	8	S3 __(1-4)	S5 __(1-4)	NORM __LP __	ON __ OFF ✓	
	8	9	S4 __(1-4)	S6 __(1-4)	NORM __LP __	ON __ OFF ✓	
A10	9	10	S3 __(1-4)	S5 __(1-4)	NORM __LP __	ON __ OFF ✓	
	10	11	S4 __(1-4)	S6 __(1-4)	NORM __LP __	ON __ OFF ✓	
A11	11	12	S3 __(1-4)	S5 __(1-4)	NORM __LP __	ON __ OFF ✓	
	12	13	S4 __(1-4)	S6 __(1-4)	NORM __LP __	ON __ OFF ✓	
A12	13	14	S3 __(1-4)	S5 __(1-4)	NORM __LP __	ON __ OFF ✓	
	14	15	S4 __(1-4)	S6 __(1-4)	NORM __LP __	ON __ OFF ✓	
A13	15	16	S3 __(1-4)	S5 __(1-4)	NORM __LP __	ON __ OFF ✓	
	16		S4 __(1-4)	S6 __(1-4)	NORM __LP __	ON __ OFF ✓	
A5	GROUP		CHAN RATE: 32 Kbps ✓ 16 Kbps ____ RATE: 6 (2-7)				
A16	GROUP		TIMING: __ STA CLK ____ LOOP ✓				

Notes:

GROUP CONNECTIONS

GM ____ GP (1-4) ____
LSCDM ____
TED ____
TGM 1 GP (1-4) 3

Pg. of

Figure A-A-23. LGM 2 Crew Assignment Sheet

TGM: 1	Assemblage: TRT02 (AN/TRC-170) Location: A

Notes:

1/ Data rates nonapplicable to supergroup

2/ Data rates nonapplicable to groups.

Group/Supergroup Data Rates				Supergroup Frame Formats		
Position	Bit Rate	Position	Bit Rate	Position	Format	Ratio
0 1/	Off	8	1024	0	3C	4:2:1:1
1 1/	72	9	1152	1	3B	2:1:1
2	128	10	1536	2	3A3	1:1:1:1
3	144	11	2048	3	3A1	1:1
4	256	12	2304	4	3A2	1:1:1
5	288	13 2/	4096	5	D1	4 RLGMs
6	512	14 2/	4608	6	D2	2 RLGMs
7	576	-	-	7	SG	Single

CCA Slot No.	Group	Settings	Group/Supergroup Connections
A5	1	Frame: Yes √ No ___ Rate: 8 (0-12)	Group 1 GM 1 GP(1-4) 1 LSCDM ___ TED ___ LGM ___ TGM GP(1-4,SG) ___
A6	2	Frame: Yes √ No ___ Rate: 6 (0-12)	Group 2 GP(1-4) GM ___ LSCDM ___ TED ___ LGM 1 TGM GP(1-4,SG) ___
A7	3	Frame: Yes √ No ___ Rate: 6 (0-12)	Group 3 GP(1-4) GM ___ LSCDM ___ TED 2 LGM ___ TGM GP(1-4,SG) ___
A8	4	Frame: Yes ___ No ___ Rate: ___ (0-12)	Group 4 GP(1-4) GM ___ LSCDM ___ TED ___ LGM ___ TGM GP(1-4,SG) ___
A9	Super	TGM: STA CLK ___ Loop √	Supergroup GP(1-4) GM ___ LSCDM ___ TED ___ LGM ___ TGM ✓ GP(1-4,SG) ___
A10	Super	Rate: 11 (2-14)	
A12	Super	Chan Rate: 32 Kbps √ 16 Kbps ___ Format: 1 (0-7)	

NOTES:

GP 1- TGM 2 through GM 1, GP 1; GP 2- LGM 1; GP 3- LGM 2

Pg. of

Figure A-A-24. TGM 1 Crew Assignment Sheet

Equipment ID: TGM 1				
Location: TRT02 (AN/TRC-170 (V), Location A)				
High Speed Termination		Node A Through AN/TRC-170 Shot		
Low Speed Termination (TGM & RMC)		GP 1		TGM2 Through GM1,GP1
		GP 2 (TGM only)		LGM 1
		GP 3 (TGM only)		LGM 2
		GP 4 (TGM only)		
High Speed Time Slot	Low Speed Time Slot	Low Speed Time Slot or NCMD CHNL	CCSD	Use/ Remarks
1	1	1		OH (From LGM3)
2	2	1		OH (From LGM 1)
3	1	1		OH (From LGM 4)
4	3	1		OH (From LGM 2)
5	1	2		DSVT 37
6	2	2		DSVT 33
7	1	2		DSVT 39
8	3	2		DSVT 35
9	1	3		DSVT 38
10	2	3		DSVT 34
11	1	3		DSVT 40
12	3	3		DSVT 36
13	1	4		Spare
14	2	4		Spare
•	•	•		Spare
64	3	16		Spare

Pg. of

Figure A-A-25. TGM 1 Channel Assignment Sheet

2, respectively. With one exception, the channel assignments for TGM 1 follow the normal type 3B format (G1, G2, G1, G3, etc.).

j. Node A AN/TTC-39(V) Channel Assignment Sheet. Figure A-A-16 shows that group A101 to the AN/TTC-39(V) is a 72-channel group with four subgroups (therefore, four overhead channels). Once the planner has identified the overall network scheme (reference paragraph 3 and Figure A-A-17), the channel assignment sheet for the Node A AN/TTC-39A(V)1 may be filled in.

(1) The four subgroups of A101 are associated with the two digital loop groups from AX10 and one trunk group cluster from AB40, with one spare subgroup for flexibility. The MSF format is type 4A. (Note that the digital loop groups do not require overhead channels, but it is not wrong to include them.)

(2) Figure A-A-26 is the channel assignment sheet for the Node A AN/TTC-39(V). The time slots have been numbered 1 through 72. The first nine time slots are assigned to NCMD 8, the second nine to NCMD 9, etc. After the four overhead channels, the next 15 channels are from the digital loop group of LGM 3, the next 15 are from LGM 1's digital loop group, the next 31 are the trunk group cluster to Node B, and the final seven are spares.

k. Node A CNCE Crew Assignment Sheet. Once all of the planning sheets for location A are completed, the sheets for Node A are completed next. Figure A-A-27 presents the crew assignment sheet for the CNCE at Node A. The top portion of the figure contains general information for each CNCE. The major portion of the figure is used to specify information for each digital group entering or leaving the CRF. The RED IDF PATCH ID column is filled in following the database process as it identifies the physical location of the digital group; the planner need not be concerned with this column. The group communications transmission identifier (CTID) is entered next, along with the size and MSF of the group. For group A101, the channel assignment sheet for the Node A AN/TTC-39A(V)1 is referenced. For group AX10, the channel assignment sheet for TGM 1 is referenced. Because the third channel was changed to an overhead in the TGM 1 channel assignment sheet, this group appears to be a Type 3A3 MSF to the CNCE. Group AB40 has one overhead channel (type 1 MSF), because only one is required. The equipment connectivity column specifies the path of both the internal and external CNCE equipment associated with the group. For each

Equipment ID: TAS01 (AN/TTC-39(V))				
Location: Node A				
High Speed Termination				
Low Speed Termination (TGM & RMC)		GP 1		
		GP 2 (TGM only)		
		GP 3 (TGM only)		
		GP 4 (TGM only)		
High Speed Time Slot	Low Speed Time Slot	Low Speed Time Slot or NCMD CHNL	CCSD	Use/ Remarks
1	8	1		OH (From LGM 3)
2	8	2		OH (From LGM 1)
3	8	3		OH (From TGC 01)
4	8	4		OH (Extra-For Flexibility)
5	8	5		DSVT 37(From LGM 3)
6	8	6		DSVT 38(From LGM 3)
7	8	7		Spare (From LGM 3)
8	8	8		"
9	8	9		"
10	9	1		"
.	.	.		"
19	10	1		Spare (From LGM 3)
20	10	2		DSVT 33 (From LGM 1)
21	10	3		DSVT 34 (From LGM 1)
22	10	4		Spare (From LGM 1)
23	10	5		"

Pg. of

Figure A-A-26. Node A AN/TTC-39(V) Channel Assignment Sheet

Equipment ID: TAS01 (AN/TTC-39(V))				
Location: Node A				
High Speed Termination Low Speed Termination (TGM & RMC)		GP 1		
		GP 2 (TGM only)		
		GP 3 (TGM only)		
		GP 4 (TGM only)		
High Speed Time Slot	Low Speed Time Slot	Low Speed Time Slot or NCMD CHNL	CCSD	Use/Remarks
24	10	6		Spare (From LGM 1)
•	•	•		"
•	•	•		"
34	11			Spare (From LGM 1)
35	11	8		Traffic (TGC01 Trunk 1)
36	11	9		Spare
•	•	•		"
•	•	•		"
•	•	•		"
64	15	1		"
65	15	2		Traffic (TGC01, Trunk 31)
66	15	3		Spare
67	5	4		Spare
•	•	•		"
72	15	9		"

Pg. of

Figure A-A-26. (Cont d)

Node: A

CNCE Type: IIIB

Equipment ID: CNC01

System Rate (32 or 16 Kbps): 32 Kbps

Red IDF Patch ID	Group CTID	Group Size (Chans)	MSF Type	Equipment	Chan Rate (16,32,MX)
	A101	72	4A	TED01	32
				GMX01	
				TAS01	
	AX10	64	3A3	TED02	32
				CDL02	
				TRT01	
				TRT02	
				TGM01	
				LGM01	
				LGM02	
				MPV01	
				TGM02	
				LGM03	
				LGM04	
	AB40	64	1	TED03	32
				CDL01	

Pg. of

Figure A-A-27. Node A CNCE Crew Assignment Sheet

group, the internal CNCE equipment, beginning with the CRF, is entered. Then the external equipment is entered, by equipment ID previously specified by the planner. In each transmission assemblage with multiplexer equipment in the group path, the assemblage is listed first, followed by each multiplexer, prior to entering the next transmission assemblage. The final column specifies the channel rate; MX is used for type 4B groups that consist of both 16 Kbps and 32 Kbps channels.

l. Node A CNCE Channel Assignment Sheet. One set of CNCE channel assignment sheets (Figure A-A-28) is filled in for each digital group listed on the Node A CNCE crew assignment sheet. The DESTIN CTID column is filled in first, listing each channel in order. For overhead channels, the SOURCE CTID column is a duplicate of the DESTIN CTID column. For all other channels, the SOURCE CTID column lists the SOURCE CTID column blank. The control communications service designator (CCSD) is a unique circuit identifier that identifies a circuit throughout the network. Annex A to Appendix A to Enclosure B outlines the multiplexing scheme associated with each MSF type. In the type 4A group of A101; and the type 3A3 group of AX10, the first four channels are overheads, each one associated with a subgroup. For the type 1 group of AB40, the first channel is the overhead channel. Digital loop groups A and C (15 each) channels are assigned between AX10 and A101, digital loop groups B and D (15 each) channels are assigned between AX10 and AB40; and trunk group cluster 1 (31 channels) is assigned between A101 and AB40.

m. Loop Group Multiplexer (LGM) 5 Crew Assignment Sheet. Upon completion of the Node A planning sheets, the Node B sheets may be generated. The data sheets associated with the AN/TSQ-146 at Node B are filled in, beginning with the distant multiplexers. The first data sheet is for LGM 5. To determine the channel sequence in the group, Tables A-A-2 through A-A-4 are used. Table A-A-3 has the channel sequence for the 576-Kbps family rates. The second line of the table has the sequence for the 576-Kbps rate being used. Figure A-A-29 shows the completed LGM crew assignment sheet. The time slots are numbered 1 to 18 to account for the 18 time slots in the 576-Kbps group. Note that the numbering on the sheet begins in the top time slot block. This is consistent with note one. As shown in Table A-A-3, the second time slot is a dummy channel, and the third time slot is traffic channel one. The other traffic channels follow in sequence. Because common battery power is being supplied to the DSVTs, the power from the loop modems is "ON." The DSVTs (1-16) are listed in the remarks column. At the bottom of the sheet, timing is shown as being derived from the group to

Group CTID: A101			
No. Channels: 72			MSF Type: 4A
Source CTID	Destination CTID	CCSD	Use/Remarks
A101001	A101001	YBFJB300	OH-Primary (LGM3)
A101002	A101002	YBFJB100	OH-Suppressed (LGM1)
A101003	A101003	YBFPD000	OH-Suppressed (TGC01)
A101004	A101004	YSSVY000	OH-Suppressed
			(Extra- For Flexibility)
AX10005	A101005	YBFJB301	DSVT 37 (From LGM3)
AX10009	A101006	YBFJB302	DSVT 38 (From LGM3)
AX10013	A101007	YBFJB303	Unused (From LGM3)
AX10017	A101008	YBFJB304	"
AX10021	A101009	YBFJB305	"
•	•	•	"
•	•	•	"
AX10061	A101019	YBFJB315	Unused (From LGM3)
AX10006	A101020	YBFJB101	DSVT 33 (From LGM1)
AX10010	A101021	YBFJB102	DSVT 34 (From LGM1)
AX10014	A101022	YBFJB103	Unused (From LGM1)
AX10018	A101023	YBFJB105	"
AX10022	A101024	YBFJB105	"
AX10026	A101025	YBFJB106	Unused (From LGM1)

Pg. of

Figure A-A-28. Node A CNCE Channel Assignment Sheet

Group CTID: A101			
No. Channels: 72			MSF Type: 4A
Source CTID	Destination CTID	CCSD	Use/Remarks
AX10030	A101026	YBFJB107	Unused (From LGM1)
•	•		"
•	•		"
AX10062	A101034	YBFJB115	Unused (From LGM1)
AB40034	A101035	JBFPD001	Traffic (TGC01,Trunk 1)
AB40035	A101036	JBFPD002	Traffic (TGC01,Trunk 2)
AB40036	A101037	JBFPD003	Traffic (TGC01,Trunk 3)
•	•	•	"
•	•	•	"
AB40064	A101065	JBFPD031	Traffic (TGC01,Trunk 31)
	A101066	YSSVY001	Spare
	A101067	YSSVY002	Spare
	•	•	"
	•	•	"
	A101072	YSSVY007	Spare

Pg. of

Figure A-A-28. (Cont'd)

Group CTID: AX10

No. Channels: 64 MSF Type: 3A3

Source CTID	Destination CTID	CCSD	Use/Remarks
AX10001	AX10001	YBFJB300	OH- Primary(From LGM3)
AX10002	AX10002	YBFJB100	OH-Suppressed(From LGM1)
AX10003	AX10003	YBFJB400	OH-Suppressed(From LGM4)
AX10004	AX10004	YBFJB200	OH-Suppressed(From LGM2)
A101005	AX10005	YBFJB301	DSVT 37 (From LGM3)
A101020	AX10006	YBFJB101	DSVT 33 (From LGM1)
AB40004	AX10007	YBFJB401	DSVT 39 (From LGM4)
AB40019	AX10008	YBFJB201	DSVT 35 (From LGM2)
A101006	AX10009	YBFJB302	DSVT 38 (From LGM3)
A101021	AX10010	YBFJB102	DSVT 34 (From LGM 1)
AB40005	AX10011	YBFJB402	DSVT 40 (From LGM 4)
AB40020	AX10012	YBFJB202	DSVT 36 (From LGM 2)
A101007	AX10013	YBFJB303	Unused (From LGM 3)
A101022	AX10014	YBFJB103	Unused (From LGM 1)
AB40006	AX10015	YBFJB403	Unused (From LGM 4)
AB40021	AX10016	YBFJB203	Unused (From LGM 2)
A101008	AX10017	YBFJB304	Unused (From LGM 3)
A101023	AX10018	YBFJB104	Unused (From LGM 1)
AB40007	AX10019	YBFJB404	Unused (From LGM 4)

Pg. of

Figure A-A-28. (Cont'd)

Group CTID: AX10			
No. Channels: 64			MSF Type: 3A3
Source CTID	Destination CTID	CCSD	Use/Remarks
AB40022	AX10020	YBFJB204	Unused (From LGM 2)
•	•	•	•
•	•	•	•
A101019	AX10061	YBFJB315	Unused (From LGM 3)
A101034	AX10062	YBFJB115	Unused (From LGM 1)
AB40018	AX10063	YBFJB415	Unused (From LGM 4)
AB40033	AX10064	YBFJB215	Unused (From LGM 2)

Pg . of

Figure A-A-28. (Cont'd)

Group CTID: AB40			
No. Channels: 64			MSF Type: 1
Source CTID	Destination CTID	CCSD	Use/Remarks
AB40001	AB40001	JBFPD000	OH-Primary
	AB40002	UBGDU001	Spare
	AB40003	UBGDU002	Spare
AX10007	AB40004	YBFJB401	DSVT 39 (From LGM 4)
AX10011	AB40005	YBFJB402	DSVT 40 (From LGM 4)
AX10015	AB40006	YBFJB403	Unused (From LGM 4)
AX10019	AB40007	YBFJB404	"
AX10023	AB40008	YBFJB405	"
•	•	•	"
•	•	•	"
AX10063	AB40018	YBFJB415	Unused (From LGM 4)
AX10008	AB40019	YBFJB201	DSVT 35 (From LGM 2)
AX10012	AB40020	YBFJB202	DSVT 35 (From LGM 2)
AX10016	AB40021	YBFJB203	Unused (From LGM 2)
AX10020	AB40022	YBFJB204	"
AX10024	AB40023	YBFJB205	"
•	•	•	"
AX10064	AB40033	YBFJB215	Unused (From LGM2)

Pg. of

Figure A-A-28. (Cont'd)

Group CTID: AB40			
No. Channels: 64			MSF Type: 1
Source CTID	Destination CTID	CCSD	Use/Remarks
A101035	AB40034	JBFPD001	Traffic (TGC01, Trunk1)
A101306	AB40035	JBFPD002	Traffic (TGC01, Trunk2)
•	•	•	"
•	•	•	"
A101065	AB40064	JBFPD031	Traffic (TGC01, Trunk 31)

Pg. of

Figure A-A-28. (Cont'd)

LGM: 5	ASSEMBLAGE: MPX02 (AN/TRC- 146(V)) LOCATION: NODE B

Notes:
1. Channel 1 is time slot 3 for 16 Kbps channels of channels of 288 Kbps group; or 32 Kbps channels of 576 Kbps group. Channel 1 time slot 2 for all other groups.
2. For normal operation, set Norm/ Lp switch to Norm.
3. "ON" provides DC power to terminal equipment.

HIGH GROUP DATA RATES

POSITION	BIT RATE
2	128
3	144
4	258
5	288
6	512
7	576

AAU GAIN LEVELS

POSITION	XMIT	RCV
1	-3 dB	+3 dB
2	0 dB	0 dB
3	+10 dB	-10 dB
4	+20 dB	-20 dB

CCA SLOT NO.	CHAN NO.	TIME SLOT NO. 1	XMIT GAIN	SETTINGS: ANALOG (AAU) RCV GAIN	SETTINGS: ANALOG (AAU) MODE 2	SETTINGS: DIGITAL (LM) PWR FEED 3	REMARKS (TERMINAL/SUBSCRIBER/CCSD)
A6	1	3	S3_(1-4)	S5_(1-4)	NORM – LP–	ON✓ OFF—	DSVT 17
	2	4	S4_(1-4)	S6_(1-4)	NORM LP	ON✓ OFF—	DSVT 18
A7	3	5	S3_(1-4)	S5_(1-4)	NORM LP	ON✓ OFF—	DSVT 19
	4	6	S4_(1-4)	S6_(1-4)	NORM LP	ON✓ OFF—	DSVT 20
A8	5	7	S3_(1-4)	S5_(1-4)	NORM LP	ON✓ OFF—	DSVT 21
	6	8	S4_(1-4)	S6_(1-4)	NORM_ LP	ON✓ OFF—	DSVT 22
A9	7	9	S3_(1-4)	S5_(1-4)	NORM_ LP_	ON✓ OFF—	DSVT 23
	8	10	S4_(1-4)	S6_(1-4)	NORM_ LP_	ON✓ OFF—	DSVT 24
A10	9	11	S3_(1-4)	S5_(1-4)	NORM_ LP_	ON✓ OFF—	DSVT 25
	10	12	S4_(1-4)	S6_(1-4)	NORM LP	ON✓ OFF—	DSVT 26
A11	11	13	S3_(1-4)	S5_(1-4)	NORM – LP–	ON✓ OFF—	DSVT 27
	12	14	S4_(1-4)	S6_(1-4)	NORM – LP–	ON✓ OFF—	DSVT 28
A12	13	15	S3_(1-4)	S5_(1-4)	NORM LP	ON✓ OFF—	DSVT 29
	14	16	S4_(1-4)	S6_(1-4)	NORM – LP–	ON✓ OFF—	DSVT 30
A13	15	17	S3_(1-4)	S5_(1-4)	NORM_ LP	ON✓ OFF—	DSVT 31
	16	18	S4_(1-4)	S6_(1-4)	NORM _ LP	ON✓ OFF—	DSVT 32
A5	GROUP		CHAN RATE : 32 Kbps ✓ 16 Kbps				
A16	GROUP		TIMING: STA CLK__ LOOP✓				

NOTES:

GROUP CONNECTIONS

GM ___ GP (1-4) ___
LSCDM ___
TED
TGM 3 GP (1-4) 1

Pg. of

Figure A-A-29. LGM 5 Crew Assignment Sheet

LGM:6	ASSEMBLAGE: MPX02 (AN/TRC-146(V))
	LOCATION: NODE B

Notes:

1. Channel 1 is time slot 3 for 16 Kbps channels of 288 Kbps group; or 32 channels of 576 Kbps group. Channel 1 is time slot 2 for all other Group.
2. For normal operation, set Norm/LP switch to Norm
3. " ON" provides DC power to terminal equipment.

HIGH GROUP DATA RATES	
POSITION	BIT RATE
2	128
3	144
4	258
5	288
6	512
7	576

AAU GAIN LEVELS		
POSITION	XMIT	RCV
1	-3 dB	+3 dB
2	0 dB	0 dB
3	+10 dB	-10 dB
4	+20 dB	-20 dB

CCA SLOT NO.	CHAN NO.	TIME SLOT NO. 1	SETTINGS				REMARKS
			ANALOG (AAU)			DIGITAL (LM)	
			XMIT GAIN	RCV GAIN	MODE 2	PWR FEED 3	(TERMINAL/SUBSCRIBER/CCSD)
A6	1	3	S3 — (1-4)	S5 — (1-4)	NORM — LP —	ON ✓ OFF —	DSVT 17
	2	4	S4 — (1-4)	S6 — (1-4)	NORM — LP —	ON ✓ OFF —	DSVT 18
A7	3	5	S3 — (1-4)	S5 — (1-4)	NORM — LP —	ON ✓ OFF —	DSVT 19
	4	6	S4 — (1-4)	S6 — (1-4)	NORM — LP —	ON ✓ OFF —	DSVT 20
A8	5	7	S3 — (1-4)	S5 — (1-4)	NORM — LP —	ON ✓ OFF —	DSVT 21
	6	8	S4 — (1-4)	S6 — (1-4)	NORM — LP —	ON ✓ OFF —	DSVT 22
A9	7	9	S3 — (1-4)	S5 — (1-4)	NORM — LP —	ON ✓ OFF —	DSVT 23
	8	10	S4 — (1-4)	S6 — (1-4)	NORM — LP —	ON ✓ OFF —	DSVT 24
A10	9	11	S3 — (1-4)	S5 — (1-4)	NORM — LP —	ON ✓ OFF —	DSVT 25
	10	12	S4 — (1-4)	S6 — (1-4)	NORM — LP —	ON ✓ OFF —	DSVT 26
A11	11	13	S3 — (1-4)	S5 — (1-4)	NORM — LP —	ON ✓ OFF —	DSVT 27
	12	14	S4 — (1-4)	S6 — (1-4)	NORM — LP —	ON ✓ OFF —	DSVT 28
A12	13	15	S3 — (1-4)	S5 — (1-4)	NORM — LP —	ON ✓ OFF —	DSVT 29
	14	16	S4 — (1-4)	S6 — (1-4)	NORM — LP —	ON ✓ OFF —	DSVT 30
A13	15	17	S3 — (1-4)	S5 — (1-4)	NORM — LP —	ON ✓ OFF —	DSVT 31
	16	18	S4 — (1-4)	S6 — (1-4)	NORM — LP —	ON ✓ OFF —	DSVT 32
A5		GROUP	CHAN RATE 32 Kbps ✓ 16 Kbps				
A16		GROUP	TIMING: STA CLK ___		LOOP ✓		

NOTES:

GROUP CONNECTIONS

GM ___ GP (1-4) ___
LSCDM ___
TED ___

Pg. of

Figure A-A-30. LGM 6 Crew Assignment Sheet

the TGM (loopback timing), and the group connection is shown to group 1 of TGM 1.

n. LGM 6 Crew Assignment Sheet. The data sheet for LGM 6 is completed next. The procedures for filling out this data sheet are the same as for LGM 5. The completed sheet is shown in Figure A-A-30.

o. LGM 7 Crew Assignment Sheet. The data sheet for LGM 7 is completed next. (See Figure A-A-31.)

(1) NOTE: LGM 7 is operated at a 288-Kbps rate. Because of the combination of rates into the TGM, secondary traffic channels are created therefore, combination of rates is not recommended. As will be observed later, operating the LGM in this particular case at a 576-Kbps rate would not use any additional NCMD channels in the AN/TTC-39(V) and would not change the supergroup rate.

(2) Normally, it is advantageous to operate multiplexers at the lowest rate that will support the required traffic channels in order to minimize transmission bandwidth. This particular situation is an exception.

(3) To determine the channel sequence in the group, Tables A-A-2 through A-A-5 are used. Table A-A-3 has the sequence for the 576-Kbps family rates. The first line of the table has the sequence for the 288-Kbps rate being used. The time slots are numbered 1 through 9 to account for the nine time slots in the 288-Kbps group. Numbering of the time slots begins in the block annotated with note one on the form. In this case there is no dummy time slot in the output sequence. Because common battery power is supplied to the DSVTs, the power from the loop modems is "ON." The DSVTs (41 through 48) are identified in the remarks column.

p. RLGM 1 Crew Assignment Sheet. The crew assignment sheet for RLGM 1 is completed next. (See Figure A-A-32.) This sheet provides data to the installer on how to set up the RLGM. Because common battery power is being supplied to the DSVTs, the power from the loop modems is "ON." The DSVTs are listed in the remarks column. Timing is being derived from the received group in a loopback mode. The RLGM remote

LGM: 7	ASSEMBLAGE: MPX02 (AN/TSQ-146(V))
	LOCATION: NODE B

NOTES:

1. Channel 1 is time slot 3 for 16 Kbps channels of 288 Kbps group; or 32 Kbps channels of 576 Kbps group. Channel 1 is time slot 2 for all other groups.
2. For normal operation, set Norm/LP switch to Norm.
3. "ON" provides DC power to terminal equipment.

HIGH GROUP DATA RATES

POSITION	BIT RATE
2	128
3	144
4	258
5	288
6	512
7	576

AAU GAIN LEVELS

POSITION	XMIT	RCV
1	-3 dB	+3 dB
2	0 dB	0 dB
3	+10 dB	-10 dB
4	+20 dB	-20 dB

CCA SLOT NO.	CHAN NO	TIME SLOT NO. 1	SETTINGS				REMARKS
			ANALOG (AAU)			DIGITAL (LM)	
			XMIT GAIN	RCV GAIN	MODE2	PWRFEED 3	(TERMINAL/SUBSCRIBER/CCSD
A6	1	2	S3__(1-4)	S5__(1-4)	NORM__ LP__	ON __✓__ OFF__	DSVT 41
	2	3	S4__(1-4)	S6__(1-4)	NORM__ LP__	ON __✓__ OFF__	DSVT 42
A7	3	4	S3__(1-4)	S5__(1-4)	NORM__ LP__	ON __✓__ OFF__	DSVT 43
	4	5	S4__(1-4)	S6__(1-4)	NORM__ LP__	ON __✓__ OFF__	DSVT 44
A8	5	6	S3__(1-4)	S5__(1-4)	NORM__ LP__	ON __✓__ OFF__	DSVT 45
	6	7	S4__(1-4)	S6__(1-4)	NORM__ LP__	ON __✓__ OFF__	DSVT 46
A9	7	8	S3__(1-4)	S5__(1-4)	NORM__ LP__	ON __✓__ OFF__	DSVT 47
	8	9	S4__(1-4)	S6__(1-4)	NORM__ LP__	ON __✓__ OFF__	DSVT 48
A10	9		S3__(1-4)	S5__(1-4)	NORM__ LP__	ON __ OFF__	
	10		S4__(1-4)	S6__(1-4)	NORM__ LP__	ON __ OFF__	
A11	11		S3__(1-4)	S5__(1-4)	NORM__ LP__	ON __ OFF__	
	12		S4__(1-4)	S6__(1-4)	NORM__ LP__	ON __ OFF__	
A12	13		S3__(1-4)	S5__(1-4)	NORM__ LP__	ON __ OFF__	
	14		S4__(1-4)	S6__(1-4)	NORM__ LP__	ON __ OFF__	
A13	15		S3__(1-4)	S5__(1-4)	NORM__ LP__	ON __ OFF__	
	16		S4__(1-4)	S6__(1-4)	NORM__ LP__	ON __ OFF__	
A5	GROUP		CHAN RATE: 32 Kbps __✓__ 16 Kbps ___				
A16	GROUP		TIMING: STA CLK LOOP __✓__				

NOTES:

GROUP CONNECTIONS

GM ____ GP (1-4) _____
LSCDM ____
TED ____
TGM __3__ GP (1-4) _____

Pg. of

Figure A-A-31. LGM 7 Crew Assignment Sheet

RLGM: 1	ASSEMBLAGE:
	LOCATION: E

NOTES:

1. For normal operation, set Norm/ Lp switch to Norm.
2. "ON" provides DC power to terminal equipment.

AAU GAIN LEVELS

POSITION	XMIT	RCV
1	-3 dB	+3 dB
2	0 dB	0 dB
3	+10 dB	-10 dB
4	+20 dB	-20 dB

CCA SLOT NO.	CHAN NO.	SETTINGS: ANALOG (AAU) XMIT GAIN	RCV GAIN	MODE 1	DIGITAL (LM) PWR FEED 2	REMARKS (TERMINAL/SUBSCRIBER/CCSD)
	1	S4___(1-4)	S6___(1-4)	NORM__LP__	ON ✓ OFF__	DSVT 53 LOCATION E
A6	2	S3___(1-4)	S5___(1-4)	NORM__LP__	ON ✓ OFF__	DSVT 54 LOCATION E
A7	3	S4___(1-4)	S6___(1-4)	NORM__LP__	ON ✓ OFF__	DSVT 55 LOCATION E
	4	S3___(1-4)	S5___(1-4)	NORM__LP__	ON ✓ OFF__	DSVT 56 LOCATION E
A10	CHAN RATE: 32 Kbps ✓ 16 Kbps __					
A11	TIMING: MASTER __ LOOP ✓					

NOTES:

RLGM CONNECTIONS

RMC1

REMOTE POWER IN
(FRONT PANEL): ON ✓ OFF__

Pg. of

Figure A-A-32. RLGM 1 Crew Assignment Sheet

power source is shown "ON." This means the RLGM is receiving power from the RMC. In this mode the DSVTs must be located 525 feet or less from the RLGM rather than the normal 2 miles.

q. RMC 1 Crew Assignment Sheet. The crew assignment sheet for RMC 1 is completed next. This sheet provides data to the installer on how to set up the RMC. (See Figure A-A-33.) The low-group interface (to RLGM 1) is shown as "ON." The DSVTs (49 through 52) are listed in the remarks column. The high group rate switch position is "5" for 288 Kbps. Timing is being derived from the group received from the TGM in a loopback mode. The low group is connected to RLGM 1 and power is being fed to that unit. The high-group termination is through GM1, group two, to group four of the TGM 3.

r. RMC 1 Channel Assignment Sheet. Because the crew assignment sheets for RMC 1 and RLGM 1 have been completed, RMC 1 can be completed. To determine the channel sequence in the group, Tables A-A-2 through A-A-5 are used. Table A-A-3 has the channel sequence for 576-Kbps family rates. The fourth line has the entry for an RMC with a 288-Kbps high group output and a 144-Kbps low-group input from an RLGM. The sequence is OH, A1, B1, A2, B2, A3, B3, A4, B4. The overhead is the first time slot. Subsequent time slots alternate between RLGM 1 and RMC 1. (See Figure A-A-34.)

s. TGM 3 Crew Assignment Sheet. The CAS for TGM 3 is completed next. (See Figure A-A-35.) The frame switches are shown in the "yes" position. (All four groups are Tri-Service Tactical Communications Program (TRI-TAC) formatted groups.) The supergroup format (for CCA slot A12) is found by checking Tables B-A-7 through B-A-9 to determine the proper MSF. Table B-A-8 shows that the format for the TGM with group inputs of 576, 576, 288, and 288 Kbps is a 3A3 MSF. The switch position for the supergroup format (found on the chart printed on the TGM crew assignment sheet) is "2." The entries for group and supergroup connections are self-explanatory.

t. TGM 3 Channel Assignment Sheet. The channel assignment sheet for TGM 3 is completed next. Because the sum of the group inputs (576 plus 576 plus 288 plus 288) is equal to 1,728 Kbps and the supergroup rate is 2,304 Kbps, secondary traffic channels are generated. The particular combination of rates being used is found on line nine of Table B-A-8. This is type 3A3 MSF with an output supergroup rate of 2,304 Kbps. The maximum allowable input rate for each group is 576, 576, 576, and 576 Kbps. However, input rates of 576, 576, 288, and

RMC: 1	ASSEMBLAGE:
	LOCATION: B

NOTES:

1. For normal operation, set Norm/Lp switch to Norm.
2. "ON" provides DC power to terminal equipment.

HIGH GROUP DATA RATES	
POSITION	BIT RATE
2	128
3	144
4	258
5	288
6	512
7	576

AAU GAIN LEVELS		
POSITION	XMIT	RCV
1	-3 dB	+3 dB
2	0 dB	0 dB
3	+10 dB	-10 dB
4	+20 dB	-20 dB

CCA SLOT NO.	CHAN NO.	TIME SLOT NO. 1	SETTINGS				REMARKS (TERMINAL/SUBSCRIBER/CCSD)
			ANALOG (AAU)			DIGITAL (LM)	
			XMIT GAIN	RCV GAIN	MODE 1	PWR FEED 2	
A9	1	2	S3__(1-4)	S5__(1-4)	NORM__ LP__	ON_✓_ OFF__	DSVT49 LOCATION D
	2	3	S4__(1-4)	S6__(1-4)	NORM__ LP__	ON_✓_ OFF__	DSVT50 LOCATION D
A10	3	4	S3__(1-4)	S5__(1-4)	NORM__ LP__	ON_✓_ OFF__	DSVT51 LOCATION D
	4	5	S4__(1-4)	S6__(1-4)	NORM__ LP__	ON_✓_ OFF__	DSVT52 LOCATION D
A11	5	6	S3__(1-4)	S5__(1-4)	NORM__ LP__	ON__ OFF__	
	6	7	S4__(1-4)	S6__(1-4)	NORM__ LP__	ON__ OFF__	
A12	7	8	S3__(1-4)	S5__(1-4)	NORM__ LP__	ON__ OFF__	
	8	9	S4__(1-4)	S6__(1-4)	NORM__ LP__	ON__ OFF__	
A6	GROUP		LOW GROUP INTERFACE: ON ____ OFF____				
A15	GROUP		CHAN RATE : 32 Kbps ✓ 16 Kbps ___ RATE: 5 (2-7)				
A16	GROUP		TIMING: STA CLK — LOOP — ✓				

NOTES:

GROUP CONNECTIONS

HIGH GROUP
TGM3 GROUP 4 THROUGH GM1,
GP2

LOW GROUP
RLGM1
REMOTE POWER OUT
(FRONT PANEL) ON_✓_ OFF__

Pg. of

Figure A-A-33. RMC 1 Crew Assignment

Equipment ID: RMC1				
Location: B				
High Speed Termination Low Speed Termination (TGM & RMC)		AN/TSQ-146(V), TGM3, GP4 Through GM1, GP2		
		GP 1	RLGM 1, Location E	
		GP 2 (TGM Only)		
		GP 3 (TGM Only)		
		GP 4 (TGM Only)		
High Speed Time Slot	Low Speed Group or NCMD	Low Speed Time Slot or NCMD CHNL	CCSD	Use/Remarks
1				OH
2				DSVT 49 Location D
3				DSVT 53 Location E
4				DSVT 50 Location D
5				DSVT 54 Location E
6				DSVT 51 Location D
7				DSVT 55 Location E
8				DSVT 52 Location D
9				DSVT 56 Location E

Pg. of

Figure A-A-34. RMC 1 Channel Assignment Sheet

TGM: 3	ASSEMBLAGE: MPX02 (AN/TSQ- 146(V))
	LOCATION: NODE B

NOTES:

1. Starred data rates nonapplicable to supergroup.
2. Double starred data rates nonapplicable to groups.

GROUP/SUPERGROUP DATA RATES

POSITION	BIT RATE	POSITION	BIT RATE
*0	OFF	8	1024
*1	72	9	1152
2	128	10	1536
3	144	11	2048
4	256	12	2304
5	288	** 13	4096
6	512	**14	4608
7	576	—	—

SUPERGROUP FRAME FORMATS

POSITION	FORMAT	RATIO
0	3C	4:2:1:1
1	3B	2:1:1
2	3A3	1:1:1:1
3	3A1	1:1
4	3A2	1:1:1
5	D1	4 RLGMS
6	D2	2 RLGMS
7	SG	SINGLE GROUP

CCA SLOT NO.	GROUP	SETTINGS		
A5	1	FRAME: RATE:	YES ✓	NO — 7 (0-12)
A6	2	FRAME: RATE:	YE S ✓	NO — 7 (0-12)
A7	3	FRAME: RATE:	YES ✓	NO — 5 (0-12)
A8	4	FRAME: RATE:	YES ✓	NO — 5 (0-12)
A9	SUPER	TMG:	STA CLK —	LOOP ✓
A10	SUPER	RATE:	12(2-14)	
A12	SUPER	CHAN RATE: FORMAT:	32 Kbps ✓ 6 (0-7)	16 Kbps —

NOTES:

GP1-LGM5

GP2-LGM6

GP3-LGM7

GP4-RMC1 FOR LOCATION D AND RLGM1 FOR LOCATION E

GROUP/SUPERGROUP CONN

GROUP 1
GM — GP (1-4) —
LSCDM —
TED —
LGM 5
TGM — GP (1-4,SG) —

GROUP 2
GM — GP (1-4) —
LSCDM —
TED —
LGM 6
TGM — GP (1-4,SG) —

GROUP 3
GM — GP (1-4) —
LSCDM —
TED —
LGM 7
TGM — GP (1-4,SG) —

GROUP 4
GM 1 GP (1-4) 2
LSCDM —
TED —
LGM —
TGM — GP (1-4,SG) —

SUPERGROUP
GM 1 GP (1-4) 1
LSCDM —
TED —
LGM —
TGM — GP (1-4,SG) —

Pg. of

Figure A-A-35. TGM 3 Crew Assignment Sheet

288 Kbps are being used. Therefore, each bit in groups three and four must be sampled twice. (There is one secondary channel for each channel in these groups.) Because the supergroup rate is 2,304 Kbps, there will be 2,304 divided by 32 or 72 channels. The time slots are numbered 1 through 72. The time slots for each of the four groups are entered. (See Figure A-A-36.) Finally, the use of each time slot in each group is entered.

(1) The sample sequence for the supergroup of TGM 3 is found by using Tables A-A-4 and A-A-5. Table A-A-4 shows that the sample sequence for MSF 3A3 is G1, G2, G3, G3 . . . . It is usually easiest to enter the use of the time slots by group. The use of each time slot for group one is entered by referring to the LGM crew assignment sheet for LGM 5. Because of the sampling sequence, these will be entered in time slots 1, 5, 9, etc. Note that the sequence begins with the overhead channels, continues with the dummy channel, and then proceeds to the first traffic channel (DSVT 1). The use of the channels for LGM 6 is then entered in the same manner. The use of the channels for LGM 7 is then entered. Note that in this case there is no dummy channel. Also remember that this group has one secondary channel for each traffic or overhead channel. The sequence is OH, secondary OH, DSVT 41, secondary DSVT 41, etc.

(2) NOTE: In this example there was no reason to operate LGM 7 at 288 Kbps. The nine channels have been multiple sampled resulting in the same supergroup rate and using the same number of NCMD channels in the AN/TTC-39(V). Operation of the LGM at a 576-Kbps rate in this case, would not have consumed any additional resources and would have provided spare channels.

(3) The use of the channels for the group from RMC 1 is then entered by referring to the channel assignment sheet for that RMC. There is also one secondary channel for each overhead or traffic channel. The sequence is OH, secondary OH, DSVT 49, secondary DSVT 59, etc. Note that in this case the secondary channels are also wasted. If one RMC and one RLGM were the only multiplexers available, secondary channels were unavoidable in this situation. However, if the RMCs had been available, their installation and operation at a 576-Kbps combined rate may have been a better choice.

u. Node B AN/TTC-39(V) Channel Assignment Sheet. The channel assignment sheets for the Node B AN/TTC-39(V) are completed next. (See Figure A-A-37.) These sheets contain the information related to the

Equipment ID: TGM3				
Location: MPX02(AN/TSQ-146(V), Node B)				
High Speed Termination		AN/TSQ-146(V), TGM3< GP4 Through GM1, GP2		
Low Speed Termination (TGM & RMC)		GP1	LGM 5	
		GP2 (TGM Only)	LGM 6	
		GP3 (TGM Only)	LGM 7	
		GP4 (TGM Only)	RMC 1 and RLGM 1 through GM 1, GP 2	
High Speed Time Slot	Low Speed Group or NCMD	Low Speed Time Slot or NCMD CHNL	CCSD	Use/Remarks
1	1	1		OH (From LGM5)
2	2	1		OH (From LGM6)
3	3	1		OH (From LGM7)
4	4	1		OH (From RMC1)
5	1	2		Dummy (From LGM5)
6	2	2		Dummy (From LGM6)
7	3	2		Secondary OH (From LGM7)
8	4	2		Secondary OH (From RMC1)
9	1	3		DSVT 1
10	2	3		DSVT 17
11	3	3		DSVT 41
12	4	3		DSVT 49
13	1	4		DSVT 2
14	2	4		DSVT 18
15	3	4		Secondary (DSVT 41)
72	4	18		Secondary (DSVT 52)

Pg. of

Figure A-A-36. TGM 3 Channel Assignment Sheet

AN/TTC-39(V) group going to the AN/TSQ-146 and the AN/TTC-39(V) group going to the CNCE. For both groups, the time slots have been numbered 1 through 72 because both groups have 72 channels. For the group going to the AN/TSQ-146, the first nine time slots are assigned to NCMD 1, the second nine to NCMD 2, etc. For group B101 from the CNCE, the first nine time slots are assigned to NCMD 9, the second nine to NCMD 10, etc.

v. Node B CNCE Crew Assignment Sheet. Figure A-A-38 presents the crew assignment sheet for the Node B CNCE. Both digital groups, BA40 and B101, are listed on this form.

w. Node B CNCE Channel Assignment Sheet. One set of CNCE channel assignment sheets (Figure A-A-39) is filled in for each digital group listed on the Node B crew assignment sheet. For the type 1 groups of BAS40 and B101, only the first channel is an overhead. At Node B, group BA40, consisting of 64 channels, is reassigned to group B101. Ten channels of B101 are left as spares. With this scheme, digital loop groups B and D (from LGM 2 and LGM 4) and trunk group cluster 1 (from the node AN/TTC-39(V)) are assigned to the AN/TTC-39(V) at Node B.

Equipment ID: TAS02 (AN/TTC-39(V))				
Location: Node B				
High Speed Termination		MPX02 (Node B AN/TSQ-146(V), TGM3 through GM1, GP1)		
Low Speed Termination (TGM & RMC)		GP1		
		GP2 (TGM Only)		
		GP3 (TGM Only)		
		GP4 (TGM Only)		
High Speed Time Slot	Low Speed Group or NCMD	Low Speed Time Slot or NCMD CHNL	CCSD	Use/Remarks
1	1	1		OH (From LGM5)
2	1	2		OH (From LGM6)
3	1	3		OH (From LGM7)
4	1	4		OH (From RMC1)
5	1	5		Dummy (From LGM5)
6	1	6		Dummy (From LGM6)
7	1	7		Secondary OH (From LGM7)
8	1	8		Secondary OH (From RMC1)
9	1	9		DSVT 1
10	2	1		DSVT 17
11	2	2		DSVT 41
12	2	3		DSVT 49
13	2	4		DSVT 2
14	2	5		DSVT 18
15	2	6		Secondary (DSVT 41)
.	.	.		.
72	8	9		Secondary (DSVT 52)

Pg. of

Figure A-A-37. Node B AN/TTC-39(V) Channel Assignment Sheet

Equipment ID: TAS02 (AN/TTC-39(V))				
Location: Node B				
High Speed Termination		CNC02 (Node B CNCE)		
Low Speed Termination (TGM & RMC)		GP1		
		GP2 (TGM Only)		
		GP3 (TGM Only)		
		GP4 (TGM Only)		
High Speed Time Slot	Low Speed Group or NCMD	Low Speed Time Slot or NCMD CHNL	CCSD	Use/Remarks
1	9	1		OH
2	9	2		DSVT 39 (From LGM 4)
3	9	3		DSVT 40 (From LGM 4)
4	9	4		Traffic (From LGM 4)
5	9	5		"
6	9	6		"
•	•	•		"
•	•	•		"
16	1	7		Traffic (From LGM 4)
17	10	8		DSVT 35 (From LGM 2)
18	10	9		DSVT 36 (From LGM 2)
19	11	1		Traffic (From LGM 2)
20	11	2		"
•	•	•		"
31	12	4		Traffic (From LGM 2)

Pg. of

Figure A-A-37. (Cont'd)

Equipment ID: TAS02 (AN/TTC-39(V))				
Location: Node B				
High Speed Termination		CNC02 (Node B CNCE)		
Low Speed Termination (TGM & RMC)		GP1		
		GP2 (TGM Only)		
		GP3 (TGM Only)		
		GP4 (TGM Only)		
High Speed Time Slot	Low Speed Group or NCMD	Low Speed Time Slot or NCMD CHNL	CCSD	Use/Remarks
32	12	5		Traffic (TGC01, Trunk 1)
33	12	6		"
•	•	•		"
•	•	•		"
•	•	•		"
62	15	8		"
63	15	9		Traffic (TGC01,Trunk 31)
64	16	1		Spare
•	•	•		"
•	•	•		"
•	•	•		"
72	16	9		Spare

Pg. of

Figure A-A-37. (Cont'd)

Node: B					
CNCE Type: IIIB					
Equipment ID: CNC02					
System Rate (32 or 16 Kbps): 32 Kbps					
Red IDF Patch ID	Group CTID	Group Size (CHANs)	MSF Type	Equipment Connectivity from CRF	CHAN Rate (16,32, MX)
	BA40	64	1	TED01	32
				CDL01	
	B101	72	1	TED02	32
				GMX01	
				TAS02	

Pg. of

Figure A-A-38. Node B CNCE Crew Assignment Sheet

Group CTID: BA40			
No. Channels: 64			MSF Type: 1
Source CTID	DESTIN CTID	CCSD	Use/Remarks
BA40001	BA40001	JBFPD000	OH-Primary
	BA40002	JBFPDL00	Spare
	BA40003	JBFPDL01	Spare
B101002	BA40004	YBFJB401	DSVT39 (From LGM4)
B101003	BA40005	YBFJB402	DSVT40 (From LGM4)
B101004	BA40006	YBFJB403	Unused
B101005	BA40007	YBFJB404	"
B101006	BA40008	YBFJB405	"
•	•	•	"
•	•	•	"
B101016	BA40018	YBFJB415	Unused (From LGM4)
B101017	BA40019	YBFJB201	DSVT 35 (From LGM2)
B101018	BA40020	YBFJB202	DSVT 36 (From LGM2) Unused (From LGM2)
B101019	BA40021	YBFJB203	Unused (From LGM2)
B101020	BA40022	YBFJB204	"
B101021	BA40023	YBFJB205	"
•	•		"
•	•		"
B101031	BA40033	YBFJB215	Unused (From LGM2)

Pg. of

Figure A-A-39. Node B CNCE Channel Assignment Sheet

Group CTID: BA40			
No. Channels: 64			MSF Type: 1
Source CTID	DESTIN CTID	CCSD	Use/Remarks
B101032	BA40034	JBFPD001	Traffic (TGC01,Trunk1)
B101033	BA40035	JBFPD002	Traffic (TGC01, Trunk 2)
•	•	•	"
•	•	•	"
B101062	BA40064	JBFPD031	Traffic (TGC01, Trunk 31)

Pg. of

Figure A-A-39. (Cont'd)

Group CTID: B101			
No. Channels: 72			MSF Type: 1
Source CTID	DESTIN CTID	CCSD	Use/Remarks
B101001	B101001	JBFPD001	OH-Primary
BA40004	B101002	YBFJB401	DSVT 39 (From LGM4)
BA40005	B101003	YBFJB402	DSVT 40 (From LGM4)
BA40006	B101004	YBFJB403	Unused (From LGM4)
BA40007	B101005	YBFJB404	"
BA40008	B101006	YBFJB405	"
.	.	.	"
.	.	.	"
BA40018	B101016	YBFJB415	Unused (From LGM4)
BA40019	B101017	YBFJB201	DSVT 35 (From LGM2)
BA40020	B101018	YBFJB202	DSVT 36 (From LGM2)
BA40021	B101019	YBFJB203	Unused (From LGM2)
BA40022	B101020	YBFJB204	"
BA40023	B101021	YBFJB205	"
•	•	•	"
•	•	•	"
BA40033	B101031	YBFJB215	Unused (From LGM2)
BA40034	B101032	JBFPD001	Traffic (TGC01, Trunk 1)
BA40035	B101033	JBFPD002	Traffic (TGC01, Trunk 2)

.

Pg. of

Figure A-A-39. (Cont'd)

Group CTID: B101			
No. Channels: 72			MSF Type: 1
Source CTID	DESTIN CTID	CCSD	Use/Remarks
BA40036	B101034	JBFPD003	Traffic (TGC01, Trunk 3)
•	•	•	"
•	•	•	"
BA40064	B101062	JBFPD031	Traffic (TGC01, Trunk 3)
	B101063	DOODJ001	Spare
	B101064	DOODJ002	Spare
	•	•	"
	•	•	"
	B101072	DOODJ010	Spare

Pg. of

Figure A-A-39. (Cont'd)

ANNEX A TO APPENDIX A TO ENCLOSURE A

AUTOMATED SYSTEM PROPAGATION PLANNING TOOLS

1. Introduction. This annex provides a description of the various automated propagation programs that assist the network planner.

2. Terrain Resources Analysis Program (TRAP)

a. Introduction. TRAP is a capability of the Army tactical frequency engineering system (ATFES). TRAP's main propagation model is the Terrain Integrated Rough Earth-Model (TIREM). TIREM examines the terrain profile between transmitter and receiver sites and calculates the propagation loss by choosing the prediction algorithm that best represents the actual propagation mode. Line of sight (LOS), diffraction, and troposcatter modes are selected for either smooth or irregular profiles, as appropriate. TIREM calculates transmission loss over irregular terrain (including seawater, if part of the propagation path) when the profile of terrain elevations is known. Based on the profile's geometry, TIREM selects an appropriate mode of propagation for paths whose end points are within LOS or beyond LOS (BLOS) for frequencies from 1 MHz to 20 GHz. The effects of absorption are included in the calculations for frequencies above 10 GHz. TIREM does not consider rainscatter coupling, ducting phenomena, or ionospheric (skywave) propagation. Attenuation because of rain, foliage, or man-made obstacles is also not considered. TIREM only considers the cases of linear, horizontal, or vertical polarization. The model does not calculate performance improvements resulting from angle, space, or frequency diversity.

b. TIREM Description

(1) TIREM is designed to compute the median basic transmission loss by first determining the proper mode of propagation and then using the appropriate loss algorithm for that mode to determine the loss over the selected path.

(2) Using the terrain elevation profile, several key parameters necessary for initial propagation mode selection, such as radio-horizon distance, are computed. If a portion of the profile has zero elevation

(relative to mean sea level) it is assumed to represent seawater, and its effect on the total loss is modeled with a spherical-earth algorithm. Refractive effects of the earth's atmosphere are accounted for by using an effective earth radius for antenna heights below 3.2 km and the exponential reference atmosphere for greater antenna heights.

(3) Using the calculated radio-horizon distances, an initial mode selection is made based on whether the given path is within or beyond the horizon. The final determination of propagation mode is based on a number of parameters such as Fresnel zone clearance and angular distance.

(4) The model then branches to the appropriate algorithm for that propagation mode to determine the path propagation loss. The effects of atmospheric absorption by oxygen and water are included in the loss calculations whenever the frequency is ≥10 GHz.

(5) TIREM also contains an option to calculate the expected variation in loss because of long-term fading or modeling variability.

c. Terrain Profiles. TIREM obtains the terrain profile either from the user-entered profile or from a topographic data file on disk.

(1) There are two types of user-entered profiles: equally spaced and unequally spaced. The difference being whether or not equal distances exist between successive points in the profile. The input parameters include the elevations for each point, the units for elevations, the distance between points, and the units of distances between points.

(2) TIREM generates a topographic file profile by reading the path profile elevation data stored in a file. The user must generate the topographic data file prior to running TIREM. This file is generated from Level 1 National Imagery and Mapping Agency (NIMA) data that are converted to a format suitable for use in TIREM by the worldwide topographic loader (WOTL) program. The input parameters include transmitter and receiver elevation options and transmitter and receiver site coordinates.

(3) TIREM has an option to increment or decrement several of the input parameters. This option enables the user to produce output for several values of an input parameter in a single execution of the program. The parameters that can be incremented are the frequency, transmitter and receiver antenna structural height, and variability percentage. The parameters that can be decremented are the profile end point locations, frequency, transmitter and receiver antenna structural height, and variability percentage.

d. TIREM Output Options. There are three output options: output to the screen in full-screen format, output results to a file in a printed report format, and output to a plot file. If the user selects the first option, the results are displayed as shown in Figure A-A-A-1; first the input parameters are displayed, followed by the TIREM results. The second option is recommended for users who want a hard copy. The option to send the profile to a plot file enables the user to create an American Standard Code for Information Exchange (ASCII) file containing the profile point number, the distance of the profile point from the transmitter, and the elevation at that profile point for each point in the terrain profile used for that execution of TIREM. A fourth column in the plot file contains the elevations for each point in the terrain profile that has been corrected to account for the ray bending that occurs as a result of earth curvature and atmospheric refractivity. These elevations can be plotted, linearly, to give an accurate representation of the relationship between the ray path and the terrain profile.

3. Systems Planning, Engineering, and Evaluation Device (SPEED)

a. General

(1) This paragraph describes SPEED, outlines its capabilities, and describes its utilization at the CINC and CJTF level.

(2) SPEED is an integrated package of software systems provided to the MAGTF, installation can be done on any general purpose computer system. SPEED is provided to other DOD agencies upon request. All of the SPEED communication planning and engineering applications are integrated into a Microsoft Windows 3.1/Windows 95-based desktop management system that can be used by the Marine Corps commander in

```
**********TTP INPUT PARAMETERS**********
[VERSION: 3.02]
-----------------------------------------------------------------------------------------------------
GENERAL PARAMETERS:
FIRST TOPO DATA FILE USED:  USER-ENTERED
NUMBER OF TOPO DATA FILES USED: 0     PERMITIVITY:      14.54756
DATUM CODE: 0                         CONDUCTIVITY:     .4845    (SIEMENS/M)
CLIMATIC ZONE: 1                      REFRACTIVIT    355.            (N-UNITS)
VARIABILITY PERCENT:  99.      (%)    HUMIDITY:         10.            (GM/M**3)
-----------------------------------------------------------------------------------------------------
TRANSMITTER PARAMETERS:               RECEIVER PARAMETERS:
IDENTIFIER:              [SAMP2TX]    IDENTIFIER:                    [SAMP2 RX]
ANTENNA HEIGHT:      65.      (FT)    ANTENNA HEIGHT:      105.            (FT)
SITE ELEVATION:    2850.      (FT)    SITE ELEVATION:     3240.            (FT)
LOCATION: - - - - - - - - - - - - - - - - - - - - LOCATION: - - - - - - - - - - - - - - - - - - - -
MAXIMUM ANT DIM:     8.0      (FT)    MAX ANT DIM:              8.0        (FT)
ANTENNA GAIN:        37.1     (dBi)
FREQUENCY:         4700.     (MHz)
POWER:                 .25     (W)
POLARIZATION:  [V]                          ** TRANSMIT TO CONTINUE **

          ********** TTP TIREM RESULTS [VERSION: 3.02]**********
-----------------------------------------------------------------------------------------------------
STEPPING PARAMETER: NONE              CURRENT VALUE:            .00
                    (N/A)
INCRMT/DECRMT VALUE: .00    (N/A)     INCRMT/DECRMT TYPE:      [ ]
-----------------------------------------------------------------------------------------------------
 OUTPUT PARAMETERS:
 PROPAGATION MODE:     LINE OF SIGHT
 TX TAKE-OFF ANGLE                    (DEG)
 RX TAKE-OFF ANGLE:                   (DEG)                  (%)     BASIC LOSS
 NEAR FLD BOUNDARY-TX:    611.24      (FT)                  0.01          136.8
 NEAR FLD BOUNDARY:RX:    611.24      (FT)                  0.10          138.5
 PATH LENGTH:              30.        (SM)                  1.00          140.5
 PROPAGATION LOSS:        146.0       (dB)                 10.00          143.3
 FREE-SPACE LOSS:         139.6       (dB)                 50.00          146.1
 ABSORPTION LOSS:            .0       (dB)                 90.00          147.7
 BEARING (TX-RX)             .0      (DEG)                 99.00          149.0
 SCATTERING ANGLE:           .00000  (DEG)                 99.90          149.9
 FIELD STRENGTH:             .00914  (DEG)                 99.99          150.7
 POWER DENSITY:           -53.0164   (dBm/M**2)            99.00          149.0
-----------------------------------------------------------------------------------------------------
                                 ** TRANSMIT TO CONTINUE **
```

Figure A-A-A-1. Example TIREM Output Results for User-Entered Profile Sample Run

the field to support rapidly changing tactical environments. A version of SPEED 6.1 is available running under Windows NT 4.0 in 16 bit protected mode. SPEED supports communication asset deployment planning by modeling radio frequency (RF) communications quality to include the following transmission modes:

(a) Groundwave.

(b) Line of sight.

(c) Tropospheric Refraction.

(d) Obstacle Gain.

(e) Ionospheric.

(f) Satellite.

(3) SPEED uses a familiar map metaphor for both video display and hard copy to support the rapid communication decisions that are made by Marine Corps maneuver units. By displaying either global shoreline maps or local terrain contour maps, communication officers are provided with global and tactical overviews of communication assets. Map databases include the NIMA, Digital Terrain Elevation Data (DTED), and the World Vector Shoreline (WVS). Fifteen second DTED data is provided with SPEED.

(4) SPEED terminals have been deleted from the Marine Corps inventory. SPEED software has been redesigned to run on any Windows system. Recommended hardware is a Pentium computer with 128 Megabytes (MB) of random access memory (RAM), a 200 MB hard drive, and color monitor

b. Description

(1) SPEED applications are incorporated into a Windows 3.1/95 desktop applications manager. The SPEED Application Manager (SAM), launches and controls DOS and Windows-based applications. SAM allows for the incorporation of communication planning and engineering tools as

analysis utilities. The application manager provides essential desktop management of communication planning and engineering tools, allowing the user to save and launch applications from a user-designated plan. The plan will store applications in user-designated configurations, providing customized management of selection applications. SPEED software is provided on a 2 CD-ROM package. One SPEED CD-ROM contains the software application, the second CD-ROM contains 15 second DTED, permitting the user the ability to read DTED from the CD-ROM and save hard drive space.

(2) SPEED Version 6.1 includes the following integrated analysis applications in a dropdown menu, controlled by the Software Application Manager (SAM):

(a) Point To Point (PTP).

(b) Radio Coverage Analysis (RCA).

(c) High Frequency Planner (HFPLAN).

(d) Satellite Planner (SATPLAN).

(3) SPEED Version 6.1 also includes the following utilities:

(a) Topographic Manager (TOPOMAN).

(4) The SPEED SAM is a user-friendly, graphical interface that controls SPEED remote analysis applications PTP analysis, RCA, SATPLAN and HF PLAN. SAM manages the resources for these remote applications, providing efficient communications planning analyses. Selected site information can be printed, providing installation teams with exact location, antenna orientation and equipment parameters.

(5) HFPLAN, formerly known as Chirpsounder Integrated MUF Prediction System (CHIMPS), provides recommended ranges of HF based on the entry of near-real-time ionospheric propagation characteristics over an intended communications path. HFPLAN specifies sets of friendly and hostile communications sites for which propagation predictions can be made. HF planner includes the ability to rank the available field expedient

antennas for the best link performance. Instructions are also provided for construction of field expedient antennas at the desired frequency of operation. HF Planner also permits specification and modification of the following parameters:

(a) Time (year, month, and day).

(b) Chirpsounder maximum observed frequency (MOF). (Use of Chirpsounder radios has been suspended because of HF interference during operation).

(c) Sunspot number or 10.7 cm solar flux.

(d) Antenna heights.

(e) Terrain features.

(f) Noise models (atmospheric and man-made).

(g) Antenna polarization.

(h) Transmission mode.

(6) SPEED utilities include TOPOMAN.

(a) TOPOMAN creates processed DTED directly from the NIMA source DTED and allows the processing of DTED Level 1 data from NIMA on compact disc read-only memory CD-ROM. SPEED allows the user to create three-second or 15 second DTED maps, depending on the accuracy required. Three second DTED requires 25 times more drive space then 15 second DTED. Three second DTED provides one data point every 90 meters (at the equator), 15 second DTED provides one data point every 450 meters (at the equator).

c. Capabilities. This section describes specific capabilities contained in the SPEED software. With the integrated approach that SPEED provides, there are multitudes of capabilities available to the user. The SPEED software user's manual is incorporated into an integrated help screen menu, that fully describes its capabilities and uses. As described earlier

SPEED is an integrated service of applications. These applications provide specific functionality. SPEED provides the following planning and engineering capabilities:

(1) The ability to zoom into any part of the world.

(2) The generation of to-scale tactical maps with to-scale analyses and unit information. SPEED 6.1 uses Windows driven print drivers providing the ability to print out to-scale maps.

(3) Standard radio and antenna databases which can be customized by the user for adding new radio and antenna types.

(4) All NIMA geodetic data that allow the SPEED geodetic server to match any NIMA printed map.

(5) The ability to set global environment defaults to perform analysis.

(6) Point-to-point unit radio communication analysis on VHF, UHF, and SHF linkage.

(7) Point-to-point analysis information on Fresnel clearance zones, antenna pointing azimuth analysis, and propagation mode determination.

(8) Point-to-point prediction analysis on signal-to-noise, received signal level, troposcatter reliability, link margin, and path loss.

(9) Setting of link parameters such as the electromagnetic environment noise, climate, ground type, humidity, refractivity, and fade margins for each analysis.

(10) Two troposcatter models for performing link analysis on the AN/TRC-170 and AN/GRC-201 troposcatter radios.

(11) Numerical analysis results on bi-directional link status, link status, predicted S/N, excess margin, propagation mode, median propagation loss, desired margin, received signal level, path clearance,

scatter angle, data rate, reliability, multipath spread, antenna azimuth, magnetic azimuth, take-off angle, and horizon distance.

(12) Four types of radio coverage analyses: single-site, (analysis of the area covered by a single radio unit) common (Area analysis of a joint area of coverage between 2 radios) for non-PLRS units, PLRS area, and PLRS PLI analysis are provided for PLRS units.

(13) SATCOM link analysis between one satellite and multiple transmit and receive units.

(14) A standard satellite database that can be customized by the user for adding new satellites. Satellite element sets supported are OLES, CHARLIE, and NORAD. To keep the software unclassified, satellite communications configurations used for link analysis are not provide. This data is available form the DoD agency controlling the satellite on which analysis is desired.

(15) The ability to selectively set the communications configuration for each satellite in the satellite database.

(16) The capability of calculating a satellite trace.

(17) The capability of calculating a satellite footprint that represents the satellite communications antenna coverage and vehicle visibility.

(18) The ability to calculate communication visibility for multiple units and multiple satellites.

(19) The ability to plan, engineer, and evaluate PLRS deployments.

(20) The capability to identify and change PLRS master stations.

(21) The capability to specify system center, magnetic variations, AOR, and transmission resource element allocation for PLRS planning.

(22) The capability to perform communications analysis between units in a PLRS deployment plan.

(23) The capability to define corridors, lanes, and zones.

(24) Tools for validating communication, corridors, lanes, and zones for PLRS deployment plans. Provides point to point analysis based on the entry of near-real-time ionospheric propagation characteristics over an intended communications path.

(25) Skywave model to predict maximum usable frequencies (MUFs), frequencies of optimum transmission, and lowest usable frequencies, (LUFs) that prevail when communications occur via reflections off the ionosphere.

(26) Solar model to predict ionospheric behavior using the 10.7-cm solar radio flux.

(27) Groundwave model to predict required transmitter powers of communication ranges that may be achieved when communications occur via a wave coupled to the ground.

(28) Models that calculate signal strength data based on the following ratios:

(a) Signal strength, expressed in dB above 1 microvolt per meter at the receiver.

(b) Signal-to-noise ratios expressed in dB above zero.

(c) Signal-to-interference-plus-noise ratios for a designated transmitter-to-receiver path, expressed in dB above zero S/N ratio.

(29) Analysis for the entry of oblique sounder data for calculation of pseudo-sunspot and 10.7-cm flux values. (Use of Chirpsounder radios has been suspended because of HF interference during operation).

(30) Analysis to compute the ray paths that will propagate between designated transmitter and receiver sites for a modeled ionosphere and specified operating frequency.

(31) Two network analysis models that calculate for a specified day and hour the MUF, FOT, LUF, and signal strength between the designated transmitter or the designated receiver and all other stations in the same network.

4. SCC-2 Functional Description

a. The SCC-2 facilitates mobile subscriber equipment (MSE) system management and control by providing a set of computer-assisted tools and a communications capability to disseminate operations orders and directives, as well as receive messages and reports. The principal functions are:

(1) Automated frequency management, to include antenna polarization.

(2) Terrain analysis and path profiling.

(3) System activation and reconfiguration.

(4) Equipment status reports.

(5) Link and network load status.

(6) Unit database management and demographic profile.

(7) Automatic management of a SCC-2 network.

(8) Communications security (COMSEC) key management.

(9) Network directory management.

(10) System connectivity display and link status.

b. Automated Frequency Management. The SCC-2 provides applications programs that aid in the development of frequency plans for the LOS radios (AN/GRC-226 and AN/GRC-224) and the ratio access unit mobile subscriber radio terminal (RAU)/(MSRT) radio (RT-1539).

(1) There are three frequency plans for the LOS radios: plan one covers 225-400 MHz, plan two 1350-1850 MHz, and plan three 14.5-15.3 GHz. All three frequency plans can support the assignment of up to 300 pairs.

(2) Frequency management for the RT-1539 radio covers 30-88 MHz and is accomplished by developing a grid system that can be overlaid electronically on the digitized maps used by the SCC-2. Each radio net is assigned to a grid or grids based on its geographic distribution on the terrain.

c. Terrain Analysis and Path Profiling. This function is largely performed using the digitized maps stored on the hard disk.

(1) The maps are derived from digitized terrain and culture data supplied by NIMA. These data are modified by the post deployment software support (PDSS) facility to include additional information on potential communications sites, which are referred to as high points. The digitized maps provide coverage for at least 320,000 square km. The SCC-2 maintains a menu of available maps that includes the reference of the map based on the coordinates of the map's southwest point, the maximum and average altitude of the map, and the map longitude.

(2) Each map covers a 50 x 40 km area and up to 40 of these map blocks can be stored simultaneously on a single digital map. Each map is divided into a series of points, each 270 x 240 meters. Each point includes information on maximum altitude and vegetation or buildup. The map also contains information on up to 36 selected high points. Each high point contains the following information: grid coordinates, altitude, degree of cover or concealment, conditions of accessibility, and last time (date) the high point was visited.

(3) The digitized maps are used when an SCC-2 automatically engineers an LOS path between two terminals. The program determines whether an obstruction exists. In this case, the SCC-2 operator requests the program identify and display all high points within a specified radius of either terminal. Based on this information, the operator can have the program investigate alternate locations.

d. System Activation and Reconfiguration. The SCC-2 automatically performs area network activation and reconfiguration, to include transmission links. This function includes LOS frequency engineering, path profiling, terrain analysis, order message generation, and updating of the database and network connectivity graphic display. SCC-2 operators utilize the workstations to input the information that the facility uses to automatically configure the network. The following functions are performed:

(1) Open and close internodal, extension node, and LOS radio links.

(2) Open and close node centers (NCs), extension nodes, and radio access units (RAUs).

(3) Direct the movement of NCs, extension nodes, and RAU and LOS terminals.

e. Equipment Status Reporting. The equipment status of each NC is maintained by the SCC-2. This information is based on a set of reports provided by the management facility (MF) on an as required basis. The MF is normally collocated with each node center switch (NCS) and large extension node switch (LENS) and is the source of node status messages (see subparagraph 4g below).

(1) Equipment status and incident messages are given to the MF operator who reviews the message, edits the message (if required), and directs the SCC-2 to enter the information into the database. The information can be recalled by any SCC workstation to determine the current status.

(2) Failure and return-to-service messages are generated by the managing operator and transmitted in the same way as a voice call, initiating a trunk connecting the path and transmitting the message. Upon receipt of the message, the processor automatically updates the database and graphic display. These messages provide the status of NCSs, LENs, small extension node switch (SENs), RAUs, and associated LOS radio equipment.

f. Link and Network Load Status. The SCC-2 processes and reports information on LOS radio link failures, saturation, and traffic levels. For link failures and saturation, a formatted message is transmitted by the MF to the SCC-2, where it is used to automatically update the database and graphic display.

g. Unit Database Management and Demographic Profile. The MF operator has the capability to transmit a personnel status report to the SCC-2. The SCC-2 operator uses this information prior to moving an NC, extension node, RAU, or LOS terminal. The report can be by team; for example, NC, large extension node (LEN) in a file in the memory. The information can be used to develop demographic profiles to assist the commander in managing the unit. These profiles include the following:

(1) Personnel by military occupational specialty (MOS) and ASI.

(2) Personnel by skill level.

(3) Personnel by grade.

(4) Personnel assigned by battalion and company.

The personnel profile is merged with the equipment status report to provide the commander with a total picture of the status of each team.

h. Automatic Management of a SCC-2 Network. The system control function is performed by a network of SCC-2s. At corps level one, SCC-2 is designated as active and a second as Standby. At division level, the single SCC-2 is designated as Standby. These SCC-2s continuously exchange database content information on a near-real-time basis. The active SCC-2 controls the corps assets, issues directives, and conducts network engineering.

i. COMSEC Key Management. The SCC-2 keeps an up-to-date library of COMSEC keys and their locations in the network. Each team has a unique set of keys. To ensure correct encryption and decryption, the key is checked by the NCS and LENS. The keys are redefined periodically and the SCC-2 automatically updates the entire system with the new key description. At the workstation, the operator can display the status of the

key (active or reserve), its location within the network (user address), and the time and date it is to be defined.

j. Network Directory Management. The SCC-2 maintains an up-to-date listing of all authorized subscribers and their directory numbers and profiles. This feature allows the SCC-2 to transmit technical messages to any one or all NCS and LENS containing information pertaining to directory management such as changes to the preaffiliation, profile, compressed dial, or preprogrammed conference lists.

k. System Connectivity Display and Link Status. Through the use of the near-real-time network display, the operator can see the entire MSE network, or by zooming in, display only that portion of the network of interest. This display also provides access to the current status of any transmission link in the system. The display is automatically updated by message traffic from the network. The various states and components of the network are displayed using:

(1) Three colors (red, green, yellow).

(2) Fixed and flashing symbols (team and link).

(3) Solid and dashed lines and symbols.

(INTENTIONALLLY BLANK)

APPENDIX B TO ENCLOSURE A

ORDERWIRE SYSTEMS

1. Orderwires. There are three TRI-TAC system orderwires: digital voice orderwire (DVOW), analog voice orderwire (AVOW), and the data orderwire (DOW).

a. These orderwires provide communications between major nodal communications facilities such as the AN/TSQ-111(V), AN/TSQ-146(V), AN/TTC-39 series, and the AN/TRC-170(V) and to stand-alone digital group multiplexer (DGM) equipment such as the TD-1234 RMC or RLGM. Unlike most tactical communications systems, TRI-TAC does not use traffic channels multiplexed within groups to provide orderwires. Rather, orderwires are frequency or time division multiplexed along with a digital transmission group (DTG).

b. In addition to the orderwires listed above, there are other voice orderwires. Generally, these orderwires are compatible only with themselves and cannot interoperate with other equipment. They are as follows:

(1) Tropo-satellite support radio (TSSR) link orderwire.

(2) Ground mobile forces (GMF) tactical satellite (TACSAT) frequency modulated, no secure orderwires, ANDVT 2.4 Kbps orderwire, and RT-1287 nonsecure orderwire.

(3) AN/TAC-1 fiber optic cable orderwire.

c. The TRI-TAC and GMF equipment also provide a DOW. The DOW operates at 2 Kbps and is a full duplex digital circuit that is normally secured by the KG-84(V). The DOW is used to report data to the AN/TSQ-111(V) CNCE. (The CNCE is only employed by USAF reserve units.)

2. Digital Voice Orderwire

a. The DVOW operates at a 16-Kbps data rate and is a four-wire, full duplex digital circuit secured by the KY-57 or KY-58 VINSON. Although the DVOW interface is full duplex, the operation is half duplex; i.e., the VINSON is used in a push-to-talk mode. The DVOW is a party-line network where one station talks and all other stations listen. There can be up to 16 stations on a

DVOW channel because there are 16 unique digital ring codes. The DVOW can be transmitted over the following facilities:

(1) A repeated M-1023 low speed cable driver modem (LSCDM) or MD-1024 high speed cable driver modem (HSCDM) cable system, operating at any valid data rate. The cable system may pass data at any data rate. The DVOW is time division multiplexed into the data stream.

(2) An MD-1026 group modem (GM) conditioned diphase cable system, operating at data rates equal to or greater than 256 Kbps. When the GM is carrying the DVOW, it multiplexes the 16-Kbps DVOW with the 2-Kbps DOW into a 32-Kbps data stream. The combined orderwire (DVOW and DOW) is modulated on the DTG.

(3) A CNCE conditioned diphase cable system when the DTG is operated at data rates greater than or equal to 256 Kbps. Operation is similar to that of the MD-1026 system.

(4) A Phase II GMF TACSAT TD-1337 conditioned diphase cable system when the DTG is operated at data rates greater than or equal to 256 Kbps. Operation is similar to that of the MD-1026 GM.

(5) A Phase II GMF TACSAT radio link using the TD-1337. The DVOW is time division multiplexed into the transmitted supergroup. When the DVOW is programmed, the transmitted supergroup is increased by 16 Kbps.

(6) A DGM transmission system (AN/TRC-173, AN/TRC-174, AN/TRC-138A, AN/TRC-175, and AN/TRC-170). The DVOW is time division multiplexed into the transmitted data stream.

(7) An RT-1462/TRC-170 TSSR link. The DVOW is an integral part of the baseband signal that modulates the carrier.

(8) An AN/TAC-1 fiber optic link. The DVOW is time division multiplexed into the transmitted data stream.

b. The DVOW can be terminated in the following equipment:

(1) C-10716 OCU-I (component of the AN/TSQ-146(V), AN/TRC-173, and AN/TRC-174).

(2) C-10717 OCU-II (component of the AN/TTC-39 series, AN/TRC-138A, and AN/TRC-175).

(3) C-11643 OCU-III (component of the AN/TYQ-30 CSCE).

(4) AN/TSQ-111(V).

(5) TD-1337 (component of the AN/TSC-85B, 93B, 94A, and 100A).

(6) Tropo orderwire control unit (TOCU) (component of the AN/TRC-170(V)).

(7) MD-1270 Communications Modem (part of AN/TTC-48 EAC SENs and other MSE assemblages).

3. Analog Voice Orderwire. The AVOW is a 3-kHz, four-wire, full-duplex nonsecure orderwire. The AVOW uses in-band tone signaling (1,600 Hz tone) for ring detection and generation.

a. The AVOW can be transmitted over the following facilities:

(1) Repeated LSCDM or HSCDM cable system. Both the AVOW and DVOW can be transmitted simultaneously.

(2) GM MD-1026 dipulse cable system.

(3) GM MD-1026 conditioned diphase cable system. If the AVOW is enabled on the GM DIPHASE B card, the DVOW on that DTG cannot be used.

(4) RT-1462/TRC-170 TSSR link.

(5) AN/TAC-1 fiber optic link.

(6) CNCE conditioned diphase cable link.

(7) CNCE dipulse cable link.

b. The AVOW can be terminated in the following equipment:

(1) C-10716 OCU-I, C-10717 OCU II, or C-11643 OCU III.

(2) AN/TSQ-111(V).

(3) Analog orderwire control unit (AOCU) (part of AN/TRC-170(V)).

(4) TS-3647 cable orderwire unit (COU). This unit interfaces with the TD-1218 LSPR, TD-1219 HSPR, TD-1233 RLGM, TD-1234 RMC, or AN/TAC-1 to provide an AVOW termination.

(5) MD-1270 control modem (CM) (component of the EAC SEN and other MSE assemblages).

4. DOW

a. TRC-TAC equipment (and Air Force GMF TACSAT terminals) provide a DOW. The DOW is used to report communications equipment support element (CESE) telemetry data, as specified in ICD-001A.

(1) The DOW is a 2-Kbps data stream, normally secured by the KG-84A or KG-84C general purpose encryption equipment (GPEE), that is combined with the DVOW for transmission. The 2 Kbps data stream contains 13 subchannels; each subchannel supports the telemetry for one channel.

(2) The 2-Kbps DOW data are either time division multiplexed with the DTG or multisampled at a 16-Kbps rate and combined with the 16-Kbps DVOW.

(3) Up to 14 DOW channels can be time division multiplexed into two 16-Kbps data channel multiplexer (DCM) channels when the DVOW multiplex (MUX) group is used.

(4) All DGM (and Air Force GMF terminals) transmission systems can report failures of their internal equipment via the DOW as shown in Table A-B-1.

(a) The status messages identify the failed equipment within an assemblage, but do not indicate the nature of the failure. For example, a radio assemblage will report that a receiver has a fault but cannot determine if the local receiver or the distant transmitter has failed.

(b) Additionally, the bit error rate (BER) threshold for selected systems can be specified and monitored to assess the quality of selected radio paths.

Table A-B-1. DOW Telemetry Alarms by Assemblage

Alarm Word	TRC 138A	TRC 170	TRC 173	TRC 174	TRC 175	Alarm Word	TRC 138	TRC 170	TRC 173	TRC 174	TRC 175
RCVSA1	X		X	X	X	TGM		X			
RCVSA2	X			X	X	TGM1			X		
RCVSA3	X					TGM2			X		
RCVR	X	X				MGMSA1	X				X
RCVRS1	X		X	X	X	MGMSA2					X
RCVRS2	X			X	X	MGMFS1	X				X
Alarm Word	TRC 138A	TRC 170	TRC 173	TRC 174	TRC 175	Alarm Word	TRC 138	TRC 170	TRC 173	TRC 174	TRC 175
RCVRS3						MGMFS2					X
GMSA	X	X				HCDSA1	X				X
GMSA1	X		X	X	X	CDSA2					X
GMSA2	X		X		X	HCDLS1	X				X
GMSA3					X	HCDLS2					X
GMSA4/5/6					X	RCDSA1			X		
GMLS		X				RCDSA2			X		
GMLS1	X		X	X	X	RCDLS1			X		
GMLS2	X		X		X	RCDLS2			X		
GMLS3					X	OCU	X		X		X
GMLS4/5/6					X	VOCU		X			
XMTR		X				DLED	X	X	X		X
XMTR1	X				X	TED1		X	X		
XMTR2	X				X	TED2		X	X		
XMTR3	X					LGM1		X			
LCDSA		X				LGM2		X			
LCDSA1			X	X		ANT		X			
LCDSA2			X	X		FROSTD		X			
LCDSA3				X		SHELT		X			
LCDLS		X				LVPS	X				
LCDLS1			X	X		TC		X			
LCDLS2			X	X		MAJOR	X	X	X	X	X
LCDLS3				X							

Table A-B-2. Example of DOW Telemetry Messages

Character	Normal Condition	Up to Seven Alarms				Over Eight Alarms
1	STX	STX	FF	FF	FF	STX
2	S	S	S	S	S	S
3	0	0	0	0	0	0
4	2	2	2	2	2	2
5	P	E	E	E	E	E
6	*	*	*	*	*	*
7	*	G	G	X	M	M
8	*	M	M	M	G	A
9	*	L	S	T	M	J
10	*	S	A	R	F	O
11	*	1	3	2	S	R
12	*	*	*	*	1	*
13	*	G	R	D	*	M
14	*	M	C	L	*	A
15	*	L	V	E	*	J
16	*	S	S	D	*	O
17	*	2	A	*	*	R
18	*	*	1	*	*	*
19	ETX	*	*	*	ETX	ETX
20	ETB	ETB	ETB	ETB	ETB	ETB

(c) Although the DOW channel operates as a full duplex, digital circuit, the telemetry flow is unidirectional, from the reporting equipment to the node with no response or acknowledgments required. The format of the telemetry messages is prescribed in ICD-001A. The messages are transmitted in a block of 20 ASCII characters with a maximum of four blocks per message. Table A-B-2 provides an example of ICD-001A telemetry messages.

(d) In the original TRI-TAC architecture, the DOW telemetry data were sent to and processed by the AN/TSQ-111 CNCE at the node to provide near-real-time status displays and reporting on transmission facilities.

b. Equipment such as the AN/TSQ-146(V) and AN/TRC-170(V) report failures of their internal equipment to the CNCE. The status messages identify

the failed equipment within an assemblage, but do not indicate the nature of the failure. In addition, the CESE telemetry messages are used to report BER. These messages are used by the CNCE to monitor the status of radio equipment located at its node. The TRI-TAC and GMF data orderwires do not normally use traffic channels multiplexed within groups to provide the data orderwire. Rather, the data orderwire is normally combined with the DVOW and superimposed on the DTG.

(1) In the CNCE, the DOW is secured by the KG-82 loop key generator (LKG), which is compatible with the KG-84A. Although the DOW interfaces are full duplex, the telemetry signal is one way only because reports are sent to the CNCE with no response from the CNCE. The CNCE also provides two additional types of orderwire. The first type is teletypewriter data (ASCII or Baudot). The second type, adjacent CNCE, is used for CNCE out-of-service analog test (OSAT) coordination between two CNCEs.

(2) The CESE telemetry messages follow the format described in ICD-001A. In most assemblages, an incoming CESE telemetry message may be demultiplexed and local telemetry from the assemblage inserted and combined into the 2 Kbps data stream. This stream is sent to the CNCE. The telemetry DOW can be transmitted over the following facilities:

(a) A repeated MD-1023 LSCDM cable system. The cable system may be passing data at any data rate. In this case, the DOW is time division multiplexed into the data streams.

(b) An MD-1026 GM conditioned diphase cable system when the DTG is operated at data rates equal to or greater than 256 Kbps. When the GM is carrying the DOW, it multiplexes the 2-Kbps DOW with the 16-Kbps DVOW into a 32-Kbps data stream. In this combined data stream the bits alternate between the DVOW and DOW. Before combination with the DVOW, the DOW is gated (EXCLUSIVE OR) with an 8-kHz clock. Therefore, the DOW is transmitted redundantly. The combined orderwire (DVOW and DOW) is frequency modulated along the DTG. If the combined digital orderwire is chosen in an MD-1026 conditioned diphase module, the AVOW capability through that module cannot be used.

(c) A CNCE conditioned diphase cable system when the DTG is operated at data rates greater than or equal to 256 Kbps. Operation is similar to that of the MD-1026 system.

(d) An AN/TTC-39 series conditioned diphase cable system when the DTG is operated at data rates greater than or equal to 256 Kbps. Operation is similar to that of the MD-1026 system.

(e) A TD-1337 conditioned diphase cable system when the DTG is operated at data rates greater than or equal to 256 Kbps. Operation is similar to that of the MD-1026 system.

(f) A Phase II GMF terminal satellite link using the TD-1337. The DOW is included in the 8-Kbps overhead of the transmitted supergroup. The output supergroup rate is the sum of all active groups, the optional 16-Kbps DVOW, and the 8 Kbps overhead.

(g) An AN/TRC-170(V) tropo link. The DOW is time division multiplexed into the transmitted data stream by the tropo modem.

c. The CESE telemetry DOW is received and processed by the Communications Interface Controller (CIC) of the CNCE. Note that the C-10717 OCU-II located in the AN/TTC-39 series accepts telemetry from other assemblages and multiplexes them into two 16-Kbps streams. No local telemetry is inserted by the OCU-II in the AN/TTC-39 series. The CESE telemetry DOW can be generated by the following equipment:

(1) C-10716 OCU-I (part of the AN/TSQ-146(V), AN/TRC-173, and AN/TRC-174).

(2) C-10717 OCU-II (part of the AN/TRC-138A and AN/TRC-175).

(3) TD-1337 tactical satellite signal processor (TSSP) (part of the AN/TSC-94A and 100A).

(4) Alarm monitor (part of the AN/TRC-170(V)).

5. C-10716/TRC OCU Type I (OCU-I). The OCU-I provides the orderwire termination in the AN/TRC-173, AN/TRC-174, and AN/TSQ-146. It provides terminations for DVOW, AVOW, and DOW. In the AN/TRC-173 and AN/TRC-174, the OCU-I also provides the timing source for the van.

a. DVOW

(1) The OCU-I can terminate up to six DVOW channels. The DVOW channels are patched from the transmission system to the orderwire control unit (OCU). In the AN/TRC-173 and AN/TRC-174, these DVOW channels can be from the GM, LSCDM, and MD-1065 radio modem (RM).

(2) The OCU-I can generate the DVOW ring codes and can be set to the ring when receiving one of the 16 codes. It has three options for each of the six DVOW channels.

(a) TERMINATE. In this mode, the OCU-I serves as one end of the orderwire channel. Calls can be received or placed on the channel.

(b) MATRIX. In this mode, the OCU-I connects one channel to another. This creates a private channel and allows signaling and voice to pass through the OCU-I. The OCU-I will still detect its own ring code on a matrixed connection, but cannot monitor the matrixed connection.

(c) BRIDGE. This mode connects the channel to the bridge. Up to six orderwire channels plus the local orderwire operator may be bridged into a party-line conversation.

b. AVOW

(1) The OCU-I can terminate up to six AVOW channels. The AVOW channels are patched from the transmission systems to OCU. In the AN/TRC-173 and AN/TRC-174, these AVOW channels can originate from the MD-1026 GM and the MD-1023 LSCDM.

(2) The OCU-I can generate the 1600-Hz ring tone for signaling. It has two options for each of the six AVOW channels.

(a) TERMINATE. In this mode, the OCU-I serves as one end of the orderwire channel. Calls can be received and placed on the channel.

(b) BRIDGE. This mode connects the channel to the bridge. Up to six orderwire channels plus the local operator may be bridged into a party-line conversation.

c. DOW. The OCU-I has the following capabilities:

(1) When operating in a terminal, the OCU-I monitors the internal equipment and inserts the telemetry alarm information into the 2-Kbps DOW channel. The alarms are inserted into the subchannel programmed on the A13 CCA.

(2) When operating in a relay (and the telemetry decombiner is enabled), the OCU-I decrypts and demultiplexes the incoming 2-Kbps DOW data, inserts the telemetry alarm information for this assemblage into the subchannel programmed on the A13 CCA, and reencrypts the DOW for further transmission.

d. Assemblage Timing from the OCU-I

(1) The OCU-I provides timing for the AN/TRC-173 and AN/TRC-174. The OCU-I has two timing options: Master or Slave.

(a) In the Master mode, the OCU-I uses its internal crystal oscillator to provide timing to the OCU and the assemblage. The oscillator accuracy is 1×10^{-5} (±10 parts per million) and should be used only for self-test or assemblage checkout. In network applications, the OCU should receive slave timing from a more accurate timing source; e.g., AN/TTC-39 series or AN/TRC-170.

(b) In the Slave mode, the OCU-I recovers timing from a DVOW channel. The incoming DVOW channels must be patched from the incoming DTGs to the OCU DVOW channels. The desired DVOW channel is selected by the Timing Select thumbwheel on the front cover of the OCU. The primary timing source should be patched to DVOW channel 1 and the secondary timing source to DVOW channel 2 to standardize the timing setup for all vans.

(c) In either timing mode, the OCU-I can provide timing to the other components in the shelter. The Group 1 and Group 2 thumbwheels are used to get the output group rates for the timing source output jacks for system 1 and 2 respectively. The selected group rate is synthesized and sent to the timing source ports, and may be used to provide BLACK station clock (BSC) to the trunk encryption device (TED) or station clock to a TGM.

(2) The AN/TRC-174 is normally employed as a terminal at a node and receives timing from an incoming DTG from an AN/TTC-39A(V)1 or AN/TTC-39D. When used as a relay, the AN/TRC-174 normally recovers timing from the DVOW channel of an incoming radio system. The AN/TRC-173 is normally used as a terminal and recovers timing from the DVOW channel of the incoming radio system.

6. C-10717 OCU Type II (OCU-II). The OCU-II provides the orderwire capability in the AN/TRC-138A, AN/TRC-175, AN/TTC-39A(V)1, AN/TTC-39A(V)4, and AN/TTC-39D. It provides terminations for the DVOW, AVOW, and DOW. In the AN/TRC-138A and AN/TRC-175, the OCU also provides a timing source for the van.

a. DVOW

(1) The OCU-II can terminate up to 13 individual DVOW channels. These DVOW channels are patched from the transmission systems to the OCU. In the AN/TRC-138A and AN/TRC-175, the DVOW channels can be from the MD-1026 GM, MD-1024 HSCDM, TD-1237 MGM, or AN/GRC-222 radio. The OCU-II can also multiplex up to 12 DVOW channels into a single group for transmission on the master group multiplexer (MGM).

(2) The OCU-II can generate the 16 DVOW ring codes and can be set to ring receiving one of the 16 codes.

(a) TERMINATE. See subparagraph 5a(2)(a).

(b) BRIDGE. See subparagraph 5a(2)(c).

b. AVOW

(1) Like the OCU-I, the OCU-II can terminate up to six AVOW channels. The AVOW channels are patched from the transmission systems to the OCU. In the AN/TRC-138A and AN/TRC-175, these AVOW channels can be from the MD-1026 GM, MD-1024 HSCDM, and the AN/GRC-222 radio.

(2) Also like the OCU-I, the OCU-II can generate the 1,600 Hz signaling ring tone and has the same TERMINATE and BRIDGE options.

c. DOW. If the OCU-II is properly programmed and patched, the following capabilities are provided.

(1) Terminal. The OCU-II monitors the internal equipment (as shown in Table A-B-1) and inserts the telemetry alarm information into the 2-Kbps DOW channel. The alarms are inserted into the subchannel programmed on the A18 CCA.

(2) Relay (Telemetry Decombiner is Enabled). The OCU-II decrypts and demultiplexes the incoming 2-Kbps DOW data, inserts the telemetry alarm information for this assemblage into the subchannel programmed on the A18 CCA, and reencrypts the DOW for further transmission.

d. Assemblage Timing from the OCU-II

(1) AN/TTC-39A(V)1/D. Because these switches have a rubidium standard timing source, the OCU-II is not used as a timing source. NOTE: The OCU-II in the switch must have the TIMING SELECT thumbwheel set to "G" and the GP-1 thumbwheel set to "4" to provide a timing reference to the DVOW channels for the outgoing DTGs.

(2) AN/TRC-138A and AN/TRC-175. The OCU-II provides timing for the AN/TRC-138A and AN/TRC-175. It has the same Master and Slave timing options as the OCU-I.

(a) Master Mode. Same as OCU-I (see subparagraph 5d(1)(a)).

(b) Slave Mode. The OCU-II can recover timing from either an incoming DTG or from an incoming DVOW channel.

1. If the OCU-II is set to recover timing from an incoming DTG, that group must be unencrypted and patched to the OCU; the OCU TIMING SELECT thumbwheel is set to "G," and the GROUP I thumbwheel on the A12 circuit card must be set for the incoming group rate. This allows the OCU to synthesize the required frequencies. The OCU-II can also recover timing from the DVOW multiplex group; in this case, the thumbwheel must be set to "D." GM Group 1 must be used to recover timing.

2. If the OCU-II is set to recover timing from an incoming DVOW channel, it must be patched from the incoming DTG to the OCU DVOW channel. The desired DVOW channel is selected by the TIMING SELECT thumbwheel on the front panel. The primary timing soure should be patched

to DVOW channel 1 and the secondary timing source to DVOW channel 2 to standardize the timing setup for all vans.

(c) See subparagraph 5d(1)(c).

(3) The AN/TRC-175 is normally employed as the bottom of hill (BOH) terminal. The MGM is used to multiplex the multiple DTGs from the switch and send them to the top of hill (TOH) using either AN/GRC-222 SRWBR or HSCDM. The AN/TRC-175 will normally recover timing from one of the incoming DTGs from the AN/TTC-39A(V)1 or AN/TTC-39D. Because the AN/TRC-175 has a limited number of incoming groups that are capable of providing the DVOW, only the first group of each MD-1026 GM appears on the DVOW patch panel.

(4) The AN/TRC-138A is employed at the TOH node to terminate the MGM link from the AN/TRC-175 and to act as a terminal for the backbone Army echelons above corps (EAC) transmission network. It can also be used as a relay and normally recovers timing from the DVOW channel of an incoming radio system.

7. C-11643/TRC OCU Type III (OCU-III). The OCU-III provides the orderwire termination in the AN/TYQ-30 Communications Systems Control Element (CSCE). It provides terminations for DVOW, AVOW, and DOW and a timing source for the van.

a. DVOW

(1) The OCU-III can terminate up 13 individual DVOW channels. Twelve of these channels are selected from up to three DVOW multiplexed groups and the thirteenth is patched separately. Table A-B-3 shows the DVOW channel is selected by the thumbwheel setting on the A12 CCA (SEL 1).

(2) See subparagraph 5a for the other DVOW capabilities of the OCU-III, which are the same as the OCU-I.

b. AVOW. See subparagraph 6b.

c. DOW. Up to six 16-Kbps DCM channels (two in each of the three multiplexed DVOW groups) are accessible via a multipin connector on the back of the OCU-III. There is no equipment in the CSCE to demultiplex the 16-Kbps

Table A-B-3. OCU-III DVOW Settings

Position	Group 1	Group 2	Group 3
1	11, P	1-10	--
2	9-11, P	1-8	--
3	7-11, P	1-6	--
4	5-11, P	1-4	--
5	3-11, P	1-2	--
6	11, P	5-10	1-4
7	11, P	3-10	1-2
8	9-11, P	5-8	1-2
9	9-11, P	3-8	1-2
10	7-11, P	3-6	1-2
11	5-11, P	3-4	1-2
12	1-11, P	--	--

DCM channels, decrypt the individual 2-Kbps DOW channels, demultiplex the 2-Kbps DOW channels, or process the telemetry data from the DGM assemblages.

8. RT-1462/TRC-170 (TSSR) Orderwire. The TSSR provides a nominal 3 kHz orderwire channel (with signaling) between the ends of the radio link. This orderwire can be used only between the ends of the TSSR link and will not interoperate with the other orderwires. NOTE: The TSSR will transmit the AVOW, DVOW, and DOW orderwires multiplexed on a TRI-TAC DTG. No access to these orderwires is provided at the TSSR.

9. AN/TAC-1 Orderwire. (See paragraph 5, Enclosure E.)

10. AN/TSQ-146(V) Multiplexer Terminal Orderwire

a. C-10716/TRC (OCU-I) Voice Orderwire. The OCU-I provides the orderwire termination in the AN/TSQ-146(V). It provides termination for DVOW, AVOW, and DOW and can perform the following tasks.

(1) Terminate the Channel. In this mode, the OCU-I serves as one end of the orderwire channel. Calls can be received and placed on the channel.

(2) Connect the Channel to Another Channel. This creates a through channel and allows signaling and voice to pass through the OCU-I. The OCU-I will monitor the line and detect its own ring code on this channel.

(3) Connect the Channel to the Digital Bridge. Up to six orderwire channels plus the local operator may be bridged into a party-line conversation.

b. OCU-I AVOW Termination in the AN/TSQ-146(V). The OCU-I can control six nonsecure AVOW channels. These channels are selected (via patching) from the MD-1026 diphase or dipulse modem modules or the MD-1023 LSCDMs. The operator has two modes of operation for each of the six channels: TERMINATE and BRIDGE.

(1) In the TERMINATE mode, one end of the orderwire channel is terminated at the OCU-I. The operator can place or receive calls on the channel. Signaling is 1,600 Hz and nonselective. If there is more than one other station on the channel, all stations will ring.

(2) In the BRIDGE mode, up to six orderwire channels and the OCU-I operator are connected to an analog bridge. This permits a party-line conversation on all of the bridged orderwire channels at once.

c. C-10716/TRC (OCU-I) Data Orderwire

(1) The AN/TSQ-146(V) provides a 2-Kbps data orderwire via the C-10716 OCU-I. The OCU-I is a shelter-mounted unit that accepts status alarms from internal equipment. This equipment includes individual units of GFE modems, GFE multiplexers, and COMSEC equipment. The AN/TSQ-146(V) does not report BER or link quality. The OCU-I forms a telemetry message suitable for transmission over the data orderwire channel to the CNCE. In the AN/TSQ-146(V), the OCU-I is used in either Mode 1 (End of Link (EOL) mode) or Mode 2 (Relay or Thru mode).

(2) In Mode 1, local telemetry data from up to 56 internal sources are inserted into one of 13 subchannels. The specific subchannel is controller selectable. The 2-Kbps signal is encrypted by KG-84A #2 and then transmitted to the CNCE via the MD-1026 group modem or MD-1023 LSCDM. (See Figure A-B-1.) In Mode 2, through telemetry from up to 12 additional radios or terminals is decrypted by a KG-84(V) (#1) and decombined into 150 bps subchannels by TD #1. Local telemetry data are inserted into a telemetry

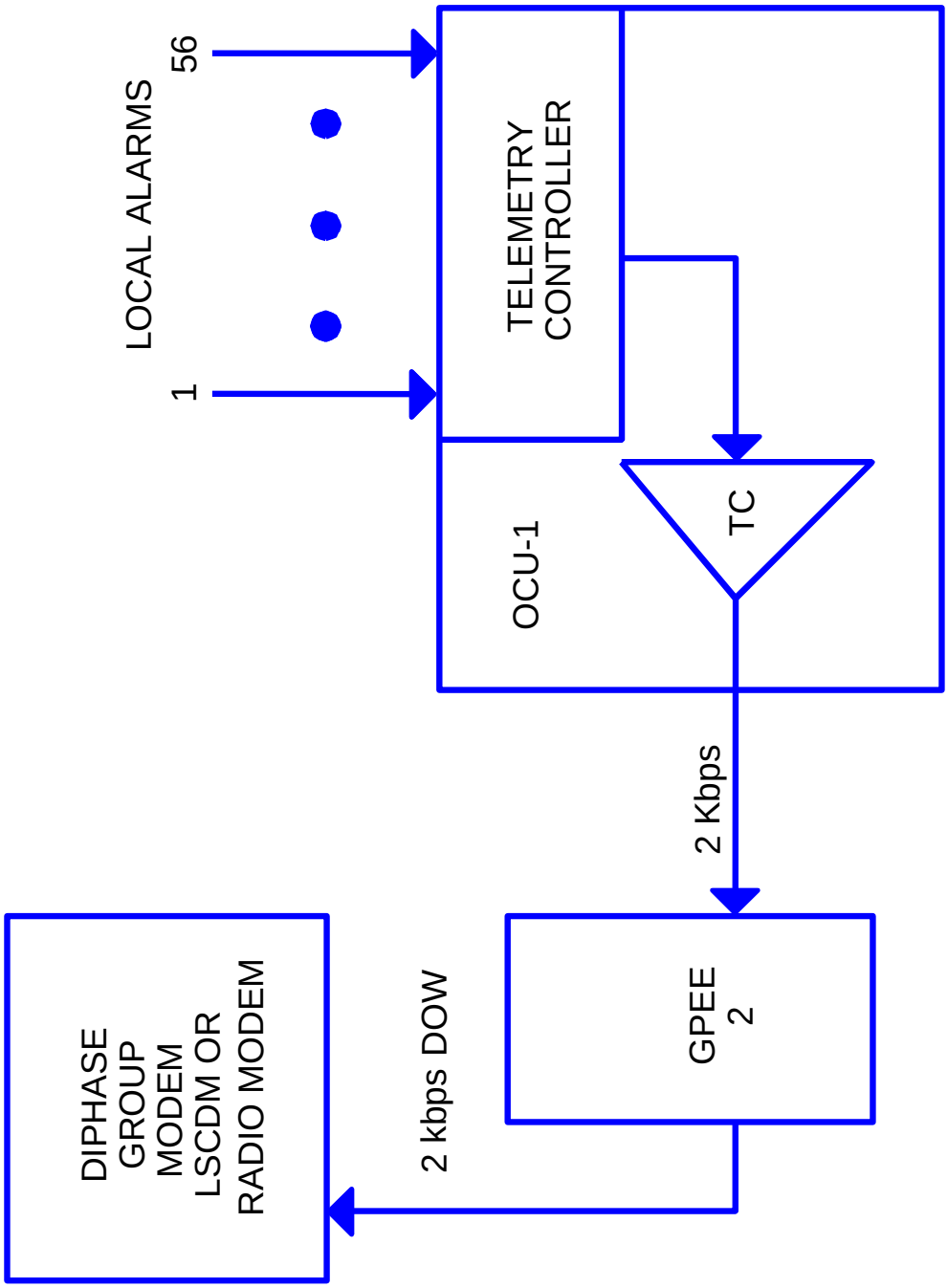

Figure A-B-1. Multiplexer Terminal Telemetry Operation (EOL Mode)

combiner subchannel along with the through telemetry. As in Mode 1, the specific subchannel is controller selectable. The telemetry signals are multiplexed to 2-Kbps and encrypted by KG-84(V) #2. The 2-Kbps signal is then transmitted to the CNCE via the MD-1026 GM or MD-1023 LSCDM. (See Figure A-B-2).

11. AN/TSQ-111(V) CNCE Orderwire System

(1) AN/TSQ-111 Voice Selection Panel. The VSP provides the CNCE controller with access to all voice orderwire circuits, both incoming and outgoing. The VSP permits entry of the digital code number or tone frequency for ringing outgoing calls. The CNCE controller is notified of incoming calls. Up to three digital code words per CNCE may be selected for detection as an incoming request for communications. Calls may be placed on hold or disconnected. Two controller headsets are provided with the voice orderwire control unit at the VSP; these headsets permit simultaneous operation of the same function (nonsecure AVOW, PARKHILL, or VINSON) or of the same function and circuit.

(2) AN/TSQ-111 Digital Voice Orderwire. Twelve digital voice orderwire circuits may be terminated at the VSP. The KY-58 VINSON provides security for these circuits. DVOW is provided by the diphase group modem at group rates at and above 256 Kbps. A LSCDM also provides DVOW. Up to three of the standard DVOW ring codes are entered into the VSP. Detection of any of these ring codes is interpreted as a request for communications. On outgoing calls, the digital ring code is entered along with the circuit number to selectively signal any party on that circuit. A digital circuit can be set up between the CNCE and two external parties. The call is established and terminated via front panel controls at the VSP. Both controllers may communicate on the conference call with the two external parties.

(3) AN/TSQ-111 to AN/TSQ-111 Dedicated. A CNCE-to-CNCE dedicated DVOW may be established through use of a traffic channel in a digital group. The channel reassignment function in the CNCE reassigns the traffic channel to a special loop modem channel designated for DVOW. Up to eight of these in-band circuits may be used.

(4) AN/TSQ-111 Analog Voice Orderwire. Fourteen nonsecure (either two-wire or four-wire) and 12 secure (four-wire) analog voice orderwire circuits may be terminated at the VSP. The KY-75 PARKHILL provides security for the

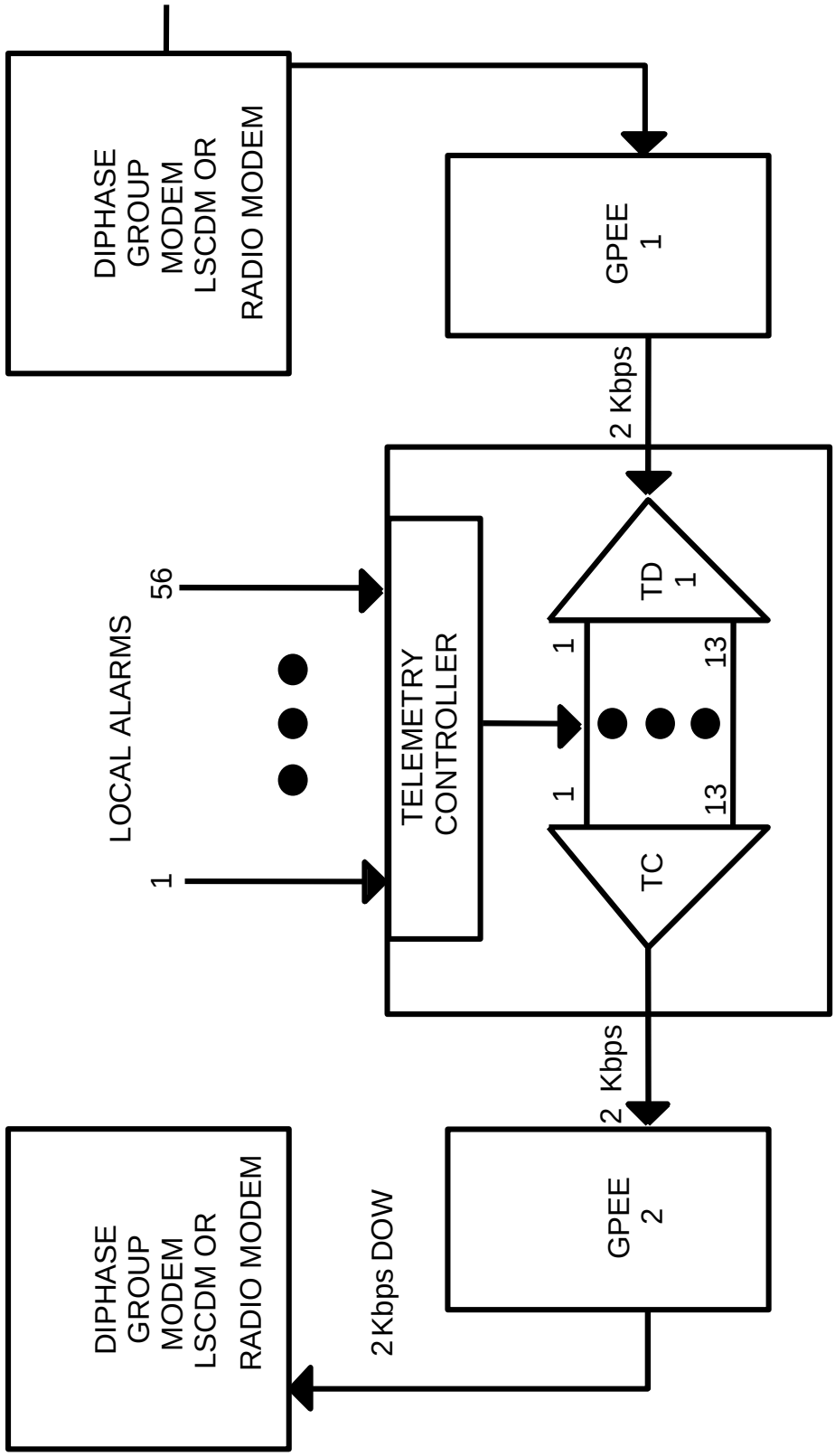

Figure A-B-2. Multiplexer Terminal Telemetry Operation (Thru Mode)

12 secure analog voice orderwire circuits. In the event that the PARKHILL is not provided, a total of 26 nonsecure AVOW circuits are available. A visual indicator is activated whenever the nonsecure analog voice orderwire is used.

b. Data Orderwire. There are three types of CNCE data orderwire: ICD-001A CESE telemetry, teletype, and adjacent CNCE protocol. These are discussed in the following subparagraphs:

(1) CNCE Processing of Telemetry. The CNCE receives CESE telemetry messages from the AN/TSQ-146(V), AN/TSC-94A, AN/TSC-100A, and AN/TRC-170(V). The CNCE also processes telemetry messages from the AN/TRC-173, AN/TRC-174, AN/TRC-175, and AN/TRC-138A. Incoming ICD-001A messages from these assemblages are processed by the CNCE in order to monitor its nodal resources. Each data orderwire channel from a diphase group modem or LSCDM is usually decrypted by an LKG (if the data orderwire has not been encrypted, a RED/BLACK isolator is necessary). Then the signal is input into one of 20 CIC serial communication channels. (See Figure A-B-3.) The CIC has the capability to process telemetry from up to nine communications channels containing a maximum of 40 telemetry subchannels.

(a) Each 2 Kbps multiplexed telemetry channel is demultiplexed into 13 subchannel by the CIC. (The CIC can also process nonmultiplexed telemetry channels, but these are less common.) Messages received on individual subchannel are transmitted to the CNCE processor when changes are detected. The controller is notified of status changes occurring at the assemblages.

(b) The CNCE does not generate its own ICD-001A telemetry messages. Rather, the CNCE has a Fault Detection Subsystem (FDS) that monitors the status of internal equipment. The controller is notified of status changes of internal equipment, but this subsystem has no relation to that of the ICD-001A CESE telemetry messages.

(2) CNCE Teletype

(a) The CNCE has the capability of processing teletype (TTY) data on any of the 20 CIC serial communications channels. These TTY data are transmitted or received from other CNCEs or system elements. These data may be ASCII (synchronous or asynchronous) or Baudot (asynchronous). Allowable TTY rates and protocol are in accordance with Table A-B-4. TTY data do not enter the CNCE via the data orderwire port of a group modem or LSCDM, but

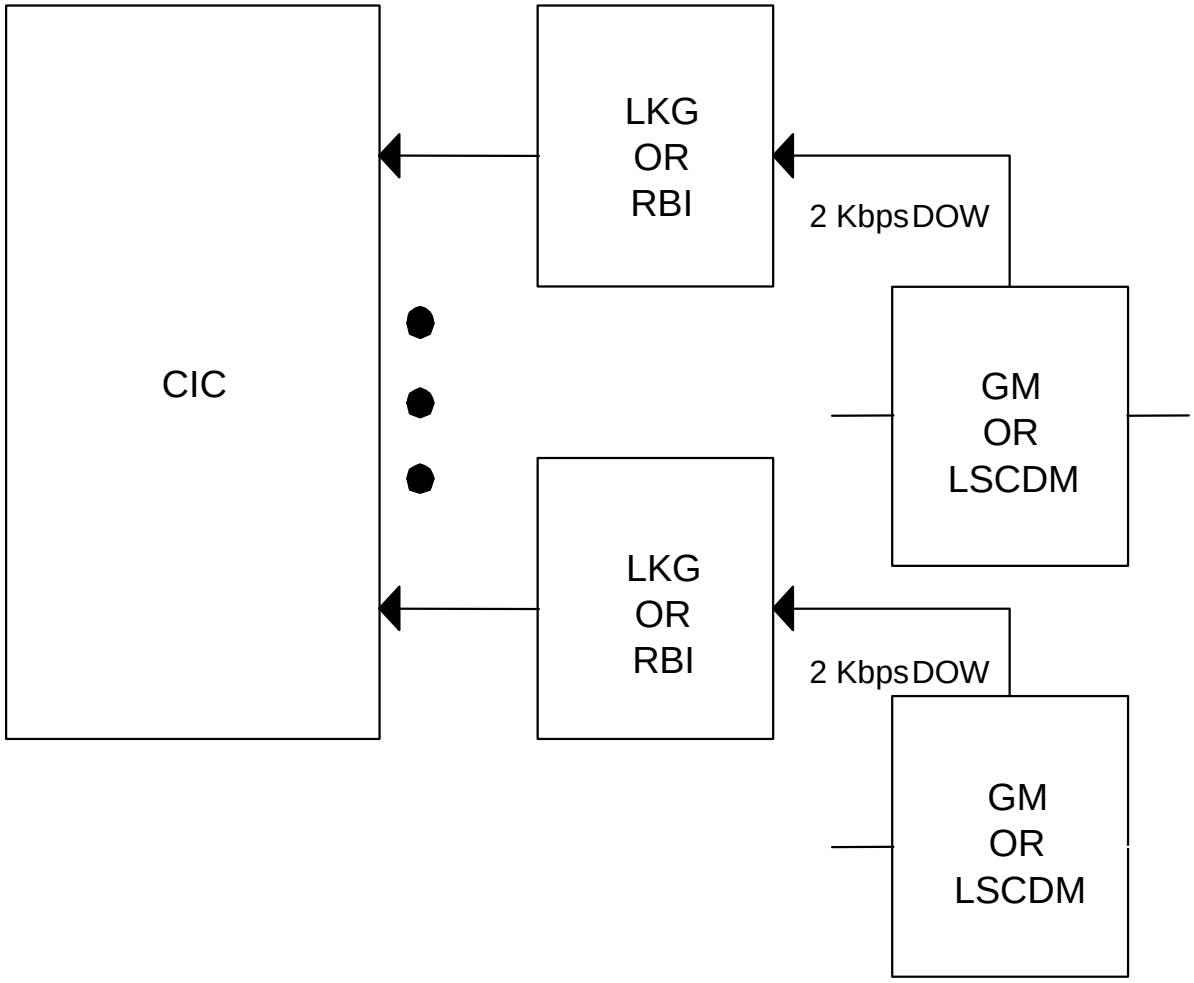

Figure A-B-3. CNCE Processing of CESE Telemetry

Table A-B-4. CNCE Teletypewriter Rates and Protocol

Data Type	Data Rates (bps)	Code Structure
Synchronous	75, 150, 300, 600, 1,200, 2,400	8-bit ASCII: 7 information bits, 1 parity bit
<u>Asynchronous</u> (with internal or external timing)	50, 75	7-bit Baudot: 5 information bits, 1 start bit, 1 stop bit
(with internal timing)	50, 75, 150, 600, 1,200	7.5 bit Baudot: 5 information bits, 1 start bit, 1.5 stop bits
(with internal or external timing)	75, 150, 300, 600, 1,200, 2,400	10-bit ASCII: 7 information bits, 1 parity bit, 1 start bit, 1 stop bit
(with internal timing)	75, 150, 600, 1,200	10.5 bit ASCII: 7 information bits, 1 parity bit, 1 start bit, 1.5 stop bits
(with internal or external timing)	75, 150	11-bit ASCII: 7 information bits, 1 parity bit, 1 start bit, 2 stop bits

via other CNCE equipment such as the Data Orderwire Diphase Modem or Voice Frequency Telegraph Keyer/Converter. It is also possible for TTY data to enter the CNCE on an overhead subchannel, be reassigned to a discrete subchannel, and then be rate converted before being connected to the CIC.

(b) Up to 20 CIC communication channels may be configured for teletype during generation of the CNCE database. (Communication channel changes may also be made online.) Teletype communication may be initiated by either the CNCE controller or a remote TTY controller. The CNCE controller is notified of TTY communication requests from the remote TTY via VDU display of the CIC channel number to which the remote TTY is connected. The request must be on a communications channel that has already been configured for TTY in the CNCE. Upon entry into the teletype mode, the VDU is divided into two portions: one for outgoing messages and the other for received data. TTY communication may be conducted over only one communications channel at a time.

(3) CNCE/Adjacent CNCE Protocol

(a) CNCE/Adjacent CNCE protocol messages are used between CNCEs for coordination of OSAT in both loopback and one-way cooperative modes and for the transfer of the associated test results. The rate and format of these messages is 150-bps character-asynchronous, 10-bit ASCII. The CNCE/Adjacent CNCE messages are used between Adjacent CNCEs on a CIC communication channel that has been configured for this protocol. Only one CIC communication channel at a time may be configured for Adjacent CNCE protocol.

(b) When cooperative automatic analog tests (AATs) are performed between adjacent CNCE AATs, one AAT is the master, and the other AAT is the slave. The master AAT performs the data collection and parameter calculation function on the circuit under test.

12. AN/TTC-39 Series CS Orderwire System

a. C-10717/TRC (OCU-II) Voice Orderwire. The OCU-II provides the orderwire termination in the AN/TTC-39 series. It provides terminations for the DVOW, AVOW, and DOW.

(1) DVOW Termination in the AN/TTC-39 Series(V)1. The OCU-II can terminate DVOW channels. These channels can be selected (via manual patching at the Engineering Orderwire Patch Panel) from any of the diphase group modems (operating at least 256 Kbps) or MD-1023 LSCDMs. Twelve DVOWs, along with two 16-Kbps DOW channels, are multiplexed in the OCU-II to form a dedicated 256-Kbps diphase group to a control facility. These signals are routed through a Cable Driver Modem group buffer to group 14 on time division switch group modified (TDSGM) #1. The OCU-II can generate the 16 DVOW ring codes and can be set to ring on one of the 16 codes. It has two modes of operation for each of the 13 DVOW channels and can perform the following tasks:

(a) Terminate the Channel. In this mode the OCU-II serves as one end of the orderwire channel. Calls can be received and placed on the channel.

(b) Connect the Channel to the Digital Bridge. Any combination of DVOW channels plus the local operator may be bridged into a multiparty conversation.

(2) AVOW Termination in the AN/TTC-39 Series. The OCU-II can terminate six AVOW channels. These channels can be selected (via manual patching at the Engineering Orderwire Patch Panel) from any of the dipulse or diphase modems or LSCDMs. It has two modes of operation for each of the six AVOW channels. It can perform the following:

(a) Terminate the Channel. In this mode the OCU-II serves as one end of the orderwire channel. The operator can place or receive calls on the channel. Signaling is 1,600 Hz and nonselective. If there is more than one other station on the channel, all stations will ring.

(b) Connect the Channels to the Analog Bridge. Any combination of AVOW channels plus the local operator may be bridged into a multiparty conversation.

b. Data Orderwire. The data orderwire function of the AN/TTC-39 series differs from that of other equipment. There is no capability in the AN/TTC-39 series to collect status reports from internal equipment and format them into an ICD-001A message. Rather, the AN/TTC-39 series contains an OCU-II that is used to accept and multiplex telemetry from other assemblages. The data orderwire channels of the first seven group modems of each TDSGM (DTGs

1 to 7 and 16 to 22) are hardwired to the OCU-II. The OCU-II multiplexes these fourteen 2-Kbps channels into two 16-Kbps channels via two DGMs located with the OCU-II. No local telemetry is inserted. The two 16-Kbps channels, along with the twelve 16-Kbps DVOW channels, are multiplexed into a Type 1 MSF group that is connected to DTG #14. This 16-channel, 256-Kbps group is passed to a CNCE or Army CSCE.

13. AN/TRC-170(V) Orderwire. The AN/TRC-170(V) can terminate both the AVOW and DVOW. The physical selection of AVOW or DVOW for the diphase group modem modules is made at the group modem. For each modem module, one or the other may be chosen, but not both. The switch is placed in "system" to select DVOW or in "maintenance" to select AVOW. For the LSCDM, both orderwires are available simultaneously.

a. AN/TRC-170(V) TOCU. The TOCU provides the orderwire terminations for the DVOW, AVOW, and DOW. The TOCU can terminate up to five DVOW channels plus the local VINSON. Four of these channels are from the cable groups and one is from the radio. The four cable groups come from the MD-1026 GM with an option for the fourth group to come from the optional MD-1023 LSCDM. The radio channel comes from the tropo modem. All five channels are half duplex and are bridged in a digital bridge in the TOCU. A front panel switch is used to select one radio. The TOCU can generate any of the 16-DVOW signaling codes. It can be set to ring on any three of the 16 codes.

(1) The modes of operation differ primarily in the manner in that the digital bridge in the TOCU operates. The digital bridge receives a signal from one channel and transmits that signal to the other connected channels. To understand the operation of the bridge, it is easiest to think of the bridge as a digital device with seven ports. (See Figure A-B-4).

(a) Group modem module number one.

(b) Group modem module number two.

(c) Group modem module number three.

(d) Group modem module number four (or LSCDM).

(e) Tropo modem.

(f) Local VINSON.

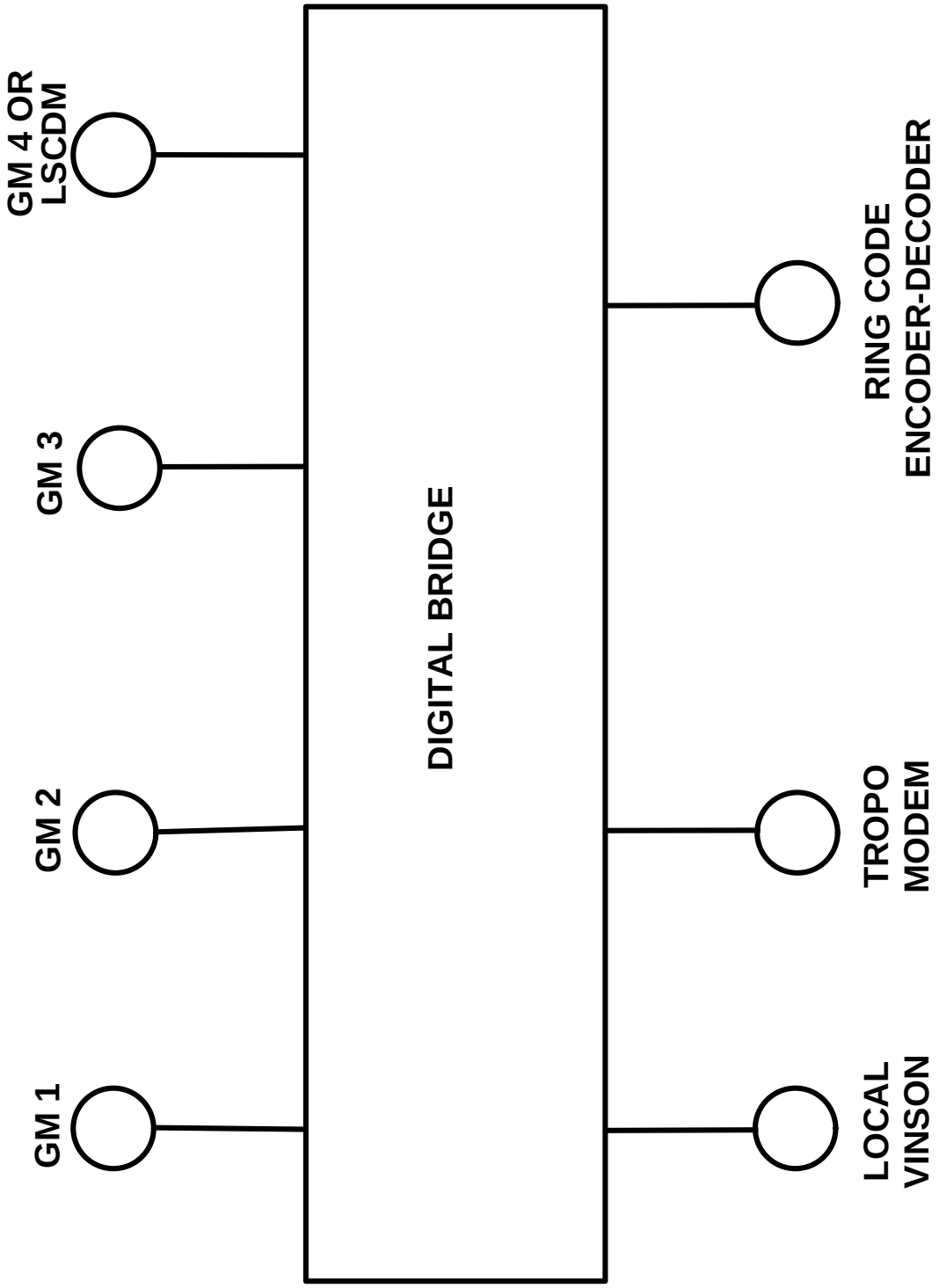

Figure A-B-4. Digital Bridge Connection in the AN/TRC-170

(g) Ring code encoder-decoder.

(2) TOCU DVOW Mode Operation

(a) Through Mode. In this mode, the TOCU connects all channels to the bridge. The first port with activity (keying the VINSON) captures the bridge, and that input is transmitted to the other ports. The TOCU bridge inhibits any traffic from the other ports until the first port ceases talking. At that time, any port may seize the bridge. This creates a network where one input can talk and all others must listen. In this mode, the TOCU can receive signaling from any of the five channels and can signal to any station on the network.

(b) Cable Mode. The digital bridge is split into two separate bridges. The local VINSON and the four cable channels are connected to one bridge, and the tropo modem and ring code encoder-decoder are connected to the second bridge. The local operator may talk to any station on the cable channels but may not talk to any station connected via the radio channel. The TOCU can ring to and receive ring from stations on the radio link, but to answer them, the operator would have to switch from the CABLE to the THROUGH or RADIO mode. In the cable mode, operators cannot signal to or receive ring from stations connected to the cable channels. If they could this would be necessary. The cable mode also inhibits stations on the cable channels from signaling to or conversing with stations connected to the radio channel. The operation of the bridge is similar to the through mode. (The first station to talk seizes the bridge.)

(c) Radio Mode. The digital bridge is also split into two separate bridges. The local VINSON and the tropo modem are connected to the same bridge, while the four cable channels and ring encoder-decoder are connected to the other. The local operator may talk to any station connected on the radio channel, but may not talk to any stations connected via the cable channels. The TOCU can ring to and receive ring from stations on the cable. To answer these calls, the operator must switch from the RADIO to the THROUGH or CABLE mode. In the radio mode, the local operator cannot ring to or receive ring from any station connected to the radio channel. (This would be unnecessary as operators would normally be on the line if they were in the radio mode.) The radio mode also inhibits stations connected to the radio channel from signaling to or conversing with stations connected to the cable channels.

b. Remote Orderwire Control Unit. Each AN/TRC-170(V) also has a remote orderwire control unit (ROCU) that allows the operator to monitor system faults and provide DVOW access. The ROCU may be located up to one-quarter of a 4 mile from the AN/TRC-170(V). DVOW calls can be made and received from the ROCU. When using the ROCU, operators should remember that the VINSON encryption device is still located in the AN/TRC-170(V). The telephone cable voice connection between the ROCU handset and the AN/TRC-170(V) is unencrypted and should be protected.

c. AN/TRC-170(V) Analog Orderwire Control Unit. The AOCU can terminate up to five AVOW channels. The channels are from the four GM modules and the LSCDM. The channels are individually selectable and cannot be bridged. The AOCU can generate the 1,600 Hz ring tone for signaling. Ring may be received on any channel even though the operator has selected a different channel.

d. AN/TRC-170(V) Data Orderwire. The AN/TRC-170(V) provides a 2-Kbps data orderwire via the alarm monitor (CESE). The CESE in the AN/TRC-170(V) collects status reports from internal equipment. This equipment includes all major equipment groups and individual units of multiplex and COMSEC equipment. The AN/TRC-170(V) also reports BER from the tropo modem. The 150-bps signal from the CESE is inserted into a subchannel of one or both telemetry combiners located within the Alarm Monitor. Through telemetry from up to 12 additional radios is decombined into 150 bps subchannels prior to being multiplexed with the local telemetry. These telemetry signals (local and through) are multiplexed to 2-Kbps by the telemetry combiner. The 2-Kbps signal is normally encrypted by a KG-84(V) and transmitted to a CNCE over cable (via diphase group modem or LSCDM) and/or over the RF path (via the tropo modem). The format of these 2-Kbps data is compatible with ICD-001A. Figure A-B-5 depicts the operation in the AN/TRC-170(V).

14. GMF Satellite Terminal Orderwire System

a. TD-1337 TSSP. The TD-1337 (part of the Phase II GMF terminals) has secure and nonsecure 16-Kbps DVOW. Both orderwires can be used on the radio link(s) but only the secure mode is compatible with the TRI-TAC DVOW. No DVOW interface is provided for the group inputs from the MD-1026 GM or the direct conditioned diphase input to the TD-1337.

(1) TD-1337 Secure DVOW Operation. The TD-1337 secure 16-Kbps DVOW is compatible with the TRI-TAC DVOW network. In order to use this

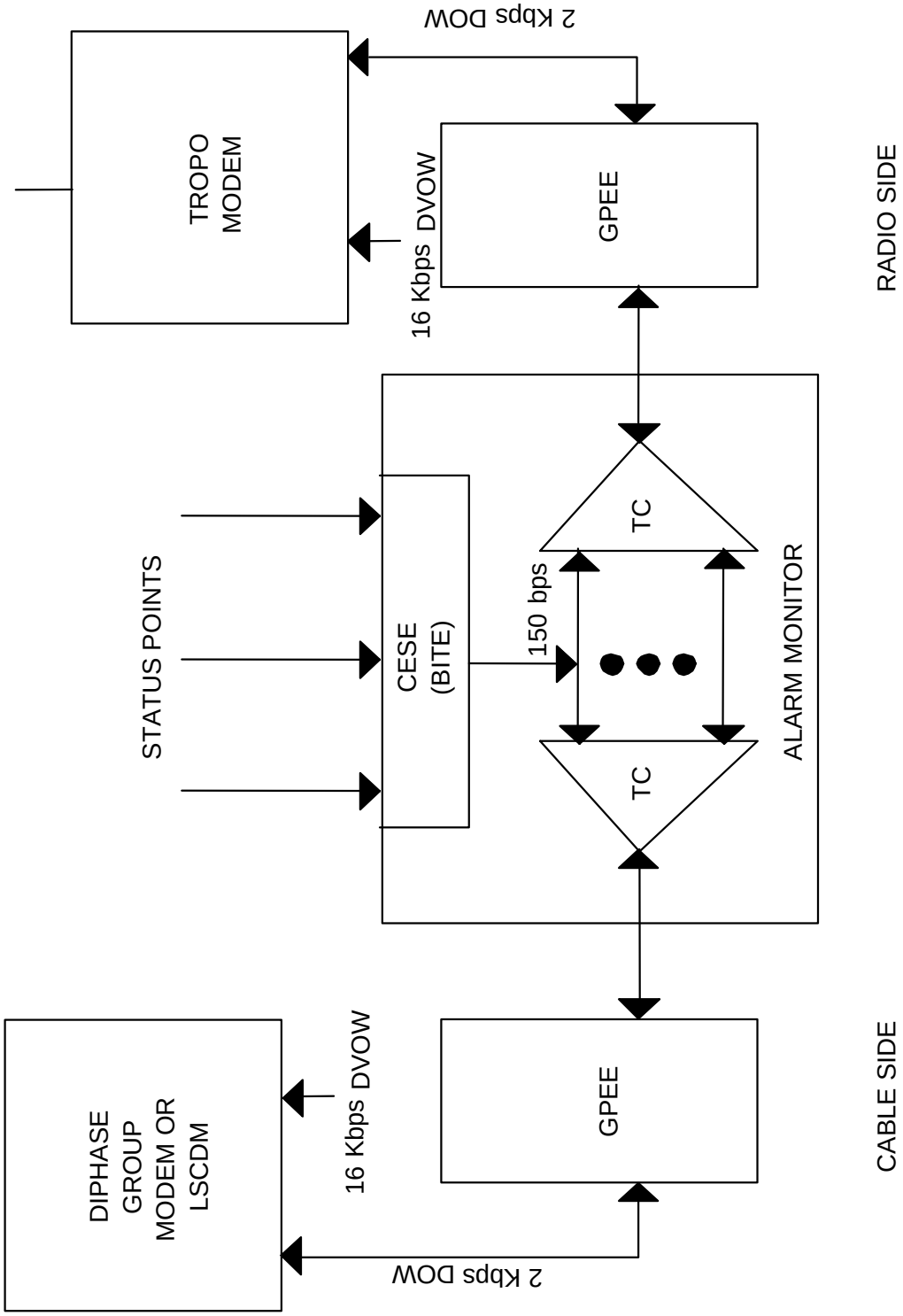

Figure A-B-5. AN/TRC-170 CESE Operation

orderwire, the orderwire information must be properly programmed into the TD-1337 database. The database entries are discussed in Appendix D. If the codes have been entered into the database, the TD 1337 can signal on any of the standard 16-DVOW ring codes. Therefore, if a GMF link is extended by an AN/TRC-170(V) link, the GMF terminals would be able to signal to only the first AN/TRC-170(V). (This should not present any difficulty, but it is different from the operation of the other TRI-TAC DVOW terminating equipment). When this orderwire is used, an additional 16 Kbps is added to the RF transmitted supergroup and the orderwire information is multiplexed with the other groups. On the line side the orderwire information is frequency modulated on the DTG. The group rate must be at least 256 Kbps to use this orderwire.

(2) TD-1337 Nonsecure DVOW Operation. The nonsecure mode of operation is exactly the same as the secure mode except that the only compatible terminal is another TD-1337. The use of this mode is not recommended.

b. RT-1287 Orderwire. The RT-1287 is an orderwire transmitter receiver supplied with the Phase I and Phase II GMF terminals. The orderwire signal is a special subcarrier transmitted along with the supergroup from the GMF terminal. The orderwire is under the direction of the GMF controllers and is not used for purposes other than satellite terminal control. The RT-1287 can be set up to provide communications between:

(1) The control terminal and a nodal terminal. (The control terminal is typically an AN/MSQ-114, while the nodal terminal is an AN/TSC-100A.)

(2) The nodal terminal and a nonnodal terminal. (This nodal terminal would typically be an AN/TSC-100A, and the nonnodal is an AN/TSC-94A.)

c. GMF Satellite Terminal (AN/TSC-94A and AN/TSC-100A) DOW. The AN/TSC-94A and AN/TSC-100A provide a limited telemetry capability. The operation in these terminals is controlled by the TSSP (TD-1337). The TSSP collects up to 56 status reports from internal equipment. The GMF terminals do not report BER or link quality.

(1) Once the TSSP collects the status reports, data are formatted in accordance with ICD-001A and transmitted at 150 bps to a KG-84(V). The 150-bps data stream is encrypted and rate converted to a 2-Kbps data stream

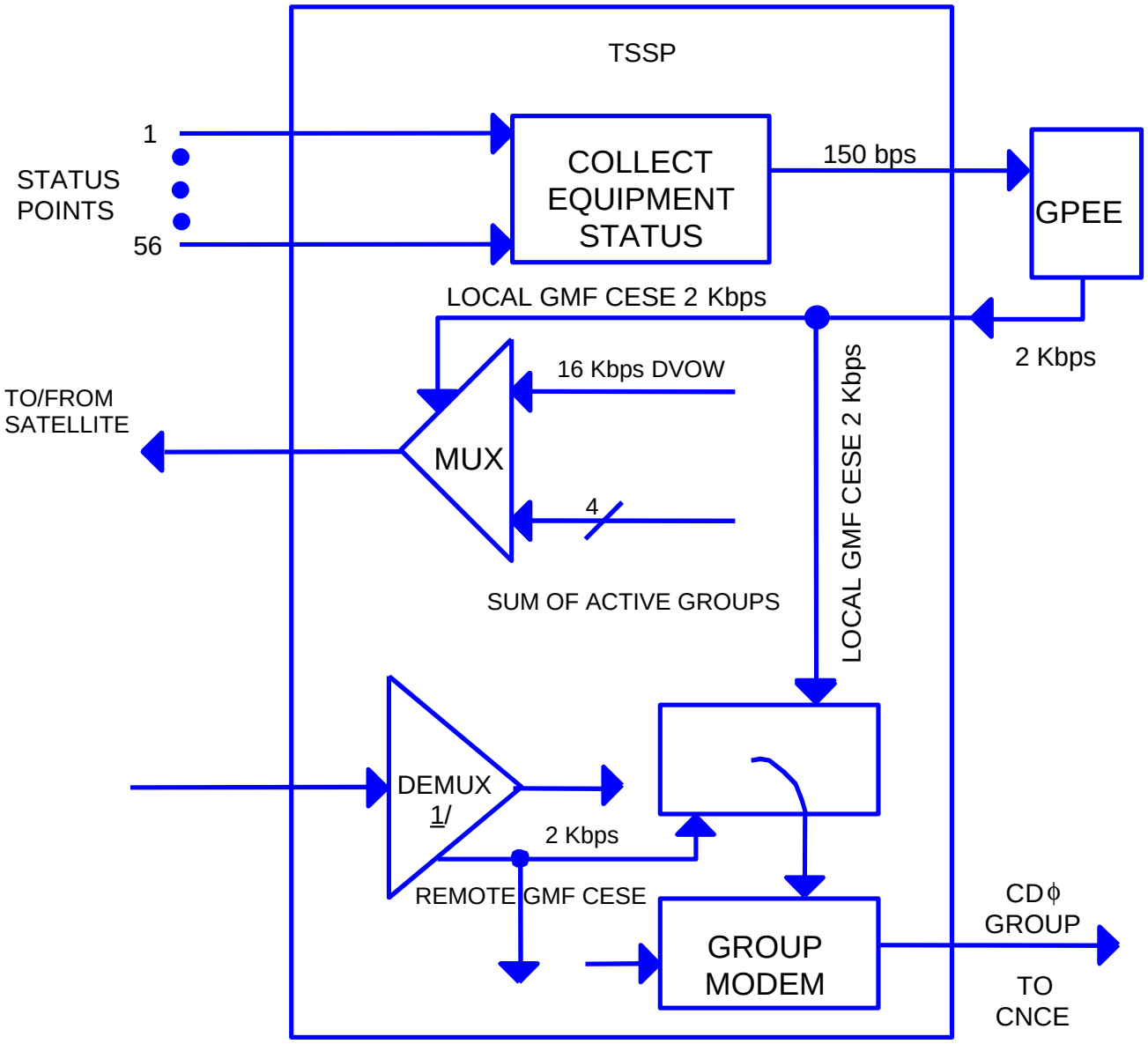

1/ ONE OF FOUR DEMUXES IN THE AN/TSC-100A, BUT ONLY DEMUX 1 CAN HAVE TELEMETRY SENT TO THE CNCE

Figure A-B-6. GMF CESE Operation

in the GPEE. The telemetry is transmitted either over cable to the CNCE, over the group modem or MD-1026 (AN/TSC-100A only), or over satellite to a remote GMF terminal. It should be noted, however, that the local GMF SATCOM terminal cannot send both the local data stream and the one remote data stream simultaneously to the CNCE (see Figure A-B-6). This is a deficiency of the GMF SATCOM terminals. The data stream to be sent to the CNCE is chosen by the terminal operator during configuration of the TSSP.

(2) The DOW function in the GMF satellite terminals is currently unavailable. There is a wiring problem between the TSSP and the KG-84(V).

15. TS-3647 COU AVOW Operation. The COU provides AVOW access when used with the TD-1233 RLGM, TD-1234 RMC, TD-1218 low-speed pulse restorer (LSPR), and TD-1219 high speed pulse restorer (HSPR). A special cable is provided with the COU to interface with the RLGM and RMC. A second special cable is provided to interface with the LSPR and HSPR. The COU provides signaling and a ring indication on the AVOW channel. It is normally used as a maintenance orderwire when installing or troubleshooting the RLGM, RMC, LSPR, or HSPR.

16. AN/TTC-42 Voice Orderwire Control Unit (VOCU), C-11955/TTC-42(V). The VOCU provides the transmitting and receiving interface for all AVOW and DVOW signals. The VOCU provides separate orderwire and conferencing channels for up to seven AVOWs and four DVOWs. It also provides operator access to each individual and to the conference bridge. The VOCU may be operated outside the shelter or inside mounted above the VDU in the maintainer/supervisor position console.

17. SB-3865 Orderwire. Each of the SB-3865's time-division-multiplexing (TDM) groups supports an analog orderwire channel that is terminated locally at the AVOW 1, 2, and 3 posts at the rear connector and binding post panel. A fourth orderwire circuit, connected to the AVOW Attendant (AVOW ATT) binding posts, can be switched to the attendant's headset via a front panel switch. The local circuit (AVOW ATT) must be connected by a jumper to one of the TDM group orderwire channels (AVOW 1, 2, or 3). This connection allows the local attendant to communicate with the attendant or supervisor at the far end of the selected TDM trunk group.

18. AN/MRC-142 Orderwire. The DVOW function is built in to the RT-1601 radio (see Appendix E to Enclosure F). All radio DVOW signals are interfaced

through the conditioned diphase adapter (CDA) (see Appendix E to Enclosure F). The DVOW signals are 16-Kbps transmit DVOW, 16-Kbps received DVOW, call received, and call initiate.

19. Summary of OCU by Assemblage. Table A-B-5 lists the OCU equipment by assemblage.

20. DVOW Ring Code Assignments. Each of the OCU units has the capability to program one of the 16 possible DVOW as its unique ring code. The TOCU has the capability of detecting up to three unique incoming ring codes.

a. On any given DVOW link, the ring codes assigned to each van must be unique. When the push-to-talk switch is depressed on the OCU handset, the receive ring code assigned to that OCU is transmitted. If the ring code is not unique, the other OCU will be rung each time the handset is keyed. This requires the network planner to carefully assign DVOW ring codes to avoid repetition.

Table A-B-5. Orderwire Equipment Distribution by Assemblage

Assemblage	OCU-I C-10716	OCU-II C-10717	OCU-III C-11643	Other
AN/TTC-39 Series		X		
AN/TRC-170(V)				
AN/TSC-85B				
AN/TSC-93B				
AN/TSC-94A				RT-1287
AN/TSC-100A				RT-1287
AN/TRC-173	X			
AN/TRC-174	X			
AN/TRC-175		X		
AN/TRC-138		X		
AN/TSQ-146	X			
AN/TYQ-31			X	
AN/TTC-42				VOCU C-11955
AN/MRC-142				CDA
AN/TRC-190				MD-1072
AN/TTC-46				MD-1072
AN/TTC-47				MD-1072
AN/TTC-48(V)				MD-1072

b. The following ring-code assignments criteria meet the nonrepetition requirements:

(1) Assign a unique number to each AN/TTC-39 series CS using the highest available; e.g., 16, 15, 14.

(2) Assign low, odd-numbered ring codes to the radio vans from the controlling end of the system; e.g., 1, 3, 5.

(3) Assign low, even-numbered ring codes to the radio vans from the noncontrolling end of the system; e.g., 2, 4, 6.

(4) If there is an odd-number of vans, assign it to the controlling end; i.e., an odd number.

c. Restrictions and Comments

(1) The ring codes for the radio vans can be reused throughout the network because they will be on separate DVOW channels.

(2) If a van terminates more than one radio system, it must be the controlling end of both systems because the OCU will respond to only one ring code.

(3) Because the TSSP in the GMF TACSAT terminals switches or interconnects the DVOW channels based on the programmed ring codes, all ring codes programmed in a hub-spoke or meshed mode network must be unique.

d. Terminating Options

(1) The AN/TTC-39 series CS should TERMINATE all DVOW channels because they are at the ends of all links.

(2) If a van supports a single system, the two DVOW channels should be in the BRIDGE mode to allow calls to that van and through it to all others on the link.

(3) If an AN/TRC-173 or AN/TRC-174 van supports multiple systems, the DVOW channels for each link should be matrixed together. This allows

calls through the van without any operator intervention and allows all parties to ring to the van. NOTE: The matrix is broken by pushing the button associated with either side of the matrix.

(4) If an AN/TRC-175 or AN/TRC-138A supports multiple systems, the DVOW channels must be in TERMINATE. All calls must be bridged manually by the operator.

21. DOW Station Identification and Subchannel Assignments. Each OCU has the capability to program a unique Station Identification (STA ID) to identify the terminal for DOW telemetry reports. The STA ID consists of a single alphabetic character (preassigned by terminal type) and a two-digit numeric code.

a. For any given node, the STA IDs assigned to each van must be unique. This requires the network planner to carefully assign STA IDs to ensure they are nonrepetitive.

b. The following assignment criteria satisfy the cited requirement.

(1) Alphabetic Codes. The alphabetic character is assigned by terminal type, as shown in Table A-B-6.

Table A-B-6. Alphabetic Codes by Terminal Type

Alphabetic Codes	Terminal Type
E	AN/TSC-100A
F	AN/TSC-94A
L	AN/TRC-173
M	AN/TRC-174
R	AN/TRC-138A
S	AN/TRC-175
T	AN/TRC-170
X	AN/TSQ-146

(2) Numeric Codes

(a) Terminals directly connected to an AN/TTC-39 series CS and the BOH-TOH terminals (if used) are assigned in the range 01 to 09, with the last digit also specifying the subchannel for that assemblage.

(b) Each radio link is assigned a unique first digit by type of system and each van in a given link is identified sequentially away from the controlling end from 1 to 9. This allows up to nine radio systems per node and up to nine shelters in each link. The last digit equals the subchannel for the shelter in the 2-Kbps DOW channel.

(c) These numbering criteria do not fully utilize all the available subchannels, but simplify and standardize DOW STA ID and subchannel assignments.

(INTENTIONALLY BLANK)

APPENDIX C TO ENCLOSURE A

SYSTEM TIMING

1. Timing Requirements. Network timing and synchronization are critical issues for the tactical communications planner. The basic operational requirement for network synchronization is the need for each system to maintain bit count integrity to provide end-to-end communications security and acceptable data transmission. For satisfactory system operation, string requirements must be satisfied with regard to the timing variations that are allowable both within and among the DTGs. Several different synchronous and asynchronous concepts are employed to provide network synchronization. (See CJCSM 6231.03A.) When the TRI-TAC architecture was originally established, an independent clock approach was chosen.

a. In the independent clock approach, network timing is established by employing a frequency standard at each node to provide a stable local timing reference. This technique is inherently asynchronous since the frequency standards will vary slightly from node to node. The differences between the basic data rates of the incoming digital groups and that of the local timing source are accommodated through use of buffers to retime the incoming digital data streams to the timing used at the node. To minimize the differences between timing sources, highly accurate clocks, such as the cesium beam frequency standard (CBFS) and the rubidium standard (RB STD), are used to implement the independent clock approach.

b. The basic timing elements of the independent clock network timing approach include a modem, a buffer, and a highly accurate frequency standard. The modem is used to regenerate the incoming digital data stream and to convert the line signal (conditioned diphase (CDϕ), dipulse, etc.) to baseband nonreturn to zero (NRZ). The clock is used to provide a stable local timing source. The buffer is used to absorb differences between the frequency of the local clock at the receiving node and the frequency that is associated with the incoming digital data stream.

c. The buffer is an asynchronous first-in, first-out (FIFO) shift register. With asynchronous operation, data can be entered into the

buffer and withdrawn at different rates. Data are clocked into the buffer by the clock associated with the received data and clocked out of the buffer by the local clock. Since the output rate of the buffer is controlled by the local clock, the incoming digital bit stream is retimed with the frequency of the local clock. If the received clock rate is slower than the local clock rate, the buffer will eventually underflow and then recenter. Conversely, if the receive group clock rate is faster than the local clock rate, the buffer will eventually overflow and then recenter. Each time a buffer recenters (or resets), bit count integrity is lost and frame and CRYPTO synchronization must be reestablished.

d. The clock frequency of the incoming digital data stream can differ from that of the local nodal clock because of the inherent differences in the clocks at the two nodes and the propagation delays in internodal transmission systems. These factors, as well as the link transmission rate and the allowable buffer reset period, dictate the size requirements for the buffer. The buffers required for either cesium or rubidium standards are relatively small in size for the digital groups and facilities employed in terrestrial systems. Satellite links require larger buffers to compensate for range variations (Doppler effect) because of the eccentricity of the satellite orbit.

e. The design criteria for TRI-TAC equipment requires that buffers not be reset more often than once in 24 hours. This design assumes that each major node has a CNCE as the master timing source. The CNCE provides the cesium clock for the node and buffering for all incoming groups from other nodes. However, the AN/TTC-39 series CS with its rubidium standard and large buffer (± 256 bits) also meets the requirements for a master timing source. Thus, it is necessary for the planner-engineer to understand the timing and buffering capabilities of all fielded items of TRI-TAC equipment to be able to design a stable network.

2. Network Timing Considerations. Determining the timing system configuration for the network is a task that must be done at the planning level. However, much of the information necessary to make network timing decisions is not available in the equipment technical orders and manuals. Thus, in designing a network timing system, the planner must consider the following:

a. Timing Sources. If different sources are used (i.e., the independent clock approach), the system must have adequate buffering. Otherwise, the differences in clock frequencies will cause bit count integrity to be lost each time the accumulated error between the two clocks reaches the time duration of one bit. Each timing source has its own accuracy. Inaccurate timing sources increase the need for buffering. If only one source of timing is used in the system, consideration must be given to the effect of failures in the network.

b. Available Buffering. If different timing sources are used, data must be buffered at each interface point. The buffering capabilities, by equipment type, are discussed in paragraph 2c.

c. Timing Source Selection. The capabilities to derive and interconnect timing in the fielded item of TRI-TAC and GMF equipment are discussed in paragraphs 3 through 18 below. The information and timing configurations provided for each equipment type in these discussions can be used to plan and implement network system timing.

(1) Paragraphs 3 through 11 provide specific examples of the interconnection of selective items of DGM and cryptographic equipment. Although these configurations are intended primarily for AN/TSQ-146 Multiplex Terminals without Digital Clock Pulse Generators (DCPGs), the information is valid any time this equipment is connected.

(2) Paragraphs 12 through 22 describe timing flow in the AN/TSQ-111 CNCE, AN/TTC-39 series CS, AN/TRC-170, AN/TSQ-146 MUX Van, AN/TTC-42, SB-3865, TSSP, and DGM equipment. The operation of each timing mode is described, and the expected accuracy of any master oscillator is given. These paragraphs provide the basis for understanding timing flow in a network.

(3) Paragraph 24 provides some general guidelines for planning and establishing network timing systems. Paragraph 25 provides a network timing planning example.

3. Trunk Encryption Device Timing. Figure A-C-1 shows the TED operation from a timing standpoint. Timing T1 is inserted in the TED BSC input. The TED uses T1 to clock the encrypted data out of the TED. The TED provides a RED Station Clock (RSC) that is synchronous with

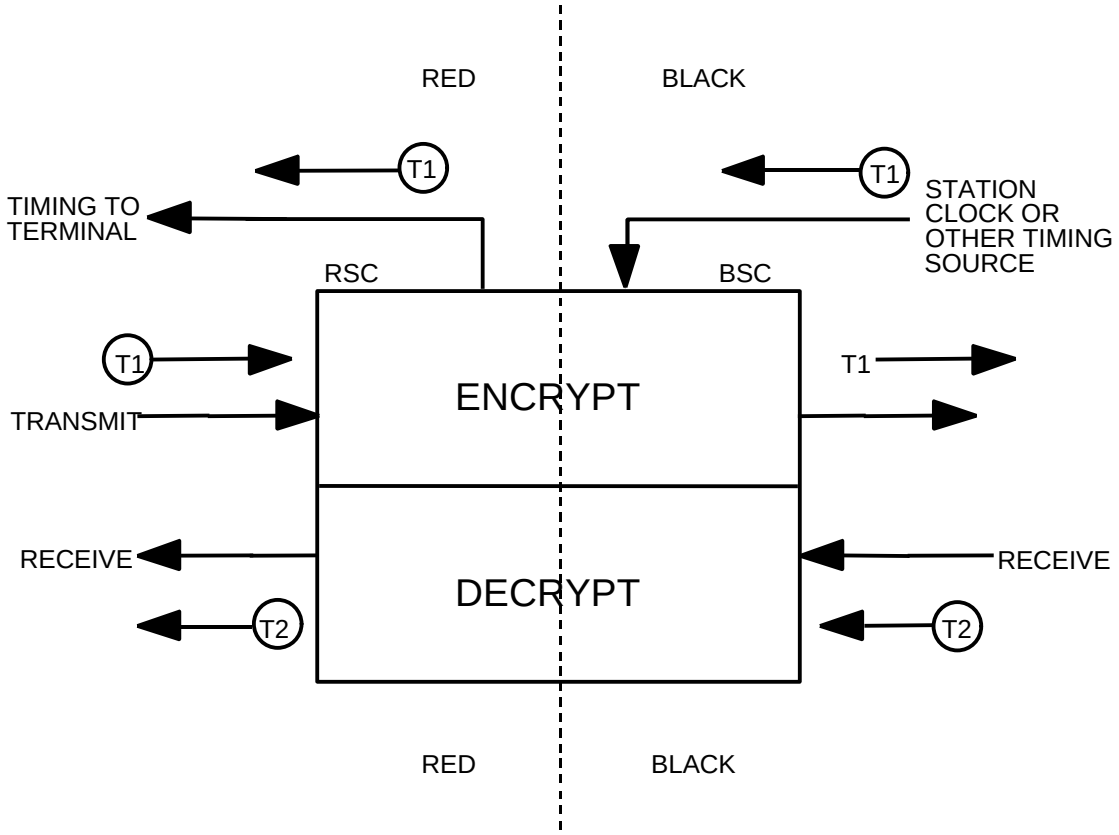

Figure A-C-1. TED Timing Flow

timing T1 to the terminal equipment. The RSC is used by the terminal equipment to send RED data to the TED. In the opposite direction, BLACK data and timing T2 are received by the BLACK side of the TED. The data are decrypted, and RED data and timing T2 are output from the RED side of the TED to the terminal equipment.

4. TD-1235, LGM Timing. The TD-1235 LGM is always timed by a clock at the group rate. The timing may be supplied by an external station clock or from the clock associated with the received group (loopback timing). A two-position toggle switch on the timing generator CCA in the LGM selects either the station clock mode or the loopback mode of timing. At the receive group input, the LGM has a ±8-bit buffer.

a. Loopback Timing Mode. Figure A-C-2 shows the LGM operation in a loopback mode. The figure depicts the multiplex and demultiplex halves of a signal LGM as separate entities. Timing T1 is recovered from the received group and is used to time the transmitted group. This timing is also divided down and used to time the transmitted loops. The ±8-bit buffer has no effect in this mode of operation. Receive loops are timed by the loop device being slaved to the incoming loop signal for timing.

b. Station Clock Timing Mode. Figure A-C-3 shows the LGM operation in a station clock mode. The station clock T2 is supplied by an external source and inserted into the LGM. This clock is used to time the transmitted loops and the transmitted group. Timing T1 is associated with the received group. This timing is used to clock data into the ±8-bit buffer where it is retimed by the station clock T2. Thus, the buffer accommodates, within limits, differences between clocks T1 and T2.

5. TD-1236, TGM Timing. The TGM can be timed either from an external station clock or from a clock recovered from the received supergroup. The timing mode is selected by a two-position toggle switch on the timing generator CCA. One position selects the station clock mode, while the other selects the loopback mode. The TGM has a ±32-bit buffer.

a. Loopback Timing Mode. Figure A-C-4 shows the TGM operation in a loopback mode. The figure depicts the multiplex and demultiplex

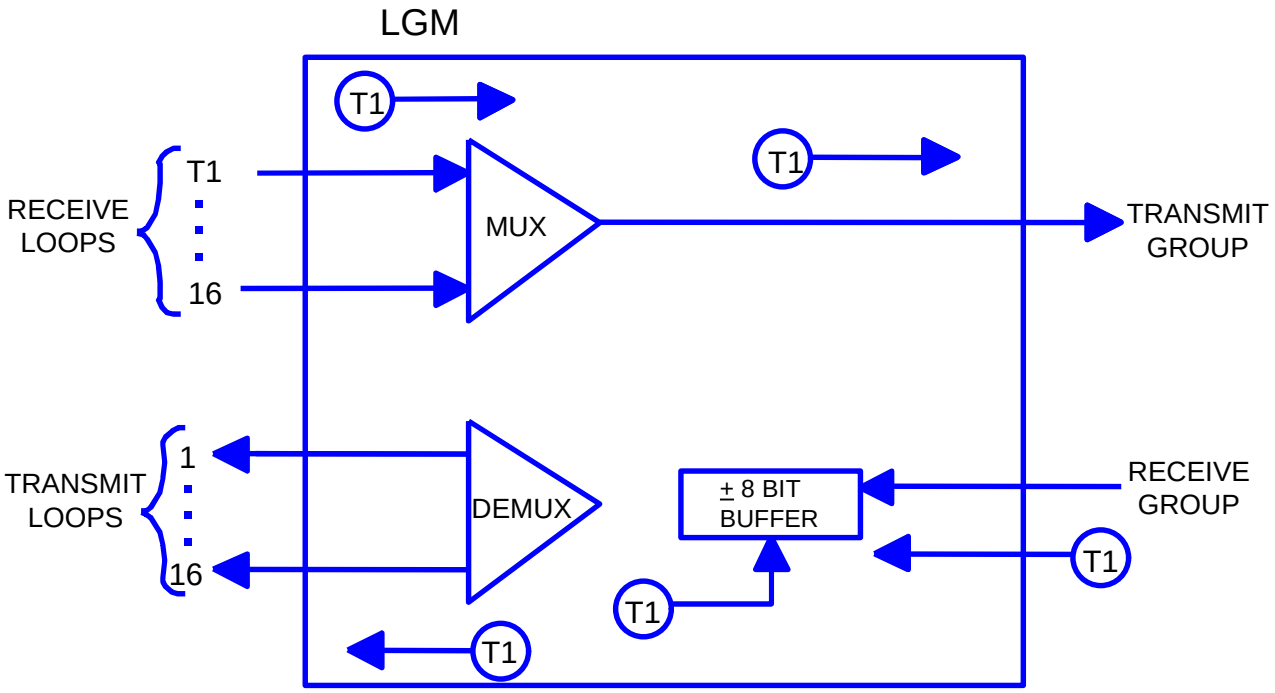

Figure A-C-2. TD-1235 LGM Timing Flow, Loopback Mode

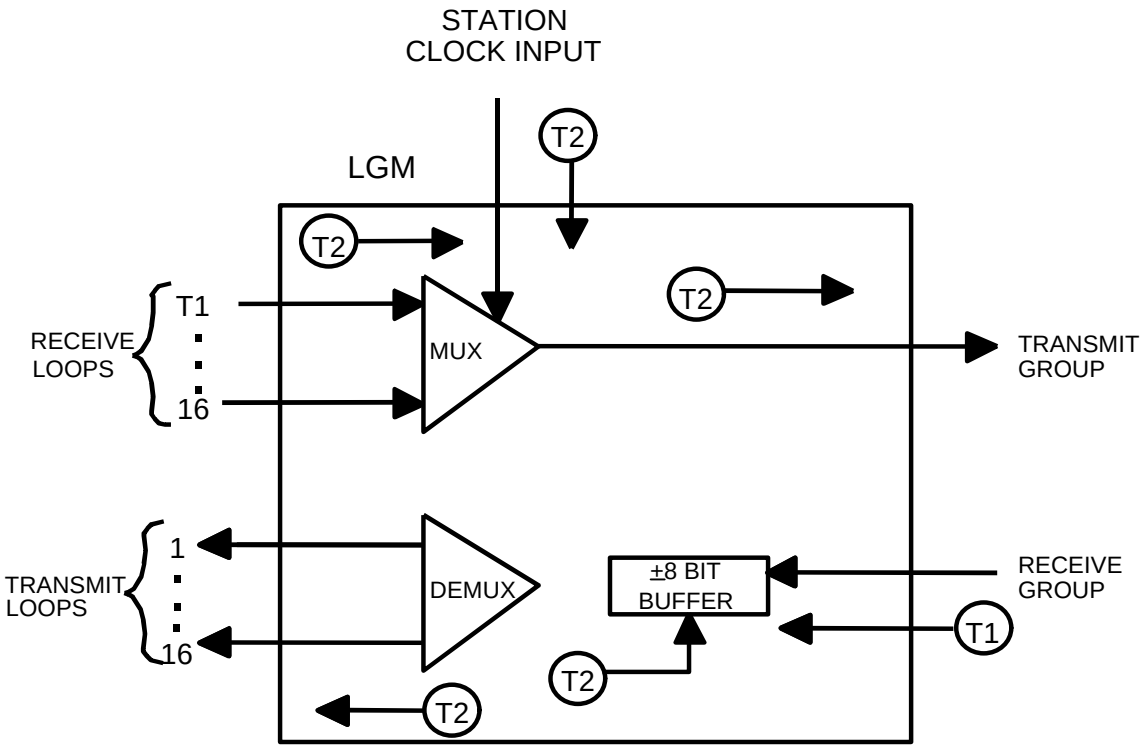

Figure A-C-3. TD-1235 LGM Timing Flow, Station Clock Mode

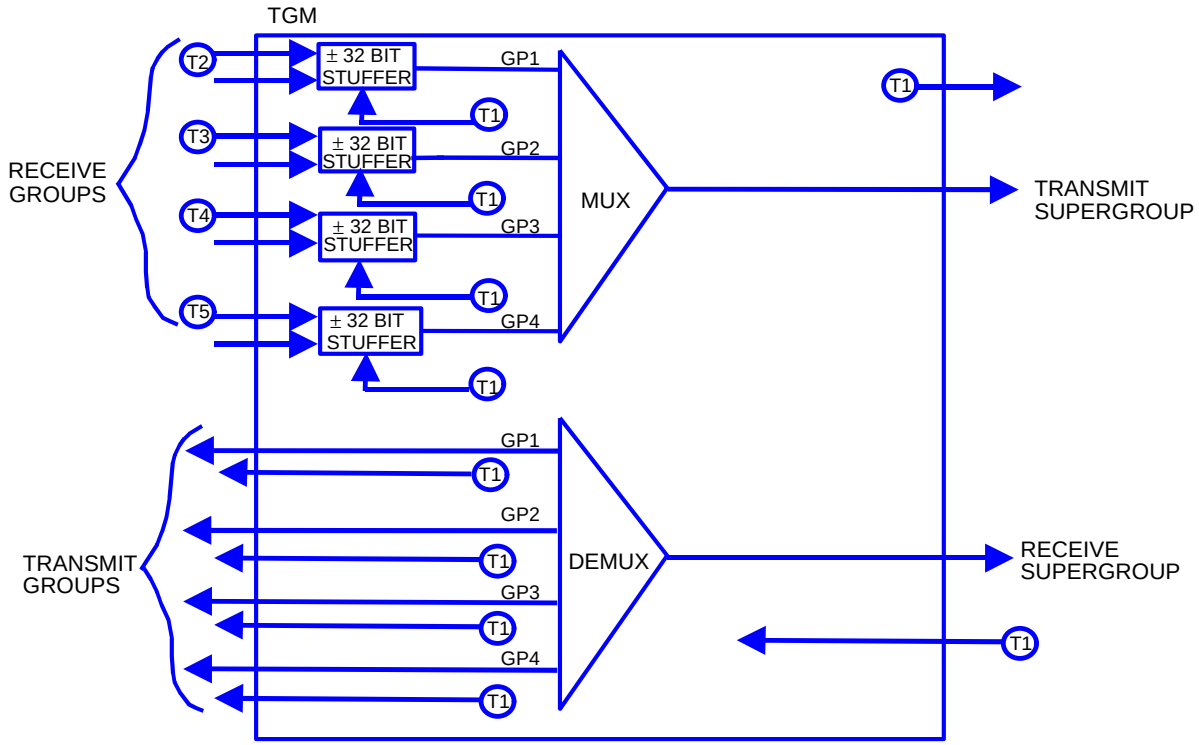

Figure A-C-4. TD-1236 TGM Timing Flow, Loopback Mode

halves of a single TGM as separate entities. Timing T1 is recovered from the received supergroup and is used to time the transmitted supergroup. Timing T1 is also divided down and used to time the transmitted low-speed groups. The received side of the low-rate groups may be timed by different clocks. In the figure, the four received groups are shown being timed by timing T2, T3, T4, and T5. The ±32-bit buffer on each low-rate group input accommodates any timing differences between the transmitted supergroup clock T1 and the received group clocks T2, T3, T4, and T5.

b. Station Clock Timing Mode. Figure A-C-5 shows the TGM operation in a station clock mode. The figure depicts the multiplex and demultiplex halves of a single TGM as separate entities. Timing T1 is recovered from the received supergroup. This timing T1 is divided down and used to time the transmitted low-rate groups. Timing T2 is the timing inserted in the TGM station clock input. The station clock timing T2 is used to time the transmitted supergroups. The received low-rate groups may be timed by separate clocks. In the figure, the four received groups are shown being timed by timing T3, T4, T5, and T6. The ±32 bit buffer on each low-rate group input accommodates any timing differences between the clock associated with the transmitted supergroup T2 and the clocks associated with the received groups, T3, T4, T5, and T6.

6. TD-1234, RMC Timing

a. The RMC can be operated in three timing modes: loopback, master, and station clock. The mode of operation is chosen by a toggle switch on the group modem card. The accuracy of the internal oscillator used in the master timing mode is approximately 5 parts in 10^5. Thus, the master timing mode should be used only in RMC-to-RMC standalone circuits. In these configurations, one RMC must be operated in master timing and the other in loopback timing. The master timing mode should never be used when the RMC is part of a network with the AN/TSQ-111, AN/TRC-170, AN/TTC-39 series CS, AN/TTC-42, SB-3865, or AN/TSQ-146. The station clock mode is only used for maintenance testing and is not discussed in this document.

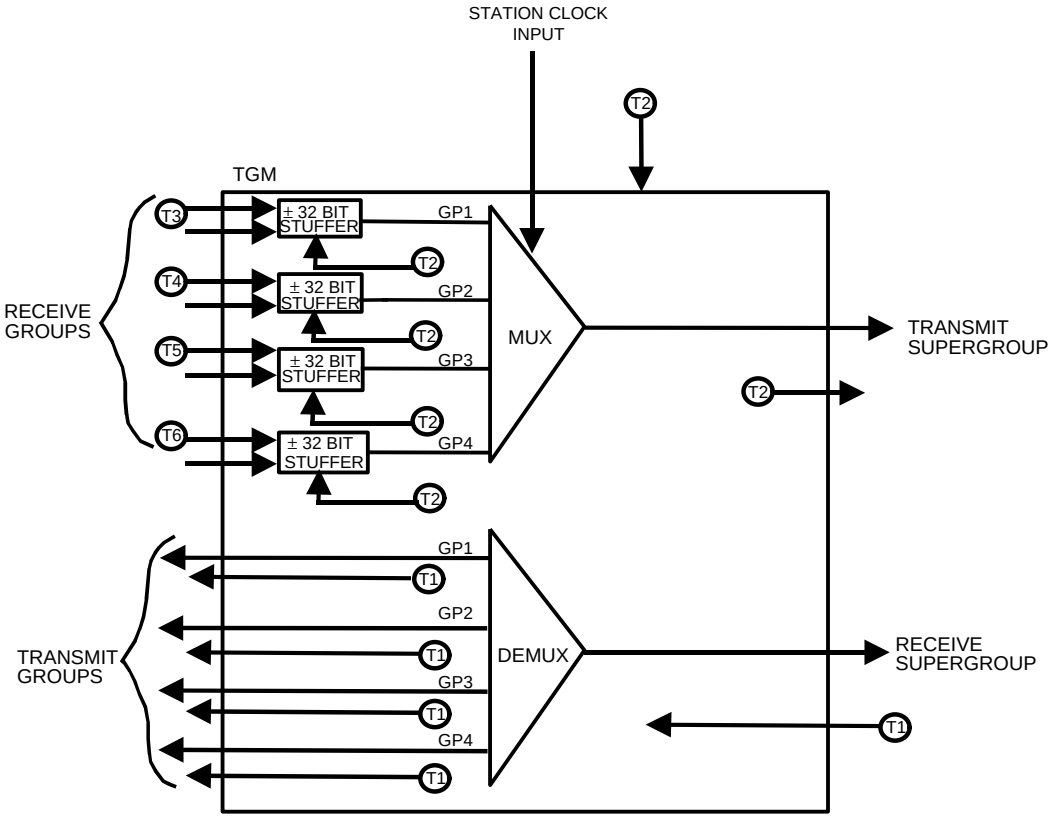

Figure A-C-5. TD-1236 TGM Timing Flow, Station Clock Mode

b. The normal mode of operation for the RMC is loopback timing. This mode is shown in Figure A-C-6. The figure is a simplified drawing of an RMC. The high- and low-group modems and the internal multiplex and demultiplex equipment are depicted as separate entities. In the loopback mode, timing T1 is recovered from the high-group received signal. Timing T1 is then divided down and used to time the transmitted loops, the transmitted low-, and high-group signals. The equipment connected to the low-group will be either an RMC or an RLGM. The RMC or RLGM connected to this port must be operated in a loopback timing mode. As a result, timing T1, which is used to time the low-group transmit, will be looped back and the low group receive signal will be timed by timing T1. The DSVT, digital nonsecure voice terminal (DNVT), or modems connected to the loops will loopback timing T1.

7. TD-1233, RLGM Timing. The RLGM can be operated in two timing modes, loopback and master station. A toggle switch on group modem card A-11 selects the mode.

a. Loopback Timing Mode. In the loopback mode, timing T1 is recovered from the group received signal. (See Figure A-C-7.) Timing T1 is then used to time the transmitted loops and the transmitted group. Timing T1 is also shown being received at the loop inputs. The equipment connected to the loop side will loop timing back to the RLGM.

b. Master Timing Mode. In the master timing mode, the RLGM internally generates timing T1. The accuracy of this oscillator is approximately 5 parts in 101. Timing T1 is then used to time the transmitted loops and the transmitted group. Timing T1 will be received at the loop inputs. (The equipment connected to the loops will loop the timing back.) Timing T1 is also shown being received at the group input. The only time that master timing is used is in a stand-alone RLGM-to-RLGM application. In this case, one RLGM must use master and the other, loopback timing.

c. Station Clock Mode. A station clock input is also provided on the RLGM. Like the RMC, this input is for test and not used in normal operation; therefore, it is not discussed.

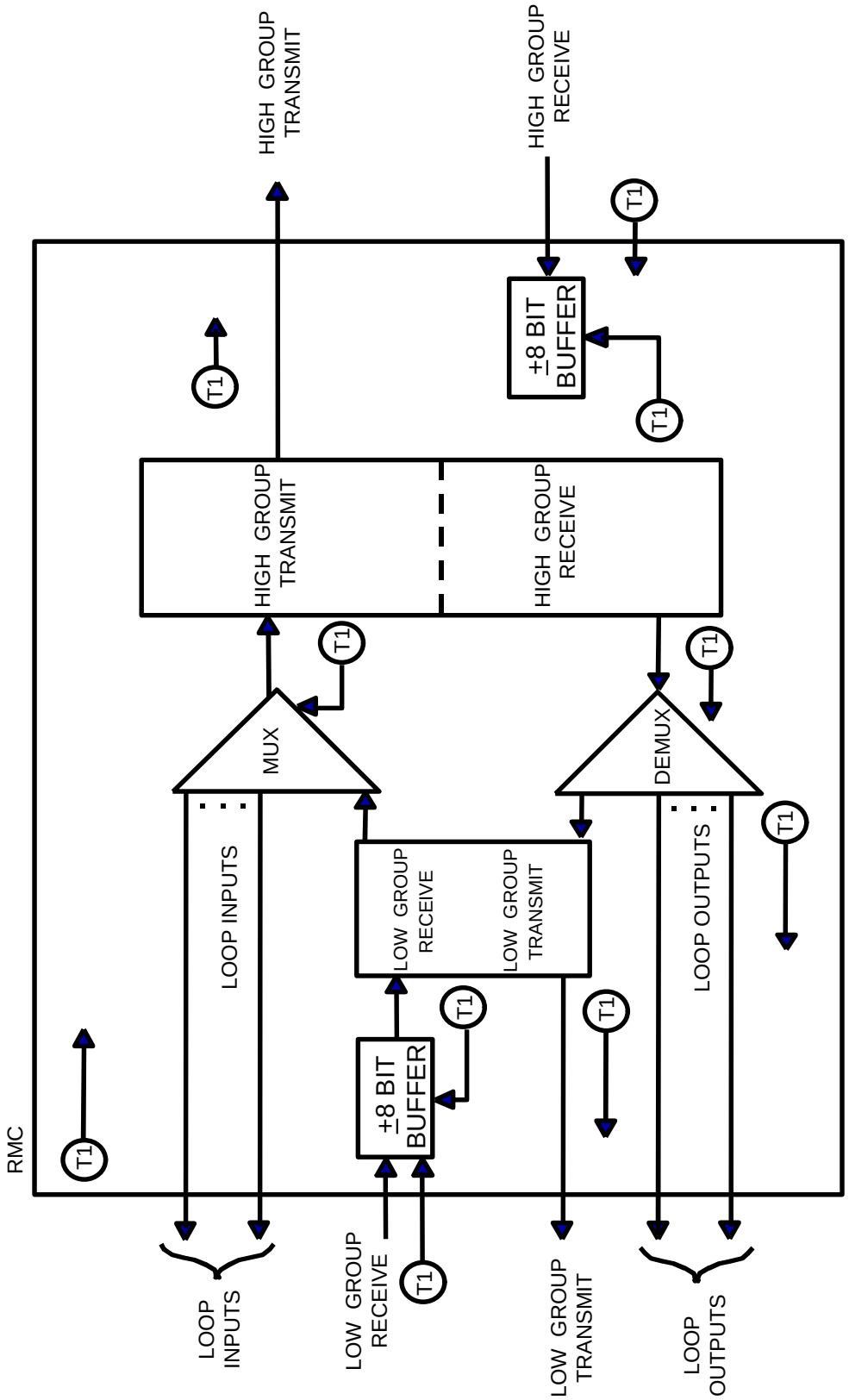

Figure A-C-6. TD-1234 RMC Timing Flow, Loopback Mode

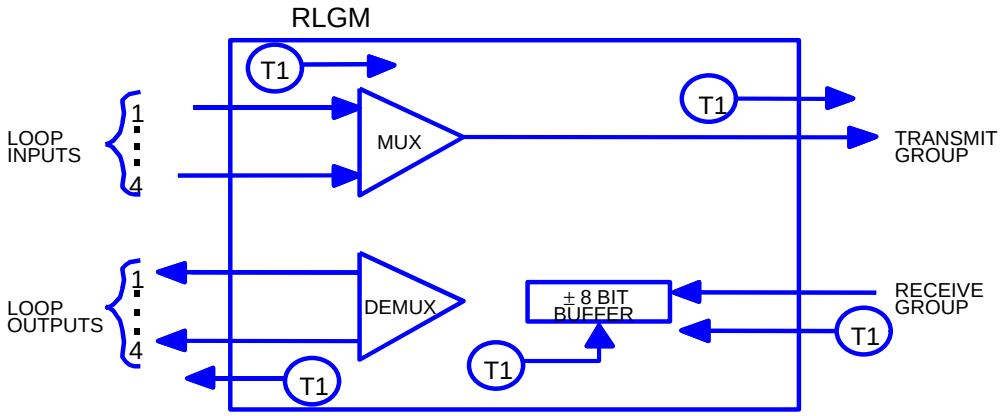

Figure A-C-7. TD-1233 RLGM Timing Flow

8. MD-1026 GM Timing. The group modem passes timing through in both transmit and receive directions (see Figure A-C-8). There is no capability to buffer data in the modem. The GM recovers timing from the cable side and provides a station clock output at the group data rate in addition to the timing signal associated with the group output. This clock may be used as a station clock source for other equipment.

9. MD-1023, LSCDM/MD-1024, HSCDM Timing. Both the LSCDM and HSCDM pass timing through in both directions (see Figure A-C-9). There is no capability to buffer data. The cable drivers recover timing from the cable and provide a station clock output at the group rate in addition to the timing signal associated with the group data output. This timing signal may also be used as a station timing source for other equipment.

10. OCU Timing Distribution. The OCU-I and OCU-II can be operated in three timing modes, two slave modes or a master mode. For timing sources it can use either a group input (OCU-II), a DVOW input, or its internal oscillator. The timing mode is selected on the front panel by a thumbwheel switch.

a. Group Timing Mode. The use of the OCU-I or OCU-II slaved to an incoming digital group is shown in Figure A-C 10. In this mode, the OCU recovers timing T1 from the group. Timing T1 is then used to develop two separate group timing outputs, both related to timing T1 in the figure. Table A-C-1 lists allowable rates for group 1 inputs and outputs. Table A-C-2 gives the allowable rates for group 2. In the event of failure of the group from which timing is being derived, the OCU will automatically switch to a master timing mode.

b. Digital Voice Orderwire. The timing distribution from an OCU-I or OCU-II slaved to a DVOW timing source is shown in Figure A-C-11. One of six possible DVOW channels in an OCU-I and five channels in an OCU-II is selected as the timing source T1 by a front panel thumbwheel switch. This timing is rate multiplied to provide two separate group timing outputs, both related to T1. The specific timing rates available are listed in the output column of Tables A-C-1 and A-C-2. In the event of the failure of the DVOW source from which timing is being derived, the OCU automatically switches to a master timing mode. The DVOW timing mode is not recommended for use as a master timing source for a DTG. Phase-lock-loops perform more efficiently at higher data rates. The DVOW only operates at 16 Kbps.

c. Master Timing Mode. The timing distribution from an OCU-I or OCU-II using the internal master oscillator is shown in Figure A-C-12. Timing T1 is taken from the master oscillator. The two group timing outputs are both related to timing T1. The specific timing rates available are listed in the output column of Tables A-C-1 and A-C-2. The accuracy of the master oscillator is approximately 1 part in 10^5. This timing mode should only be used when no other mode is available.

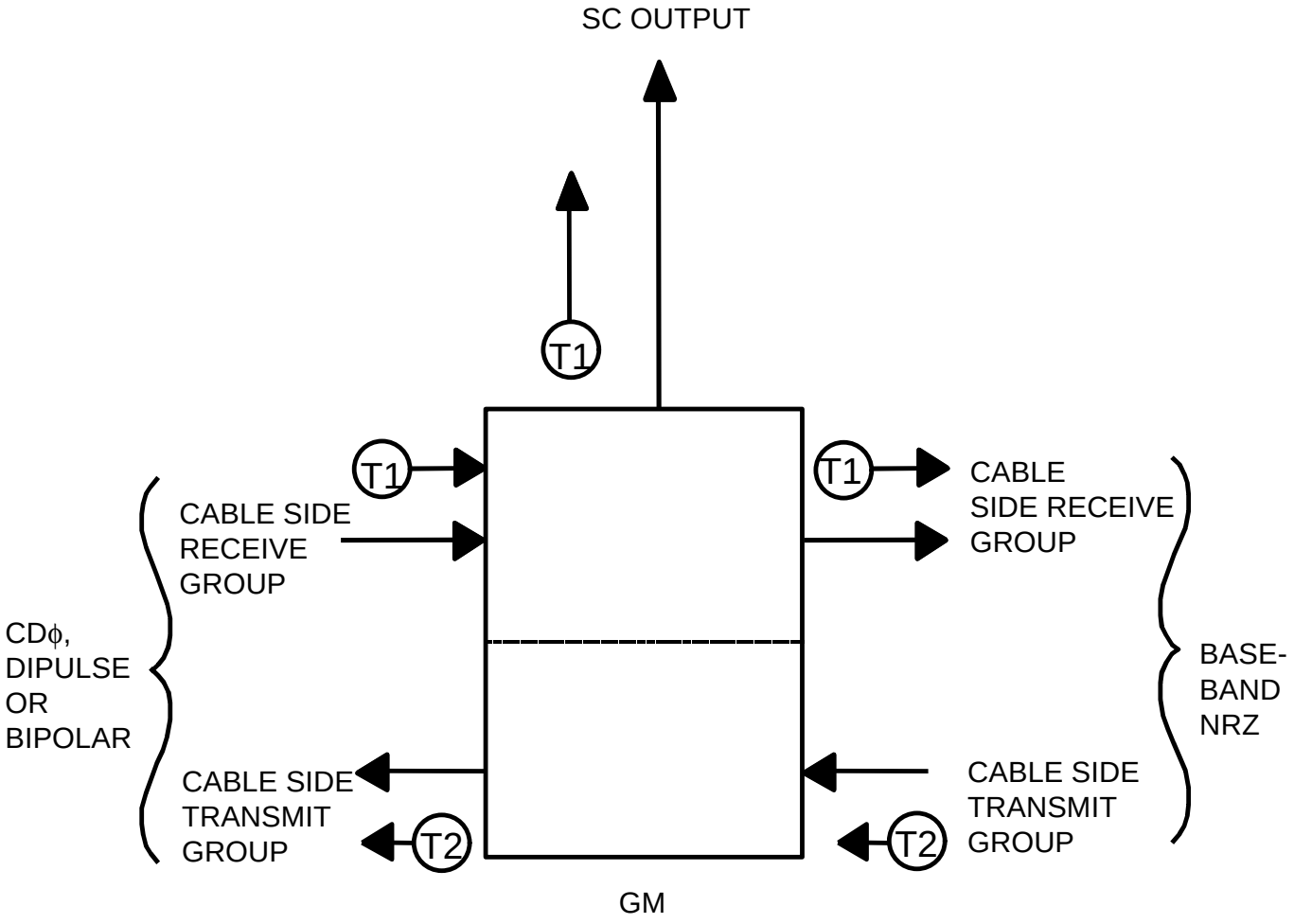

Figure A-C-8. MD-1026 Timing Flow

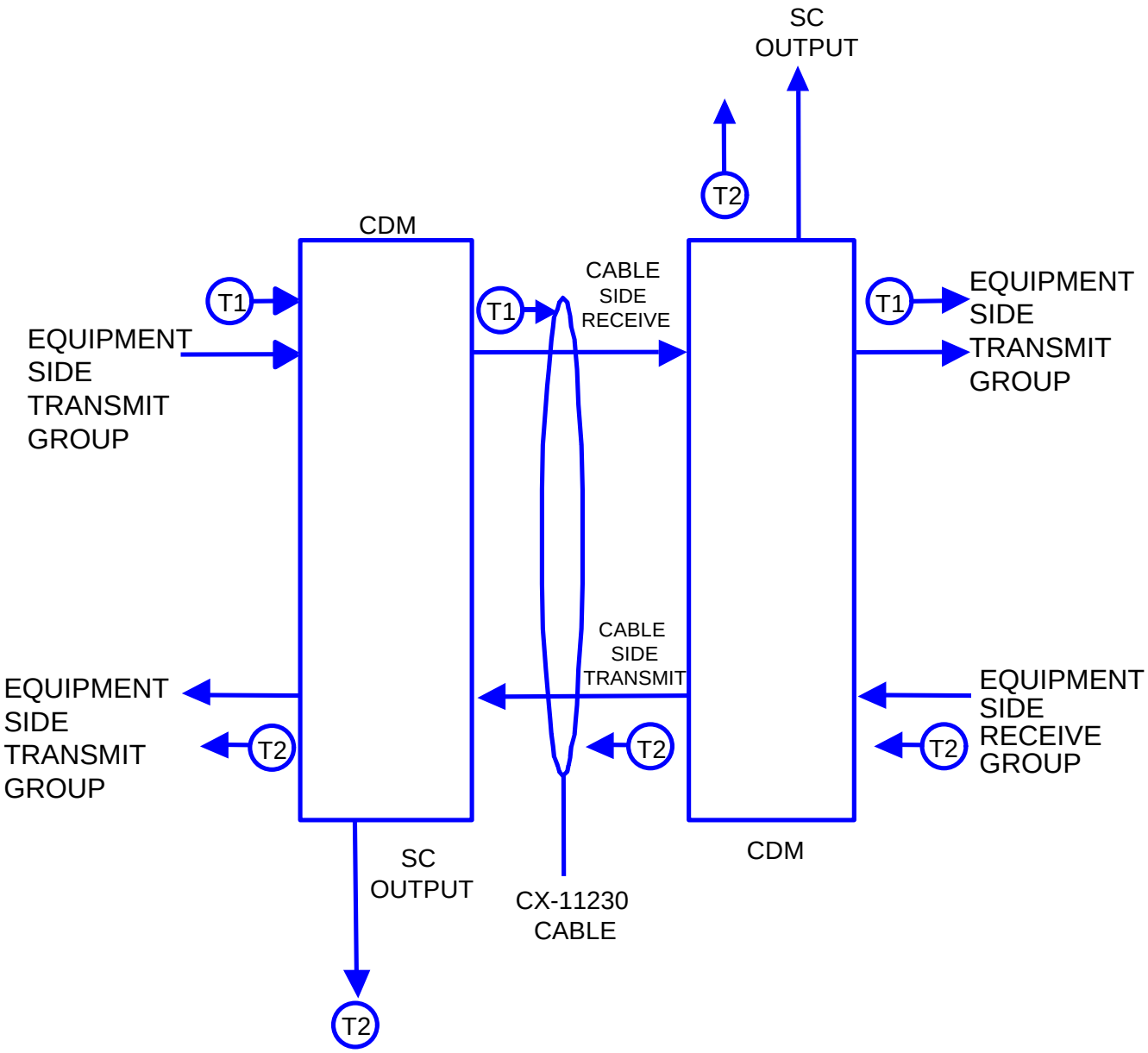

Figure A-C-9. MD-1023 LSCDM/MD-1024 HSCDM Timing Flow

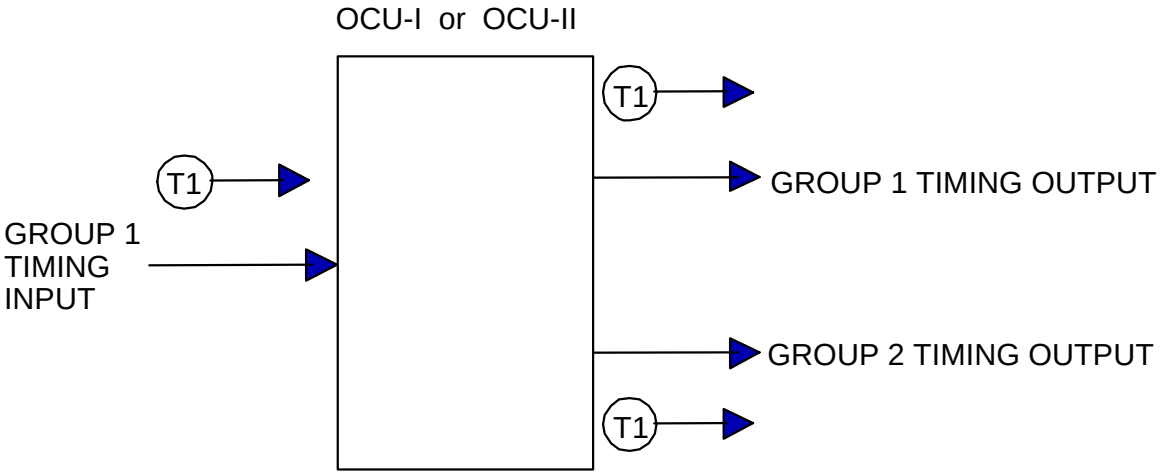

Figure A-C-10. C-10716 OCU-I, C-10717 OCU-II, Group Timing Distribution Group Timing Source

Table A-C-1. OCU-I and OCU-II Group 1 Rates

Switch Position	Group 1 Input Rate (Kbps)	Group 1 Output Rate (Kbps)
2	128	128
3	144	144
4	256	256
5	288	288
6	512	512
7	576	576
8	1,024	1,024
9	1,152	1,152
10	1,536	1,152
11	2,048	2,304
12	2,304	2,304
13	4,096	2,304
14	4,608	4,608

Table A-C-2. OCU-I and OCU-II Group 2 Rates

Group 2 Switch Position	Group 2 Output Rate (Kbps)
2	128
3	144
4	256
5	288
6	512
7	576
8	1,204
9	1,152
10	1,152
11	1,152
12	2,304
13	2,304
14	4,608

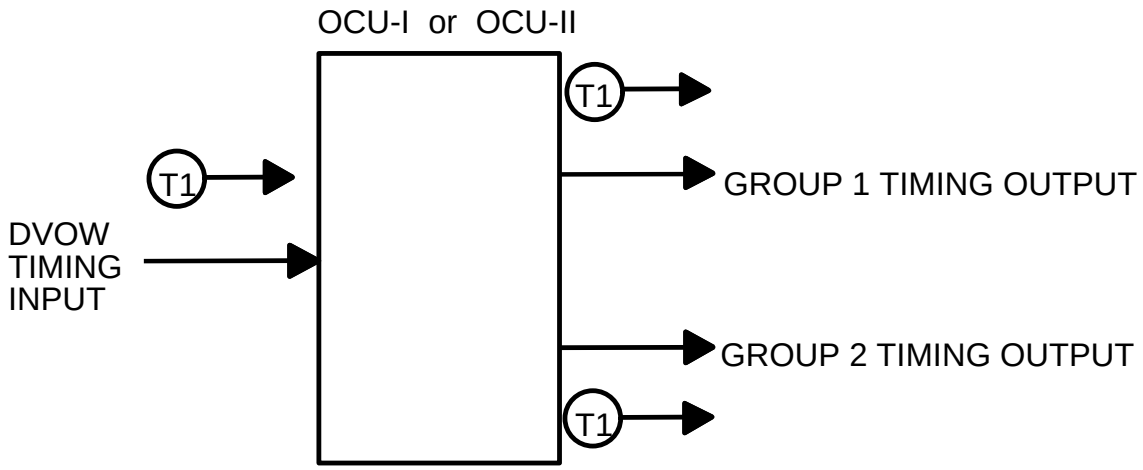

Figure A-C-11. C-10716 OCU-I, C-10717 OCU-II, Group Timing Distribution, DVOW Clock Source

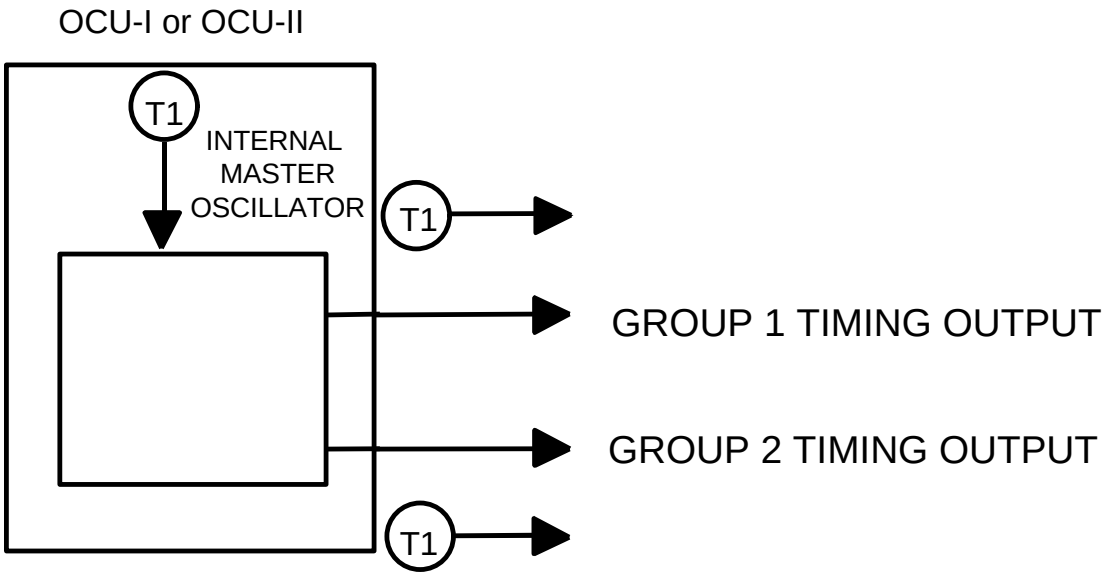

Figure A-C-12. C-10716 OCU-I, C-10717 OCU-II, Group Timing Distribution, Internal Master Clock

11. TD-1237, MGM Timing. The MGM has the capability of operating in the station clock mode or in the loopback timing mode. In the station clock mode, a 16-kHz or 32-kHz signal from an external source needs to be provided. In the AN/TRC-175 and AN/TRC-138A, a 16-kHz clock is hardwired from OCU-II timing outputs. In the loopback timing mode, received mastergroup timing is used to lock the phase lock loop (PLL). If the lock signals are missing, the MGM voltage-controlled crystal oscillator (VCXO) will free run. Figure A-C-13 functionally depicts timing flow in the MGM. As previously stated, station clock or receive mastergroup timing is used as the timing reference. Either of these is counted down and applied to the PLL along with a counted down clock from the VCXO. Differences in these two clocks cause an error voltage, which is amplified and fed back to the VCXO to adjust its output until the phase difference with the reference is zero. The VCXO output is used to derive mastergroup transmit timing, group, and orderwire transmit timing and all internal clocks required by the MGM such as scan and spill clock. Group input clocks, T3 through T14, do not have to be synchronous to T0. Also, when station clock is provided as the timing reference, T2 does not have to be synchronous to T0.

12. AN/TSQ-146 Multiplex Terminal Timing. The AN/TSQ-146 MUX terminal timing subsystem consists of a model TD-1429/TSQ-146 DCPG (Figure A-C-14). The DCPG consists of four rate synthesizers (RS), four timing distributors (TD), one orderwire timing distributor, an autophase function, and the circuitry necessary to install the optional rubidium frequency standard (RB STD). The rate synthesizer, timing distributor, orderwire TD, and autophase functions are discussed in the following subparagraphs.

a. Rate Synthesizer. The four rate synthesizers can function as separate entities or in conjunction with other rate synthesizers or timing distributors. Each RS has one rate-selectable timing input (TMG IN) and two rate-selectable timing outputs (TMG A OUT and TMG B OUT). The RS is capable of generating clocks in both the TRI-TAC (512-Kbps) and Army Tactical Communications System (ATACS) (576-Kbps) rate families. Note that the TMG A OUT and TMG B OUT thumbwheel

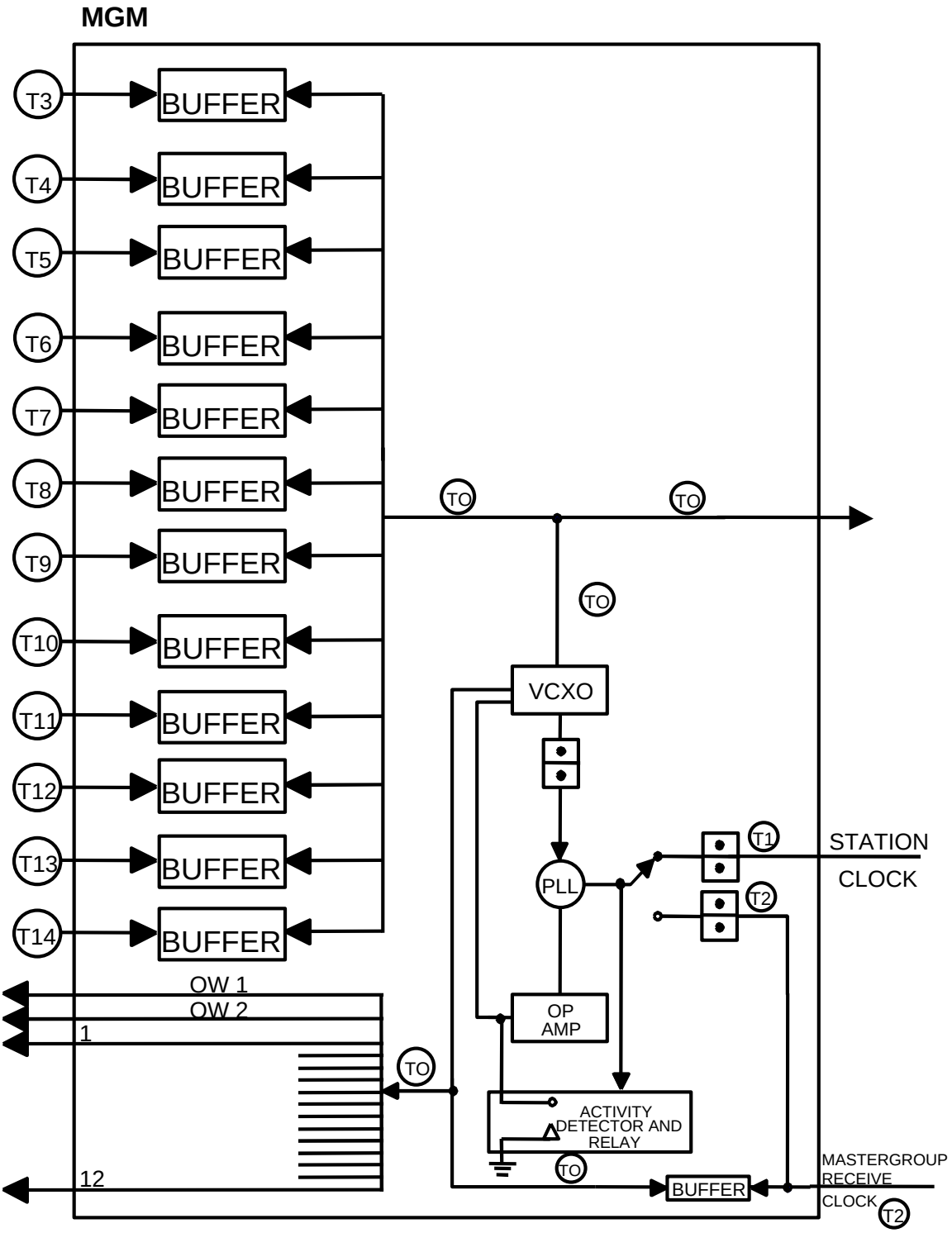

Figure A-C-13. TD-1237 MGM Timing Flow

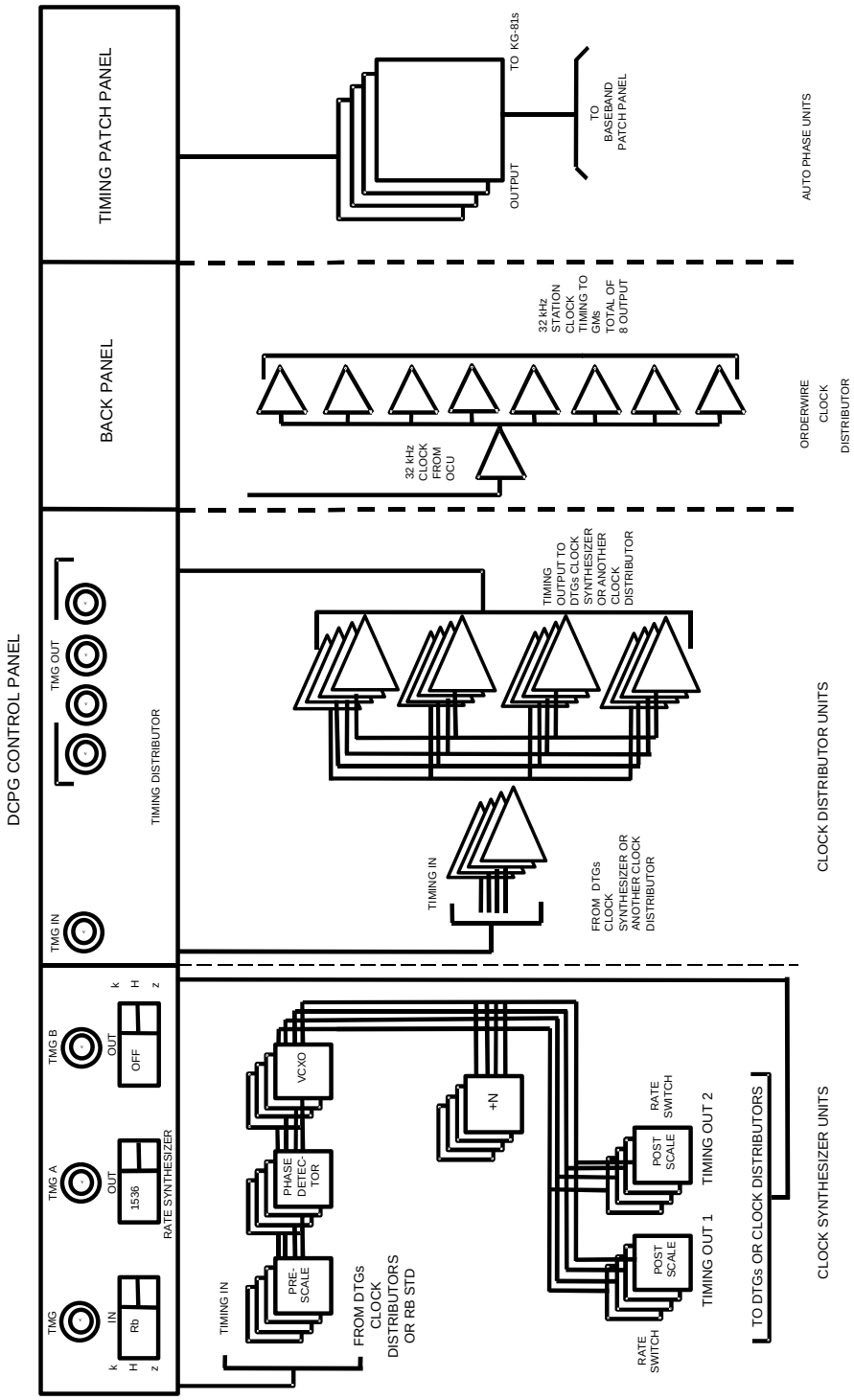

Figure A-C-14. AN/TSQ-146(V) Timing Subsystem (Digital Clock Pulse Generator)

Table A-C-3. DCPG Rate Synthesizer Rates

TMG In	TMG A Out		TMG B Out
RB STD	Family A	72	72
72		144	144
128		288	288
144		576	576
256		1152	1152
512		2304	2304
576		4608	
1024	Family B	128	128
1152		256	256
1536		512	512
2048		1024	1024
2304		1536	
4096		2048	2048
4608		4096	

switches must be set to the same rate family. Table A-C-3 provides a listing of the DCPG clock rates.

(1) Timing Modes. The RS can derive timing either from an input from the rubidium standard (master mode), if installed, or from a clock recovered from a VCXO that generates a clock frequency equal to the highest rate (4,096 Kbps for TRI-TAC, 4,608 Kbps for ATACS) in the rate family selected for the timing output. The output of the VCXO is then divided down to the rate(s) selected on the TMG OUT thumbwheel switches. The RS timing outputs are then patched to either the BSC inputs on the desired DGM equipment or to a timing distributor, if multiple timing signals (at the same rate) are required.

(2) Rubidium Standard. To use the rubidium standard as the clock reference, the TMG IN thumbwheel switch must be set to the RB position.

(3) Group Input. In this mode, the RS uses timing recovered from an incoming digital group as the reference source for the VCXO. The station clock output of the MD-1026 GM or MD-1023 LSCDM terminates either to a TD or directly to the TMG IN jack on the RS. The TMG IN thumbwheel switch must be set to the group rate of the reference group. The rates selected for TMG A OUT and TMG B OUT must be in the same rate family as the reference group.

b. Timing Distributor. The DCPG has four timing distributors, each of which can function independently of the others. The TD is utilized when several clocks of equal rates are required. Each TD has one timing input (TMG IN) and four timing outputs (TMG OUT). The TD provides four balanced timing signals that are at the same rate as the input timing signal. The TD will accept timing inputs from an RS, from the station clock output of a GM or LSCDM, or from another TD. The TMG OUT signals can be patched directly to desired DGM equipment, to the TMG IN on an RS, or to the TMG IN on another TD.

c. Orderwire Clock Distributor (OCD). The orderwire clock distributor is used to distribute the 32-kHz clock from the C-10716 (OCU) to the digital orderwire station clock input of the eight MD-1026 GMs. The OCD has one timing input and eight timing outputs that are interfaced through a connector on the rear panel of the DCPG.

d. Autophase Units. The DCPG has four autophase units. The autophase function must be used when there is a requirement to connect a TED to a low-side group port of a TD-1236 TGM. The purpose of the autophase function is to maintain the proper phase relation between the BLACK station clock input to the TED and the RED transmit data received from the TGM group port.

e. AN/TSQ-146 MUX Terminal Timing Flow. The AN/TSQ-146 can operate in two basic timing modes (master or slave), if the DCPG is equipped with the optional rubidium standard. If the rubidium standard is not installed, the slave timing mode must be used. There are two slave modes: one involving groups operating at the same rate and one involving groups operating at different rates. The various timing modes are discussed in the following subparagraphs.

(1) Master Timing Mode. Figure A-C-15 illustrates the timing flow for an example configuration using the AN/TSQ-146 as a master timing source. In the figure, timing T1 represents master timing derived from the rubidium standard by the clock synthesizers. Timing T2 and T3 represent clocks derived from master sources (CNCEs, AN/TTC-39 series CS, etc.) located at distant nodes. Note that timing T1, even though it is the master timing signal, is not used to time all of the DTGs in the example. In this case, it is due primarily to a design characteristic of the TGM equipment (i.e., the low-side groups are always timed out of the TGM by a clock recovered from the incoming supergroup). It was also due to a conscious decision to take advantage of the larger buffer capability of the TGM equipment. Thus, even if the rubidium standard is installed, the AN/TSQ-146 will generally use a combination of master timing and recovered clocks to time DTGs into and out of the facility. The following subparagraphs explain the timing flow shown in Figure A-C-15.

(a) Timing T1 is provided to TGM 1 (via TED 1), to TGM 2 (via TED 2), and to LGM 2 where it is used to time the transmit side of DTGs 1, 2, and 4, respectively. Timing T2 is recovered from the receive side of DTG 1 by TGM 1 and used to time the low-side groups going to TGM 2 (DTG 9), LGM 1 (DTG 3), and GM 4 (DTG 5). Note that timing T1

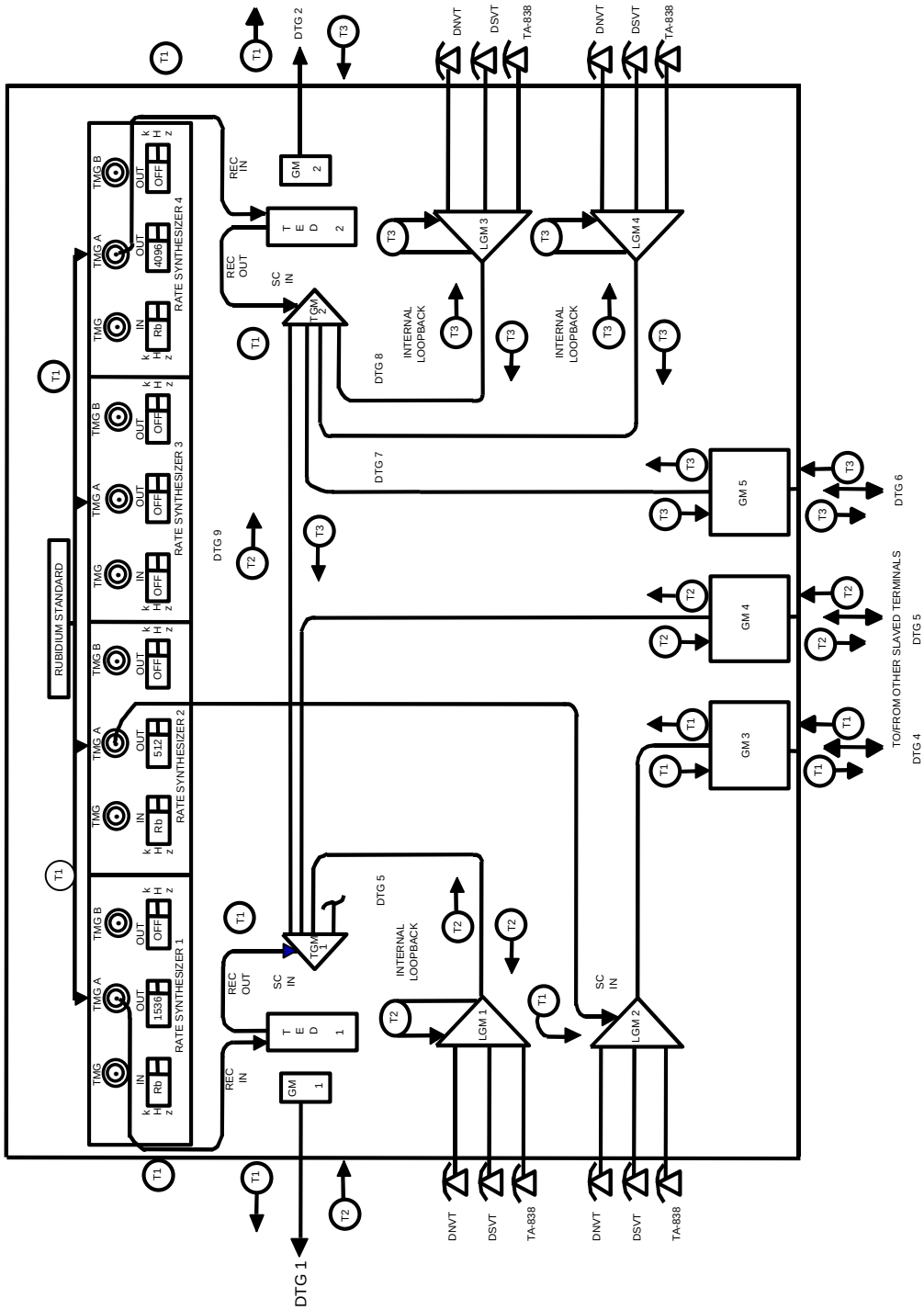

Figure A-C-15. AN/TSQ-146 Master Timing Mode

could be provided as a station clock input to LGM 1, and any differences between T1 and T2 reconciled by the ±8-bit buffer in the LGM. However, the decision was made to use T2 to time LGM 1 (operating in loopback) thereby using the ±32-bit buffer in the TGM to reconcile any differences between T1 and T2.

(b) Timing T3 is recovered from the receive side of DTG 2 by TGM 2 to time the low-side groups between TGM 2 and TGM 1 (DTG 9), LGM 3 (DTG 8), LGM 4 (DTG 7), and GM 5 (DTG 6). Again, the decision was made to time LGMs 3 and 4 with recovered timing T3 and use the larger buffering capability of the TGM to reconcile any differences between T1 and T3.

(2) Slave Timing, Equal Rate Groups. When the DTGs connected to the AN/TSQ-146 are operating at equal rates and the DTG is slaved to a recovered clock, the TDs can be used to distribute the recovered clock. Figure A-C-16 illustrates this timing configuration. Timing T1 is recovered from DTG 1 by GM 1 and provided to the TGM IN jack on the TD. The TD distributes T1 to the TGMs (by the TEDs) where it is used to time the transmit sides of DTGs 1, 2, and 3. Timing T1 is also used to time the low-side groups out of TGM 1. Timing T2 and T3 are recovered by TGMs 2 and 3 and used to time the low-side groups of those TGMs.

(3) Slave Timing, Unequal Rate Groups. When the DTGs connected to an AN/TSQ-146 are operating at different rates, one or more (depending on the number of clock rates required) of the rate synthesizers must be used. Figure A-C-17 illustrates this timing configuration. In this example, the combination of a TD and an RS is used to provide and distribute the required timing. Timing T1 is recovered from the received side of DTG 1 and used as the master timing signal. Timing T1 is recovered by GM 1 and provided to the TMG IN jack of the TD. It is then provided to TGM 1 and the RS by the TD. Timing 1 is used by TGM 1 to time the transmit side of DTG 1 as well as its low-side groups. The RS provides T1-related timing to TGMs 2 and 3 where it is used to time the transmit side of DTG 1 as well as its low-side groups. The RS provides T1-related timing to TGMS 2 and 3 where it is used to time the transmit side of DTGs 2 and 3, respectively. Timing T2 is recovered from DTG 2 and used to time the low-side groups from TGM 2.

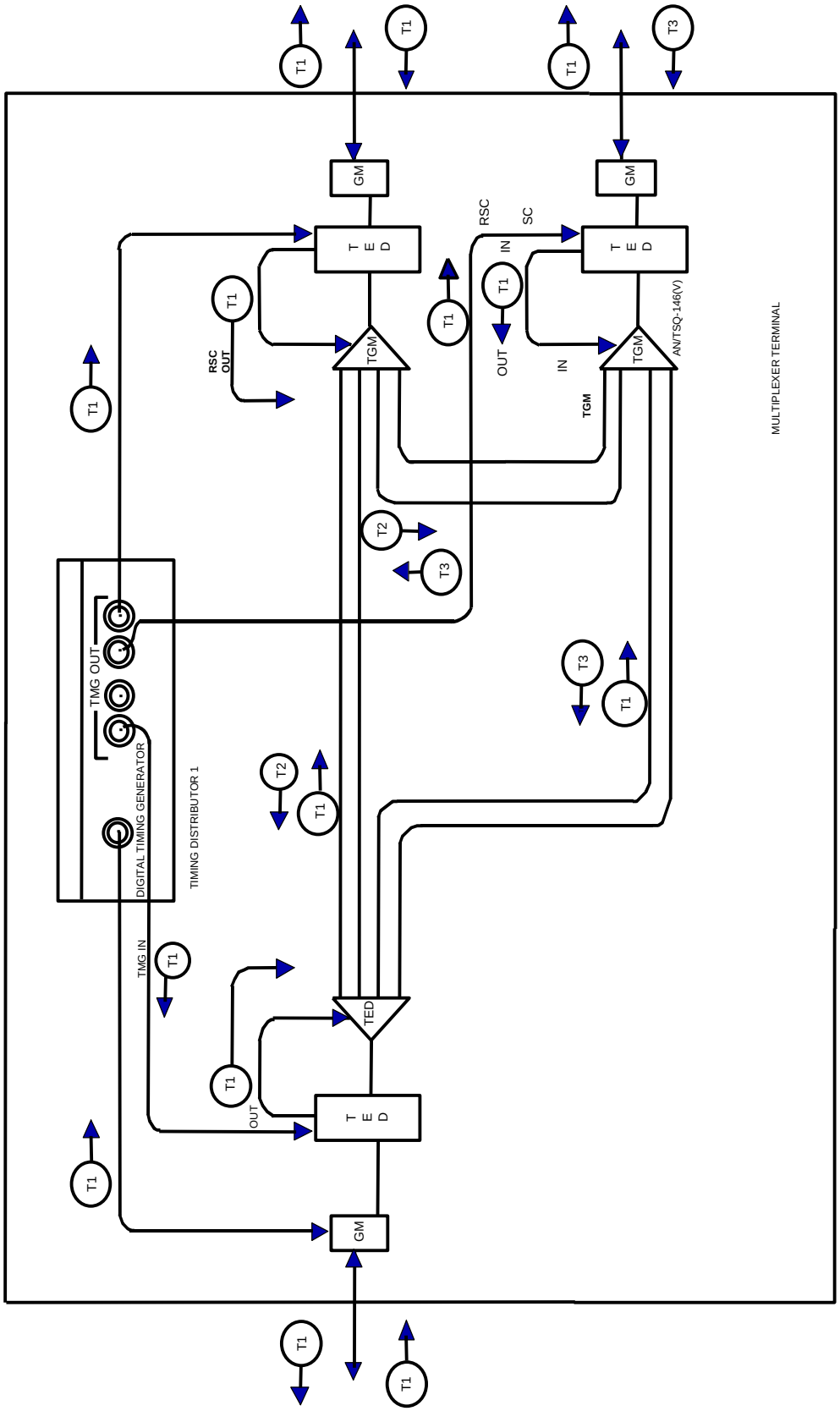

Figure A-C-16. AN/TSQ-146 Slave Timing--Equal Rate DTGs

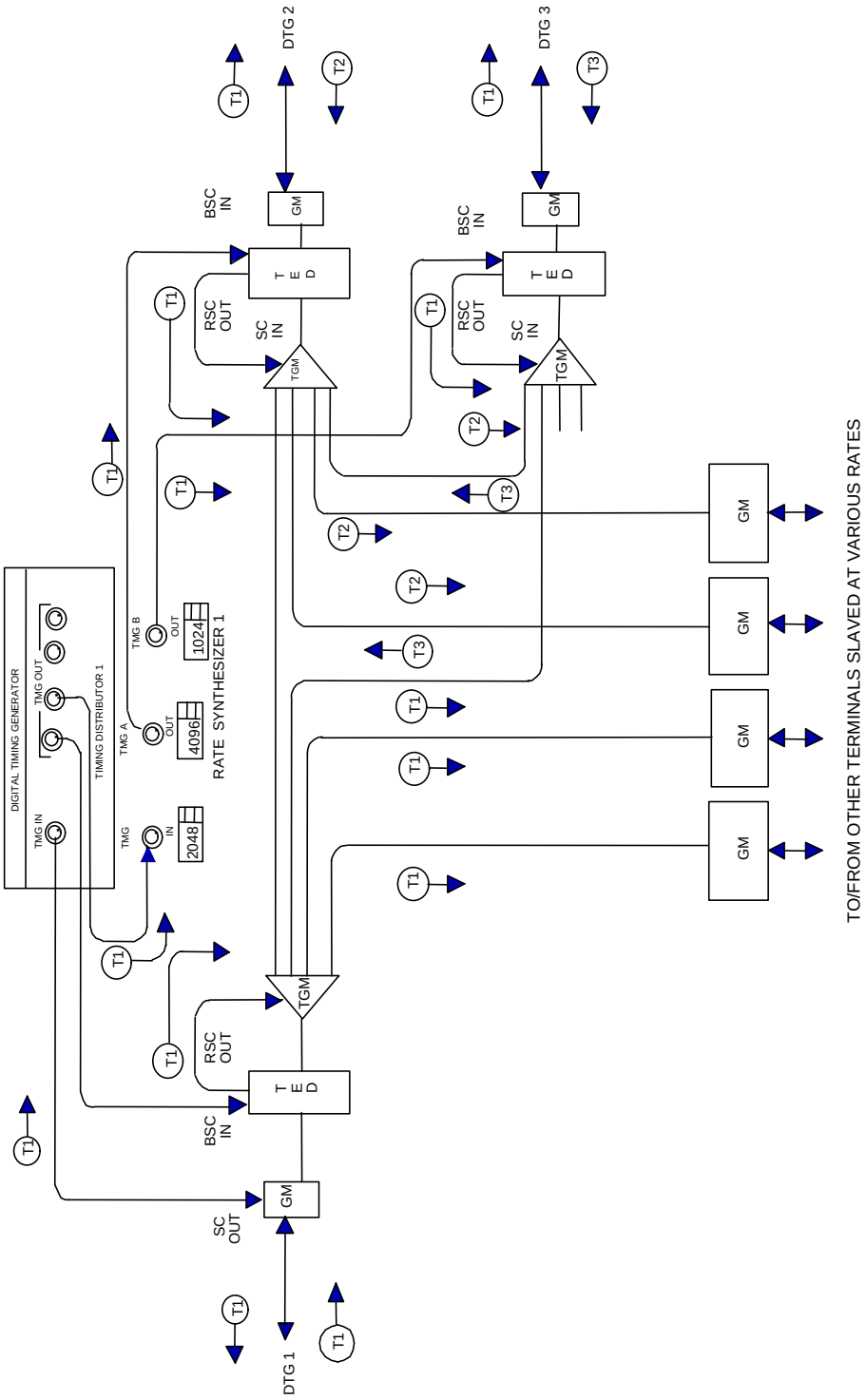

Figure A-C-17. AN/TSQ-146 Slave Timing--Unequal Rate DTGs

Timing T3 is recovered from DTG 3 and used to time the low-side groups from TGM 3.

(4) AN/TSQ-146 Timing Using the Autophase Function. The DCPG autophase function is required when a TED is connected to the TGM group 1 port. Figure A-C-18 illustrates an example of how the autophase function is used when the AN/TSQ-146 is operating in the slave mode. The purpose of the autophase function is to maintain the proper phase relation between the station clock provided to the TED and the TGM group output data. In the AN/TSQ-146, the TED RED station clock is provided to the autophase circuitry where it is used to phase align the group output data with the clock. In the figure, timing T1 is recovered from the supergroup (DTG 1) receive side and provided to the RS as the master timing reference source. The RS provides T1 to the TGM (via TED 1) where it is used to time the transmit side of DTG 1. The RS also provides T1 to TED 2 as a BSC. TED 2 provides T1, in the form of a RSC, to the DCPG autophase circuitry where it is used to align the TGM group output data with the BSC provided to TED 2. The receive side of DTG 2 is timed into the TGM buffer by timing T2. It is timed out of the buffer by T1.

(5) AN/TSQ-146 Timing Without the DCPG. If the DCPG fails or is not installed, each TGM is slaved to a clock recovered from the receive side of its supergroup. The recovered clock is used to time the low-side groups out of the TGM. In turn, the LGMs are slaved to timing recovered by the TGM to which they are connected. The LGMs can also be slaved to timing recovered from the receive side or a group going to a distant assemblage without passing through a TGM.

(a) There are two methods for connecting a TED to the supergroup port of a TGM or the group side of an LGM. The slave mode would typically be used at a multiplex terminal where loops are being concentrated. The master mode would be used at a location where a station clock is provided.

(b) LGM or TGM Supergroup Through TED (Slave Mode). Figure A-C-19 depicts a typical configuration of an MD-1026 group modem, KG-81 TED, and an LGM or TGM remote station where timing is looped back from the group (or supergroup). The multiplexer (LGM or TGM) should be operated in a station clock mode using the RED station

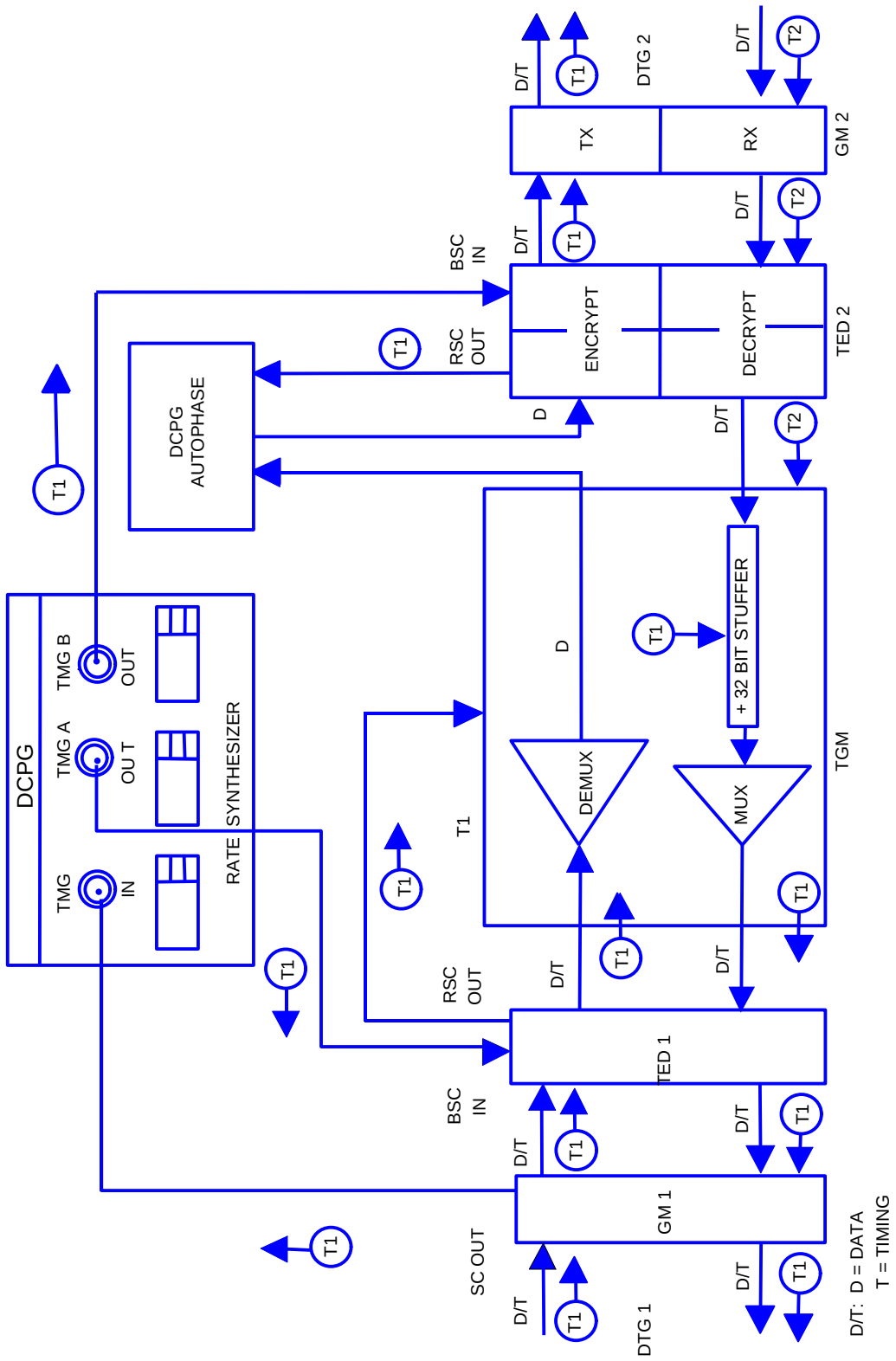

Figure A-C-18. AN/TSQ-146 Timing with Autophase Function

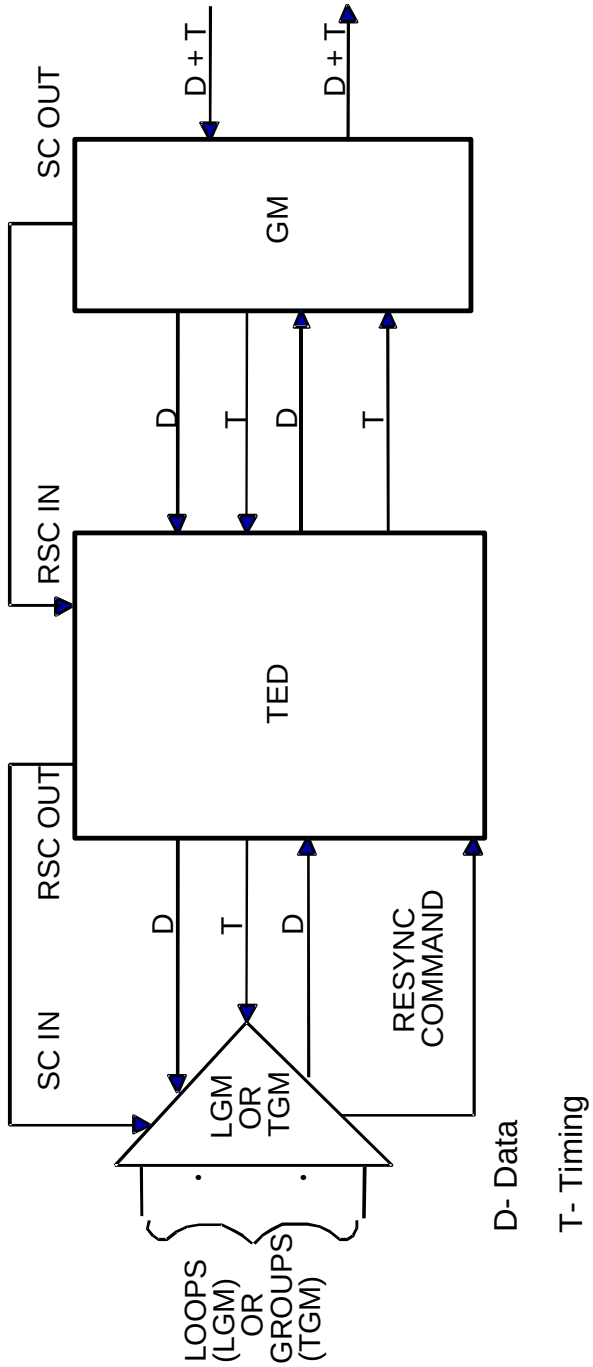

Figure A-C-19. Typical LGM or TGM Supergroup Configuration (Slave Mode) Without Master Timing Source

clock from the TED. (Timing should not be looped back in the multiplexer.)

(c) LGM or TGM Supergroup Through TED (Master Mode). Figure A-C-20 depicts a typical configuration of a group modem, TED, and an LGM or TGM at a station that is providing master timing. The multiplexer (LGM or TGM) should be operated in a station clock mode using the RED station clock from the TED. (Timing should not be looped back in the multiplexer.)

(d) Typical Timing Configuration of the OCU-I. Figure A-C-21 illustrates a typical use of the OCU-I to provide timing distribution. In the figure, the source of timing is from the left (the side with group modem 1). The OCU is provided timing from the group modem and provides timing at to KG-81s 2 and 3. Note that to provide timing to TEDs 2 and 3, the group-2 timing output from the OCU must be double loaded, and the data rates for the two groups must be equal. This configuration may occasionally experience difficulty because of the lack of an autophase circuit with the OCU-I. This is not a deficiency when the DCPG is installed in the AN/TSQ-146.

13. AN/TSQ-111 CNCE Timing. The CNCE can operate in two basic timing modes: atomic standard or slaved to one of the incoming digital groups. CNCE timing is provided by a timing subsystem that is controlled by the atomic standard or the group input reference frequency. The timing subsystem provides timing for all synchronous transmissions originating in or retransmitted by the CNCE. The timing functions consist of selecting one of three signal sources as a reference, creating six basic clock frequencies, and distributing clock signals to shelter equipment. A functional diagram of the timing subsystem is shown in Figure A-C-22.

a. Timing Reference Sources. Operation of the timing subsystem is based on a reference frequency received from one of three sources as follows:

(1) Atomic Standard. The primary reference for the shelter is the CBFS, which provides a highly stable (one part in 10^{12}) 1 MHz reference frequency to the timing subsystem. This reference frequency is

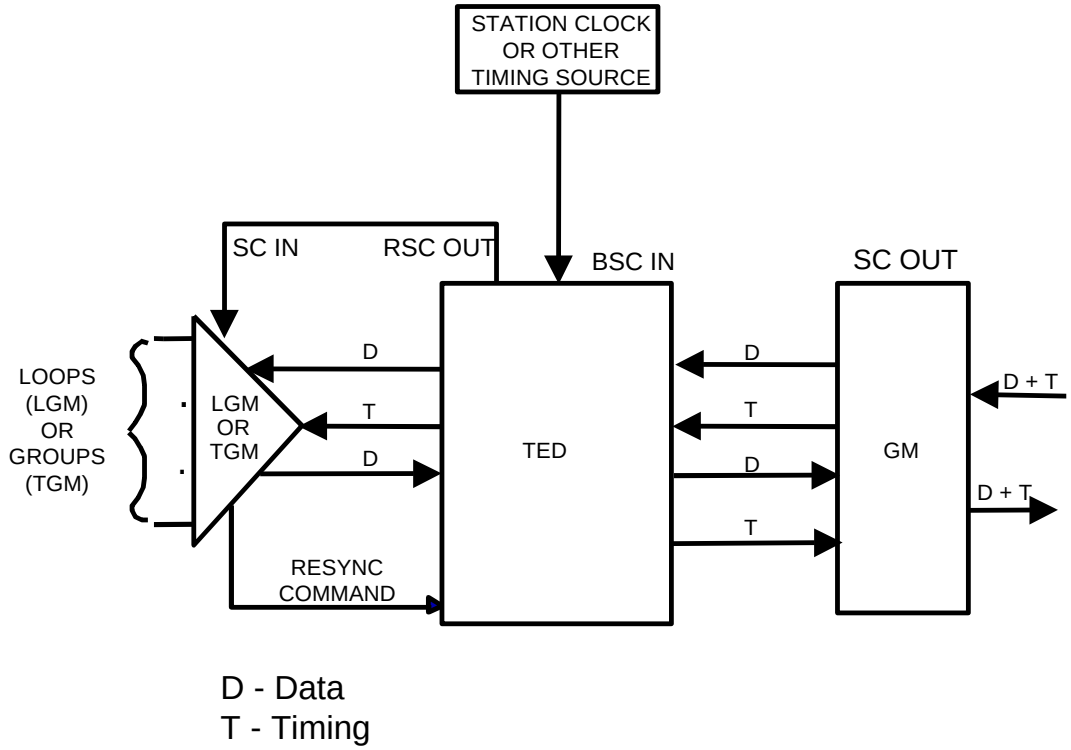

Figure A-C-20. Typical LGM or TGM Supergroup Configuration (Master Mode)

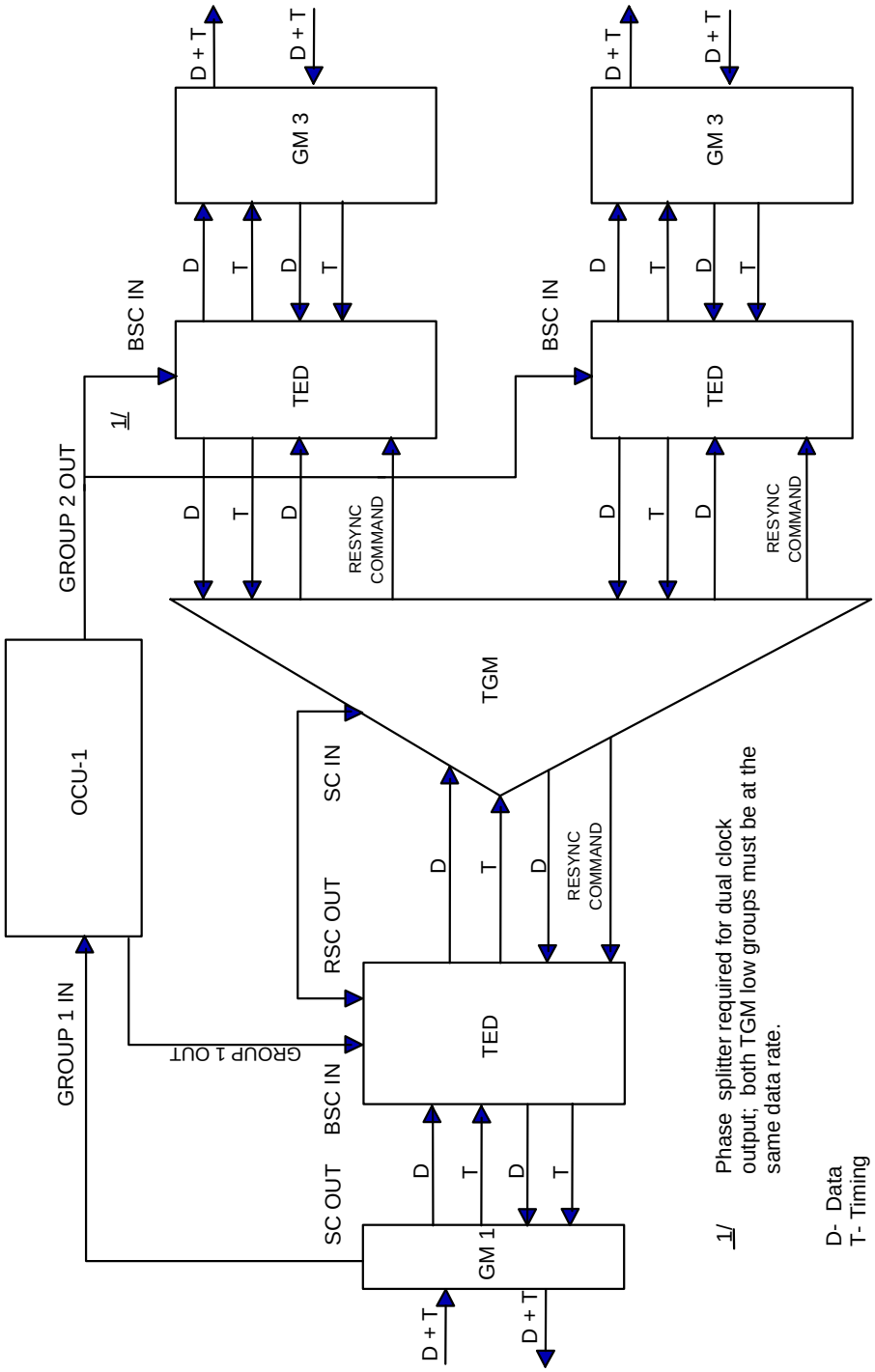

Figure A-C-21. OCU-I Application Providing Timing for Two Equal TGM Groups

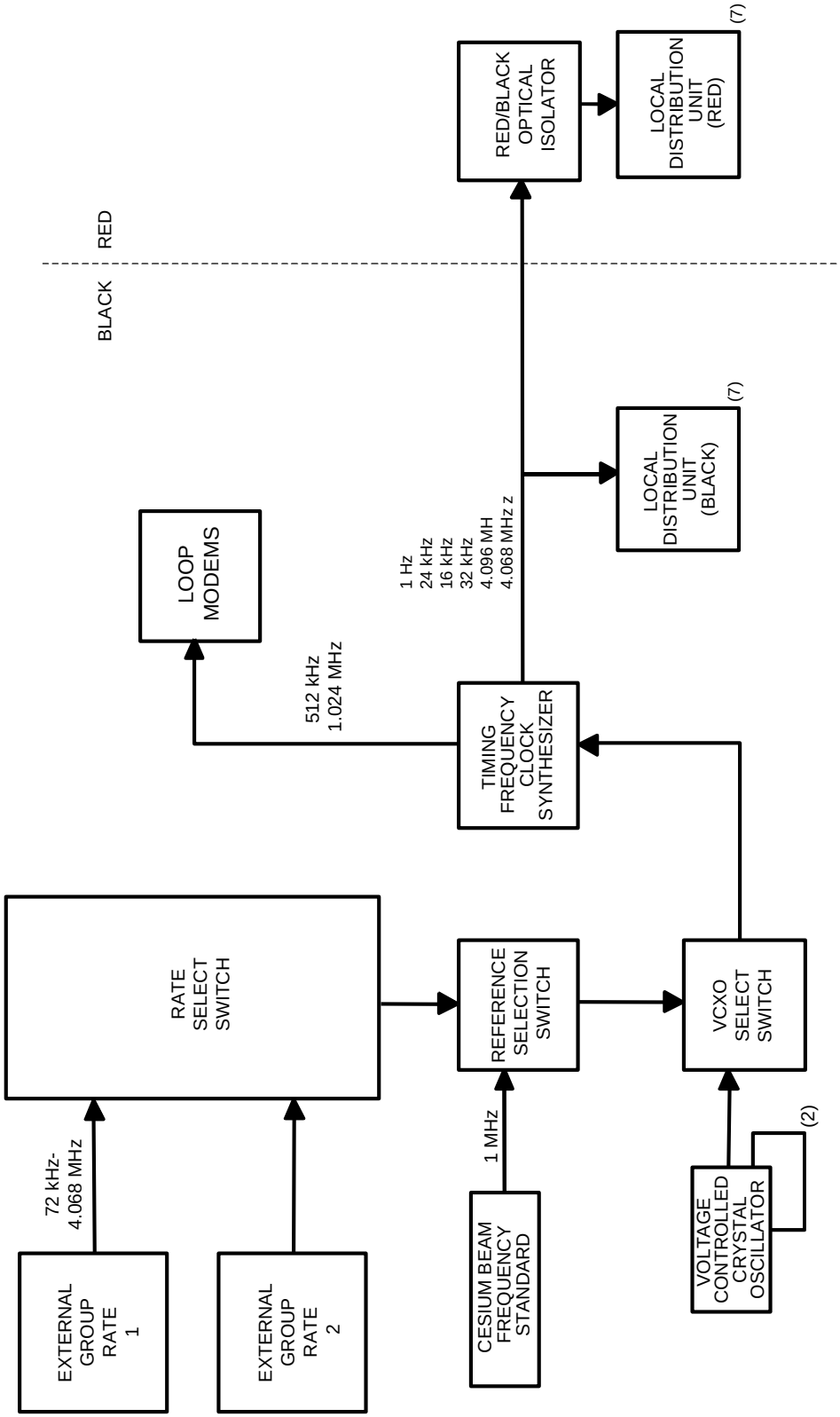

Figure A-C-22. AN/TSQ-111 CNCE Timing Subsystem (Simplified)

applied to the VCXO when the reference selector switch is in the ATOMIC STD position.

(2) Group Inputs. The other two reference sources are timing signals derived from one of two external groups. The group input reference is used when the CBFS is offline and when the reference selector switch is in the GROUP INPUT MAN OVERRIDE position. The specific group reference source is selected by placing the GROUP DERIVED RATE SELECT switches in the RATE 2 position. The timing signal used may be any one of the group rates listed on Figure A-C-22. If the primary source from the CBFS is lost, the group input is automatically used to replace it. Should the group rate selected for use fail, then the second group rate is automatically selected for use.

b. AN/TSQ-111 CNCE Timing Flow

(1) Figure A-C-23 shows the CNCE timing flow when the atomic standard is used as the reference source. This mode of operation is selected by placing the reference select switch in the Atomic Standard position. In Figure A-C-23, timing T1 is derived from the 4.608-MHz and 8.192-MHz clock frequencies provided to the CRF group output and clock select function by the group frame synchronizer. Within the group output and clock select function, the two frequencies are divided down into the 12 clock rates (144, 256, 288, 512, 576, 1,024, 1,152, 1,536, 2,048, 2,304, 4,096, and 4,608 kHz) by the clock generator. The clock rates are then applied to the multiplexer associated with the group output circuit. On the receive side, the received data are shown with associated timing T2. The received data are clocked into the group input and elastic buffer (±160-bit) by timing T2. Data are clocked out of the buffer and into the channel reassignment matrix by a 8.192- or 9.216-MHz clock frequency received from the group frame synchronizer.

(2) Figure A-C-24 shows the CNCE timing flow when the reference source is derived from one of the received groups. This mode of operation is selected by placing the reference select switch in the Group Input Manual Override position. Timing T2 from the selected receive group is picked off at the BLACK intermediate distribution frame (IDF) and sent to the timing subsystem where it is applied to the VCXO as the reference standard. In Figure A-C-24 timing T1 is derived in the same manner as discussed in the preceding paragraph. Data from the received group are timed into the 160-bit buffer by T2.

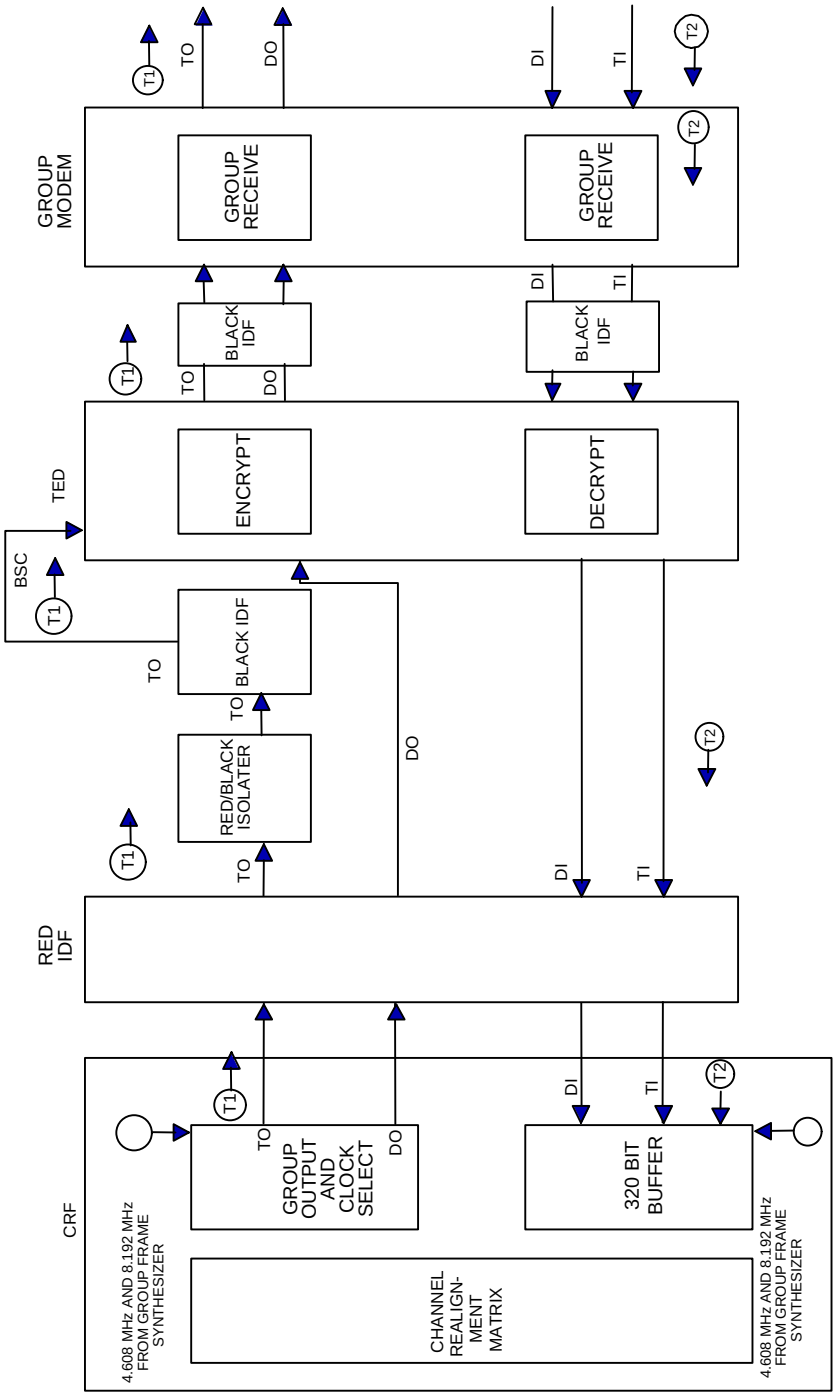

Figure A-C-23. CNCE Timing Flow, Atomic Standard Reference Source

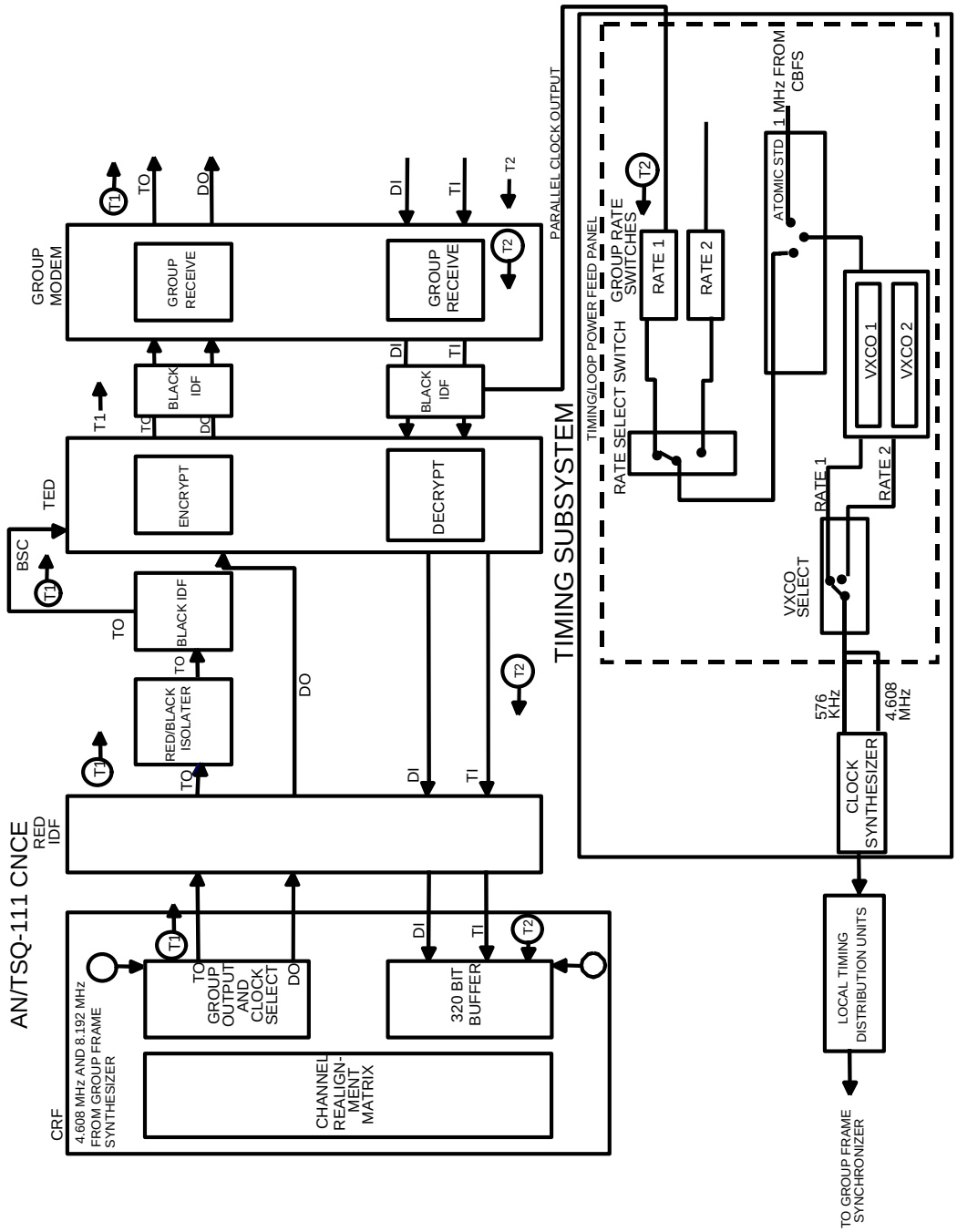

Figure A-C-24. CNCE Timing Flow, Group Input Reference Source

Data are timed out of the buffer and into the channel reassignment matrix by the 8.192- or 9.216-MHz clock received from the group frame synchronizer.

14. AN/TTC-39 Series CS Timing Flow. The timing and synchronization required by the switch are provided by the timing subsystem. This subsystem consists of a master timing generator (MTG), three local timing generators (LTG), and a space division switching group (SDSG) timing generator. (A more detailed discussion of the AN/TTC-39 series CS timing system is found in CJCSM 6231.02A.) Basically, the AN/TTC-39 series timing system is capable of operating in two timing modes: master and slave.

a. Master Timing Mode. When the switch is operated in the master timing mode, the Sync-Source switch must be in the MA (master) position. This phase-locks the crystal oscillator controlling the MTG to the internal rubidium standard. Figure A-C-25 shows the timing flow when the switch is configured for master timing. In the figure, the output of the MTG (labeled T1) is used to time the internal operation of the switch and all transmitted DTGs. The receive side of DTG 1 is shown with associated timing T2. The receive data in DTG 1 is clocked into the ± 256-bit buffer by timing T2 and clocked out of the buffer by timing T1 provided by the MTG. A similar action takes place on the receive side of all other DTGs.

NOTE: The buffer size depends on the voice digitization rate used. For a VDR of 32 Kbps the buffer size is ± 256 bits. If the VDR is 16 Kbps the buffer size is ± 128 bits.

b. Slave Timing Mode. When the switch is operated in the slave timing mode, the Sync-Source must be set to one of four (1, 2, 3, or 4) positions. Each switch position represents an incoming DTG that can be used as a reference source for the MTG. Note that only DTGs 1, 2, 16, and 17 can be used as timing sources. Additionally, the Group-Rate switch on the MTG selector panel must be set to the rate of the DTG selected as the timing source. Figure A-C-26 shows the timing flow when the AN/TTC-39 series CS is slaved to timing recovered from an incoming DTG. In the figure, the switch is deriving its timing from group 1.

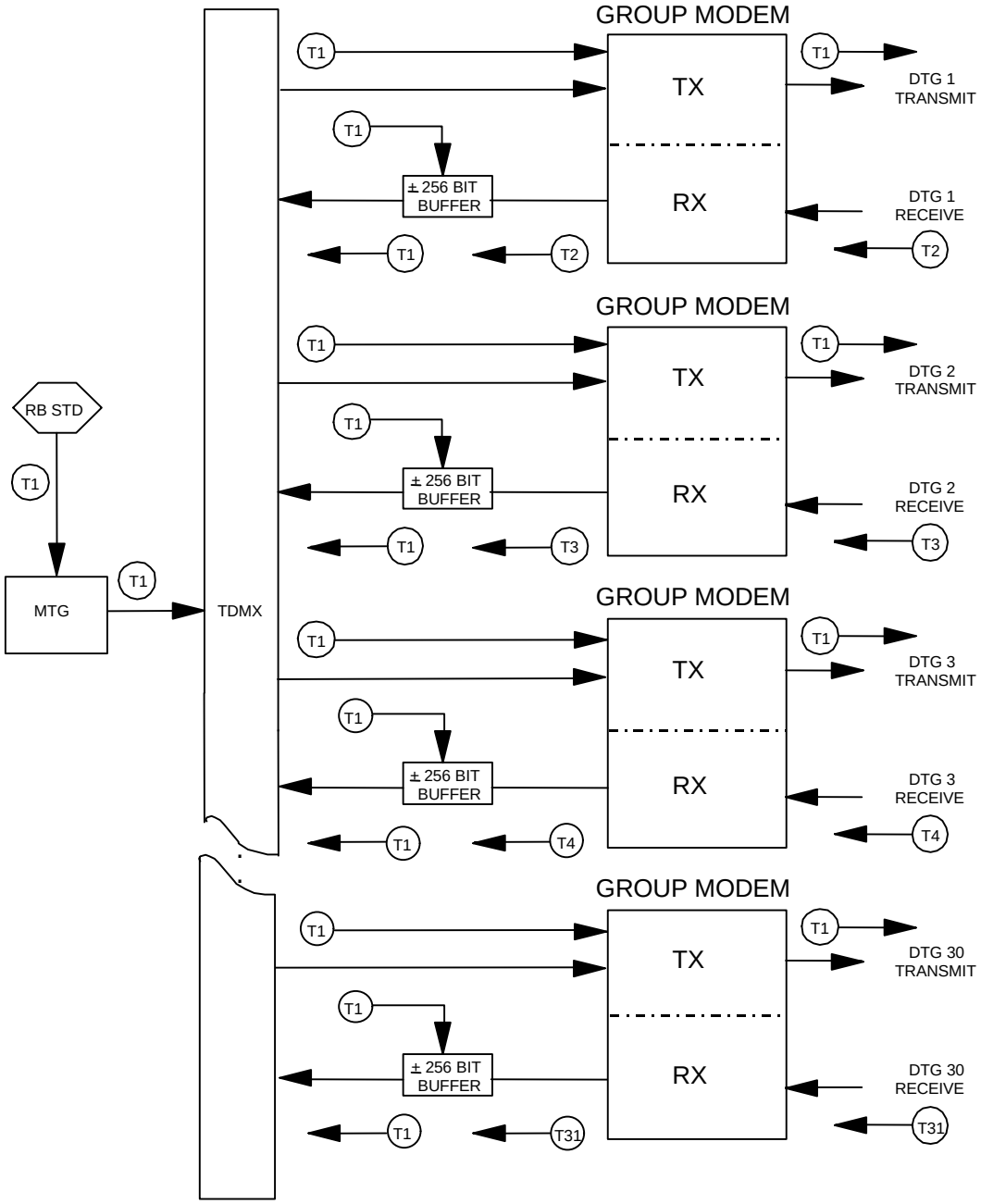

Figure A-C-25. AN/TTC-39 Series CS Timing Flow, Master Timing Mode

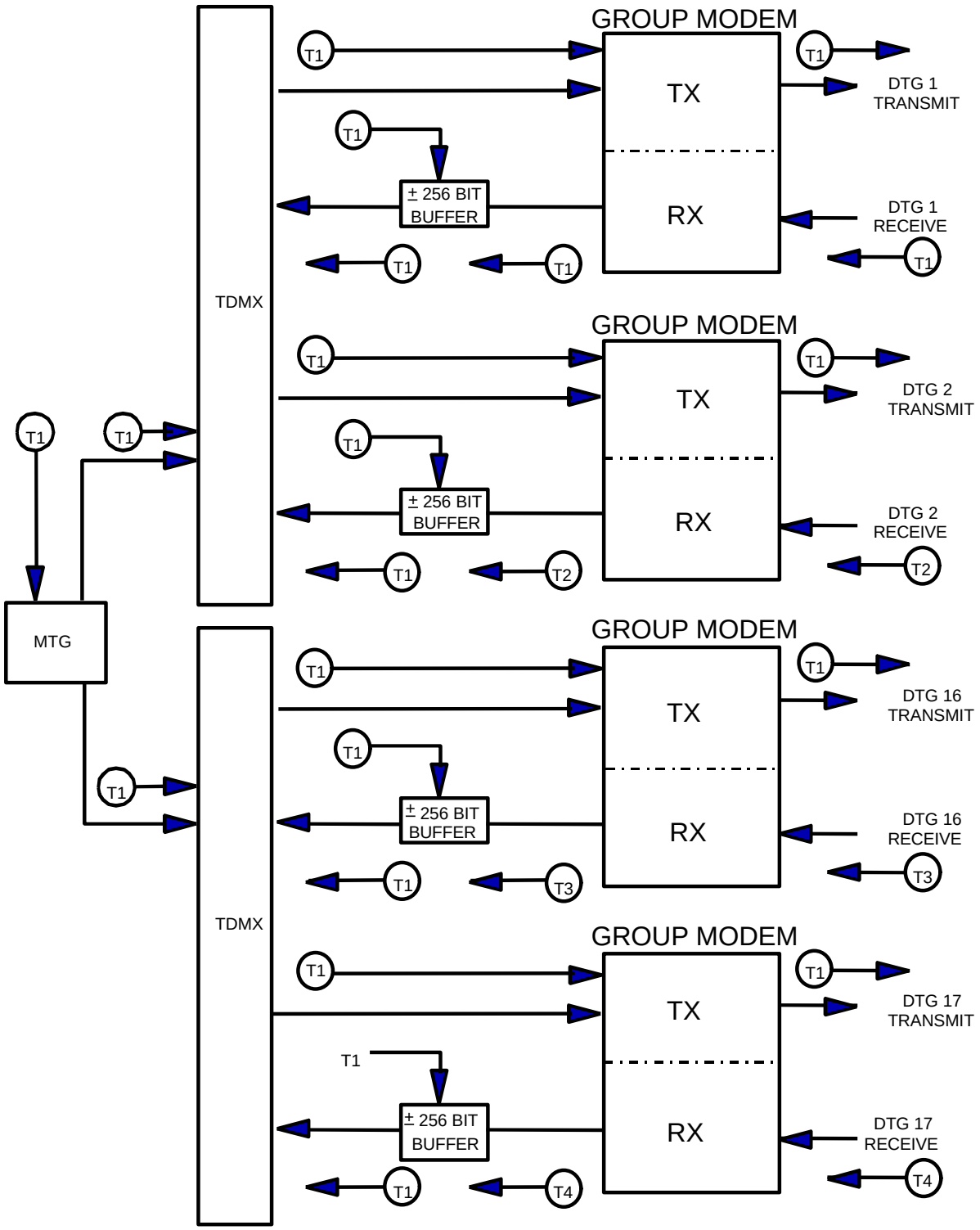

Figure A-C-26. AN/TTC-39 Series CS Timing Flow, Slave Timing Mode

The crystal oscillators controlling the MTG are phase-locked to timing T1. Thus, T1 is used to time the internal operation of the switch and all transmitted DTGs. The receive side of group 2 is shown with associated timing T2. DTG 2 receive data are clocked into the ±256-bit buffer by T2 and out of the buffer by T1. A similar action takes place on the receive side of all other DTGs.

15. AN/TTC-42 Timing Flow. The AN/TTC-42 has two redundant, stable VCXOs, either of which serves as the master oscillator for the switch; the other is standby. The VCXOs are accurate to 1 part in 10^9. The VCXO functioning as the master provides operating frequency and phase to two sets of redundant primary rate generators, which then provide clock frequencies to the other subsystems of the switch. The frequencies are commensurate with the switch operating rate (32 or 16 Kbps) as selected by the operator. The AN/TTC-42 provides timing on the transmission side of DTGs and digital single channels (loops and trunks). The AN/TTC-42 is capable of recovering incoming timing from two DTG modems. A 0.5-second flywheel capability is provided. Bit buffer sizes are 128 (DTG Nos. 1, 3, 4, 6, and 7) and 512 (DTG Nos. 2 and 5). The AN/TTC-42 is capable of operating in two timing modes: master and slave.

a. Master Timing Mode. In the master timing mode, the AN/TTC-42 serves as the master timing source for itself, other AN/TTC-42s, and SB-3865s. In network operations, a second AN/TCC-42 initially functioning in the slave mode can be designated from serve as an alternate master timing mode. A changeover of the first switch to the slave timing mode is made only after the DTG (from the second switch) serving as the timing source is activated. Timing mode change from master to slave and vice versa is under control of a manually operated Timing Control Source Select Switch. Figure A-C-27 shows the timing flow for the AN/TTC-42 in the master timing mode.

b. Slave Timing Mode. The AN/TTC-42 can function as a timing slave to a master timing source with a timing stability equal to or greater than that of the switch VCXO. The AN/TTC-42 derives slave timing from DTG modem No. 1 (4-1/2 to 18 channels) or DTG modem No. 7 (8 to 72 channels) (diphase or dipulse operation). With the Timing Control Source Select Switch in the slave source position, the modem select switch is manually placed by the operator in the Modem 1 or Modem 7 position. If the timing signal cannot be recovered from the selected modem, the AN/TTC-42 will automatically shift to the second DTG as the

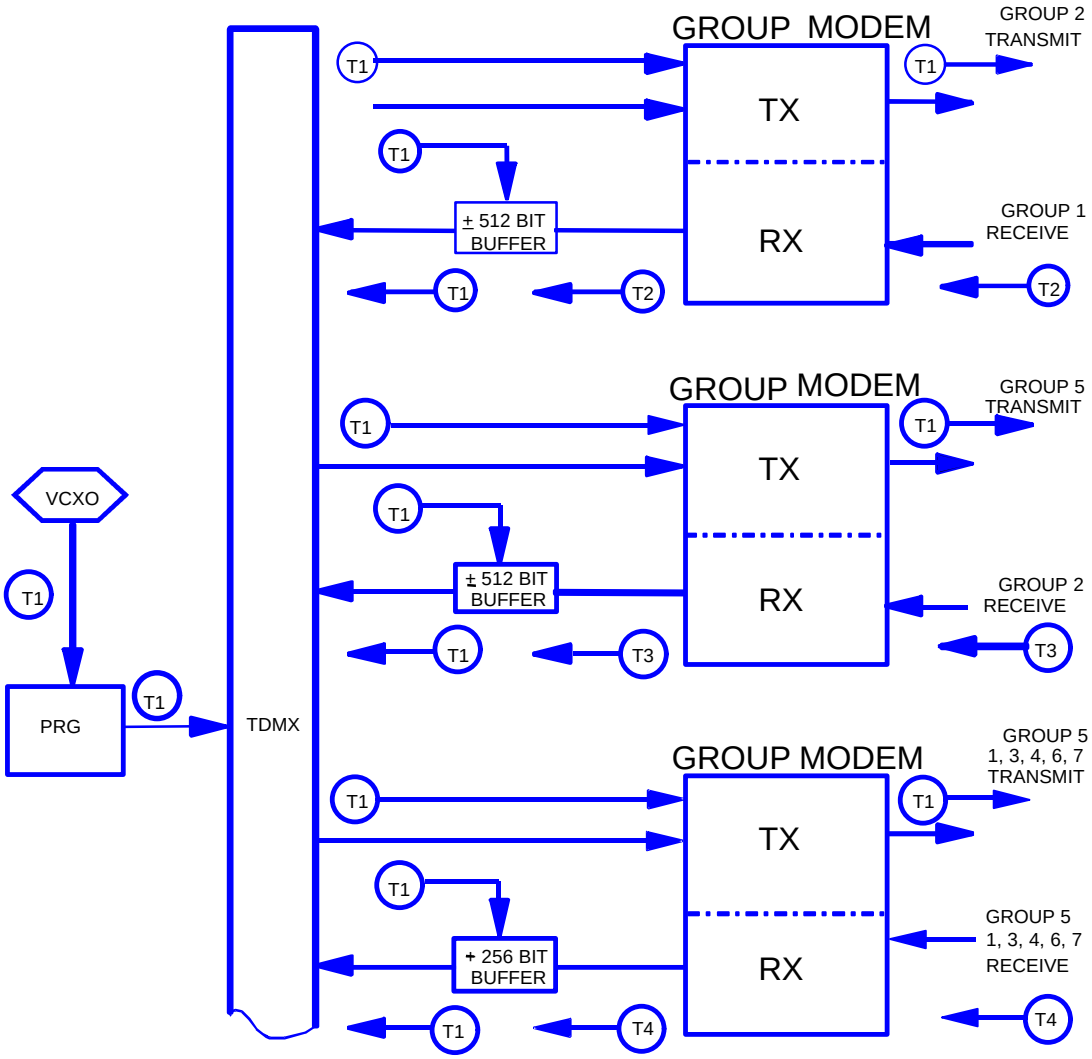

Figure A-C-27. AN/TTC-42 CS Timing Flow, Master Timing Mode

timing source. If the timing signal cannot be recovered from either timing source upon expiration of the 0.5-second flywheel period, the AN/TTC-42 will automatically revert to the master timing mode. Figure A-C-28 shows the timing flow for the AN/TTC-42 in the slave timing mode.

16. SB-3865 Timing Flow

a. General. The SB-3865 switch module has one stable VCXO that is accurate to 1 part in 10^8. The VCXO provides operating frequency and phase to a primary rate generator, which then provides clock frequencies to the other subsystems of the switch module. The frequencies are commensurate with the switchboard operating rate (32 and 16 Kbps) as selected by the operator. The SB-3865 switch module provides timing on the transmission side of DTGs and digital signal channels (loops and trunks). In SB-3865 two- and three-module stack configurations, one switch module is the master timing source for the stack, and the other modules derive timing via the interconnecting stacking cables. Internal and external timing source selection is accomplished by means of a Timing Source Selection Switch mounted on the switch monitor control panel. Timing source selection is accomplished manually by the switch operator. There are no automatic timing source selection or switchover functions. The SB-3865 is capable of recovering incoming timing from any one of the three DTG modems or two signal channel digital terminations. A 0.5-second flywheel capability is provided. Bit buffer sizes are 256 (DTG Modems 1 and 3), 512 (DTG Modem 2), and 64 (digital line terminations 25 and 29). The SB-3865 is capable of operating in two timing modes: master and slave.

b. Master Timing Mode. In the master timing mode, the SB-3865 serves as the master timing source for itself and other SB-3865s. The master timing mode is always selected for SB-3865 COLD START initialization and operation before the availability of a slave timing source. In an SB-3865-only network, one SB-3865 serves as the timing master; all others operate in the slave timing mode. Figure A-C-29 shows the timing flow for the SB-3865 master timing mode.

c. Slave Timing Mode. The SB-3865 can function as a timing slave to a master timing source with a timing stability equal to or greater than that of the switchboard VCXO. The SB-3865 derives slave timing from

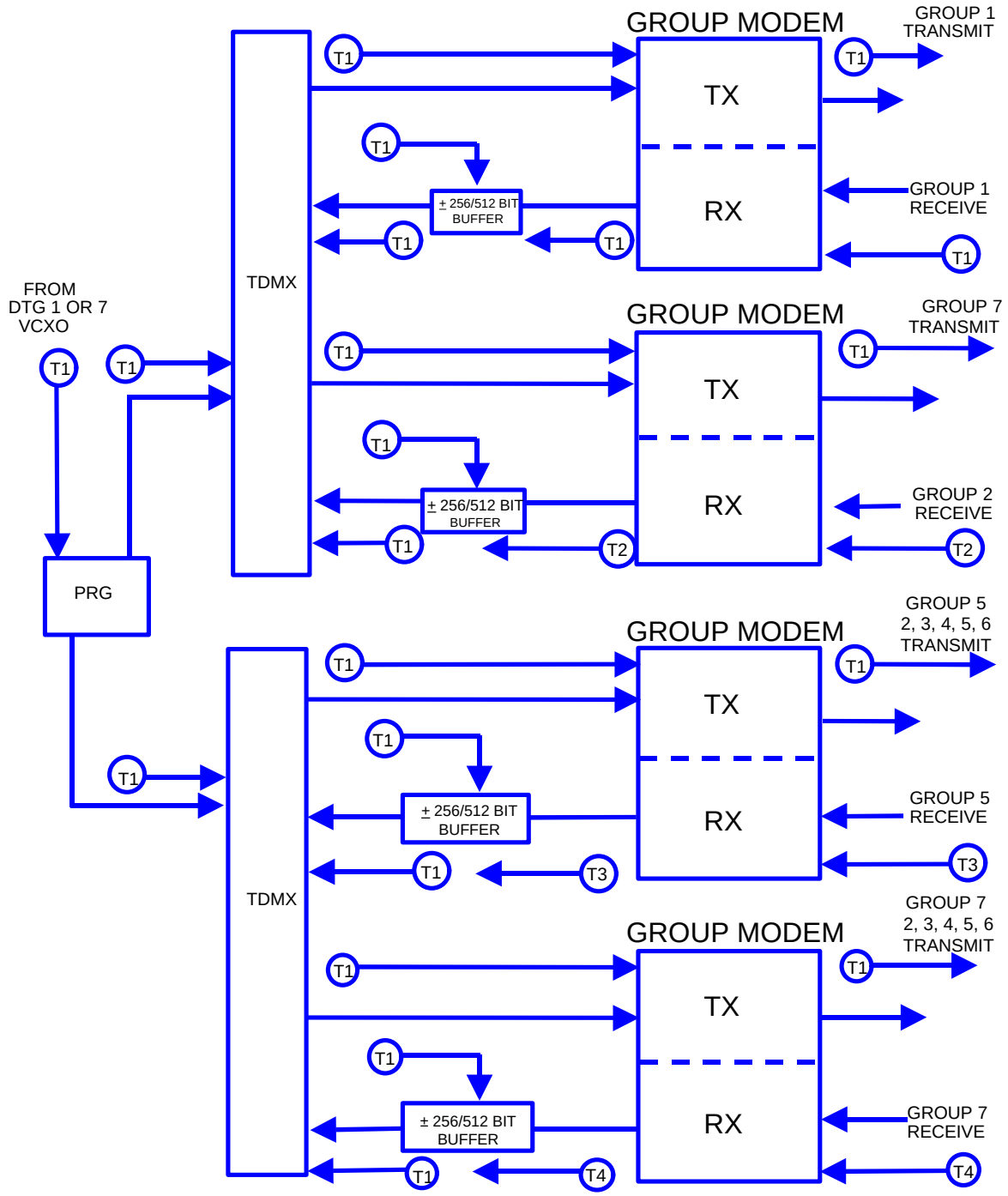

Figure A-C-28. AN/TTC-42 CS Timing Flow, Slave Timing Mode

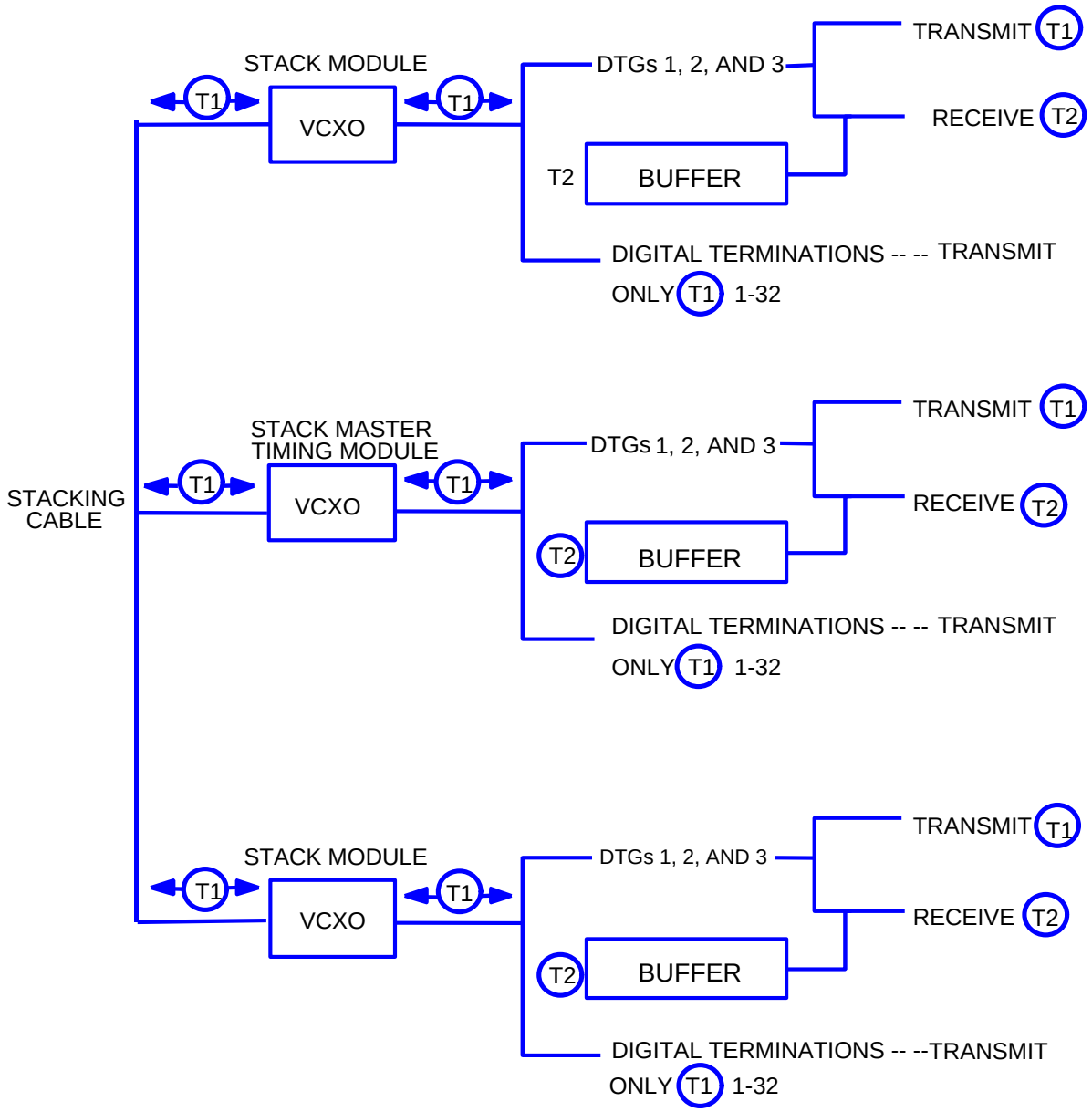

Figure A-C-29. SB-3865 Switchboard Timing Flow, Master Timing Mode

DTG Modems 1, 2, and 3 and Single Channel Modems A (Termination No. 25) and B (Termination No. 29). Within a stack configuration, the slave timing sources used must be those integral to the switch module serving as the timing master for the stack. Figure A-C-30 shows the timing modes: master and slave.

17. AN/TRC-170 Timing Flow. The AN/TRC-170 can be operated in three basic timing modes. Timing can be (1) recovered from an incoming cable-side group (GROUP or MISSION mode), (2) recovered from the received radio supergroup (MISSION mode), or (3) derived from the internal rubidium standard (MASTER mode). With the fielding of the AN/TSQ-111 CNCE and AN/TTC-39 series CS, the predominant timing mode for the AN/TRC-170 is the group mode. The timing flow for each mode is discussed separately in the following subparagraphs:

a. Group Timing Mode. Figure A-C-31 depicts the timing flow in a simple configuration where the AN/TRC-170 uses timing from an incoming group on the cable side. In this case timing T1 is recovered from the incoming group, passed to the tropo modem, and used to time the transmitted data. (The actual transmitted signal is at a different rate from the data on the cable side. The tropo modem derives this rate from the cable timing.) There is no buffering of data. Incoming timing T1 must be accurate to within 1.5 parts in 10^7 with respect to the local rubidium standard. If the timing does not meet this accuracy requirement, the tropo modem will automatically switch to a master mode. In the receive direction, timing T2 is recovered from the incoming RF signal. Timing T2 is then passed through the group modem and out the cable side of the AN/TRC-170. Slave timing sources used must be those integral to the switch module serving as the timing master for the stack. Figure A-C-30 shows the timing flow for the SB-3865 slave timing mode.

b. Group Timing Mode With TGM. Another configuration using group timing is shown in Figure A-C-32. In this case, a TGM has been added to the configuration. Timing T1 is received and recovered in the group modem. Timing T1 is then patched to the dejitterizer patch panel where it is split and fed to both the group timing input port on the TGM and the tropo modem. The tropo modem rate multiplies the timing signal and provides timing T1 to the station clock input of the TGM. (The TGM is operated in a station clock mode.) Timing T1 is then used to time

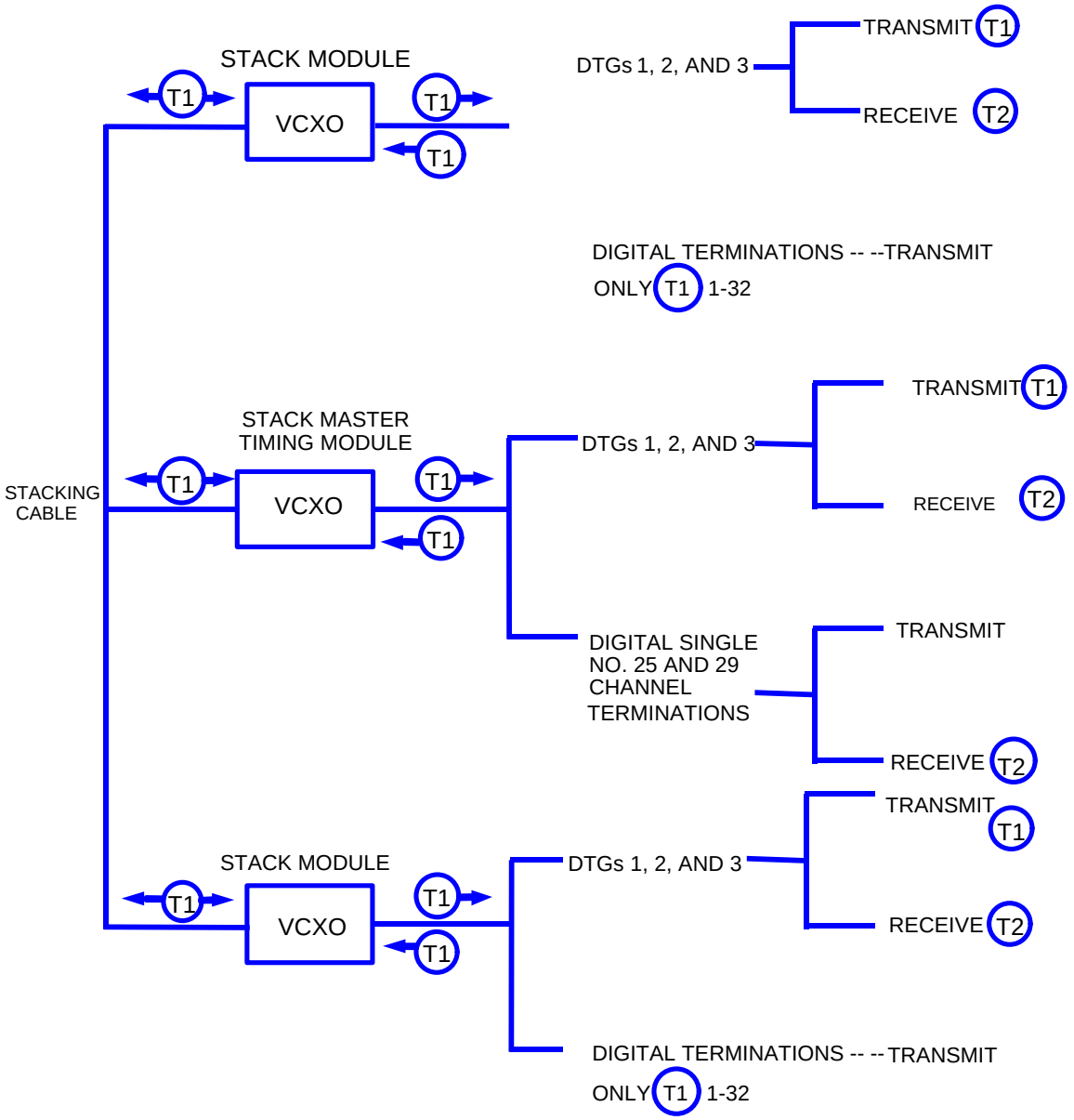

Figure A-C-30. SB-3865 Switchboard Timing Flow, Slave Timing Mode

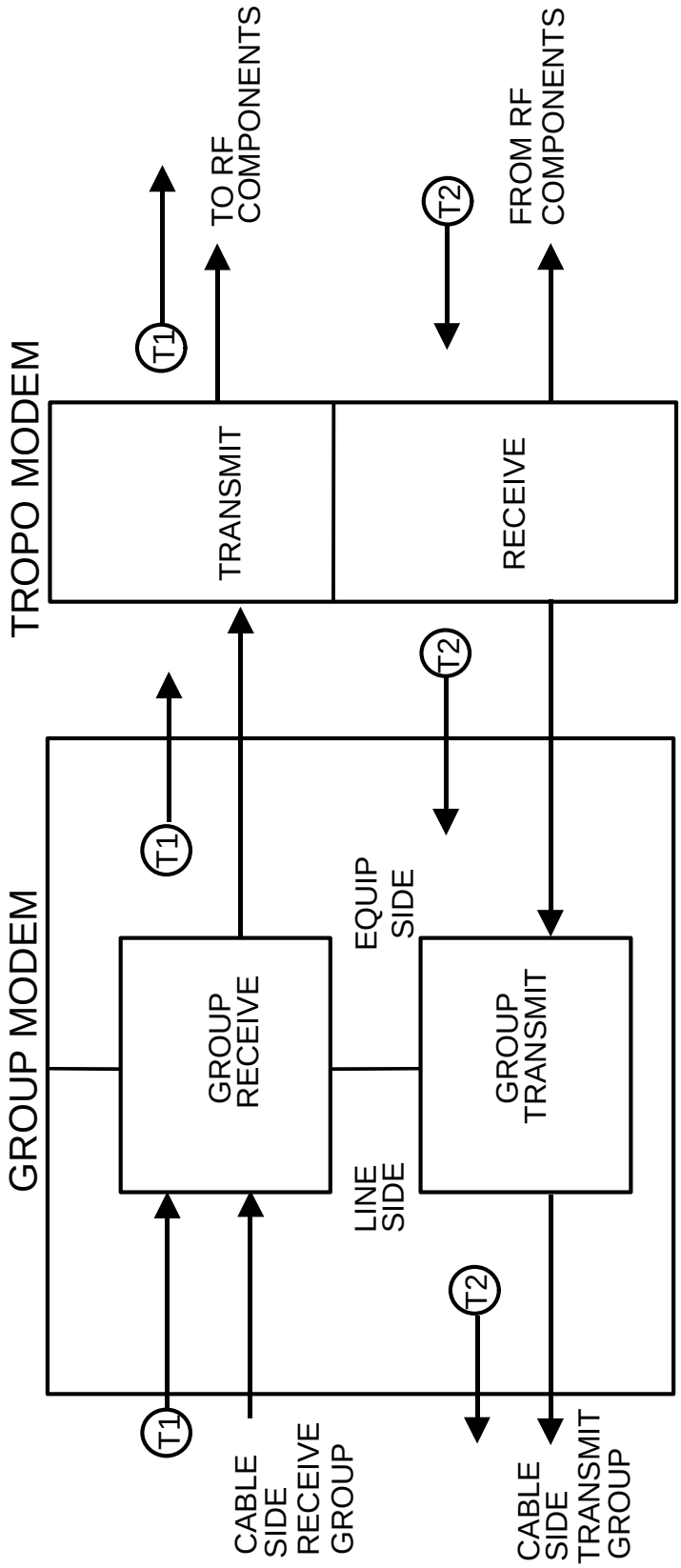

Figure A-C-31. AN/TRC-170 Group Timing

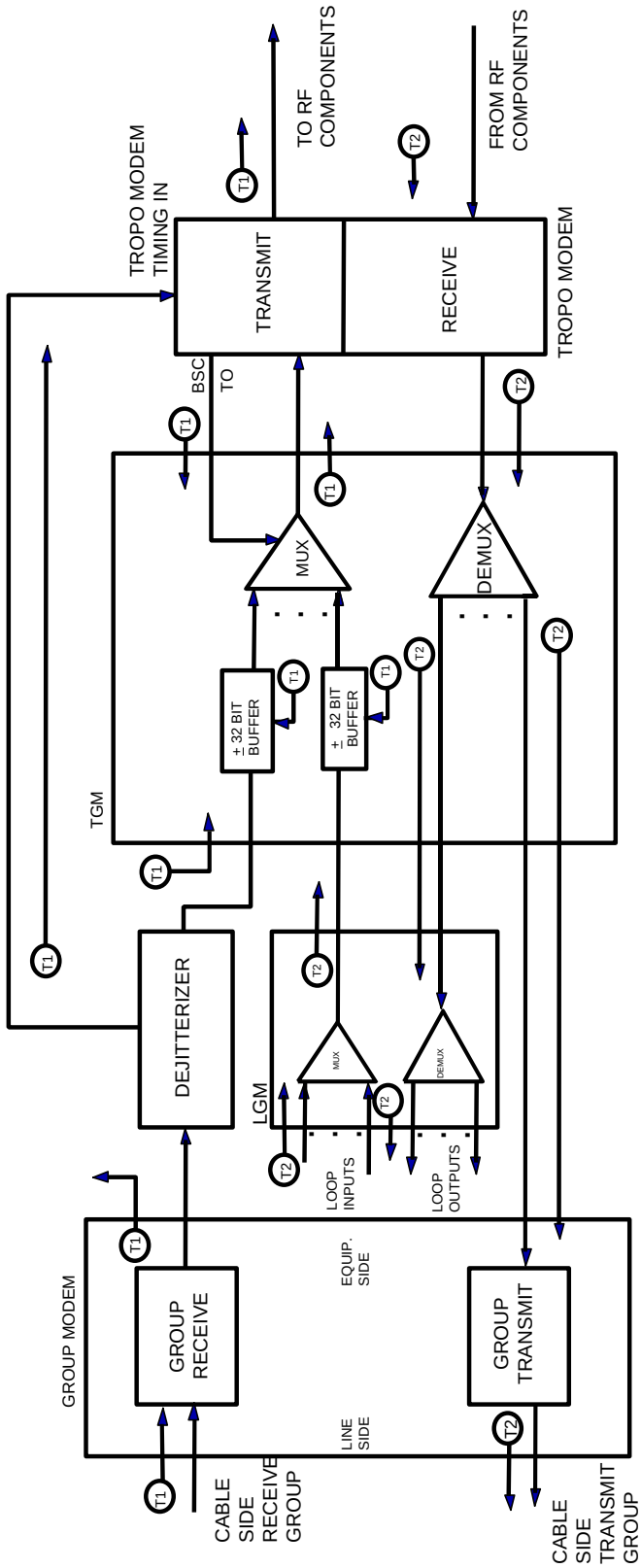

Figure A-C-32. AN/TRC-170 Group Timing With TGM

all data transmitted from the TGM to the tropo modem. The tropo modem uses timing T1 to time the transmitted data. (The actual transmitted signal from the tropo modem derives the mission rate from timing T1.) Incoming timing must be accurate to within 1.5 parts in 10^7 with respect to the local rubidium standard. If the timing does not meet this accuracy requirement, the tropo modem will automatically switch to the master mode.

(1) In the receive direction, timing T2 is recovered from the incoming RF signal in the tropo modem. Timing T2 is passed to the TGM where it is used to time the transmitted data on all four low-rate groups.

(2) If an LGM is connected to one of the TGM ports, it recovers timing T2 from the group received from the TGM. (The LGM is operated in a loopback timing mode.) The LGM will then use timing T2 to time its transmitted loops and the transmitted group fed to the TGM. The buffering of timing differences occurs in the $\pm$32-bit buffer at the group input to the TGM.

c. Master Station Timing Mode. Figure A-C-33 depicts the timing flow in the master station timing, mode with the TGM in the configuration. In this mode timing, T1 is provided by the clock generation circuitry in the AN/TRC-170. (The rubidium standard controls the clock circuitry by providing a highly stable reference frequency.) The resulting clock is accurate to 1 part in 10^{11}. The tropo modem provides timing T1 to the TGM at the station clock input. (The TGM is operated in a station clock mode.) All data are clocked out of the TGM using timing T1. The tropo modem uses T1 to time the data transmitted from the tropo modem. (The actual transmitted signal from the tropo modem is at a different rate from the output of the TGM. The tropo modem derives the mission rate from the input rate.)

(1) In the receive direction, timing T2 is recovered from the incoming RF signal. Timing T2 is then passed to the TGM where it is used to time the transmitted data on all four low-rate groups.

(2) Timing on an incoming group on the cable side is recovered in a group modem. This is shown as T2 in the figure. Timing T2 clocks data into the $\pm$ 32-bit buffer at the TGM group input.

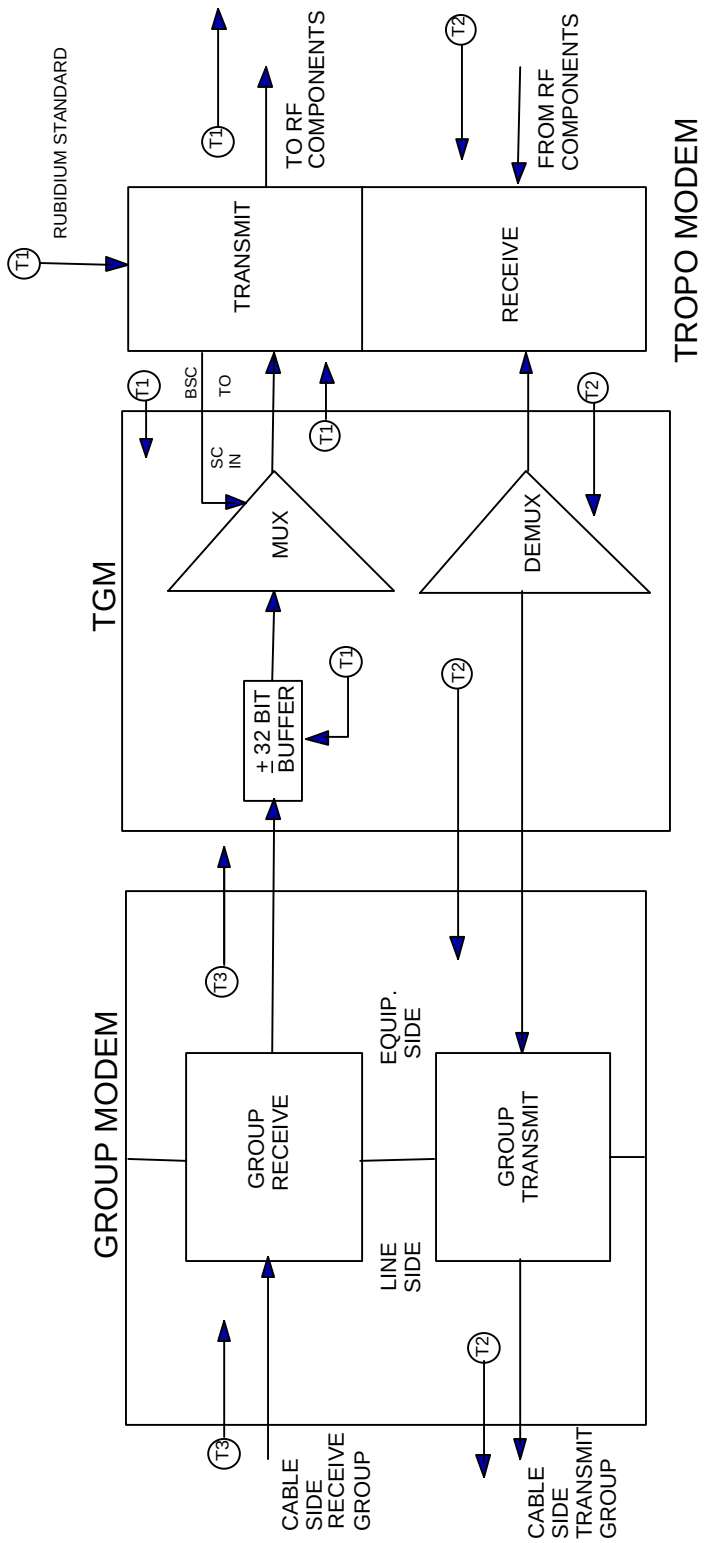

Figure A-C-33. AN/TRC-170 Master Station Timing

d. Mission Timing Mode. Figure A-C-34 depicts the timing flow when timing is slaved to the incoming mission traffic. In this case, timing T2 is recovered in the receive portion of the tropo modem from the received radio signal. Timing T2 is passed to the demultiplex (DEMUX) section of the TGM where it is used to time the transmitted low-speed groups. Timing T2 is also routed from the BLACK station clock output of the receive portion of the tropo modem to the TGM station clock input. This routing causes T2 to time the transmitted supergroup from the TGM to the tropo modem transmit section. The tropo modem uses T2 to time the data transmitted from the tropo modem. (The actual transmitted signal from the tropo modem is at a different rate than the input from the TGM. The tropo modem derives this mission rate from the input clock.) Timing on an incoming group on the cable side is recovered in a group modem. This timing is shown as T1 in the figure. Timing T1 clocks data into the $\pm$ 32-bit buffer at the TGM group input.

18. TD-1337 TSSP Timing. The TD-1337 is a synchronous multiplexer/ demultiplexer used in the Phase II GMF satellite terminals. It can be operated in three timing modes. These are selected by a database input. The modes are as follows:

a. External Standard. In the external standard mode a group input is selected and used to derive timing. The selected group input must have a data rate of at least 72 Kbps and be either balanced NRZ or conditioned diphase and have a timing stability of 1 in 10^6. Examples of usable external sources include any of the following: AN/TTC-39 series CS, AN/TRC-170 tropo terminal, AN/TSQ-111 CNCE, or AN/TSQ-146 multiplex (MUX) Van. Although all of the group inputs to the TD-1337 that meet the above conditions can be designated as external timing sources, it is recommended that only a conditioned diphase group input at port 1 be selected as the external timing source. In the event of a failure of this group, the TD-1337 will derive its timing from the last known frequency input from the external source.

b. Slave

(1) In the slave mode, the TD-1337 will slave to a remote TD-337 over the supergroup. The remote TD-1337 can be operated in either the master mode or the external standard mode. The TD-1337 slave mode uses a different implementation scheme from that used in

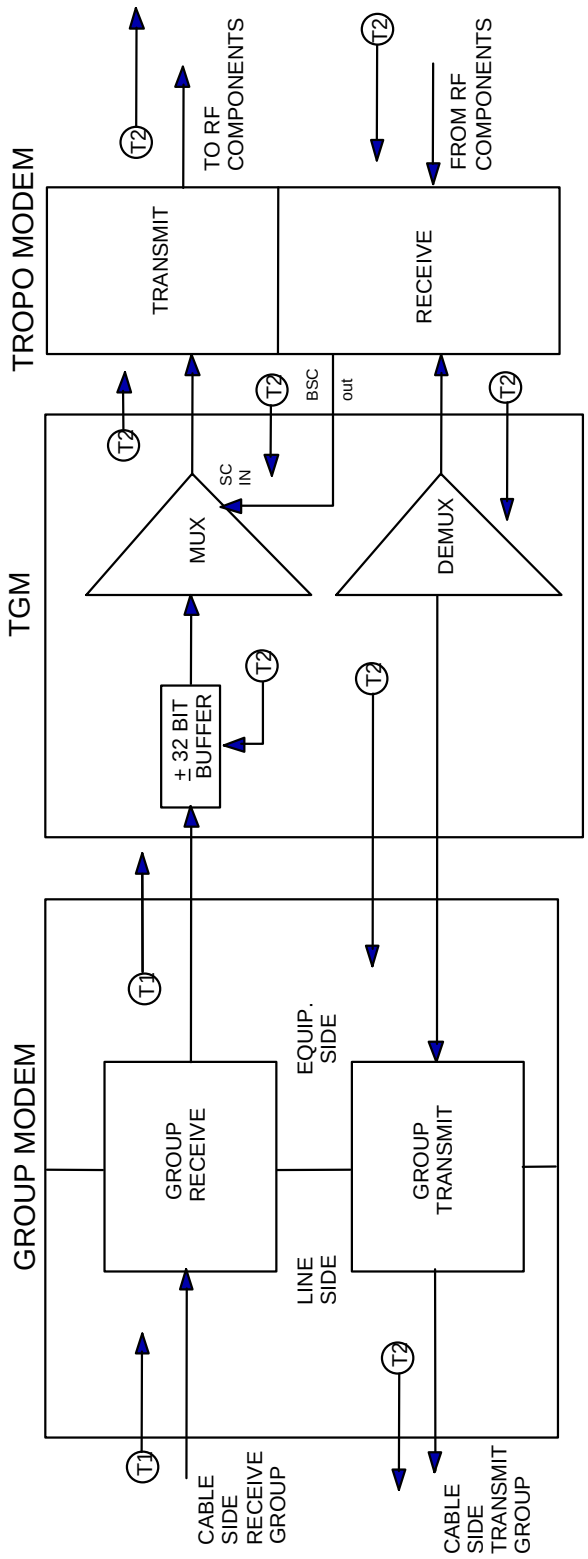

Figure A-C-34. AN/TRC-170 Mission Timing

TRI-TAC multiplexers. In the TD-1337, the VCXO is driven by the digital-to-analog (D/A) converter rather than the phase-lock-loop circuitry. In the slave mode, the slave TSSP microprocessor requests automatic frequency control (AFC) data from a master TSSP via the control telemetry (CT) portion of the supergroup overhead. The AFC data represent the relative fill of the output buffer in the master TSSP associated with the supergroup between the master and slave TSSPs.

(2) The microprocessor in the slave TSSP compares the received relative fill against the relative fill of its equivalent output buffer. Based on the results of the comparison, the microprocessor then applies an appropriate 8-bit word to the D/A converter. Upon receipt of the 8-bit word, the D/A converter applies an error voltage to the VCXO, which drives it to the desired output frequency. By this means, the VCXO in the slave TSSP tracks the VCXO in the master TSSP.

c. Master. In the master mode, the TD-1337 derives timing from an internal source. The master timing mode uses the output of the D/A converter to drive the VCXO. The TSSP microprocessor loads the D/A converter with a standard 8-bit word. This standard 8-bit word causes the D/A converter to apply the necessary voltage to the VCXO to drive it to its nominal midrange frequency output (9.216 MHz).

d. Transmit Group Timing. All transmitted earthside groups and the transmitted satellite-side supergroup are timed by the same source. Figures A-C-35 through A-C-37 show the timing flow for the three timing modes. Timing may be derived in one of three ways.

(1) External Standard. Timing is derived from one of the cable side group inputs. In Figure A-C-35, this timing is represented by T1. On the receive (DEMUX) side from the satellite, the received signal is demultiplexed into individual groups and then buffered. The buffer size can be varied with respect to the data rate of the group and the number of satellite hops. This buffer accommodates timing variations because of satellite motion as well as (doppler effect) variations because of clock differences between the received timing T2, T3, T4, or T5, and timing T1. Data are clocked out of the buffer by T1.

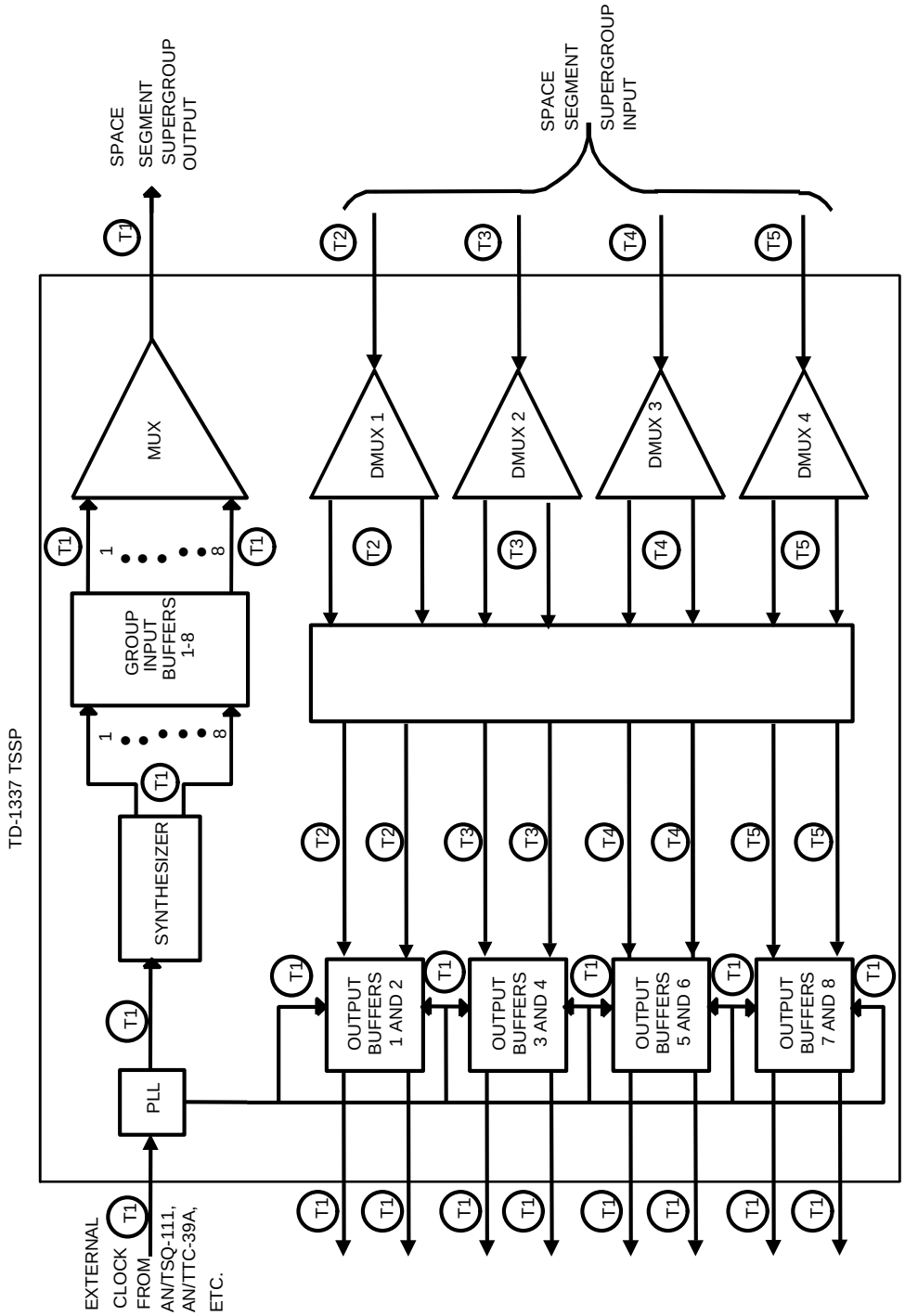

Figure A-C-35. TD-1337(V)1/(V)3 Timing Flow--External Timing Mode

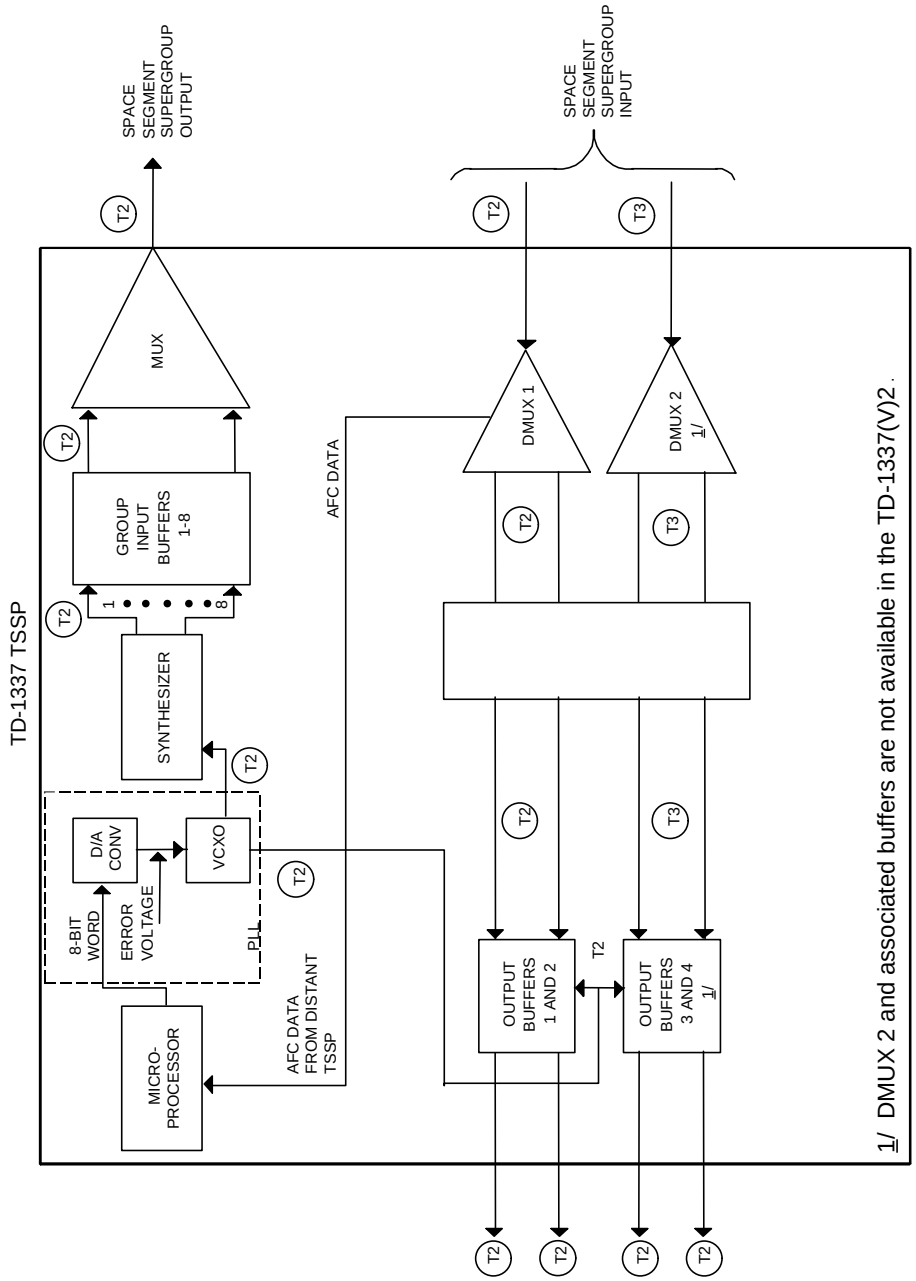

Figure A-C-36. TD-1337(V)2/(V)4 Timing Flow--Slave Timing Mode

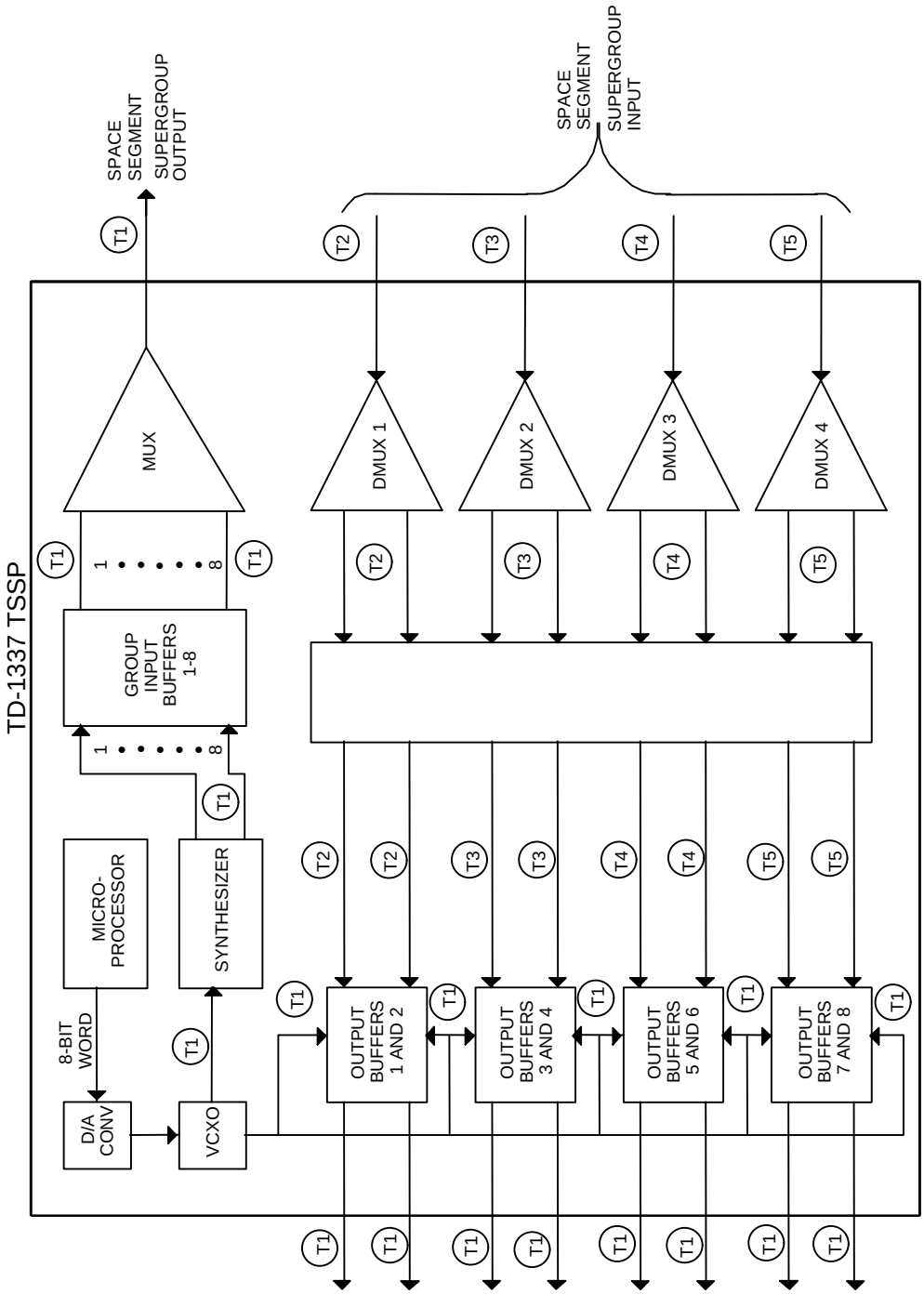

Figure A-C-37. TD-1337(V)1/(V)3 Timing Flow--Master Timing Mode

(2) Slave. Timing is derived from a TSSP located at a distant terminal. In the figure, the distant terminals are shown transmitting timing T2 and T3. If timing is derived from the signal received at DEMUX 1, then timing T2 becomes the timing source. (See Figure A-C-36.)

(3) Master. The internal master oscillator provides timing T1. (See Figure A-C-37.)

e. Differences Between TD-1337 Models. Figures A-C-35 through A-C-37 and previous discussion specifically cover the TS-1337(V)1 used in the AN/TSC-85B and the TD-1337(V)3 used in the AN/TSC-100A. The TD-1337(V)4 used in the AN/TSC-94A differs from the (V)1 and (V)3 models in the following ways:

(1) The (V)2 and (V)4 both have only one DEMUX instead of four.

(2) The (V)2 has only two group inputs and outputs instead of eight.

(3) The (V)4 has only four group inputs and outputs instead of eight.

19. AN/TRC-175 Radio Terminal Set Timing Flow. The AN/TRC-175 does not contain its own timing subsystem. Timing distribution for the shelter is supported by the C-10717 (OCU-II) and the patch panel. Figure A-C-38 depicts timing flow through the AN/TRC-175. In order to achieve the timing flow depicted in the drawing, the MGMs are operated in the station clock (SC) timing mode. In this mode the MGM requires an external clock. This clock, commonly referred to as the SC, is provided by and hard wired from the OCU-II. The OCU-II, which also requires a timing source for DVOW operation, is timed from the DVOW channel (1-5) originating in the assemblage providing the timing reference, T1. Note that DVOW channels are only accessible at the patch panel from group one of each of the group modems. A second OCU-II timing option is to select timing from a group transmitted from the assemblage providing the timing reference T1. This is accomplished by selecting the G timing mode on the OCU-II. If the OCU-II is to be timed from such a group, a patch from the selected GM BSC to the OCU-IN must be accomplished. Here again, only group one of each of the GMs has this timing output appearing on the patch panel. The group from which timing is to be recovered must be assigned to group one of any of the GMs within the assemblage. It should be noted that access to a DVOW

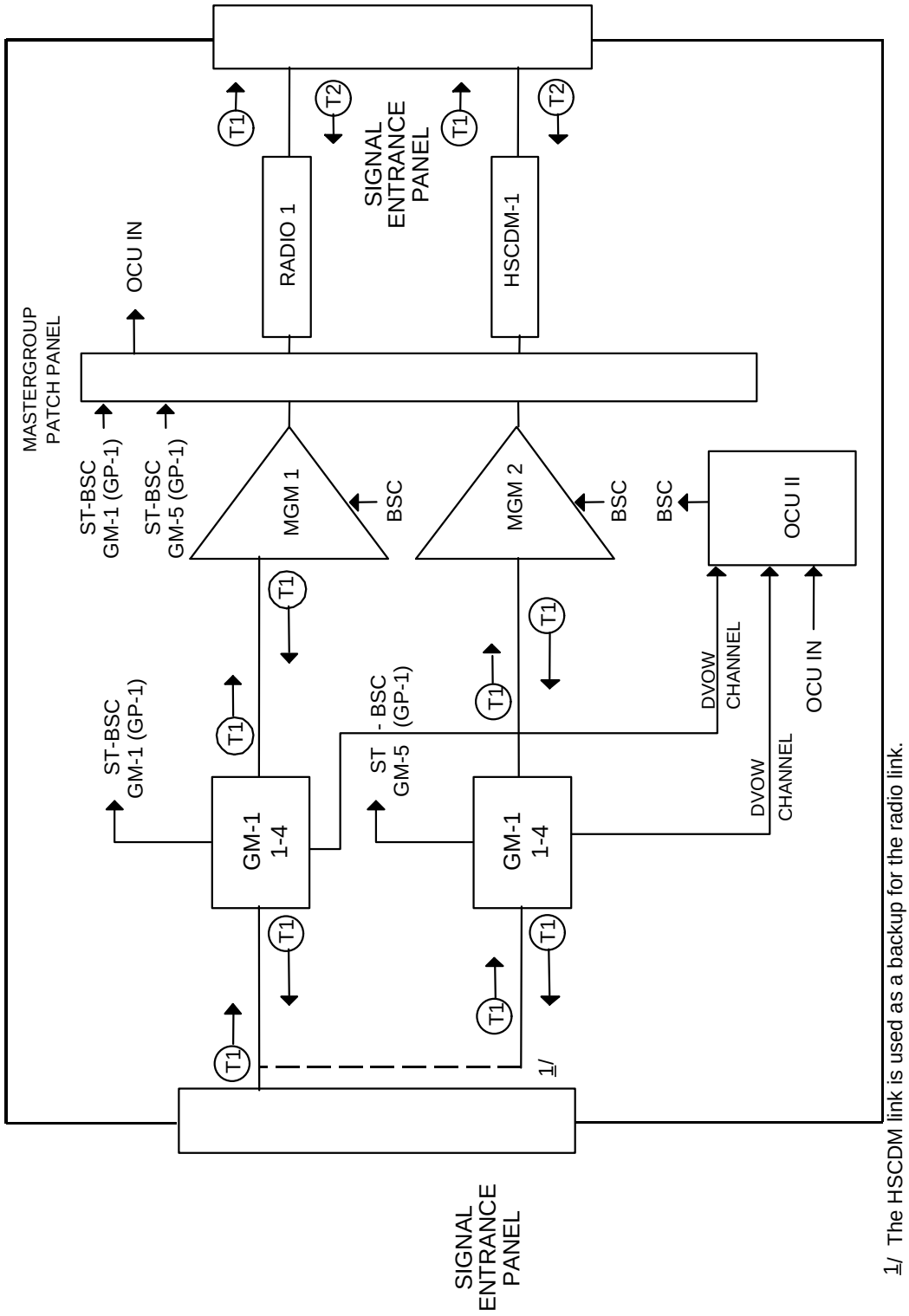

1/ The HSCDM link is used as a backup for the radio link.

Figure A-C-38. AN/TRC-175 Timing Flow

group is not provided within the AN/TRC-175. This precludes the use of the D (DVOW Group) option on the OCU-II Timing Select switch. The Master M timing option on the OCU-II is normally used only for troubleshooting of the assemblage. TM 11-5820-931-12 presents the methodology for such troubleshooting operations and includes patch panel requirements and timing options to accomplish these operations.

20. AN/TRC-138A Radio Repeater Set Timing Flow. The AN/TRC-138A does not contain its own timing subsystem. Timing distribution for the shelter is supported by the OCU-II and the patch panel. Figure A-C-39 depicts timing signal flow through the AN/TRC-138A. The MGM requires an independent external clock only when not being operated in the loopback timing mode. When required, this BSC is hardwired from and provided by the OCU-II. To achieve the timing flow depicted in the figure the MGM could be operated in the loopback mode. With the MGM in loopback mode, timing for the DVOW circuits still needs to be selected for the OCU-II. This timing selection for the OCU-II does not impact on the MGM since the BSC input to the MGM is not being used. A second set of timing options to satisfy the timing flow is the use of the station clock mode of timing for the MGM and the selection for the OCU-II of the M or the D timing mode. The M DVOW and the multiplexed DVOW originate at the bottom of the hill (BOH) and are referenced to the BOH atomic standard. TM 11-5820-773-34 presents the methodology for troubleshooting operations and includes patch panel requirements and timing options to accomplish timing during these operations.

21. AN/TRC-174 Radio Repeater Set Timing Flow. The AN/TRC-174 does not contain its own timing subsystem. Timing distribution for the shelter is supported by the OCU-I and the patch panel. Figure A-C-40 depicts timing signal flow through the AN/TRC-174. During normal mission operation only the OCU-I requires a selectable timing source. This timing source is required for DVOW functions within the OCU-I. In this example timing for the OCU-I is derived by selecting a timing select switch position of 1-6. The position selected equates to an incoming DVOW channel, referenced to the nodal atomic timing standard, over either the radio modem or the group modem. The patch panel also provides the OCU-I Group 1 and Group 2 timing outputs (GP TIM 1 and GP TIM 2) from the OCU-I which may be used as required.
TM 11-5820-864-34 presents the methodology for troubleshooting operations and includes patch panel requirements and timing options to accomplish these operations.

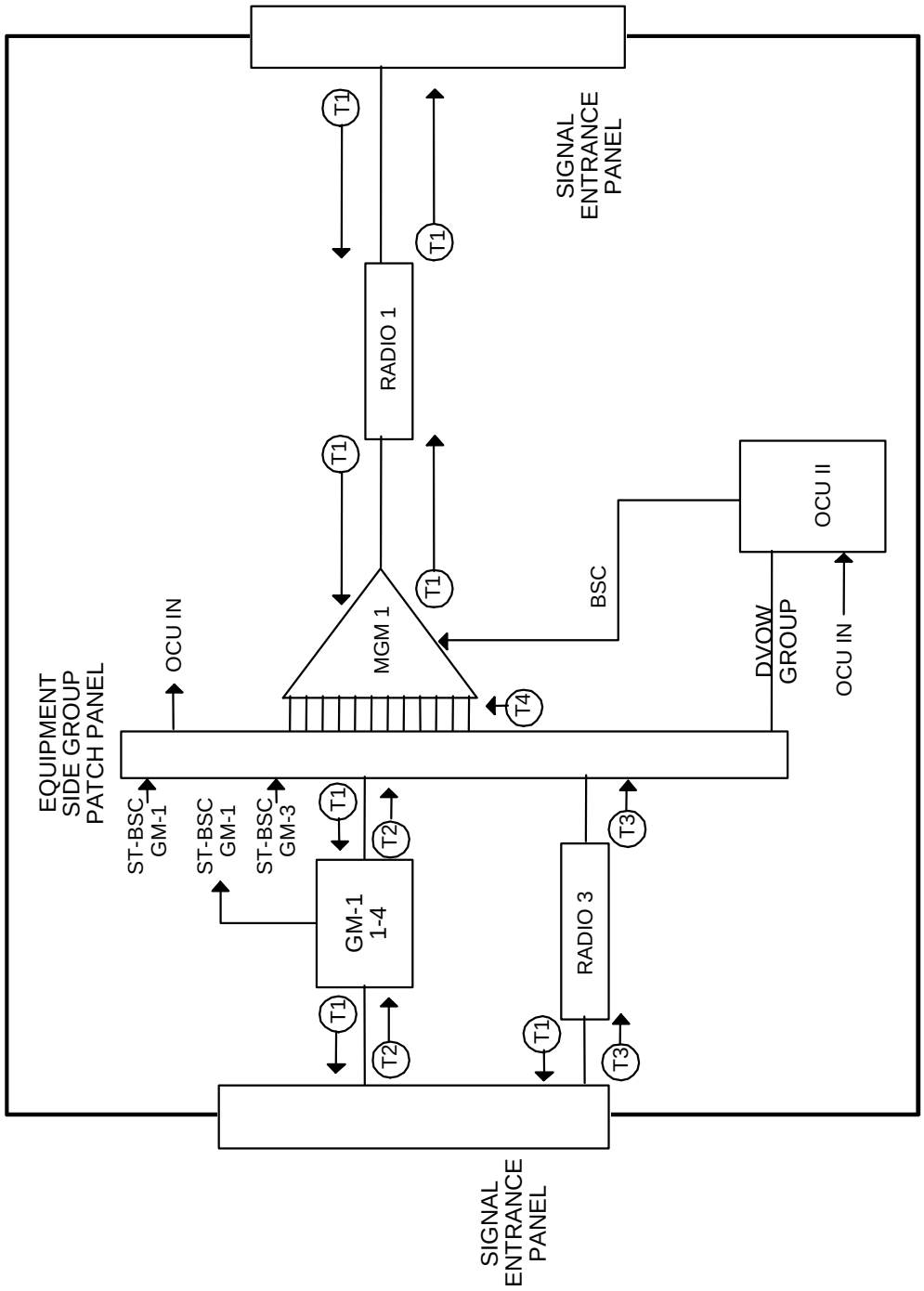

Figure A-C-39. AN/TRC-138A Timing Flow

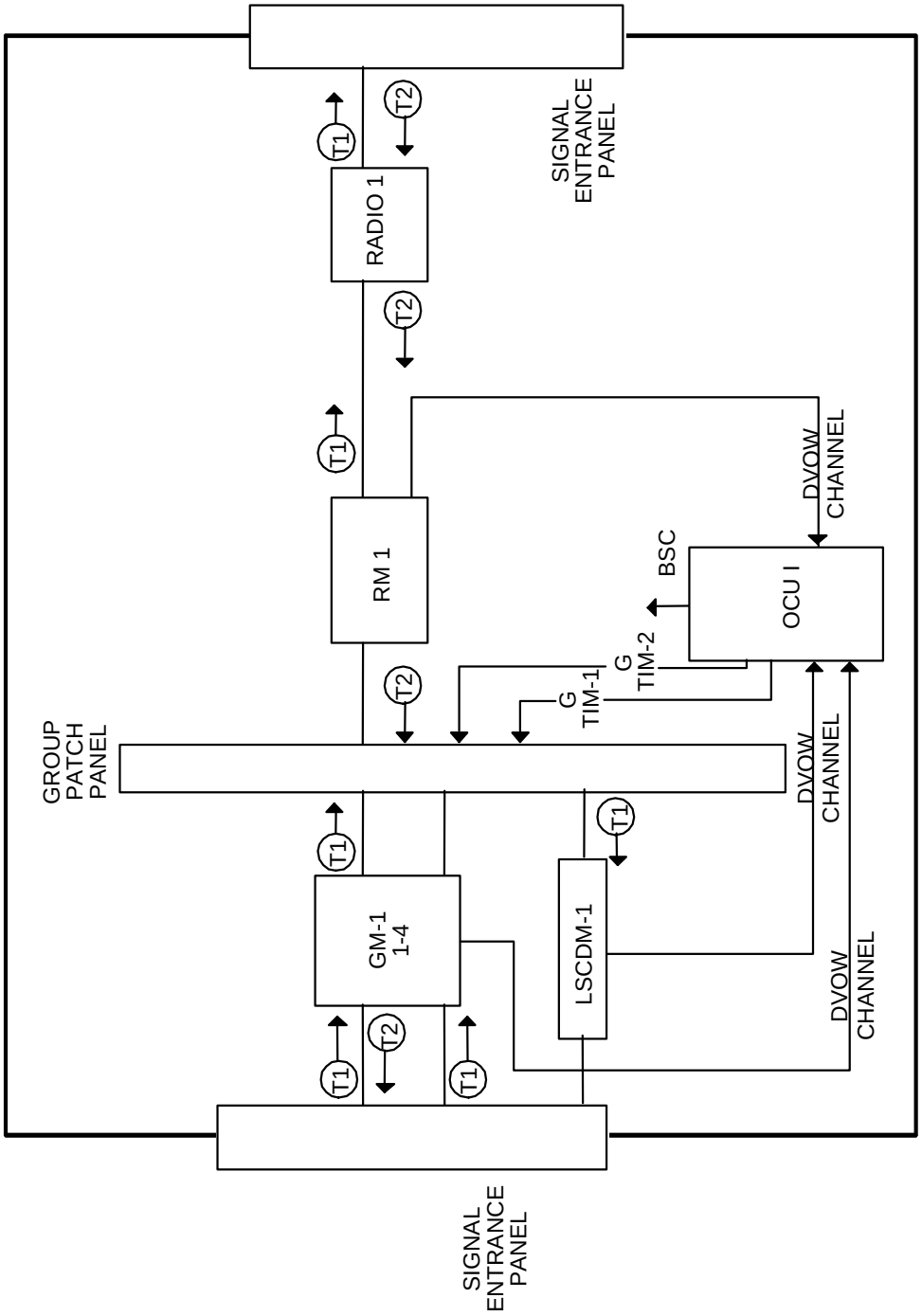

Figure A-C-40. AN/TRC-174 Timing Flow

22. AN/TRC-173 Radio Terminal Set Timing Flow. The AN/TRC-173 does not contain its own timing subsystem. Timing distribution for the shelter is supported by the OCU-I and the patch panel. Figure A-C-41 depicts typical timing flow through the AN/TRC-173 and one of its four associated RMCs. Unlike the AN/TRC-138A, AN/TRC-174, and the AN/TRC-175, the AN/TRC-173 contains a TED, KG-94. The TED has only one timing mode and requires an external timing source, a BSC. This BSC can be provided by the OCU via the TS patch from the RM patch or from the Low Speed Cable Driver Modem (LSCDM) patch. All patch appearances are located on the Equipment Side Group Patch Panel associated with equipment strings one and two. The TS patch appearance associated with equipment string one and two is the OCU-I Group 1 and Group 2 clock outputs, respectively. In order to use the TS output(s) in an operational scenario, the OCU timing must be referenced to an atomic standard via a DVOW channel. In addition to the TEDs, the OCU-I, the TGMs, and the associated RMCs require the selection of timing modes. Remote multiplexer combiners are normally timed in the loopback mode since no reliable station clock (RSC) from the TED is hardwired to the TGM SC mode. The TGM could also be operated in the loopback mode. Timing for the OCU-I should be obtained from the "1-6" DVOW channel input, depending upon which DVOW is referenced to the node atomic standard. The patch panel appearances labeled GM-1 BSC 1, 2, 3, and 4 and GM-2 BSC 1, 2, 3, and 4 present the timing signals from the specified group modems. Note that no OCU-I Group 1 timing input was brought out to the patch panel. Therefore, timing select mode "G" on the OCU-I provides no useful function. TM 11-5820-1090-34 presents the methodology for trouble shooting operations and includes patch panel requirements and timing options to accomplish these operations.

23. System Timing. Absolute rules for timing are difficult to establish because of the wide variety of configurations that may be encountered. However, it is possible to establish general guidelines that fit particular situations. If the system is very large, the planner may decide to use different timing arrangements in different parts of the network. This guideline is permissible and is likely to be the best choice. Guidelines are given in the following subparagraphs:

a. System Timing for Nodes Equipped with the AN/TSQ-111 (CNCE). When CNCEs are available at a node, the CNCE will be designated as the master timing source. With the exception of the AN/TTC-39 series CS, all other equipment at the node will slave its timing to the CNCE.

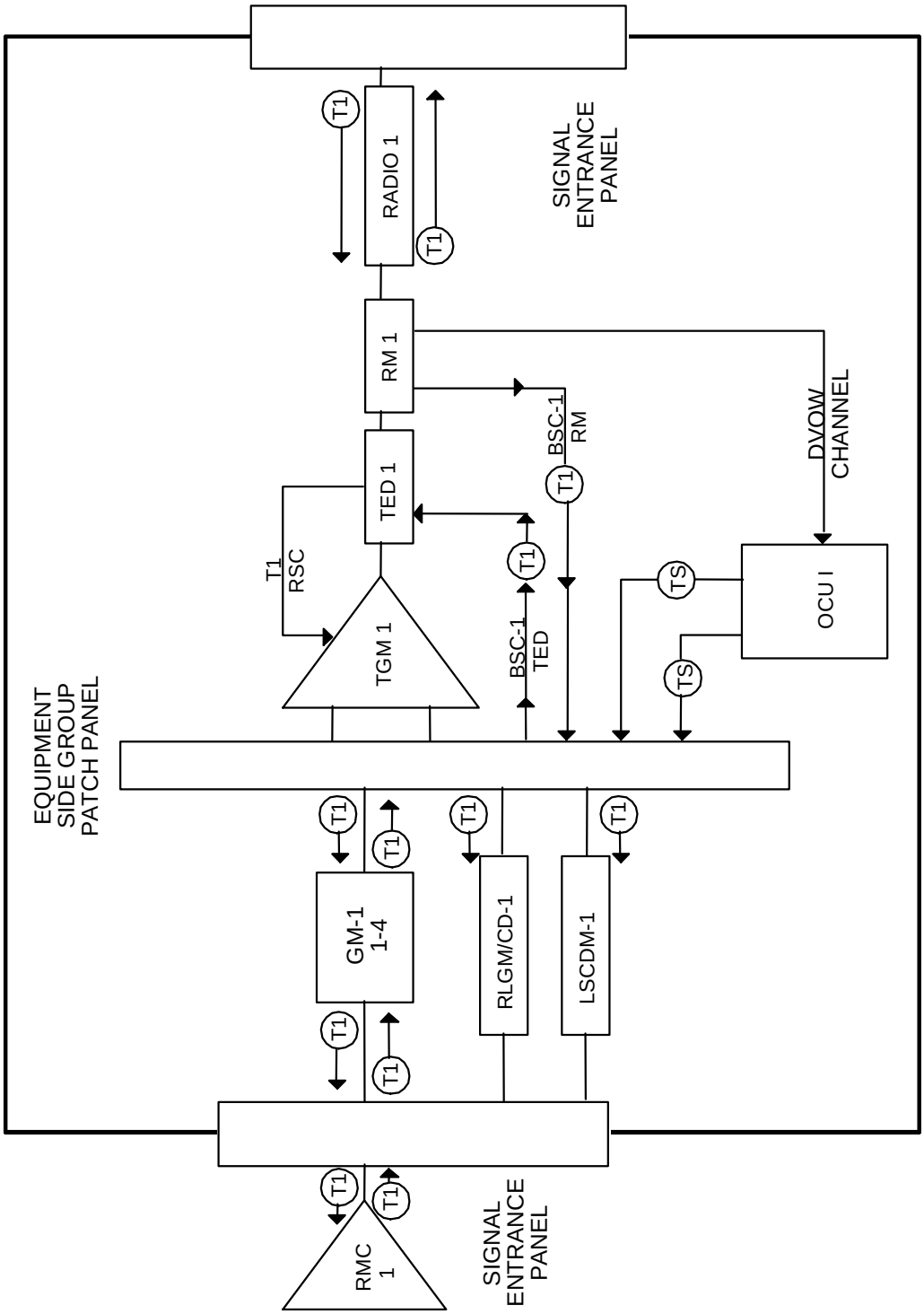

Figure A-C-41. AN/TRC-173 Timing Flow

It is recommended that collocated AN/TTC-39 series CSs be operated in a MASTER/MASTER timing mode with the CNCE. This configuration would allow the RD STD in the AN/TTC-39 series CS to automatically become the master timing source if the CNCE CBFS failed.

b. System Timing for Nodes with AN/TTC-39 series CS Without a Collocated CNCE. If an AN/TTC-39 series CS is deployed without a CNCE, the AN/TTC-39 series CS will be designated as the master timing source for the node. All other equipment at the node will slave its timing to the circuit switch.

24. Planning the Network Timing System. When developing network timing plans, the planner must be aware of the timing capabilities of the different items of equipment and how they can be interconnected in order to determine the optimum timing configuration for the network. The following general guidelines are recommended for use when developing a network timing plan:

a. Keep the network timing system as simple as possible. Redundancy should be used where possible to assure system reliability.

b. Plan the timing system to minimize the impact of critical equipment losses and failures (CNCE, AN/TTC-39A(V)1, etc.) Use the independent clock approach to the maximum extent possible.

d. Diagram the network for which the timing plan is being developed and list the equipment at each node requiring timing.

e. Determine the master timing source for each node in the network. Select the most accurate source as the master source. Note that the master source does not necessarily have to be located at the node.

(1) For nodes that have a CNCE and an AN/TTC-39 series CS, operate both the CNCE and switch in the Master timing mode.

(2) For nodes having only an AN/TTC-39 series CS (no CNCE), use the switch as the Master timing source for the node. Note that the collocated AN/TTC-39 series CS should be operated in a Master timing mode with the CNCE.

(3) For nodes with only an AN/TSQ-146 (must have a DCPG with rubidium standard installed), use the AN/TSQ-146 as the master timing source.

(4) For nodes without a CNCE, AN/TTC-39 series CS or rubidium standard equipped AN/TSQ-146, timing should be derived from a distant node equipped with an acceptable master source.

f. Determine an alternate master timing source, if possible, for each node in the network. Select the next most accurate source to be the alternate source. The impact of implementing the alternate timing source on the timing configurations of other equipment at the node should be minimized. The alternate source does not have to be located at the node.

g. Buffering must be provided in networks with more than one master timing source. Table A-C-4 provides a list of equipment items and their associated buffer sizes. The timing plan should cause timing differences to appear across the largest buffers in the network.

h. Standard timing configurations should be used for like items of equipment to the maximum extent possible.

i. As previously stated, only the most accurate source available should be used as a master timing source. Table A-C-5 provides the initial accuracy of the clocks in the different items of equipment. This table shows the accuracy after calibration, which is not necessarily the accuracy that will be found in equipment clocks in the field. This fact is especially true for AN/TTC-39 series CS and GMF equipment containing the TD-1337 TSSP. There is currently no field procedure to calibrate these oscillators. Thus the actual accuracy of these oscillators may be somewhat lower than shown in the table.

j. To the maximum extent possible, the planner should try to use a standard timing mode configuration for all like items of equipment in the network. For example: all AN/TRC-170s configured for group timing; all AN/TTC-39s configured for slave timing; all AN/TSQ-111s configured for timing plan for a node. A separate worksheet should be completed for each node in the network and copy provided to the nodal manager. A complete set of worksheets (one for each node in the network) represents master timing; etc. The planner must also be aware that it will not always be possible to have every piece of like equipment in the same timing configuration.

k. Figure A-C-42 illustrates the Nodal Timing Plan Worksheet. As its name implies, this worksheet is used to develop and implement the network timing plan and should be provided to the network SYSCON.

NODAL TIMING PLAN WORKSHEET

Part 1 Nodal Timing		
Master Timing Source _____	Alternate Timing Source _____	Alternate Timing Source Facility/Origin _____

Part II Equipment Timing					
Equipment Type	Master Timing Source	Timing Mode for Operation with Master Source	Alternate Timing Switch	Timing Mode for Operation with Alternate Source	Remarks
		LOOPBACK			
NODE _____	LOCATION _____	DATE _____	REV NO _____	PREPARED BY _____	CHECKED BY _____

Pg. of

Figure A-C-42. Nodal Timing Plan Worksheet

Table A-C-4. TRI-TAC/GMF Equipment Buffering Capabilities

Equipment	Buffer Size (bits)
AN/TSQ-111	± 160
AN/TTC-39 Series	± 256 1/
AN/TTC-42	± 256, ± 512 2/
SB-3865	± 256, ± 512 3/
TD-1236	± 8
TD-1235	± 8
TD-1234	± 8
TD-1233	± 8
TD-1337	Buffer length varies with the data rate of the group (maximum of 16,384 bits)

1/ These are the buffer sizes when the switch is configured for 32 Kbps VDR operation. For 16 Kbps VDR operation, the buffer sizes are ± 64 and ± 128 bits respectively.
2/ 256 bits for Modems 1, 3, 4, 6, and 7 and 512 bits for Modems 2 and 5.
3/ 256 bits for Modems 1 and 3 and 512 bits for Modems 2 and 5.

Table A-C-5. Initial Timing Source Accuracy

Equipment	Timing Source Accuracy
AN/TSQ-111	$1x10^{-12}$
AN/TTC-39 Series	$1x10^{-11}$
AN/TSQ-146 1/	$1x10^{-11}$
AN/TRC-170	$1x10^{-11}$
AN/TTC-42	$1x10^{-9}$
SB-3865	$1x10^{-8}$
TD-1337	1.0852×10^{-7}
C-10716	$1x10^{-5}$

1/ Accuracy applies only if the rubidium standard is installed.

The nodal timing worksheet is divided into two parts. Part I concerns itself with the master and alternate timing sources for the node. Part II addresses individual equipment timing at the node. Subparagraphs 24k(1) and 24k(2) below provide information for use in completing the worksheet.

(1) Part I Nodal Timing. This section is used to define the master and alternate master timing sources for the node.

(a) Master Timing Source. Enter the facility (CNCE, AN/TTC-39 series CS, etc.) or other timing source (DTG from a distant node) that will be the master timing source for the node.

(b) Alternate Timing Source. Enter the facility or other timing source that will be used as the alternate timing source for the node if the nodal master source fails or becomes impaired; i.e., loses its reference standard (CBFS or RB STD).

(c) Alternate Timing Source Facility/Origin. Enter the facility providing the alternate timing source and the node at which it is located. This box would be used only if the alternate timing source is a DTG from another node.

(2) Part II Equipment Timing. Part II is used to define how each major equipment item at the node is to be timed.

(a) Equipment Type. Enter the equipment nomenclature; AN/TSQ-111, AN/TTC-39 series CS, AN/TRC-170, etc.

(b) Master Timing Source. Enter the timing source from which the equipment will derive its timing. Example entries are: DTG from AN/TSQ-111, DTG from AN/TTC-39 series CS, etc.

(c) Timing Mode for Operation With Master Source. Enter the timing configuration that the equipment will be operated in with the master timing source. Table A-C-6 provides a list of TRI-TAC/GMF equipment and the timing modes and configurations in which each can be operated. Example entries are: GROUP for an AN/TRC-170, EXTERNAL STANDARD for a GMF terminal, etc.

(d) Alternate Timing Source. Enter the alternate timing source from which the equipment will derive its timing if the nodal master timing source fails completely.

(e) Timing Mode for Operation With Alternate Timing Source. Enter the timing configuration that the equipment will be operated in with the alternate timing source. (See Table A-C-6.)

25. Tactical Network Timing Plan Example. Based on information provided in the preceding paragraphs, planning for network timing can be accomplished. This paragraph provides an example of a timing plan that could be used in a representative TRI-TAC/GMF network. Figure A-C-43 depicts a nine-node tactical network. Each node is numbered and the equipment located at the node is enclosed by a solid line. For the purposes of this example, the CNCEs and AN/TTC-39A(V)1 CSs in the network were used as the master timing sources for the rest of the network. It should be noted that this is not the only timing configuration that will work. For example, nodes without a CNCE or AN/TTC-39A(V)1 CS, but having an AN/TSQ-146 Multiplex van equipped with rubidium standard, could be operated in the MASTER/MASTER timing mode with CNCE/AN/TTC-39 series CS equipped nodes.

a. Figure A-C-44 depicts timing flow through an Air Force communications system. In this example, both AN/TSQ-111s are being operated in the master timing mode. Each AN/TRC-170 is being operated in the group timing mode, which produces transmit timing referenced to the timing received on the cable side of the group modem. This use of the group timing mode assumes the processing of multiple groups and the employment of the dejitterizer in the transmit patch of group one. If a single group were to be processed, the tropo modem would be operated in the mission timing mode. Also, the BSC RO would NOT be patched to the baseband.

b. The method of system timing used was selected primarily because the timing generator in the AN/TSQ-111 is the most precise in the system and, secondly, because this selection is the simplest method to implement. Nodal Timing Plan Worksheets for the nodes shown in Figure A-C-43 are discussed in detail in paragraph 26 below.

c. Figure A-C-45 depicts timing flow through an Army TRI-TAC communications system. All timing within the system is referenced to the rubidium standard contained within the AN/TTC-39 series CS. This timing plan was selected because the rubidium standard is the most stable timing source in the system. Timing for the OCU-II is referenced to the AN/TTC-39 series CS and is derived from group 1, which is received from AN/TRC-175, Unit 2. This option was again selected for simplicity. An orderwire channel has to be patched from one of the GMs

Table A-C-6. Equipment Timing Considerations

Equipment	Timing Configuration	Explanation
AN/TSQ-111	Master (Atomic Standard) Slave (Group Input)	Timing derived internal cesium beam frequency standard (CBFS). Timing is derived from receive DTG
AN/TTC-39 Series	Master (Atomic Standard) Slave	Timing derived from internal rubidium standard. Timing derived from receive DTG.
AN/TTC-42	Master Slave	CS derives timing from internal crystal oscillator. CS derives its timing from a DTG.
SB-3865	Master Slave	CS derives timing from internal timing oscillator. CS derives timing from a DTG.
AN/TRC-170	Master Group Mission	Timing derived from internal rubidium standard. Timing derived from receive cable side DTG. Timing derived from mission bit stream received from distant TROPO.
AN/TSQ-146	Master (Atomic Standard) Slave	Timing derived from internal rubidium standard. Timing derived from a receive DTG.
GMF/TD-1337 (TSSP)	Master External Standard Slave	Timing derived from internal crystal oscillator. Timing derived from a receive cable side DTG. Timing derived from a mission bit stream received from distant TSSP.
TD-1234	Master Loopback Station	Timing derived from internal oscillator. Timing derived from high side receive DTG. Maintenance testing purposes only.
TD-1233	Master Loopback	Timing derived from internal oscillator. Timing derived from receive DTG.

Table A-C-6. (Cont d)

Equipment	Timing Configuration	Explanation
TD-1235	Station Clock Loopback	Timing derived from external source such as OCU. Station clock is provided at the group rate. Timing derived from the received group.
TD-1236	Station Clock Loopback	Timing is derived from external source such as OCU. Station clock is provided at the supergroup rate. Timing derived from received supergroup.
TD-1237	Station Clock Loopback	Timing derived from external source such as OCU. Station clock provided at 16 or 32 Kbps. Timing derived from a group.
C-10716	Group "G" "1" through "6" Master "M"	Timing derived from group. Timing derived from DVOW channel 1 through 6 respectively. Timing derived from internal VCXO.

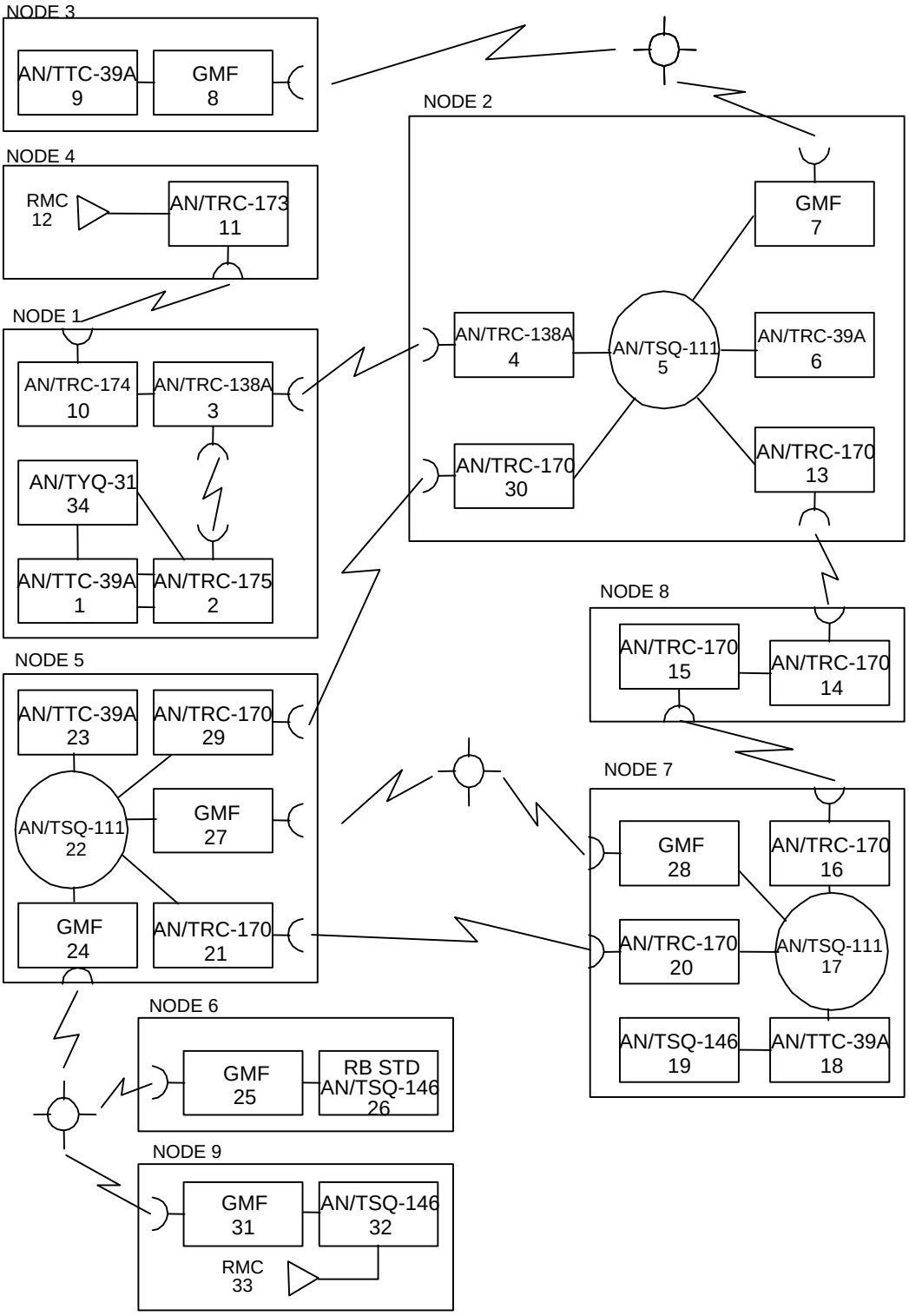

Figure A-C-43. Network Timing Plan Example

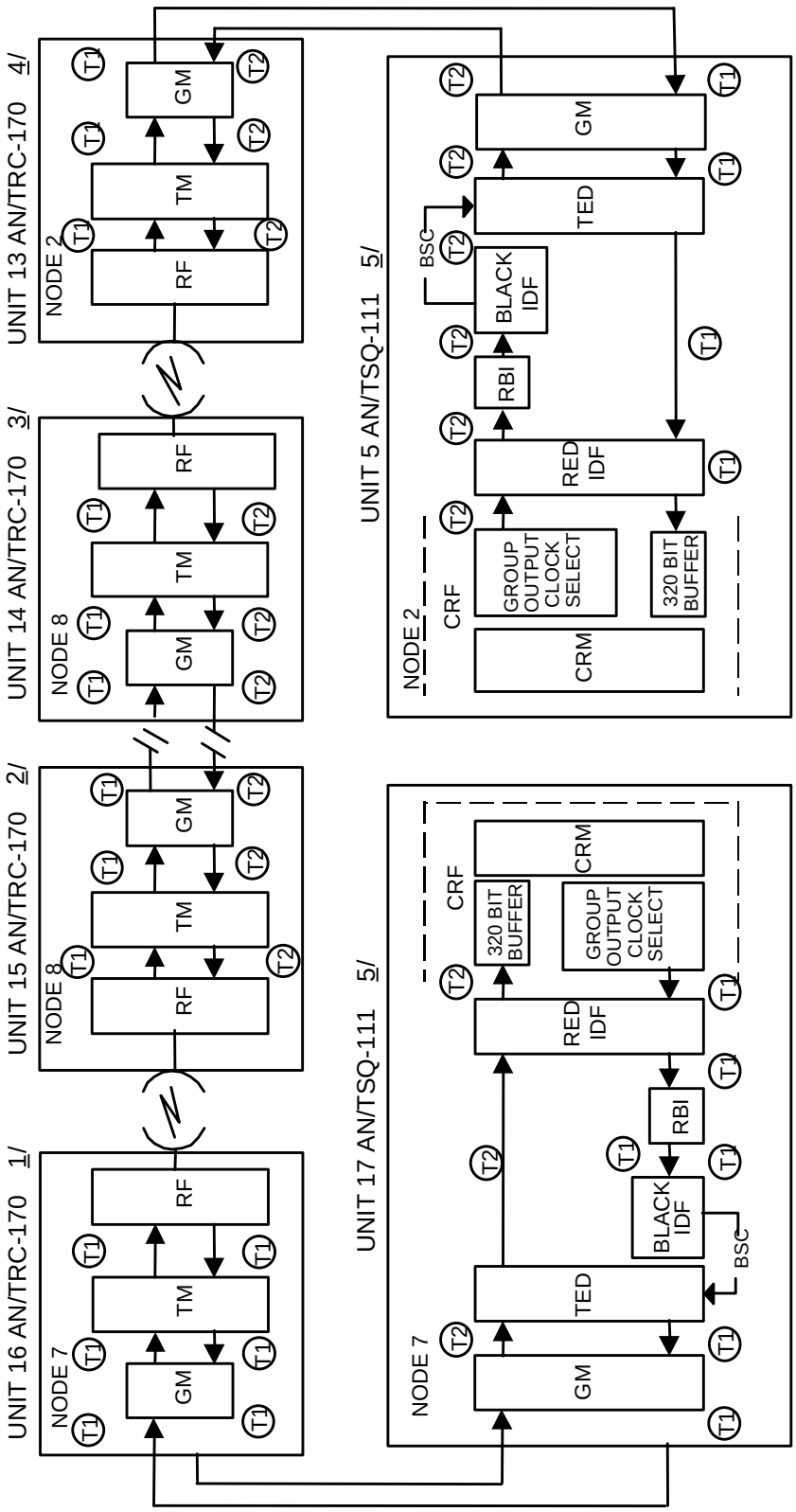

1/ Group timing mode T1 derived from digital group input from unit 17.
2/ Group timing mode T2 derived from digital group input from unit 14.
3/ Group timing mode T1 derived from digital group input from unit 15.
4/ Group timing mode T1 derived from digital group input from unit 5.
5/ Master timing mode.

Figure A-C-44. CNCE-TROPO-CNCE Link Timing Flow

interfacing with the AN/TRC-174 to enable voice orderwire signal flow, so the same channel or patch is used to provide the OCU a timing reference. Nodal Timing Plan Worksheets for the nodes shown in Figure A-C-45 are discussed in detail in paragraph 26 below.

d. Figure A-C-46 depicts timing flow through a complex system containing GMF terminals, an AN/TSQ-111 and an AN/TTC-39 series CS. In this example both the CNCE and the circuit switch are operated in the master timing mode. The GMF terminals are operated in the external standard mode. The difference between T1 and T2 in each of the GMF terminals is accommodated in the TSSP demultiplex buffers. The size of these buffers is determined by the rate of the TSSP aggregate group. Since group one must be the largest group, this is the group that should be selected to provide timing. The OCU-II within the AN/TTC-39 series CS is timed via the DVOW channel received from the Unit #8 GMF terminal. Not shown, due to their not requiring external clock, are the DVOWs associated with the CNCE and GMF terminals. Although simplicity is one reason to select this method of timing, a more important factor is the size of the buffers found in the network. The buffers associated with the TSSPs can be up to $\pm$ 8 kilobits in size while the buffers associated with the CNCE and the AN/TTC-39 series CS are $\pm$ 160 bits and $\pm$ 256 bits respectively. The Nodal Timing Plan worksheets for the nodes presented in Figure A-C-46 are discussed in detail in paragraph 26 below.

e. In each of the above cases, the timing can be traced back to either a CNCE or an AN/TTC-39 series CS. Using the CNCEs and/or AN/TTC-39 series CSs as the network master timing source results in some major benefits.

(1) Timing is referenced to extremely accurate sources.

(2) Timing system planning is simplified. Timing configurations for like items of equipment can, in general, be standardized.

(3) Reconfiguration of the network timing is simplified. In the event of equipment failure at a specific node, there would be no need to replan the entire timing system. Additionally, reconfiguring timing modes of individual equipment items at the affected node would be minimized.

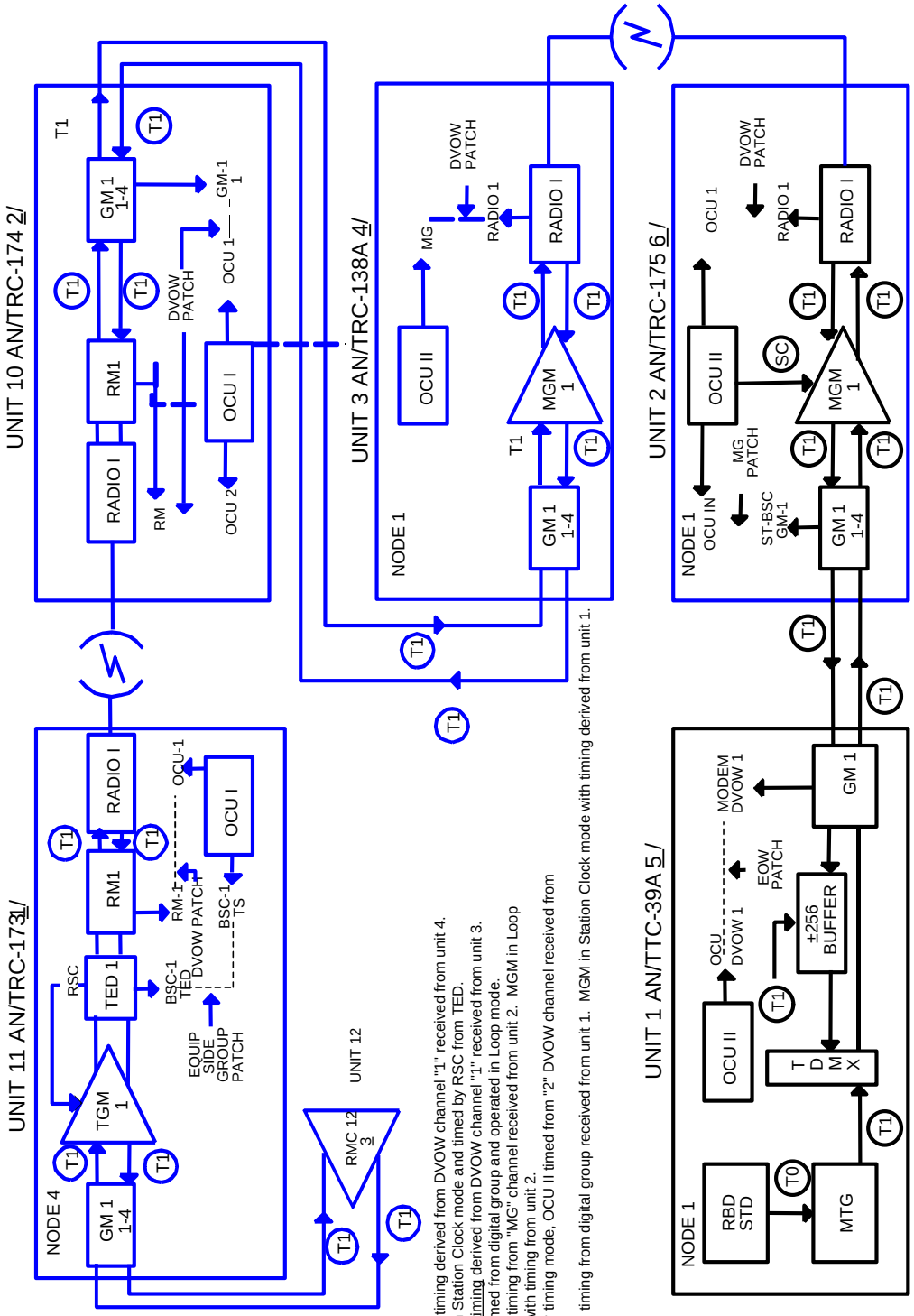

1 / OCU I timing derived from DVOW channel "1" received from unit 4.
TGM in Station Clock mode and timed by RSC from TED.
2/ OCU I timing derived from DVOW channel "1" received from unit 3.
3/ RMC timed from digital group and operated in Loop mode.
4 / OCU II timing from "MG" channel received from unit 2. MGM in Loop mode with timing from unit 2.
5 / Master timing mode, OCU II timed from "2" DVOW channel received from unit 2.
6 / OCU II timing from digital group received from unit 1. MGM in Station Clock mode with timing derived from unit 1.

Figure A-C-45. AN/TTC-39A-Radio Assemblage-RMC Link Timing Flow

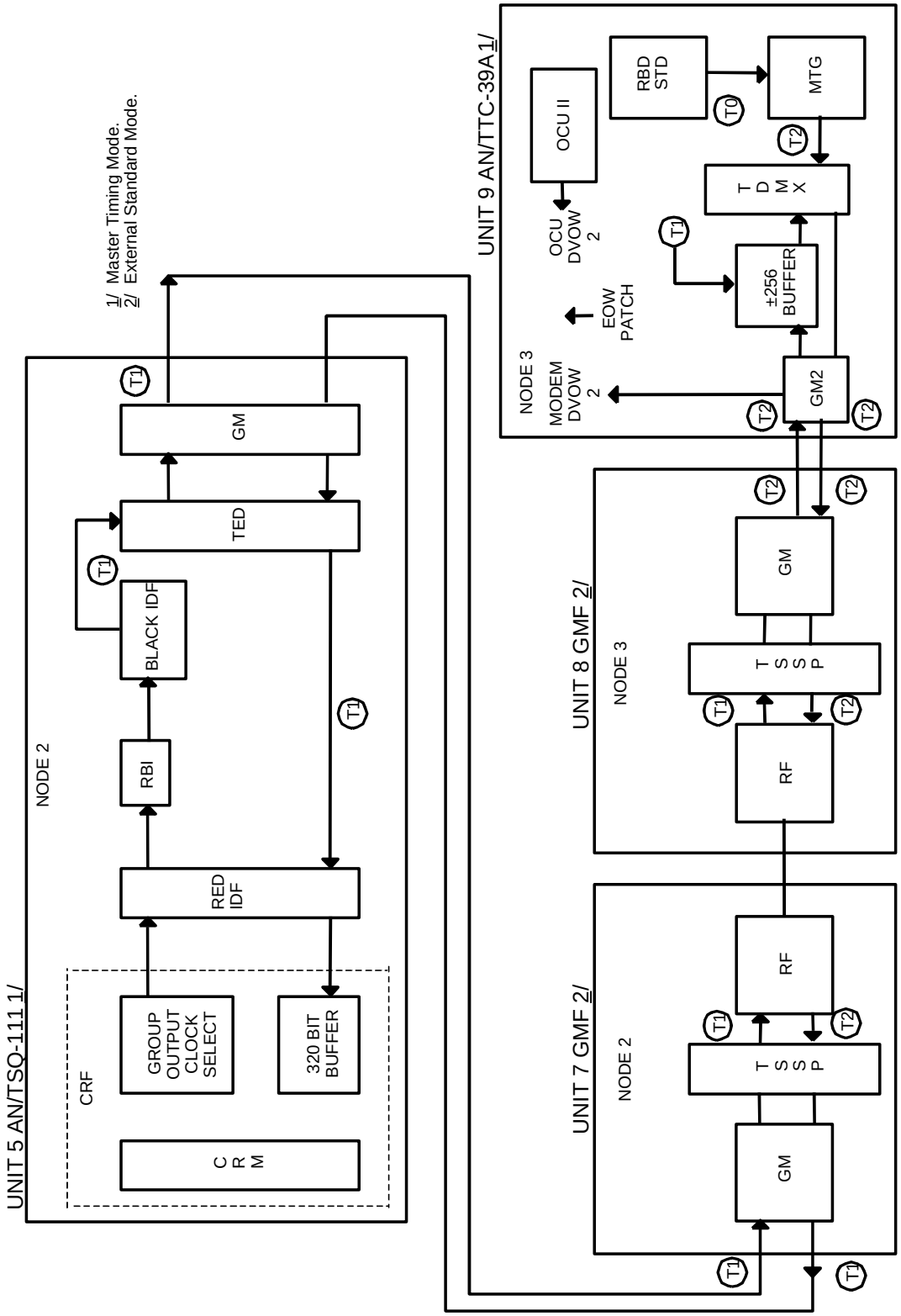

Figure A-C-46. CNCE-GMF-AN/TTC-39A Link Timing Flow

f. Network Diagram. The planner may find it useful to diagram the network before developing the timing plan. The advantage of completing a network diagram is that it provides the planner with a pictorial quick reference of the major elements of the network that require timing. Figure A-C-43 represents an example of a network diagram.

26. Nodal Timing Plan. Once the network diagram has been completed, the planner can proceed to develop the timing plan for each node. To do this, the planner must know what equipment is located at each node in the network. In this example, the decision was made to show all major equipment items located at each node on the network diagram. (See Figure A-C-43.) Regardless of the method used, once the nodal equipment complement has been determined, a nodal timing system worksheet must be completed for each node in the network (see Figure A-C-42). The completed worksheet represents the timing plan for the node. Figures A-C-47 through A-C-55 show the timing plan for each node in the example network. A brief discussion on how the timing for each node was derived is provided in the following subparagraphs.

a. Node #1. Figure A-C-47 depicts the timing plan worksheet for Node 1. The master timing source for the node is the AN/TTC-39A(V)1 CS since its rubidium source is the most accurate available. If the RB STD within the CS fails, the alternate nodal timing source listed in Part #1 of the worksheet would be implemented. In this case the AN/TTC-39 series CS would be slaved through the AN/TRC-175 #2 and AN/TRC-138As #3 and #4 to a DTG received from the Node 2 AN/TSQ-111. In order to make this change in timing sources, the MGM within the AN/TRC-175 must be changed from Station to Loop. Also, the MGM within the AN/TRC-138A #3 must be AN/TRC-138A #4. The change to the OCU-II allows the provision of station clock to the MGM. The information presented in Figure A-C-47 under the Alternate Timing Source and Timing Mode Operation with Alternate Source columns for the AN/TRC-38A and the AN/TRC-175 reflect the required timing configuration of this equipment in order to enable AN/TTC-39 series CS #1 to operate in the Slave timing mode. The other equipment at the node would remain slaved to the CS. If the CS became totally disabled, the alternate source listed in Part 1 could still be implemented. Additional actions would be required to enable some subscribers at Node 1 and all the subscribers at Node 4 to continue to be served by the network.

NODAL TIMING PLAN WORKSHEET

Part 1 Nodal Timing		
Master Timing Source AN/TTC-39A(V)1	Alternate Timing Source DTG From AN/TRC-175 2	Alternate Timing Source Facility/Origin AN/TSQ-111 5/NODE 2

Part II Equipment Timing					
Equipment Type	Master	Timing Mode for	Alternate	Timing Mode for	Remarks
AN/TTC-39A(V)1	RB STD	MASTER	DTG FROM	SLAVE	
AN/TTC-39A(V)1	DVOW CH From TRC-175 2	1			
AN/TRC-175 2	DTG 1 From	STATION	MASTER GROUP	LOOP	
AN/TRC-175	DTG 1 From	G			
AN/TRC-138A 3	MASTER GROUP	LOOP	DVOW CH FROM	STATION	
AN/TRC-138A 3	DVOW CH FROM	MG	DVOW CH FROM	DVOW CH 1-5	
AN/TRC-174 10	DVOW CH 1 FROM	1			
AN/TYQ-31 34	DTG 1 FROM	LOOP			
AN/TYQ-31	DVOW GROUP	D			
NODE	LOCATION	DATE	REV NO.	PREPARED BY	CHECKED BY

Pg. of

Figure A-C-47. Nodal Timing Plan Worksheet--Node #1

b. Node #2. The timing plan for Node #2 differs from Node #1 in that the master timing source is an AN/TSQ-111 (Figure A-C-48). If the CNCE CBFS fails, the alternate nodal timing source listed in Part I of the worksheet would be implemented. In this case, AN/TSQ-111 #5 would be slaved, via AN/TRC-170 #30, to a DTG received from Node #5. The only change in equipment timing configuration at the CNCE and this reconfiguration should be automatic. To enable this automatic reconfiguration to be accomplished, a patch from the BLACK IDF Group Modem Parallel Clock Output associated with the DTG from AN/TRC-170 #30 to TREF 1 on the BLACK IDF would be required to have been accomplished before the CBFS failure. If the CNCE became totally disabled, the alternate source listed in Part I could still be implemented by recabling the AN/TTC-39 DTGs directly to the AN/TRC-170 #30 and the configuration of the CS data base to accommodate the individual DTGs. Switch timing could not be slaved to the DTG being received from Node #5. The information presented on the worksheet under the alternate columns associated with AN/TSQ-111 #5 assumes that only the atomic standard within the CNCE has failed. The information presented on the worksheet under the alternate columns associated the AN/TRC-170 and the AN/TTC-39 assumes that a total failure has occurred within AN/TSQ-111 #5.

c. Node #3. The timing plan for Node #3 is presented in Figure A-C-49. To implement the alternate timing source, the timing configuration of both the AN/TTC-39A(V)1 and the GMF terminal must be changed to the slave mode.

d. Node #4. Figure A-C-50 presents the timing plan for Node #4. No alternate timing sources available are presented because the loss of timing from Node 1 would most likely be the result of the loss of the traffic group.

e. Node #5. The timing plan for Node #5 (Figure A-C-51) is similar to that of Node #2 in that the master timing source is a CNCE. The alternate source, however, is the collocated AN/TTC-39A(V)1 instead of a CS would become the master timing source for the node. This change would be accomplished by the automatic switching within the CNCE from the Atomic Standard (master) timing mode to the Group Input (slave) mode. To enable this automatic switching to be accomplished, a patch from the BLACK IDF Group Modem Parallel Clock Output associated with the DTG from AN/TTC-39A(V)1 #23 to TREF 1 on the BLACK IDF would be required before the failure of the atomic standard.

NODAL TIMING PLAN WORKSHEET

Part 1 Nodal Timing		
Master Timing Source AN/TSQ-111 5	Alternate Timing Source DTG From AN/TRC-170 30	Alternate Timing Source Facility/Origin AN/TSQ-111 22/NODE 5

Part II Equipment Timing					
Equipment Type	Master Timing Source	Timing Mode for Operation with Master Source	Alternate Timing Source	Timing Mode for Operation with Alternate Source	Remarks
AN/TSQ-111 5	CBFS	ATOMIC STD	DTG FROM TRC-170 30	GROUP INPUT	
AN/TTC-39A(V)1, 6	DTG From TSQ-111 5	SLAVE	DTG FROM TRC-170 30	SLAVE	
AN/TRC-170 30	DTG From AN/TSQ-111 5	GROUP	DTG FROM TRC-170 29	MISSION	
AN/TRC-170 13	DTG From AN/TSQ-111 5	GROUP			
GMF 7	TG FROM TSQ-111 5	EXT STD			
AN/TRC-138A 4 OCU-II	GROUP FROM TSQ-111 5	GROUP			
AN/TRC-138A 4 MSM	GROUP FROM TSQ-111 5	STATION			VIA OCU
NODE 2	LOCATION	DATE	REV NO.	PREPARED BY	CHECKED BY

Pg. 1 of 1

Figure A-C-48. Nodal Timing Plan Worksheet--Node #2

NODAL TIMING PLAN WORKSHEET

Part 1 Nodal Timing		
Master Timing Source AN/TTC-39A(V)1 9	Alternate Timing Source DTG From GMF 8	Alternate Timing Source Facility/Origin AN/TSQ-111 5/NODE 2

Part II Equipment Timing

Equipment Type	Master Timing Source	Timing Mode for Operation with Master Source	Alternate Timing Source	Timing Mode for Operation with Alternate Source	Remarks
AN/TTC-39A(V)1 9	RB STD	MASTER	DTG FROM GMF 8	SLAVE	
GMF 8	DTG FROM AN/TTC-39A(V)1 9	EXT STD	MISSION DTG FROM GMF 7	SLAVE	
NODE 3	LOCATION	DATE	REV NO.	PREPARED BY	CHECKED BY

Pg. 1 of 1

Figure A-C-49. Nodal Timing Plan Worksheet--Node #3

NODAL TIMING PLAN WORKSHEET

Part 1 Nodal Timing		
Master Timing Source DTG From Node 1	Alternate Timing Source None	Alternate Timing Source Facility/Origin

Part II Equipment Timing					
Equipment Type	Master Timing Source	Timing Mode for Operation with Master Source	Alternate Timing Source	Timing Mode for Operation with Alternate Source	Remarks
AN/TRC-173 11, TGM	Master Group From AN/TRC-174 10	Station Clock	DTG FROM GMF 8	SLAVE	
AN/TRC-173 11, OCU-I	DVOW From AN/TRC-174 10	1	MISSION DTG FROM GMF 7	SLAVE	
RMC 12	DTG From AN/TRC-173 11	Loop			
NODE 4	LOCATION	DATE	REV NO.	PREPARED BY	CHECKED BY

Pg. 1 of 1

Figure A-C-50. Nodal Timing Plan Worksheet--Node #4

NODAL TIMING PLAN WORKSHEET

Part 1 Nodal Timing		
Master Timing Source AN/TSQ-111 22	Alternate Timing Source AN/TTC-39A(V)1 23	Alternate Timing Source Facility/Origin

Part II Equipment Timing					
Equipment Type	Master Timing Source	Timing Mode for Operation with Master Source	Alternate Timing Source	Timing Mode for Operation with Alternate Source	Remarks
AN/TSQ-111 22	CBFS	Atomic STD	DTG FROM AN/TTC-39A(V)1 23	Group Input	
AN/TTC-39A(V)1 23	RB STD	Master	DTG From AN/TSQ-111 22	SLAVE	
AN/TRC-170 21	DTG From AN/TSQ-111 22	Group	DTG From AN/TTC-39A(V)1 23	Group	
AN/TRC-170 29	DTG From AN/TSQ-111 22	Group	DTG From AN/TTC-39A(V)1 23	Group	
GMF 24	DTG From AN/TSQ-111 22	EXT STD	DTG From AN/TTC-39A(V)1 23	EXT STD	
GMF 27	DTG From AN/TSQ-111 22	EXT STD	DTG From AN/TTC-39A(V)1 23	EXT STD	
NODE 5	LOCATION	DATE	REV NO.	PREPARED BY	CHECKED BY

Pg. 1 of 1

Figure A-C-51. Nodal Timing Plan Worksheet--Node #5

If the CNCE failed or was destroyed, the alternate timing scheme should still be implemented by recabling the still operative portions of the node to AN/TTC-39A(V)1 #23, which would then become the master timing source for the node.

f. Node #6. The timing plan for this node (Figure A-C-52) is similar to node #3. The only difference being the type of facility providing the master timing source. At node #6 master timing is provided by an AN/TSQ-146 equipped with a DCPG and the optional rubidium standard while at node #3 timing is provided by the AN/TTC-39A(V)1. Both nodes derive their alternate timing from a DTG received from a distant node.

g. Node #7. The timing plan for Node #7 (Figure A-C-53) is identical to the plan for Node #5 with one exception. There is an AN/TSQ-146 located at Node #7 and it is slaved to the switch instead of the CNCE. This procedure was done on the assumption that the MUX Van is being used as a loop concentrator for AN/TTC-39 series CS #18.

h. Node #8. The timing plan for this node is unusual in that it has two master timing sources, neither of which is located at the node (Figure A-C-54). AN/TRC-170 #14 is slaved to a DTG received, via AN/TRC-170 #15, from Node #7. AN/TRC-170 #15 is slaved to a DTG received, via AN/TRC-170 #14, from Node #2.

i. Node #9. Timing for Node #9 (Figure A-C-55) is provided by node #5. AN/TSQ-146 is slaved to an incoming DTG from the transmission equipment, in this case a GMF terminal. RMC #33 receives from and returns timing to the AN/TSQ-146 via the DTG.

27. AN/TTC-42 Timing Subsystem

a. Timing in the AN/TTC-42 is selected and controlled by the switch maintainer or supervisor using the switches on the timing control panel in the Maintainer/Supervisor Position.

b. The timing subsystem provides timing signals and distributes them throughout the system to coordinate synchronous digital operations. It can function as a master timing device, or it can be slaved by timing signals derived from external sources. The timing subsystem generates, synchronizes, divides, and distributes the timing signals required by each AN/TTC-42 subsystem. Because these timing signals

NODAL TIMING PLAN WORKSHEET

Part 1 Nodal Timing		
Master Timing Source AN/TSQ-146 26	Alternate Timing Source DTG From GMF 25	Alternate Timing Source Facility/Origin / Node 5

Part II Equipment Timing

Equipment Type	Master Timing Source	Timing Mode for Operation with Master Source	Alternate Timing Source	Timing Mode for Operation with Alternate Source	Remarks
AN/TSQ-146 26	RB STD	Master	DTG From GMF 25	SLAVE	
GMF 25	DTG From AN/TSQ-146 26	EXT STD	Mission DTG From GMF 24	SLAVE	
NODE 6	LOCATION	DATE	REV NO.	PREPARED BY	CHECKED BY

Pg. 1 of 1

Figure A-C-52. Nodal Timing Plan Worksheet--Node #6

NODAL TIMING PLAN WORKSHEET

Part 1 Nodal Timing		
Master Timing Source AN/TSQ-111 17	Alternate Timing Source AN/TTC-39A(V)1 18	Alternate Timing Source Facility/Origin _____

Part II Equipment Timing					
Equipment Type	Master Timing Source	Timing Mode for Operation with Master Source	Alternate Timing Source	Timing Mode for Operation with Alternate Source	Remarks
AN/TSQ-111 17	GBFS	ATOMIC STD	DTG From AN/TTC-39A(V)1 18	GROUP INPUT	
AN/TTC-39A(V)1 18	RB STD	MASTER	DTG From AN/TSQ-111 17	SLAVE	
AN/TSQ-146 19	DTG From AN/TTC-39A(V)1 18	SLAVE	DTG From AN/TSQ-111 17	SLAVE	
AN/TRC-170 16	DTG From AN/TSQ-111 17	GROUP	DTG From AN/TTC-39A(V)1 18	GROUP	
AN/TRC-170 20	DTG From AN/TSQ-111 17	GROUP	DTG From AN/TTC-39A(V)1 18	GROUP	
GMF 28	DTG From AN/TSQ-111 17	EXT STD	DTG From AN/TTC-39A(V)1 18	EXT STD	
NODE 7	LOCATION _____	DATE _____	REV NO. _____	PREPARED BY _____	CHECKED BY _____

Pg. of

Figure A-C-53. Nodal Timing Plan Worksheet--Node #7

NODAL TIMING PLAN WORKSHEET

Part 1 Nodal Timing		
Master Timing Source DTG FROM NODE 2 AND NODE 7	Alternate Timing Source Facility/Origin NONE	Alternate Timing Source Facility/Origin

Part II Equipment Timing					
Equipment Type	Master Timing Source	Timing Mode for Operation with Master Source	Alternate Timing Source	Timing Mode for Operation with Alternate Source	Remarks
AN/TRC-170 14	DTG FROM AN/TRC-170 15	GROUP			
AN/TRC-170 15	DTG FROM AN/TRC-170 14	GROUP			
NODE 8	LOCATION	DATE	REV NO.	PREPARED BY	CHECKED BY

Pg. 1 of 1

Figure A-C-54. Nodal Timing Plan Worksheet--Node #8

NODAL TIMING PLAN WORKSHEET

Part 1 Nodal Timing		
Master Timing Source DTG FROM NODE 5	Alternate Timing Source NONE	Alternate Timing Source Facility/Origin

Part II Equipment Timing					
Equipment Type	Master Timing Source	Timing Mode for Operation with Master Source	Alternate Timing Source	Timing Mode for Operation with Alternate Source	Remarks
AN/TSQ-146 32	DTG FROM GMF 31	SLAVE			
GMF 31	MISSION DTG FROM	SLAVE			
RMC 33	DTG FROM AN/TSQ-146 32	LOOP BACK			
NODE 9	LOCATION	DATE	REV NO.	PREPARED BY	CHECKED BY

Pg. 1 of 1

Figure A-C-55. Nodal Timing Plan Worksheet--Node #9

are critical to system operation, two identical timing channels are provided. During operation, one timing channel is online and the other is in the standby mode. The timing subsystem design permits the control subsystem to switch all or part of either timing channel if a failure occurs. The timing subsystem can be operated in either of two operating modes: MASTER mode or SLAVE mode. In the MASTER mode, timing is derived directly from the timing subsystem's MASTER VCXO. In the SLAVE mode, the frequency and phase of the MASTER VCXO is controlled by external timing sources. These external timing sources are supplied to the timing subsystem by TDM Modem No. 1 or Modem No. 7.

28. SB-3865 Timing Subsystem. The function of the timing subsystem is to provide and regulate the timing signals of all subsystems. The network synchronization scheme is based on a master or slave scheme where one or more switches are slaved to a master timing source. The timing of the wave switches is derived from the data transitions from the master timing source or another slave station which in turn is slaved to the master timing source. The SB-3865 is capable of operating as a master or slave station.

a. The bit rate for all synchronous transmission originated or retransmitted by the SB-3865 is controlled by a timing unit (TU). Incoming synchronous bits whose rate is not controlled by the TU of the SB-3865 are accepted at the received bit rate by buffer devices. The outputs of these devices are at rates controlled by the TU. The TU is an element of the timing subsystem and its main component is a VCXO whose operating frequency is capable of being altered and controlled from an external source.

b. When the TU is operating as a slave source, it receives an incoming digital bit stream from a specified termination and applies the necessary control signals to the oscillator so that the oscillator output frequency is locked to the frequency of the incoming bit stream. The SB-3865 is able to slave its TU to the timing recovered from an incoming single channel trunk connected to binding posts 25 or 29 or from any TDM group termination. The timing source selection is controlled by the supervisor using the timing rotary selection switch on the switch module front panel. In a stacked configuration, one of the switches is set up as the controlling unit and the remaining units are synchronized to the controlling unit.

29. AN/TRC-190 Timing. The AN/GRC-226 radio set in the (V)1 and (V)4 interfaces with the GM function of the CM, MD-1270, LGM (V)3 at a rate of 256, 512, or 1,024 Kbps in a balanced NRZ data stream with a square wave timing reference.

30. AN/GRC-224 Timing. The AN/GRC-224 interfaces with the AN/TRC-190 at the group level (256, 512, or 1,024 Kbps data rate signal) which includes a square wave timing signal.

31. AN/MRC-142 Timing. The RT-1601 baseband DATA/CLOCK IN/OUT signals are interfaced through the CDA. Data rates of 144, 288, and 576 Kbps are automatically set by incoming data or selectable through the front panel keypad.

APPENDIX D TO ENCLOSURE A

CREW AND CHANNEL ASSIGNMENT SHEETS

1. Introduction. Crew and channel assignment sheets are used by planners and maintainers to specify the configuration of the equipment. Crew assignment sheets provide a vehicle for planners at any level to specify the configuration of a piece of equipment. The operator or maintainer uses the crew assignment sheet as guidance for setting up and operating the equipment. A channel assignment sheet is used to document channel usage in complex digital groups. Normally, the operator or maintainer is given a crew assignment sheet (CAS) package. The CAS package is prepared by the planner(s) for a given mission. The package consists of a number of sheets. At least one sheet contains general information such as the deployed location and name of the crew chief. Other sheets detail the configuration of each piece of equipment such as a TGM or LGM. The sheets provide details concerning the card complement, patching, strapping options, and switch settings.

a. Crew and Channel Assignment Sheets. This appendix covers the following assignment sheets:

(1) System Summary Sheet. The System Summary Sheet is used to document each transmission system and link that supports the backbone transmission system.

(2) Circuit Summary Sheet. This sheet provides a summary of circuits and equipment associated with a backbone transmission system between two nodes.

(3) TD-1233 RLGM Crew Assignment Sheet. This provides a means for specifying the type of loop modem cards, loop and group connectivity, and switch settings for an RLGM.

(4) TD-1234 RMC Crew Assignment Sheet. This sheet provides a means for specifying the type of loop modem cards, loop and group connectivity, and switch settings for an RMC.

(5) TD-1235 LGM Crew Assignment Sheet. This sheet provides a means for specifying the type of loop modem cards, loop and group connectivity, switch settings, and group time slot usage for an LGM.

(6) TD-1236 TGM Crew Assignment Sheet. This sheet provides a means for specifying the switch settings and groups and supergroup connectivity for a TGM.

(7) TD-1237 MGM Crew Assignment Sheet. This sheet provides a means for specifying the configuration of the MGM.

(8) MD-1026 GM Crew Assignment Sheet. This sheet provides a means for specifying the type of group modem module cards, switch settings, and line and equipment side connectivity for a GM.

(9) MD-1023 LSCDM, MD-1024 HSCDM, MD-1025 RLGM/CD Crew Assignment Sheet. This sheet provides a means for specifying the configuration of the various cable drivers that can be used to support a cable system.

(10) C-10716 OCU-I and C-10717 OCU-II Crew Assignment Sheets. These sheets provide a means for specifying the orderwire terminations and switch settings for an OCU-I or OCU-II.

(11) AN/TRC-170 Crew Assignment Sheet. This sheet provides a means for providing guidance for those items that are peculiar to the AN/TRC-170. This includes items such as site location, antenna type, transmit frequency, and modem switch settings.

(12) Channel Assignment Sheet. This sheet documents the use of time slots in a TRI-TAC group or supergroup. It is normally used for the output of a TGM, RMC, or AN/TTC-39 series CS.

(13) AN/TSQ-146(V) Multiplexer Terminal Crew Assignment Sheet. This sheet provides general guidance concerning site location and the required COMSEC for a deployment.

(14) AN/TSQ-146(V) Multiplexer Terminal Orderwire Connections. This sheet provides a means for identifying the orderwires on all groups that may be connected to AN/TSQ-146(V).

(15) AN/TSQ-146(V) DCPG Crew Assignment Sheet. This sheet provides a means for specifying any timing distribution or synthesizing, patching, and switch assignments required for the DCPG of the AN/TSQ-146(V).

(16) AN/TSQ-111( )(V) CNCE Crew Assignment Sheet. This sheet specifies the type and system rate of a CNCE as well as the size, MSF type, path, and channel rate of each digital group.

(17) AN/TSQ-111( )(V) CNCE Channel Assignment Sheet. This sheet provides a means for specifying the channel reassignments that are to be made by the CRF.

(18) AN/TSQ-111( )(V) CNCE GM Crew Assignment Sheet. This sheet provides a means for specifying pertinent information required for setup of each group modem in the CNCE.

(19) AN/TSQ-111( )(V) CNCE MD-1023 LSCDM Crew Assignment Sheet. This sheet provides a means for specifying pertinent information required for setup of each LSCDM in the CNCE.

(20) AN/TSQ-111( )(V) CNCE Orderwire Connections. This sheet provides a means for identifying the voice and data orderwire circuits configured in a CNCE.

(21) GMF Phase II Satellite Terminal Crew Assignment Sheet. This sheet provides guidance concerning terminal setup, antenna data, and transmit/receive frequencies for the AN/TSC-93B/94A and AN/TSC-85B/100A.

(22) TD-1337(V)/G TSSP Crew Assignment Sheet. This sheet provides a means for specifying the orderwire configuration and remote MUX configuration of a TSSP located in a satellite terminal.

(23) TD-1337(V)/G TSSP RMUX Configuration for Downloading Crew Assignment Sheet. This sheet provides a means for specifying a remote MUX configuration for downloading from a nodal terminal to a nonnodal terminal.

(24) TD-1389 LRM Crew Assignment Sheet. This sheet provides a means for specifying line (user side) and composite interfaces, data rates, and timing options.

(25) AJ Control Modem (AJCM) Crew Assignment Sheet. This sheet provides guidance for configuring the AJCM.

(26) RT-1462/TRC-170 TSSR Crew Assignment Sheet. This sheet provides guidance for configuring the TSSR.

(27) AN/TRC-138A Crew Assignment Sheet. This sheet provides guidance for configuring the AN/TRC-138A.

(28) AN/TRC-173 Crew Assignment Sheet. This sheet provides guidance for configuring the AN/TRC-173.

(29) AN/TRC-174 Crew Assignment Sheet. This sheet provides guidance for configuring the AN/TRC-174.

(30) AN/TRC-175 Crew Assignment Sheet. This sheet provides guidance for configuring the AN/TRC-175.

b. Equipment and Crew Assignment Sheet Planning Guide. Tables A-D-1 and A-D-2 provide the planner with a means to determine which channel and crew sheet need to be filled out for each major equipment item. Table A-D-1 represents the planning guide. The channel and crew assignment sheets are represented by a one- or two-character code. Example Z: D = RMC sheet, H = GM sheet, AA = AN/TRC-138A sheet, etc. An "X" in the CAS code column indicates that the channel or crew assignment sheet represented by that CAS code should be filled out. Table A-D-2 provides an index of channel and crew assignment sheets and their associated codes.

(1) A typical sheet package for an AN/TRC-170 consists of AN/TRC-170 and GM Crew Assignment Sheets, plus TGM and/or LGM sheets as required.

(2) A typical sheet package for an AN/TSQ-146 consists of AN/TSQ-146 and DCPG Crew Assignment Sheets plus TGM, LGM, GM, OCU-I, RLGM, and/or RMC sheets for each piece of equipment to be used. Normally, a channel assignment sheet for the TGM would not be given to operators and maintainers.

(3) A typical crew assignment sheet package for an AN/TSQ-111 CNCE consists of CNCE Crew Assignment Sheets and CNCE Channel Assignment Sheets for each digital group, and CNCE GM and LSCDM. In addition, the CNCE Orderwire Connections Sheet would be required. The CNCE Channel Assignment Sheet is typically several pages in length.

Table A-D-1. Equipment and Crew Assignment Sheet Planning Guide

Equipment	CAS Code
AN/TSQ-111	B, I, P, Q, R, S, T
AN/TTC-39 Series	B, I, J, L
AN/TRC-170	E, F, I, K
AN/TSC-85B	H, U, V, W, X, Y
AN/TSC-93B	U, V, X, Y
AN/TSC-94A	U, V, X, Y
AN/TSC-100A	H, U, V, W, X, Y
AN/TRC-138A	G, H, I, J, AA
AN/TRC-173	D, F, H, I, J, BB
AN/TRC-174	H, I, J, CC
AN/TRC-175	G, H, I, J, DD
AN/TSQ-146	B, E, F, H, I, J, M, N, O
AN/FCC-100(V)5 & (V)6	EE
MD-1270	FF
CV-4180	GG
C-11955	HH
UHF Satellite Terminal	II

Table A-D-2. Index of Crew and Channel Assignment Sheets and Codes

Code	Crew/Channel Assignment Sheet	Paragraph
A	System Summary Sheet	2
B	Circuit Summary Sheet	3
C	TD-1233 RLGM Crew Assignment Sheet	4
D	TD-1234 RMC Crew Assignment Sheet	5
E	TD-1235 LGM Crew Assignment Sheet	6
F	TD-1236 TGM Crew Assignment Sheet	7
G	TD-1237 MGM Crew Assignment Sheet	8
H	MD-1026 GM Crew Assignment Sheet	9
I	MD-1023 LSCDM, MD-1024 HSCDM, MD-1025 RLGM/CD CAS	10
J	C-10716 OCU-1 Crew Assignment Sheet	11
J	C-10717 OCU-2 Crew Assignment Sheet	12
K	AN/TRC-170 Crew Assignment Sheet	13
L	Channel Assignment Sheet	14
M	AN/TSQ-146(V) Crew Assignment Sheet	15
N	AN/TSQ-146(V) Terminal Orderwire Connections	16
O	AN/TSQ-146(V) DCPG Crew Assignment Sheet	17
P	AN/TSQ-111 Crew Assignment Sheet	18
Q	AN/TSQ-146 Channel Assignment Sheet	19
R	AN/TSQ-111 GM Crew Assignment Sheet	20
S	AN/TSQ-111 MD-1023 Crew Assignment Sheet	21
T	AN/TSQ-111 Orderwire Connections	22
U	GMF Satellite Terminal Crew Assignment Sheet	23
V	TD-1337 Crew Assignment Sheet	24
W	TD-1337 RMUX Configuration For Downloading CAS	25

Table A-D-2. (Cont'd)

Code	Crew/Channel Assignment Sheet	Paragraph
X	TD-1389 Crew Assignment Sheet	26
Y	AJ Modem Crew Assignment Sheet	27
Z	RT-1462 TSSR Crew Assignment Sheet	28
AA	AN/TRC-138A/B Crew Assignment Sheet	29
BB	AN/TRC-173A Crew Assignment Sheet	30
CC	AN/TRC-174A Crew Assignment Sheet	31
DD	AN/TRC-175A Crew Assignment Sheet	32
EE	AN/FCC-100 Crew Assignment Sheet	33
FF	MD-1270 Crew Assignment Sheet	34
GG	CV-4180 LTU Crew Assignment Sheet	35
HH	C-11955 VOCU Crew Assignment Sheet	36
II	UHF Satellite Terminal Crew Assignment Sheet	37
JJ	Terminal Configuration Diagram Crew Assignment Sheets	38

2. Transmission System and/or Link Summary Sheet. This sheet (Figure A-D-1) is used to document the transmission systems installed to support a joint contingency operation or exercise. It identifies the transmission equipment at each node that will support each node responsible for the installation, operation, and maintenance of the equipment supporting the system and/or link.

a. System and/or Link Designator. Enter an eight-character system or link designator for each transmission system. Figure A-D-2 provides the format and Tables A-D-3 and A-D-4 provide a list of applicable codes and designators.

b. From "A" Location. Enter the node that is designated as the origination of the system. For example, a typical entry would be JTF.

c. "A" Equipment. Enter the transmission equipment at the "A" location; e.g., AN/TRC-170.

d. Responsible Unit. Enter the unit responsible for installing, operating, and maintaining the equipment; e.g., JCSE.

e. To "B" Location. Enter the distant end node at which the transmission system is terminated.

f. "B" Equipment. Enter the transmission equipment at the "B" location supporting the system.

g. Responsible Unit. Enter the unit responsible for installing, operating, and maintaining the system.

h. Operational Date. Enter the date that the system is required to be up and operating.

3. Circuit Summary Sheet. This sheet (Figure A-D-3) is a two-part worksheet used to identify and define transmission links between nodes. Part I identifies the specific transmission link being defined. Part II documents the circuits assigned to the transmission link. It also specifies the nodes and equipment at the nodes that will terminate the link.

TRANSMISSION SYSTEM/LINK SUMMARY

System Designator	From "A" LOC	"A" Equip	Responsible Unit	To "B" LOC	"B" Equip	Responsible Unit	Operational Date

Figure A-D-1. Transmission System and Link Summary Sheet

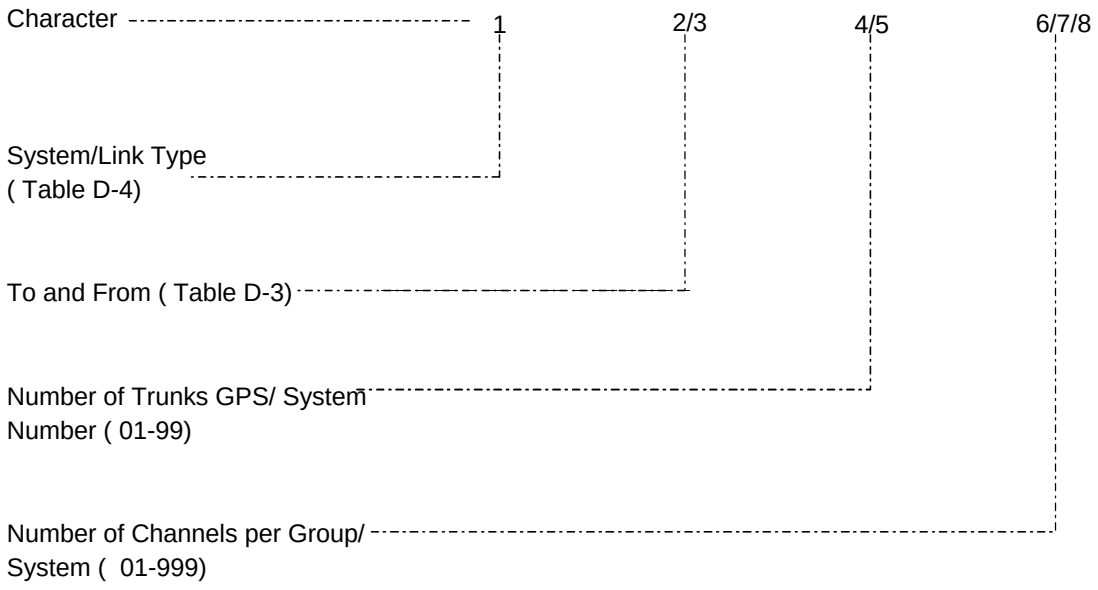

Figure A-D-2. System Link Designator Format

Table A-D-3. CCSD User Codes

Code	User
A	JTF
B	NAVFOR
C	Army Corps Main
D	Army Corps Forward
E	Army Division
F	Marine Combat Service Support Element
G	TACC
H	CRC
I	Spare
J	AFFOR
K	CRP
L	Marine Air Component
M	FTR Wing Operations Center
N	Spare
O	Spare
P	Marine Ground Component CDR
Q	TAOC
R	DCS - Central Area
S	TACC/TADC
T	DISA (Reserved and assigned by DISA for tactical circuits that originate and or transverse the DCS/ DISN)
U	ARFOR
V, W, and X	Spare
Y	JSOTF
Z	MARFOR
1	SFOB
2	AFSOC
3	NSWTG
4	COSCOM

Table A-D-4. System Link Designators

System/Link Types	Letter Designator
SHF Satellite	S
UHF Satellite	A
Tropo	T
Microwave (UHF/SHF)	M
HF Radio	H
LF Radio	L
UHF Radio	U
VHF Radio	V
Cable (26 pair)	C
Cable (Coax)	P
Cable (Fiber Optic)	O
Cable (Other)	Z

a. Part I, System Identification and Description

(1) System and Link Designator. Enter the eight-character system and link designator for the transmission link being defined. Figure A-D-2 provides the format and Tables A-D-3 and A-D-4 provide the necessary codes and designators.

(2) Analog/Digital. Specify whether the system is analog or digital.

(3) Data Rate. Enter the data rate for the transmission link: 72; 128; 144; 256; 288; 512; 576; 1,024; 1,152; 1,536; 2,048; 2,304; 4,096; or 4,608 Kbps. No entry is required for an analog system.

(4) Number of Channels. Enter the number of channels to be assigned to the transmission link.

(5) Modulation. Specify the type of modulation to be used. No entry is required for analog systems.

(6) Multiplex Signal Format Type. Enter the type of MSF to be used: 1, 2, 3a1, 3a2, 3b, 3c, 4a, or 4b. No entry is required for analog systems.

b. Part II, Circuit Summary

(1) Channel Number. Enter the three-digit channel number for the circuit.

Circuit Summary Sheet

Part I - System Identification

System/Link Designator	Analog___ Digital___	Data Rate	No. of Chnls	Modulation Diphase___ Dipulse ___	MSF Type	Page ___ of ___

Part II- Circuit Description

		CCSD									
RP	Chan No.	Use	From/To	"A" Loc	"A" Equip	"B" Loc	"B" Equip	Link 1	Link 2	Link 3	Remarks

Figure A-D-3. Circuit Summary Sheet

(2) Restoration Priority (RP). Enter the two-character code that defines the restoration priority for the circuit.

(3) Control Communications Service Designator (CCSD). Enter the eight-character alphanumeric code that will be used to identify the circuit throughout the joint communications network. Figure A-D-4 defines the CCSD format.

(a) Use Code. Enter the following information in this column:

1. The single-character agency code from Table A-D-5.

2. The two-character purpose and use (PU) code from Table A-D-6.

3. The single-character type of service code from Table A-D-7.

4. Table A-D-8 is a listing of assigned block numbers.

(b) From/To Code. Enter the following information in this column:

1. The single-character "from user" code from Table A-D-3.

2. The single-character "to user" code from Table A-D-3.

3. The two-character alphanumeric sequential character code. Any alphanumeric character (except O and I) may be assigned.

(4) "A" Location. Enter the node/location at which the transmission link will be terminated. Typical entries are JTF, ARFOR, and AFFOR.

(5) "A" Equipment. Enter the equipment at the "A" location that will terminate the transmission link. Typical entries are AN/TSQ-111, AN/TTC-39A(V)1, and AN/TSQ-146, etc.

Character	1	2/3	4	5	6	7/8
Data Chain Name	(o)	(PU)	(S)	(O)	(O)	(XX)

Agency Code (Table A-D-5)

Purpose and Use Code (Table A-D-6)

Type of Service Code (Table A-D-7)

From User Code (Table A-D-8 1/)

To User Code (Table A-D-8 2/)

Sequential Code 3 /

1/ Reference DISAC 310-65-1.

2/ Code T will be assigned for tactical interface circuits that originate or traverse from/to the DCS network.

3/ Any alphanumeric character except O and I may be assigned to digits 7 and 8.

Figure A-D-4. Standard Tactical CCSD Format

Table A-D-5. CCSD Agency Codes

Code	Agency
A	Department of State
B	Department of Navy or US Navy
C	Joint Staff
D	Defense Information Systems Agency
E	Joint Tactical Force Headquarters
F	NCS-Minor Operating Agencies; e.g., DOE
G	General Services Administration
H	Diplomatic Telecommunications System
I	Allied Governments
J	Department of the Air Force
K	Technical Research Institute
L	(FAA) Federal Aviation Administration
M	(NASA) National Aeronautics and Space Administration
N	(DOD) DOD Agencies not listed
O	(FORGN) Host Country
P	(NCS) Other US Departments
Q	(FEMA) Federal Emergency Management Agency
R	USCINCPAC
S	OSD
T	(FORGN) Treaty Organizations
U	Army or US Army
V	CINCENT or USCINCCENT
W	CINCUSJFCOM
X	(DOC) Department of Commerce
Y	Joint Special Operations Task Forces HQ (JSOTF)
Z	MARFOR

Table A-D-5. (Cont'd)

1	ARSOF
2	AFSOF
3	NAVSOF
4	Tactical Support Command, i.e., COSCOM
5	TELRAN Communications Analysis (TCA)
6	CDRFORSCOM
7	USCINCSOC
8	USCINCSO
9	USCINCEUR
0	Spare (CINC assigned)

Table A-D-6. CCSD Purpose and Use Codes

Code	Purpose and Use
AK	Air Force Remote Computer Circuits
B1	Track Supervision Net
B2	Interface Coordination Net
B3	Data Coordination Net
B4	Voice Product Net
CA	TAC Air Defense Network
C6	Computer-Assisted Force Management System
CM	Communications Management
EA	Air Force Security Service
EU	EUCOM-EMC EUCOM Contingency Circuits
EX	Exercise Circuits (For temporary circuits only)
F1	Intercenter Air Traffic Movement and Control--Overseas
F2	Air Traffic Movement and Control Interceptor Radar Handoff
F3	Air Traffic Movement and Control Intraarea Nonradar
F4	Air Traffic Movement and Control Intraarea Radar Handoff
F5	Air Traffic Movement and Control Tower to Tower
F7	Air Traffic Movement and Control Intercenter Nonradar
G2	Weather Message System Center High-Speed Data Circuits
G5	Service From WMSC to Military Station of Weather Info
G7	Service Collect and Disseminate Nonaviation Weather Info
HE	USCENTAF Command and Control Communications
JF	Defense Meteorological Satellite Program
JN	Joint Interface Test Force--Joint Interoperability Tech CMD/Ctrl System
J1	Local Teletype Circuits
J6	National Weather Service Radar FAX
KA	Intelligence
KK	Army Command and Control Network
KL	Keying Lines

Table A-D-6. (Cont'd)

Code	Purpose and Use
KN	NECAP Teletypewriter Network
KW	NCA/JCS Minimum Essential Emergency Communications Network
KX	NMCC Teletypewriter Network
KZ	NMCS Data Transmission
K6	Miscellaneous Remote Facility Circuits
LL	Long Local Subscriber
LP	DSN Loop-Around Trunks
MC	US Marine Corps
MV	US Military Assistance Network
NB	USCENTCOM Command and Control Circuits
NG	National Guard--Training
OL	Link Orderwire
OM	Telemetry Orderwire
ON	Non-DCS Orderwire
OO	System Orderwire
OR	Teletype Orderwire
PA	AF Command Post Voice Network
PB	AF Alternate Command Network
PC	AF Command Network
PH	Army, Air Force, Navy Network
QD	Weather Activities--Miscellaneous
QE	Weather Teletype (Civil FAA,C,O)
QG	Weather Teletype
QI	Weather FAX (Civil, US Weather Bureau)
QJ	Weather FAX
QK	Laser FAX Weather (LASERFAX)
QL	Tactical Imagery Dissemination System (TIDS)
QT	Tactical Analog Interswitch Trunk (TAIST) 1/ Non-DCS

Table A-D-6. (Cont'd)

Code	Purpose and Use
QU	Tactical Digital Interswitch Trunk (TDIST) 1/ Non-DCS
QV	Tactical Message Switch Interswitch Trunk (TMIST) 1/ Non-DCS
RF	PACAF Command and Control Network
RN	Foreign Circuits Between US Components
RO	Foreign Circuits Between Non-US Components
RR	Foreign Circuits Between Non-US and US Components
ST	STU III Intercountry Connectivity
S3	Intelligence and Security Automated Network
TA	TAC Operations Support TTY Network
TD	TAC Remote Computer Circuits
TE	Army, AF, Navy Temp (See DCAC 310-65-1, Chapter 14)
TF	Department of State
TJ$ 2/	CRITICOM Red TDM Package System
TK$2/	CRITICOM Black TDM Package System
TM	DCS AN/FCC-100 Pkg Sys (DTN Only) (Code for Other FCC-100 Trunks)
TN	DCS Time Division Multiplex Package System
TO	Telemetry/Orderwire Package System Trunk
TP	Speech Plus System
TQ	Frequency Subdivided Multiple Modem System (Digital)
TW	Voice Channel Package System
TX	VFCT System
T2	Non-DCS AN/FCC-100 Pkg System (For Use with Type Service Code M)
T4	Non-DCS TDM Pkg System (For Use with Type Service Code "M"/"X")
T5	Non-DCS Statistical TDM Pkg System (Use With Type Svc Code "M")
T6	Tactical Digital Information Link (TADIL)
T7	Tactical Voice Information Link (VOX TELL)
UA	Common User Teletypewriter Service
UB	Common User Voice Service

Table A-D-6. (Cont'd)

Code	Purpose and Use
UC	Trunk Circuit Between Voice Concentrator System Equipment
UD	DCS Secure Voice Communications Network
UE	Common User Digital Data
UF	Common User FAX (Other than Weather)
UG	Electronic Blackboard Communications
UJ	DDN Dial-up Service (DCO to TAC)
UK	DDN Gateway Access Line
UL	DCS Automatic Record Communications Network Circuits
UM	Special Purpose Network (See DCAC 310-65-1, Chap 14)
UN	DDN IMP to IMP Interswitch Trunk Circuit
UO	AF Air Operations Network
UP	TAC to IMP DDN Access Line
UR	Nonsecure Network Ckts (e.g., STU-III) which are part of the DCS
US	DSN Non-tandem IST FM DSN END OFC Switch to DSN Remote Switch
UT	DSN ISW Line FM DSN Node SW to Non-DCS (SVC/AGCY) SW
UU	DSN IST Ckt Connecting DSN Node Switches
UV	DSN Non-tandem IST FM DSN END OFC Switch to DSN End Ofc Switch
UW	Interdepartmental Dial Telephone Network
UX	Non-tandem IST DSN Node/Switch to DSN End Ofc/Remote SW
UY	DSN Dial Subscriber
UZ	Tandem Switch Intersite Trunk Circuit
VC	Trunk Circuit Between Voice Concentrator System Equipment
VQ 3/	Mystic Star Network (JACC/CP)
WE	Comm SVC Not Associated With Circuit Lease (See DCAC 310-65-1)
WF 3/	WASHFAX High-Speed Digital Facsimile

Table A-D-6. (Cont'd)

Code	Purpose and Use
WK 3/	IDHS Access Line (approved by JCS/J-32)
WX	Navy Weather
XD	NWS Digital Facsimile Network (DIFAX)
XQ	GOES, Telephone Facsimile System (GOESFAX)
XZ	NWS Miscellaneous Weather Communications System
YA	Fleet Ship-Shore Access
YB	Alaska Command and Control
YC	USCINCJFCOM Command and Control Network
YD	USCINCSO Command and Control Network
ZA	Satellite Control/Reporting Communications
ZB	Tactical Command and Control
ZD	Search and Rescue
ZH	Army Air Defense Command Intersite Communications
ZK	Ground Forces Air Support Network
ZM	Military Air Traffic Control and Flight Facilities Network
ZN	Intelligence Collection/Dissemination Network
ZS	Air Traffic Control/Flight Facilities
ZX	DSN Access Line Equip for Delivery or Record Traffic thru to DIN

1/ When used with PU codes in the agency code column, indicates various agency codes may be used.
2/ $CCSDs for circuits with these PU codes will be assigned by NSA.
3/ HQ, DISA-controlled network as such will be assigned only by HQ DISA with an associated HQ, DISA circuit number.

NOTE: This list of PU codes is a guide and not all inclusive. See DISAC 310-65-1 for additional PU codes.

Table A-D-7. CCSD Type of Service Codes

Code	Description
A	Teletype Service Other Than DCS Switched Networks
B	DSN Access Line
C	DSN Interswitch Trunk
D	Data Other Than DCS Switched Networks
E	AUTODIN Access Line (See L, Q, and 7)
F	AUTODIN Interswitch Trunk
J	Facsimile or Telephoto Other Than DCS Switched Networks
K	Continuous Wave
L	DSSCS AUTODIN Access Line
M	Package System. No Channel Accounting by DISA
N	TBD
P	Interswitch Trunk/Circuit for Switched Networks Other Than DSN or AUTODIN
Q	AUTODIN Interchange Circuits, Circuits Between AUTODIN and Other Switched Networks, Except DSN
R	Alternate Voice/Record Other Than DCS Switched Networks
S	Video
T	Telemetry Other Than DCS Switched Networks
U	European Telephone System Access Line
V	Voice Other Than DCS Switched Networks
W	European Telephone System Interswitch Trunk
X	Package System, Channel Accounting by DISA
Y	Signaling, dc, or Audio, Other Than DCS Switched Networks
Z	Non-DSN Intersite Trunk Circuit
1	Automatic Message Processing System
2	AMPS Trunk between AMPS Switches
3	FTS Access Line
4	FTS Interswitch Trunk
7	Indirect AUTODIN Access Through an Intermediate Relay
8	DDN Interswitch Trunk Circuit
9	DDN Access Line

Table A-D-8. DISA Block Number Assignments for Tactical Interface Circuits to Deployed CINCs

CINC	Block Number Assignment
USCINCCENT	AA-CZ A0-C9
USCINCJFCOM	DA-FZ D0-F9 GA-JZ G0-J9
USCINCSOC	KA-MZ K0-M9
USCINCSO	NA-QZ N0-Q9
USCINCEUR	RA-TZ R0-T9
USCINCPAC	WA-YZ W0-Z9

NOTE: Do not use the letters I and O.

(6) "B" Location. Enter the distant end location at which the transmission link is terminated. Typical entries are JTF, ARFOR, and AFFOR.

(7) "B" Equipment. Enter the equipment at the "B" location that will terminate the transmission link. Typical entries are AN/TSQ-111, AN/TTC-39A(V)1, and AN/TSQ-146, etc.

(8) Link 1, Link 2, Link 3. Enter the eight-character system link designator for each transmission link that will carry the circuit. Note that the entries in the Link 1 column will be the same as the system link designator entered in Part I of the circuit summary.

4. TD-1233, RLGM Crew Assignment Sheet. The TD-1233 RLGM sheet (Figure A-D-5) provides a means for specifying two of the loop modem cards, loop and group connectivity, and switch settings for an RLGM.

RLGM:	ASSEMBLAGE:
	LOCATION:

NOTES:

1. For normal operation set Norm/Lp switch to Norm.
2. "ON" provides DC power to terminal equipment.

AAU GAIN LEVELS		
POSITION	XMT	RCV
1	+3 dB	+3 dB
2	0 dB	0 dB
3	-10 dB	-10 dB
4	-20 dB	-20 dB

CCA SLOT NO.	CHAN NO.	SETTINGS				REMARKS
		ANALOG (AAU)			DIGITAL (L M)	
		XMIT GAIN	RCV GAIN	MODE 1	PWR FEED 2	(TERMINALS/SUBSCRIBERS/CCSD)
A6	1	S4__(1-4)	S6__(1-4)	NORM__LP_	ON__OFF__	
	2	S3__(1-4)	S5__(1-4)	NORM__LP_	ON__OFF__	
A7	3	S4__(1-4)	S5__(1-4)	NORM__LP_	ON__OFF__	
	4	S3__(1-4)	S5__(1-4)	NORM__LP_	ON__OFF__	

A10	CHAN RATE: 32 Kbps____ 16 Kbps_____	
A11	TIMING: MASTER ____ LOOP _____	

Notes:	RLGM CONNECTIONS
	REMOTE POWER OUT (FRONT PANEL): ON____OFF____

Pg. of

Figure A-D-5. TD-1233, RLGM Crew Assignment Sheet

a. RLGM Number. If the RLGMs are numbered in the communications plan, enter the RLGM number.

b. Assemblage. Enter the assemblage where the RLGM is installed, if applicable.

c. Location. Enter the location of the RLGM.

d. Settings, Analog AAU CCA, Transmit (XMIT) Gain. Enter the transmit gain switch setting (1-4) for the AAU card. A table of switch settings is on the sheet.

e. Setting, Analog AAU CCA, Receive (RCV) Gain. Enter the receiver gain switch setting (1-4) for the AAU card. A table of switch settings is on the sheet.

f. Setting, Analog AAU CCA, Mode. Check "NORM" for normal channel operation or "LP" for channel loopback.

g. Setting, Digital LM CCA, Power Feed (ON/OFF). Check "ON" if the digital loop modem will supply common battery power to the digital telephone and "OFF" if it will not supply power.

NOTE: Entering data in the XMIT gain and RCV gain columns will cause the technician to select an AAU card. Entering data in the power channels on each card, channels 1 and 2, or 3 and 4, must both be either digital or analog.

h. Remarks (Terminal/Subscriber/CCSD). Enter identifying data for each circuit. For a telephone instrument, this would include subscriber number, subscriber name, and CCSD (if assigned).

i. Channel Rate. Check "32 Kbps" or "16 Kbps."

j. Timing. Check "MASTER" if the RLGM is to provide timing from its internal clock and "LOOP" if the RLGM is to derive timing from the received group.

k. RLGM Connection. Enter the distant group termination (i.e., RMC 2 low group).

l. RLGM Power Source, Remote Power. Check "ON" if powered by the CX-11230 cable and "OFF" if it is to be powered by local power.

5. TD-1234, RMC Crew Assignment Sheet. The TD-1234 sheet (Figure A-D-6) provides a means for specifying the type of loop modem cards, loops and group connectivity, and switch settings for an RMC.

a. RMC Number. If the RMCs are numbered in the communications plan, enter the RMC number.

b. Assemblage. Enter the assemblage where the RMC is installed, if applicable.

c. Location. Enter the location of the RMC.

d. Settings, Analog AAU CCA, XMIT Gain. Enter the transmit gain switch setting (1-4). A table of switch settings is on the sheet.

e. Settings, Analog AAU CCA, RCV Gain. Enter the receiver gain switch setting (1-4). A table of switch settings is on the sheet.

f. Setting, Analog AAU CCA, Mode. Check "NORM" for normal operation or LP for channel loopback.

g. Setting, Digital LM CCA, Power (ON/OFF). Enter "ON" if the digital loop modem will supply common battery power to the digital telephone and "OFF" if it will not supply power.

NOTE: Entering data in the XMIT gain and RCV columns will cause the technician to select an AAU card. Entering data in the power (ON/OFF) column will cause the technician to select a digital loop modem card. Since there are two channels on each card, channels 1 and 2, 3 and 4, 5 and 6, etc., both must be either digital or analog.

h. Remarks (Terminal/Subscriber/CCSD). Enter identifying data for each circuit. For a telephone instrument include subscriber number, subscriber name, and CCSD (if assigned).

i. Low-Group Interface. Enter "ON" if the low-group interface is used and "OFF" if it is not used.

j. Channel Rate. Check "32 Kbps" or "16 Kbps."

RMC:	ASSEMBLAGE:
	LOCATION:

NOTES:

1. For normal operation set Norm/Lp switch to Norm.
2. "ON" provides DC power to terminal equipment.

HIGH GROUP DATA RATES	
POSITION	BIT RATE
2	128
3	144
4	256
5	288
6	512
7	576

AAU GAIN LEVELS		
POSITION	XMT	RCV
1	+3 dB	+3 dB
2	0 dB	0 dB
3	-10 dB	-10 dB
4	-20 dB	-20 dB

CCA SLOT NO.	CHAN NO.	SETTINGS				REMARKS
		ANALOG (AAU)			DIGITAL (LM)	
		XMIT GAIN	RCV GAIN	MODE1	PWR FEED 2	(TERMINALS/SUBSCRIBERS/CCSD)
A9	1	S4__(1-4)	S6__(1-4)	NORM__LP_	ON__OFF__	
	2	S3__(1-4)	S5__(1-4)	NORM__LP_	ON__OFF__	
A10	3	S4__(1-4)	S5__(1-4)	NORM__LP_	ON__OFF__	
	4	S3__(1-4)	S5__(1-4)	NORM__LP_	ON__OFF__	
A11	5	S4__(1-4)	S5__(1-4)	NORM__LP_	ON__OFF__	
	6	S3__(1-4)	S5__(1-4)	NORM__LP_	ON__OFF__	
A12	7	S4__(1-4)	S5__(1-4)	NORM__LP_	ON__OFF__	
	8	S3__(1-4)	S5__(1-4)	NORM__LP_	ON__OFF__	

A6	GROUP	LOW GROUP ON ___ OFF ___	
A15	GROUP	CHAB RATE: 32 Kbps___ 16 Kbps___	
A16	GROUP	TIMING: MASTER___ LOOP_____	

	RMC CONNECTIONS
	HIGH GROUP
	LOW GROUP
	REMOTE POWER OUT (FRONT PANEL) ON____OFF____

Pg. of

Figure A-D-6. TD-1234, RMC Crew Assignment Sheet

k. High-Group Rate Switch Position. Enter the switch position (2-7). A table of switch positions is on the sheet.

l. Timing. Check "MASTER" if the RMC is to provide timing from its internal clock or "LOOP" if the RMC is to derive timing from the received high group.

m. High-Group Connection. Enter the high-group connection at the distant end (i.e., RMC 5, etc.).

n. Low-Group Connection. Enter the low-group connection at the distant end (i.e., RLGM 2, etc.).

o. Low-Group Connection, Remote Power Out. Check "ON" if the RMC is to provide power to an RLGM connected to the low group and "OFF" if it is not to provide power.

6. TD-1235, LGM Crew Assignment Sheet. This sheet (Figure A-D-7) provides a means for specifying the type of loop modem cards, loop and group connectivity, switch settings, and the time slot of each channel in the output group. (See also Table A-D-9.)

a. LGM Number. Enter the LGM number (see Table A-D-9).

b. Assemblage. Enter the assemblage where the LGM is installed.

c. Location. Enter the physical location of the assemblage.

d. Time Slot Number. Enter the time slot number. The time slot numbers begin with one (zero is using the ICD-003 convention) and continue through the total number of channels in the group. The total number of channels in a group is found in Table A-D-10.

(1) This table also provides the time slot location of traffic channel one. (The overhead channel is always the first time slot. Normally, the first traffic channel is the second time slot. At a 576-Kbps group rate and a 32-Kbps VDR, the second time slot is a dummy channel and the third time slot is traffic channel one.)

(2) On the crew assignment sheet, the block next to TRF CHNL NO. 1 will be the second time slot, except at the 576-Kbps rate. In the

LGM:	ASSEMBLAGE:
	LOCATION:

1. Channel 1 is time slot for 16 Kbps channels of 288 or 32 Kbps channels of 576 Kbps group.
2. For normal operation, set Norm/Lp switch to Norm.
3. "ON" provides DC power to terminal equipment

HIGH GROUP DATA RATES	
POSITION	BIT RATE
2	128
3	144
4	256
5	288
6	512
7	576

AAU GAIN LEVELS		
POSITION	XMIT	RCV
1	+ 3 dB	- 3 dB
2	+ 3 dB	0 dB
3	+ 3 dB	+ 10 dB
4	+ 3 dB	+ 20 dB

CCA SLOT NO.	CHAN NO.	TIME SLOT NO. 1	SETTINGS ANALOG (AAU) XMIT GAIN	RCV GAIN	MODE2	DIGITAL (LM) PWR FEED 2	REMARKS (TERMINAL/SUBSCRIPTION/CCSD)
A6	1	2	S3___(1-4)	S5___(1-4)	NORM__LP__	ON__OFF__	
	2	3	S4___(1-4)	S6___(1-4)	NORM__LP__	ON__OFF__	
A7	3	4	S3___(1-4)	S5___(1-4)	NORM__LP__	ON__OFF__	
	4	5	S4___(1-4)	S6___(1-4)	NORM__LP__	ON__OFF__	
A8	5	6	S3___(1-4)	S5___(1-4)	NORM__LP__	ON__OFF__	
	6	7	S4___(1-4)	S6___(1-4)	NORM__LP__	ON__OFF__	
A9	7	8	S3___(1-4)	S5___(1-4)	NORM__LP__	ON__OFF__	
	8	9	S4___(1-4)	S6___(1-4)	NORM__LP__	ON__OFF__	
A10	9	10	S3___(1-4)	S5___(1-4)	NORM__LP__	ON__OFF__	
	10	11	S4___(1-4)	S6___(1-4)	NORM__LP__	ON__OFF__	
A11	11	12	S3___(1-4)	S5___(1-4)	NORM__LP__	ON__OFF__	
	12	13	S4___(1-4)	S6___(1-4)	NORM__LP__	ON__OFF__	
A12	13	14	S3___(1-4)	S5___(1-4)	NORM__LP__	ON__OFF__	
	14	15	S4___(1-4)	S6___(1-4)	NORM__LP__	ON__OFF__	
A13	15	16	S3___(1-4)	S5___(1-4)	NORM__LP__	ON__OFF__	
	16		S4___(1-4)	S6___(1-4)	NORM__LP__	ON__OFF__	
A5	GROUP		CHAN RATE: 32 Kbps___16 Kbps ___ RATE: ___ (2-7)				
A16	GROUP		TIMING: STA CLK___ LOOP___				

NOTES:	GROUP CONNECTIONS
	GM___ GP (1-4) LSCDM___ TED___ TGM___ GP (1-4)___

Pg. of

Figure A-D-7. TD-1235, LGM Crew Assignment Sheet

Table A-D-9. End Item Baseband Equipment

	MD-1023	MD-1024	MD-1026	MD-1035	TD-1235	TD-1237	C-10716	C-10717	TED
AN/TTC -39 Series	2	0	0	0	0	0	0	1	15
AN/TSQ-111	6	0	0	0	0	0	0	0	12
AN/TSQ -146(V)1	2	0	5	8	4	0	1	0	4
AN/TSQ -146(V)2	2	0	5	8	4	0	1	0	4
AN/TSQ-146(V)3	2	0	4	6	3	0	1	0	4
AN/TSC -85B	0	0	1	0	0	0	0	0	4
AN/TSC-100A	0	0	1	0	0	0	0	0	6
AN/ TRC-170	0	0	1	2	1	0	0	0	2
AN/TRC-138A/B	0	1	3	0	0	1	0	1	0
AN/TRC-173A/B	2	0	2	0	0	0	1	0	2
AN/ TRC-174A/B	3	0	1	0	0	0	1	0	0
AN/TRC-175A/B	0	2	4	0	0	2	0	1	0

Table A-D-10. Time Slot Position of Traffic Channel One in an LGM

Group Rate (Kbps)	Total Number of Channels (@ 32 Kbps Voice Digitization Rate)	Time Slot of Traffic Channel One
256	8	Second
288	9	Second
512	16	Second
576	18	Third

576-Kbps case, the first time slot is the block immediately below the block with Note 1.

e. Setting, Analog AAU CCA, XMIT Gain. Enter the transmit gain switch setting (1-4) for the AAU card. A table of switch settings is on the sheet.

f. Setting, Analog AAU CCA, RCV Gain. Enter the receiver gain switch setting (1-4). A table of switch settings is on the sheet.

g. Setting, Analog AAU CCA, Mode. Check "NORM" for normal operation or "LP" for channel loopback.

h. Setting, Digital LM CCA, Power (ON/OFF). Enter "ON" if the digital loop modem will supply common battery power to the digital telephone and "OFF" if it will not supply power.

NOTE: Entering data in the XMIT gain and RCV gain columns will cause the technician to select an AAU card. Entering data in the power (ON/OFF) column will cause the technician to select a digital loop modem card. Since there are two channels on each card, Channels 1 and 2, 3 and 4, 5 and 6, etc., both must be either digital or analog.

i. Remarks (Terminal/Subscriber/CCSD). Enter identifying data for each circuit. For a telephone instrument, this data includes subscriber number, subscriber name, and CCSD (if assigned).

j. Channel Rate. Check "32 Kbps" or "16 Kbps ."

k. Group Rate Switch Position. Enter the group-rate switch position (2-7). A table of switch positions and group data rates is on the sheet.

l. Timing. Place a check beside "STA CLK" if the LGM is to receive station clock timing or "LOOP" if the LGM is to derive timing from the received group.

m. LGM Group Connections. Enter the connections for the group. The possible interfacing equipment is preprinted in the block. The range of values for different interfacing equipment is listed in Table A-D-9. If the interfacing equipment is either a TGM or a GM, also enter the number (1-4) of the group within that TGM or GM. If the interfacing equipment is a TED, also enter the GM or TGM that is next in the equipment chain.

n. Notes. Enter any notes that may be useful. A reference to a systems diagram is often helpful.

7. TD-1236, TGM Crew Assignment Sheet. The TD-1236 sheet (Figure A-D-8) provides a means for specifying the switch settings and group and supergroup connectivity for a TGM. (Supergroup time slot usage is documented on the Channel Assignment Sheet.)

a. TGM Number. Enter the TGM number.

b. Assemblage. Enter the assemblage, (AN/TSQ-146(V), etc.) where the TGM is installed.

c. Location. Enter the physical location of the assemblage.

d. Frame Switch. Enter "YES" if the group uses a TRI-TAC frame protocol and "NO" if the group does not use a TRI-TAC frame protocol.

e. Group Rate. Enter the switch position (0 through 12 except 10). A table of switch positions is on the form.

f. Timing. Check "STA CLK" or "LOOP."

g. Supergroup Rate. Enter the switch position (2 through 14). A table of switch positions is on the sheet.

h. Channel Rate. Check "32 Kbps" or "16 Kbps."

	ASSEMBLAGE:
TGM:	LOCATION:

Notes:

1. Starred data rates nonapplicable to supergroup.
2. Double starred data rates nonapplicable to groups.

GROUP/SUPERGROUP DATA RATES

POSITION	BIT RATE	POSITION	BIT RATE
*0	OFF	8	1024
*1	72	9	1152
2	128	10	1536
3	144	11	2048
4	256	12	2304
5	288	**13	4096
6	512	**14	4608
7	576	--	--

SUPERGROUP FRAME FORMATS

POSITION	FORMAT	RATIO
0	3C	4:2:1:1
1	3B	2:1:1
2	3A3	1:1:1:1
3	3A1	1:1
4	3A2	1:1:1
5	D1	4 RLGMs
6	D2	2 RLGMs
7	SG	SINGLE GROUP

CCA SLOT NO.	GROUP	SETTINGS
A5	1	FRAME: YES √ NO ___ RATE: ___ (0-12)
A6	2	FRAME: YES___ NO ___ RATE: ___ (0-12)
A7	3	FRAME: YES___ NO RATE: (0-12)
A8	4	FRAME: YES___ NO___ RATE: ___(0-12)
A9	SUPER	TMG: STA CLK___ LOOP___
A10	SUPER	RATE ___(2-14)
A12	SUPER	CHAN RATE: 32 Kbps ____ 16 Kbps___ FORMAT: ___(0-7)

Notes:

GROUP/SUPERGROUP CONN

GROUP 1
GM___ LSCDM___ TED___ LGM___ TGM___
GP (1-4)___
GP (1-4,SG)___

GROUP 2
GM___ LSCDM___ TED___ LGM___ TGM___
GP (1-4)___
GP (1-4,SG)___

GROUP 3
GM___ LSCDM___ TED___ LGM___ TGM___
GP (1-4)___
GP (1-4,SG)___

GROUP 4
GM___ LSCDM___ TED___ LGM___ TGM___
GP (1-4)___
GP (1-4,SG)___

SUPERGROUP
GM___ LSCDM___ TED___ LGM___ TGM___
GP (1-4)___
GP (1-4)___

Pg of

Figure A-D-8. TD-1236, TGM Crew Assignment Sheet

i. Format. Enter the switch position (0-7) corresponding to the multiplex signal frame format in use. A table of switch positions is on the form.

j. TGM Group Connections. For each TGM group port (1-4) in use, enter the connections for the group. The form provides a separate block for each TGM group port. The possible interconnecting equipment is preprinted in each block. If the interfacing equipment is either a GM or a TGM, also enter the group number (1-4). If the interfacing equipment is a TED, also enter the GM, LGM, or TGM that is next in the equipment chain.

k. TGM Supergroup Connections. Enter the supergroup connection in the same manner as for the group connections. The options are the same as for group connections except that the supergroup cannot be connected to an LGM and would not be connected to the supergroup of another TGM. Also, the supergroup side of a TGM in the AN/TRC-170 may be connected to the TM (Tropo modem).

8. TD-1237, MGM Crew Assignment Sheet. The MGM Crew Assignment Sheet (Figure A-D-9) is used to describe the MGM configuration.

a. MGM Number. Enter the number of the MGM; 1 or 2 as appropriate.

b. Assemblage. Enter the nomenclature and identification of the assemblage; for example, AN/TRC-175 SOI.

c. Location. Enter the physical location of the assemblage.

d. Group Rate. Enter the number representing the group rate for each MGM port being utilized.

e. Group/Master Group Interface. Enter the interfacing equipment for each MGM port being utilized; e.g., GM 1-1, DVOW MUX, Radio 2, etc.

f. Master Group Rate. Enter the master group rate. If the aggregate group inputs exceed 9.216 Mbps, select 17 (18.72 Mbps).

g. Timing and Station Clock. Note that these entries have already been selected. The 16-kHz clock has been hardwired from one of the

MGM:	ASSEMBLAGE:
	LOCATION:

Notes:

1. Starred data rate applicable only when using group logic B CCA (maximum of 3).

2. Double starred data rates nonapplicable to groups.

GROUP/MASTER GROUP DATA RATES						
POSITION	BIT RATE	POSITION	BIT RATE	POSITION	BIT RATE	
0	OFF	6	512	12	2304	
1	70	7	576	13	4096	
2	128	8	1024	14	4608	
3	144	9	1152	*15	4915.2	
4	256	10	1536	**16	9360	
5	288	11	2048	**17	18720	

CCA SLOT NO.	GROUP	SETTINGS	GROUP/MASTER GROUP INTERFACE
A8	1	RATE: _____(0-15)	
A9	2	RATE: _____(0-15)	
A10	3	RATE: _____(0-15)	
A11	4	RATE: _____(0-15)	
A12	5	RATE: _____(0-15)	
A13	6	RATE: _____(0-15)	
A14	7	RATE: _____(0-15)	
A15	8	RATE: _____(0-15)	
A16	9	RATE: _____(0-15)	
A17	10	RATE: _____(0-15)	
A18	11	RATE: _____(0-15)	
A19	12	RATE: _____(0-15)	
A25	MASTER	RATE: 17 ____ TMG: ____ STA CLK: √ LOOP ____ STA CLK: 16 Kbps √ 32 Kbps ____	RADIO ____ HSCD M ____

Notes :

Pg. of

Figure A-D-9. TD-1237, MGM Crew Assignment Sheet

OCU timing outputs, and the preferred mode of operation is to use the OCU phase lock loop to derive timing for the entire assemblage.

h. Master Group Interface. Enter either radio (1, 2, or 3) or HSCDM (1 or 2).

9. MD-1026, GM Crew Assignment Sheet. This sheet (Figure A-D-10) provides a means for specifying the group modem cards, switch settings, and line and equipment side connectivity for a group modem. The data entries are described below.

a. GM Number. Enter the number of the group modem. The number of GMs in different equipment is listed in Table A-D-9.

b. Assemblage. Enter the assemblage where the GM is installed.

c. Location. Enter the physical location of the assemblage.

d. Diphase Modem, Rate. To specify a conditioned diphase group modem module, enter the switch position number for the group data rate. A table of group rates and switch positions is printed on the sheet.

e. Diphase Modem, Orderwire Mode. If a diphase modem has been chosen, check "SYS" to specify the digital orderwire (DVOW and DOW) or "MAINT" to specify the AVOW.

f. Diphase Modem, Rate. To specify a dipulse group modem module, enter the switch position number for the group data rate. A table of group rates and switch positions is printed on the sheet.

g. Dipulse RSTR, XMT MI. If a dipulse modem has been chosen, enter the transmit mileage switch setting for the distance to the coaxial cable termination device (modem or pulse restorer). A table of distances and switch settings is included on the sheet.

h. Dipulse RSTR, RCV MI. If a dipulse modem has been chosen, enter the receive mileage switch setting for the distance to the coaxial cable termination device (modem or pulse restorer). A table of distances and switch settings is included on the sheet.

GM:

Notes:

1. Starred data rates are the only rates available with Dipulse Modem.
2. Rates applicable to LSCDMs are from position 1 to position 11.

ASSESMBLAGE:

LOCATION:

GM/LSCDM DATA RATES

POSITION	BIT RATE	POSITION	BIT RATE
*0	OFF	8	1024
1	72	*9	1152
2	128	10	1536
3	144	11	2048
4	256	*12	2304
*5	288	13	4096
6	512	14	4608
*7	576	--	--

GM DIPULSE MILEAGE SETTINGS

XMT MI (S3)		RCV MI (S4)		DISTANCE
W/PR	WO/PR	W/PR	WO/PR	
1	1	1	3	25 MILE
2	2	2	4	50 MILE
3	3	3	1	75 MILE
4	4	4	4	1 MILE
-	2	-	8	LOOP BACK

MODULE	MODEM	CCA SLOT NO.	CCA	SETTINGS	CABLE (LINE) SIDE CONNECTIONS
1	___DIPHASE	A4	DPHS A	RATE	INTERFACE
		A5	DPHS B	ORDERWIRE MODE SYS:___ MAINT ___	
	___DIPULSE	A4	DPLS A	RATE	CONNECTOR NO.
		A5	CAOW	DIPULSE RSTR:___ XMT MI (S3)___ RCV MI (S4)___	
2	___DIPHASE	A7	DPHS A	RATE	INTERFACE
		A8	DPHS B	ORDERWIRE MODE: SYS ___ MAINT___	
	___DIPULSE	A7	DPLS A	RATE ___	CONNECTOR NO.
		A8	CAOW	DIPULSE RSTR: XMT MI (S3) ___ RCV MI (S4)___	
	___DIPHASE	A11	DPHS A	RATE ___	INTERFACE
		A12	DPHS B	ORDERWIRE MODE: SYS ___ MAINT ___	
3	___DIPULSE	A11	DPLS A	RATE	CONNECTOR NO.
		A12	CAOW	DIPULSE RSTR: XMT MI (S3) ___ RCV MI (S4) ___	
4	___DIPHASE	A14	DPHS A	RATE ___	INTERFACE
		A15	DPHS B	ORDERWIRE MODE: SYS ___ MAINT ___	
	___DIPULSE	A14	DPLS A	RATE	CONNECTOR NO.
		A15	CAOW	DIPULSE RSTR: XMT MI (S3) ___ RCV MI (S4) ___	

EQUIPMENT SIDE CONNECTIONS

MODULE 1			MODULE 2	MODULE 3		MODULE 4	
GM ___	GP (1-4) ___	GM ___	GP (1-4) ___	GM ___	GP (1-4) ___	GM ___	GP (1-4) ___
LSCDM ___		LSCDM ___		LSCDM ___		LSCDM ___	
TED ___		TED ___		TED ___		TED ___	
LGM ___		LGM ___		LGM ___		LGM ___	
TGM ___	GP (1-4.SG) ___	TGM ___	GP (1-4.SG) ___	TGM ___	GP (1-4.SG) ___	TGM ___	P (1-4.SG) ___
MGM	GP (1-12)	MGM	GP (1-12)	MGM	GP (1-12)	MGM	GP (1-12)

Notes:

Figure A-D-10. MD-1026, GM Crew Assignment Sheet

i. Cable (Line) Side Interface. For each modem module (1-4), enter the distant line side interface (e.g., AN/TRC-170 1, group modem, module 2).

j. Connector No. For each modem module (1-4), enter the number of the connector on the external shelter wall to which the modem module is connected.

NOTE: Conditioned diphase modem modules or dipulse modem modules are selected by the technician based on whether the group rate switch setting is entered on the diphase modem line or dipulse modem line.

k. Equipment Side Connections. For each group modem module, enter the equipment side connections for the group. The sheet provides a separate block for each modem module. The possible equipment side interfacing equipment is preprinted on the form. If the interfacing equipment is a GM, TGM, or MGM, also enter the group number. If the interfacing equipment is a TED, also enter the GM, LGM, or TGM that is next in the equipment chain.

10. Cable Driver Crew Assignment Sheet. The CD Crew Assignment Sheet (Figure A-D-11) is used to describe the configuration of the LSCDM, HSCDM, or RLGM/CD.

a. CD Number. Enter the number of the LSCDM, HSCDM, or RLGM/CD.

b. Assemblage. Enter the assemblage where the CD is installed.

c. Location. Enter the physical location of the assemblage.

d. LSCDM

(1) Bit Rate Switch Position. Enter the switch position number (1-11) for the group data rate required. A table of switch positions with corresponding group rates is provided at the top of the sheet.

(2) Cable Current. Check "ON" if the LSCDM is to provide power to LSPRs on the connected cable or "OFF" if no power is required.

LSCDM: HSCDM: RLGM/CD:	ASSEMBLAGE:
	LOCATION:

Notes:

1. Data rates, 72-2048 (1-11) applicable to LSCDM
2. Starred data rates applicable to HSCDM only
3. Double starred data rates applicable to RLGM/CD

CABLE DRIVER DATA RATES

POSITION	BIT RATE	POSITION	BIT RATE	POSITION	BIT RATE
0	OFF	6	512	12	2304
** 1	72	7	576	*13	4096
2	128	8	1024	*14	4608
** 3	144	9	1152	15	4915.2
4	256	10	1536	*16	9360
5	288	11	2048	*17	18720

EQUIP TYPE	CCA SLOT NO.	SETTINGS	CONNECTIONS: EQUIPMENT SIDE	CONNECTIONS: CABLE (LINE) SIDE
LSCDM	A5	RATE: 1 ___ (1-11)	GM ____ GP (1-4) ___ TGM ____ GP (1-4) SG__ MGM ____ GP (1-12)___ TED ____ LGM ___	INTERFACE CONNECTOR NO.
	FRONT PANEL	CABLE CURRENT: ON ____ OFF___ NO. OF LSPR: ____(0-39)		
HSCDM	A5	RATE: 2 ___(13, 14, 16, AND 17)	GM ____ GP (1-4) ___ TGM ____ GP (1-4) SG__ MGM ____ GP (1-12)___ TED ____	INTERFACE CONNECTOR NO.
	FRONT PANEL	CABLE CURRENT: ON___ OFF___ NO. OF HSPR: ____(0-19)		
RLGMCD	A5	TRAFFIC: ON___ OFF___ GP 1 RATE: 3 ____(1,3)	GM ____ GP (1-4) ___ TGM ____ GP (1-4) SG__ MGM ____ GP (1-12)__	INTERFACE CONNECTOR NO.
	A6	TRAFFIC: ON____ OFF____ GP 1 RATE: 3 ____(1,3)	GM ____ GP (1-4) ___ TGM ____ GP (1-4) SG__ MGM ____ GP (1-12)__	INTERFACE CONNECTOR NO.
	FRONT PANEL	REMOTE PWR OUT A (GP1) : ON ____ OFF____	REMOTE PWR OUT B (GP2) : ON ____ OFF ____	

Notes:

Pg. of

Figure A-D-11. Cable Driver Crew Assignment Sheet

(3) Number of LSPRs. Enter the number of LSPRs (0-39) in use on the connected cable.

(4) Equipment Side Connection. Check the appropriate equipment side connection for the LSCDM group. A list of possible interfacing equipment is provided on the sheet. If the interfacing equipment is a GM, TGM, or MGM, enter the group number.

(5) Cable (Line) Side Connection. Enter the distant line side interface; e.g., AN/TRC-170.

(6) Connector Number. Enter the number of the connector (HOC) on the external shelter wall to which the LSCDM group is connected.

e. HSCDM

(1) Bit Rate Switch Position. Enter the switch position number (13, 14, 16, or 17) for the group data rate desired. A table of switch positions with corresponding group rates is provided at the top of the sheet.

(2) Cable Current. Check "ON" if the HSCDM is to provide power to HSPRs on the connected cable or "OFF" if no power is required.

(3) Number of LSPRs. Enter the number of LSPRs (0-39) in use on the connected cable.

(4) Equipment Side Connection. Check the appropriate equipment side connection for the HSCDM group. The possible interfacing equipment is provided on the sheet. If the interfacing equipment is a GM, TGM, or MGM, enter the group number.

(5) Cable (Line) Side Connection. Enter the distant line side interface; e.g., AN/TRC-170.

(6) Connector Number. Enter the HOC on the external shelter wall to which the HSCDM group is connected.

f. RLGM/CD

(1) Traffic. Check "ON" to place groups (1 and/or 2) online or "OFF" to remove from line.

(2) Bit Rate Switch Position. Enter the switch position (1 or 3) for the desired bit rate for groups (1 and/or 2).

(3) Equipment Side Connections. Check the appropriate equipment side connection for RLGM/CD groups (1 and/or 2). The possible interfacing equipment is listed on the sheet for each group. If the interfacing equipment is a GM, TGM, or MGM, enter the group number.

(4) Cable (Line) Side Connections. Enter the distant line side interface (i.e., RLGM 3) for RLGM/CD groups (1 and/or 2).

(5) Connector Numbers. Enter the HOC, for each RLGM/CD group (1 and/or 2) on external shelter wall to which the group is connected.

(6) Remote Power Out. Check "ON" if the RLGM/CD is to power RLGMs on the cable (line) side connections. Remote PWR Out B is for group 2.

11. C-10716 OCU-I Crew Assignment Sheet. The C-10716 sheet (Figure A-D-12) provides a means to specify the orderwire terminations and switch settings. Before filling out this sheet, it is essential to know whether the OCU-I is in an assemblage that is at the end of a link reporting to the CNCE (EOL mode) or whether it is in an assemblage deployed as a relay facility (thru mode).

a. OCU Number. Enter the OCU number if assigned.

b. Assemblage. Enter the assemblage where the OCU is assigned.

c. Location. Enter the physical location of the assemblage.

d. Timing Synthesizing--Group 1 Rate. If "G" was entered in control panel block, enter the rate of the group to which the timing source is slaved: 128, 144, 256, 288, 512, 576, 1,024, 1,152, 1,536, 2,048, 2,304, 4,096, or 4,608 kHz. When the timing source is slaved to the group frequency input, the Group 1 rate is the same for input and output, except for the 1,536-, 2,048-, and 4,096-kHz input frequencies. When the input group frequency selected is one of these latter frequencies, the Group 1 output does not apply. If "M" or a DVOW channel number was

OCU:	Assemblage:
	Location:

Timing Synthesizing: GP-1 Rate: _____ GP-2 Rate: _____		
Control Panel:	Timing Select Switch:	(CH 1-6,MG,M, or G)
CCA Slot No.	Settings	Remarks
A8	DVOW Receive Code ____ (1-16)	
A13	TD:1 On____ Off____ TD:2 On____Off_____ TD 3: On____Off_____	
	Station ID Code S1 (A-Z)____ S2____ (0-9) S3_____ (0-9)	
	DOW Subchannel: S4 (1-13) BER: S5 (0-9)	

Initial Orderwire Connections			
DOW Network Information			
TC _____	TD 1 _____	TD2 Off (Not Used)	TD 3 Off (Not Used)
Notes:			

Pg. of

Figure A-D-12. C-10716, OCU-I Crew Assignment Sheet

Initial Orderwire Connections (Cont'd)					
DVOW Network Information					
CHNL No	Orderwire Termination	Ring Code	Location/ Facility	Ring Code	Location/ Facility
1	GM _____	1		9	
		2		10	
	GP_____	3		11	
		4		12	
	LSCDM _____	5		13	
	RM _____	6		14	
		7		15	
		8		16	
2	GM _____	1		9	
		2		10	
	GP _____	3		11	
		4		12	
	LSCDM _____	5		13	
	RM _____	6		14	
		7		15	
		8		16	
3	GM _____	1		9	
		2		10	
	GP _____	3		11	
		4		12	
	LSCDM _____	5		13	
	RM _____	6		14	
		7		15	
		8		16	

Pg. of

Figure A-D-12. (Cont'd)

Initial Orderwire Connections (Cont'd)					
DVOW Network Information					
CHNL No	Orderwire Termination	Ring Code	Location/Facility	Ring Code	Location/Facility
4	GM ___ GP ___ LSCDM___ RM ___	1		9	
		2		10	
		3		11	
		4		12	
		5		13	
		6		14	
		7		15	
		8		16	
5	GM ___ GP ___ LSCDM___ RM ___	1		9	
		2		10	
		3		11	
		4		12	
		5		13	
		6		14	
		7		15	
		8		16	
6	GM ___ GP ___ LSCDM___ RM ___	1		9	
		2		10	
		3		11	
		4		12	
		5		13	
		6		14	
		7		15	
		8		16	
MOW	GM ___ GP ___ LSCDM___ RM ___	1		9	
		2		10	
		3		11	
		4		12	
		5		13	
		6		14	
		7		15	
		8		16	

Pg. of

Figure A-D-12. (Cont'd)

INITIAL ORDERWIRE CONNECTIONS		
AVOW Network Information		
CHNL No	Orderwire Termination	Remarks
1	GM _ GP (1-4) ___ LSCDM ___ RLGM-CD _ GP (1-2) ___	
2	GM _ GP (1-4) ___ LSCDM ___ RLGM-CD _ GP (1-2) ___	
3	GM _ GP (1-4) ___ LSCDM ___ RLGM-CD _ GP (1-2) ___	
4	GM _ GP (1-4) ___ LSCDM ___ RLGM-CD _ GP (1-2)	
5	GM _ GP (1-4) ___ LSCDM ___ RLGM-CD _ GP (1-2)	
6	GM _ GP (1-4) ___ LSCDM ___ RLGM-CD _ GP (1-2)	
MOW	GM _ GP (1-4) ___ LSCDM ___ RLGM-CD _ GP (1-2)	
NOTES:		

Pg. of

Figure A-D-12. (Cont'd)

entered in control panel block, enter the output frequency for Group 1 that is supplied by the OCU-I timing source.

e. Timing Synthesizing--Group 2 Rate. Enter the output frequency for Group 2 that is supplied by the OCU-I timing source, 128, 144, 256, 288, 512, 576, 1,024, 1,152, 2,304, or 4,608 kHz.

f. Control Panel. Enter the channel number (1-6) if timing is to be derived from a DVOW channel, "M" to select the master clock on the timing source CCA, or "G" if timing is to be derived from a group.

g. DVOW Receive Ring Code. Enter the DVOW ring code (1-16) that the OCU-I should decode and accept on incoming calls.

h. TD 1, 2, and 3. Telemetry decombiners 1, 2, and 3 are set to the "ON" position depending on the number of incoming telemetry signals that must be decombined. For an OCU-I in an assemblage that is in the EOL mode, TD 1, 2, and 3 should be set to the "OFF" position. For an OCU-I in an assemblage that is in the three mode, TD 1 should be set to the "ON" position, and TD 2 and 3 should be set to the "OFF" position. For an OCU-I in an assemblage that contains three radios, each used as a relay facility, all three TDs will be set to the "ON" position. For the AN/TSQ-146(V), TD 2 and TD 3 are always set to the "OFF" position. For the AN/TRC-173, which is always in the EOL mode, all three TDs are set to the "OFF" position. In the AN/TRC-173, TD 2 and TD 3 are not used because of a problem with encrypting telemetry from them.

i. Station TD Code. Enter the station ID (SID) code of the assemblage where the OCU is located. The SID code is comprised of one alpha character and two numerics. SID will always be set to the letter X for the AN/TSQ-146(V), L for the AN/TRC-173, and M for the AN/TRC-174.

j. DOW Subchannel Number. Enter the subchannel (1-13) into which local telemetry will be inserted.

k. BER. Enter the BER threshold which, when exceeded by a radio in a multiradio assemblage, forces a BER report to be included in the transmitted telemetry message. For the AN/TSQ-146(V), AN/TRC-173, and AN/TRC-174, this switch is always set to 0.

l. DOW Network Information. Enter the GM, LSCDM, or radio modem (RM) (AN/TRC-173 and AN/TRC-174 only) to which the telemetry combiner and TD 1 are connected. TD 2 and TD 3 are not used.

m. DVOW Network Information. For each DVOW channel (1-6, maintenance orderwire (MOW)) enter the GM, LSCDM, or RM (AN/TRC-173 and AN/TRC-174 only) to which the DVOW channel will be connected. Then enter the facility name and location beside each of the applicable 16 DVOW ring codes for that channel. (This is essentially an orderwire subscriber directory for the orderwire channel.)

n. AVOW Network Information. For each AVOW channel (1-6, MOW) enter the GM, LSCDM, or RLGM-CD (AN/TRC-173 only) to which the AVOW channel will be connected. The MOW channel is used to convert the AVOW to an unsecured DVOW for fiber optic modems.

NOTE: You cannot simultaneously select the same group modem module in an MD-1026 for AVOW and DVOW. This selection is mutually exclusive.

12. C-10717 OCU-II Crew Assignment Sheet. The C-10717 Crew Assignment Sheet (Figure A-D-13) provides a means for entering a frequency for group 1, which is supplied by the OCU-II specifying the orderwire terminations and switch settings for an OCU-II.

a. OCU Number. Enter the OCU number if one is assigned.

b. Assemblage. Enter the assemblage where the OCU is assigned.

c. Location. Enter the physical location of the assemblage.

d. Timing Control Panel Block 1 Rate. If "G" was entered in subparagraph 12f, enter the rate of the group to which the timing source is slaved: 128, 144, 256, 288, 512, 576, 1,024, 1,152, 1,536, 2,048, 2,304, 4,096, or 4,608 kHz. When the timing source is slaved to the group frequency input, the Group 1 rate is the same for input and output, except for the 1,536-, 2,048-, and 4,096-kHz input frequencies. When the input frequency selected is one of these latter frequencies, the Group 1 output does not apply. If "M" or a DVOW channel number was entered in control panel block, enter the output timing source.

OCU:	Assemblage:
	Location:

Timing Synthesizing: GP-1 Rate GP-2 Rate

Control Panel: Timing Select Switch (CH 1-5,MG,M or G)

CCA Slot No.	Settings	Remarks
A10	DVOW Mux: On ___ Off ___	
A11	DVOW Receive Ring Code:__ (1-16)	
A13	PVT to MG: On___ Off___	
A14	DCM 1: On___ Off___	
A15	DCM 2: On___ Off___	
A16	PVT CHAN: Mux ___Ext ___ TD 1: On ___ Off ___	
A18	Station ID Code: S1___ S2 ___ S3___	
	DOW Subchannel: S4___ (1-13) BER: S5___ (0-9)	

Initial Orderwire Connections

DOW Network Information

	DCM 1		DCM 2	TC	TD 1
CHAN No.	Orderwire Connections	CHAN No.	Orderwire Connections	Orderwire Connections	Orderwire Connections

Pg. of

Figure A-D-13. C-10717, OCU-II Crew Assignment Sheet

Initial Orderwire Connections (Cont'd)					
DVOW Network Information					
CHNL No	Orderwire Termination	Ring Code	Location/Facility	Ring Code	Location/Facility
1	GM	1		9	
	GP (1-4)	2		10	
		3		11	
	LSCDM	4		12	
		5		13	
	HSCDM	6		14	
	Radio	7		15	
		8		16	
2	GM	1		9	
	GP (1-4)	2		10	
		3		11	
	LSCDM	4		12	
		5		13	
	HSCDM	6		14	
	Radio	7		15	
		8		16	
3	GM	1		9	
	GP (1-4)	2		10	
		3		11	
	LSCDM	4		12	
		5		13	
	HSCDM	6		14	
	Radio	7		15	
		8		16	

Pg. of

Figure A-D-13. (Cont'd)

Initial Orderwire Connections (Cont'd)					
DVOW Network Information					
CHNL No	Orderwire Termination	Ring Code	Location/ Facility	Ring Code	Location/ Facility
4	GM ____	1		9	
	GP (1-4) ____	2		10	
		3		11	
	LSCDM ____	4		12	
	HSCDM ____	5		13	
		6		14	
	Radio ____	7		15	
		8		16	
5	GM ____	1		9	
	GP (1-4) ____	2		10	
		3		11	
	LSCDM ____	4		12	
	HSCDM ____	5		13	
		6		14	
	Radio ____	7		15	
		8		16	
6	GM ____	1		9	
	GP (1-4) ____	2		10	
		3		11	
	LSCDM ____	4		12	
	HSCDM ____	5		13	
		6		14	
	Radio ____	7		15	
		8		16	
7	GM ____	1		9	
	GP (1-4) ____	2		10	
		3		11	
	LSCDM ____	4		12	
	HSCDM ____	5		13	
		6		14	
	Radio ____	7		15	
		8		16	

Pg. of

Figure A-D-13. (Cont'd)

Initial Orderwire Connections (Cont'd)					
DVOW Network Information					
CHNL No	Orderwire Termination	Ring Code	Location/ Facility	Ring Code	Location/ Facility
8	GM ____	1		9	
	GP (1-4) ____	2		10	
		3		11	
	LSCDM ____	4		12	
		5		13	
	HSCDM____	6		14	
	Radio ____	7		15	
		8		16	
9	GM ____	1		9	
	GP (1-4) ____	2		10	
		3		11	
	LSCDM ____	4		12	
		5		13	
	HSCDM ____	6		14	
	Radio ____	7		15	
		8		16	
10	GM ____	1		9	
	GP (1-4) ____	2		10	
		3		11	
	LSCD ____	4		12	
		5		13	
	HSCDM ____	6		14	
	Radio ____	7		15	
		8		16	

Pg. of

Figure A-D-13. (Cont'd)

Initial Orderwire Connections (Cont'd)					
DVOW Network Information					
CHNL No	Orderwire Termination	Ring Code	Location/ Facility	Ring Code	Location/ Facility
11	GM ____	1		9	
	GP (1-4) ____	2		10	
		3		11	
	LSCDM ____	4		12	
	HSCDM____	5		13	
		6		14	
	Radio ____	7		15	
		8		16	
MG	GM ____	1		9	
	GP (1-4) ____	2		10	
		3		11	
	LSCDM ____	4		12	
	HSCDM ____	5		13	
		6		14	
	Radio ____	7		15	
		8		16	
P	GM ____	1		9	
	GP (1-4) ____	2		10	
		3		11	
	LSCDM ____	4		12	
	HSCDM____	5		13	
		6		14	
	Radio ____	7		15	
		8		16	
MOW	GM ____	1		9	
	GP (1-4) ____	2		10	
		3		11	
	LSCDM ____	4		12	
	HSCDM____	5		13	
		6		14	
	Radio ____	7		15	
		8		16	

Pg. of

Figure A-D-13. (Cont'd)

INITIAL ORDERWIRE CONNECTIONS (Cont'd)		
AVOW Network Information		
CHNL No	Orderwire Termination	Remarks
1	GM ____ GP (1-4) ____ LSCDM ____ HSCDM ____ Radio _____	
2	GM ____ GP (1-4) ____ LSCDM ___ HSCDM ___ Radio ____	
3	GM _ GP (1-4) ____ LSCDM ____ HSCDM ____ Radio ____	
4	GM _ GP (1-4) ____ LSCDM ____ HSCDM ____ Radio ____	
5	GM___ GP (1-4) ___ LSCDM ___ HSCDM ___ Radio ____	
6	GM _ GP (1-4) ____ LSCDM ____ HSCDM ____ Radio ____	
MOW	GM GP (1-4) _____ LSCDM ____ HSCDM ____ Radio ____	
NOTES:		

Pg. of

Figure A-D-13 (Cont'd)

e. Timing Synthesizing--Group 2 Rate. Enter the output frequency for Group 2, 128, 144, 256, 288, 512, 576, 1,024, 1,152, 2,304, or 4,608 kHz.

f. Control Panel. Enter the channel number (1-5 or MG) if timing is to be derived from a DVOW channel, "M" to select the master clock on the timing source CCA, or "G" if timing is to be derived from a group.

g. DVOW MUX. Enter "ON" to turn on the DVOW multiplexer for normal operation. Enter "OFF" if the DVOW multiplexer is not to be used.

h. DVOW Receive Ring Code. Enter the ring code (1-16), which the OCU-II should decode and accept on incoming calls.

i. PVT to MG. Enter "ON" to connect the P channel to the MG channel. Enter "OFF" if these two external DVOWs will not be connected together.

j. DCM 1 and 2. Enter "ON" to turn on one or both DCM. Enter "OFF" to turn off one or both DCMs. Each DCM multiplexes up to seven 2-Kbps incoming data orderwire channels into a 16-Kbps signal that is connected to the DVOW MUX or the MGM orderwire port.

k. PVT Channel. Enter "MUX" to connect the P channel to the DVOW multiplexer. Enter "EXT" to have the P channel bypass the DVOW multiplexer.

l. TD-1. Enter "ON" to turn on telemetry decombiner 1 (incoming telemetry is to be decombined so that local telemetry can be inserted into the stream). Enter "OFF" to turn off TD 1.

m. Station ID code. Enter the station ID code of the assemblage where the OCU is located. The station ID code is comprised of one alpha character and two numerics. S1 will always be set to the letter R for the AN/TRC-138A and S for the AN/TRC-175. No letter has been assigned to the AN/TTC-39A(V)1 because the AN/TTC-39A(V)1 does not generate its own telemetry.

n. DOW Subchannel Number. Enter the subchannel (1-13) into which local telemetry will be inserted. In the AN/TTC-39A(V)1, leave this entry blank.

o. BER. Enter the BER threshold (0-9). For the AN/TRC-138A and AN/TRC-175, this switch is always set to 0.

p. DOW Network Information. Enter each GM, radio, or HSCDM that has its 2-Kbps incoming data orderwire signal connected to a data channel multiplexer (DCM) channel. Enter the connections for the telemetry combiner and TD1. The TC may be connected to a DCM channel, a GM, or an HSCDM. In the AN/TTC-39A(V)1, there are no telemetry combiners or decombiners.

q. DVOW Network Information. For each DVOW channel (1-11, MG, P, MOW), enter the GM, LSCDM (AN/TTC-39A(V)1 only), HSCDM, or radio to which the DVOW channel will be connected. Then, enter the facility name and location beside each of the applicable 16 DVOW ring codes for that channel. (This is essentially an orderwire subscriber directory for the orderwire channel.)

r. AVOW Network Information. For each AVOW channel (1-6, MOW), enter the GM, LSCDM (AN/TTC-39A(V)1 only) HSCDM, or radio to which the AVOW channel will be connected. The MOW channel is used to convert the AVOW to digital form for fiber optics modems.

NOTE: You cannot simultaneously select the same GM module in a MD-1026 for AVOW and DVOW. This selection is mutually exclusive. The AN/TRC-138A and AN/TRC-175 contain the MD-1026 GM.

13. AN/TRC-170 Crew Assignment Sheet. This worksheet (Figure A-D-14) is used to convey the configuration of AN/TRC-170 peculiar items. It is used in conjunction with the LGM, TGM, and GM/LSCDM Crew Assignment Sheets to make a CAS package for an AN/TRC-170. Note that most entries have blocks for both the local terminal and the distant terminal. These entries provide insight for the crew of the local terminal into the configuration of the distant terminal.

a. Crew Chief. Enter the name of the crew chief.

b. Site Designation. Enter the site designation if assigned.

c. Shelter Type and Serial Number. Enter the shelter type and serial number.

d. Operating Mode. Enter "Tropo" or "LOS."

AN/TRC-170:			
Item	Assigned	Remote Terminal	Remarks
1. Crew Chief			
2. Site Designation			
3. Shelter Type & Serial No.			
4. Operating Mode			Tropo or LOS
5. Map Reference			
6. Grid Coordinates of Terminal			
7. Latitude	Deg Min Sec	Deg Min Sec	
8. Longitude	Deg Min Sec	Deg Min Sec	
9. Magnetic Declination from True North	Deg Min Sec	Deg Min Sec	
10. Path Length to Remote Terminal			Statute Miles & Kilometers
11. Terminal Timing Mode			RBSTD/Mission/ Group
12. Transmitting Data	Watts		
Output Power Operate	kV		
Beam Voltage	kV		
Pri Freq 1	MHz		
Pri Freq 2	MHz		
Alt Freq 1	MHz		
Alt Freq 2	MHz		

Pg. of

Figure A-D-14. AN/TRC-170, Crew Assignment Sheet

Item	Assigned Terminal	Remote Terminal	Remarks
13. Receiving Data			
Pri Freq 1	MHz	MHz	
Pri Freq 2	MHz	MHz	(N/A (V)3)
Alt Freq 1	MHz	MHz	
Alt Freq 2	MHz	MHz	(N/A (V)3)
14. Antenna Data			
Antenna Type			
Soil Condition			
Contact Search Azimuth (Mag)	Deg	Deg	
Contact Search Elevation			
Transmit Polarization			
Ant 1			
Ant 2			(N/A (V)3)
Receive Polarization			
Ant 1, Rcvr 1			Same as XMTR 1
Ant 1, Rcvr 4			(N/A (V)3)
Ant 2, Rcvr 2			Same as XMTR 2
Ant 2, Rcvr 3			(N/A (V)3)
15. COMSEC Requirements			
TED 1 Req'd	Yes No		
TED 2 Req'd	Yes No		
DLED 1 Req'd	Yes No		
DLED 2 Req'd	Yes No		
16. Special Instructions/Required Operational Time			

Pg. of

Figure A-D-14. (Cont'd)

Equipment Mission Switch Setting Instructions Tropo Modem			
Group Rate	Mission Rate	Clock Source	Bandwidth
____ Kbps	____ Kbps	Group ____ Mission ____ RB STD ____	3.5 MHz ____ 7 MHz ____

Tropo Orderwire Control Unit (TOCU)	
Receive Code(s)	_____ _____ _____
	1.
	2.
	3.
	4.
	5.
	6.
	7.
	8.
	9.
	10.
	11.
	12.
	13.
	14.
	15.
	16.
Notes:	

Pg. of

Figure A-D-14. (Cont'd)

Equipment Mission Switch Setting Instructions (Cont'd)		
CCA Slot No.	Alarm Monitor (CESE)	
A2A4	Local Regulator and Switch	Remarks
	Station ID Code:	
	Subchannel Select: (1-13)	
A2A6	Telemetry Combiner (Radio Side)	Remarks
	Thru Mode (S1) Up Down	Down inserts local telemetry to Cable Side
	End of Link (S3) Up Down	Down sends telemetry from Radio Side to Cable Side
A2A7	Telemetry Combiner (Cable Side)	Remarks
	Thru Mode (S1): Up Down	Down inserts local telemetry to Radio Side
	End of Link (S3): Up Down	Down sends telemetry from Cable Side to Radio Side
Notes:		

Pg. of

Figure A-D-14. (Cont'd)

e. Map Reference. Enter the map reference.

f. Grid Coordinates. Enter the grid coordinates.

g. Latitude. Enter the latitude of the deployed terminal in degrees, minutes, and seconds.

h. Longitude. Enter the longitude of the deployed terminal in degrees, minutes, and seconds.

i. Magnetic Declination from True North. Enter the magnetic declination in degrees.

j. Path Length to Remote Terminal. Enter the path length.

k. Terminal Timing Mode. Enter the terminal timing mode ("RB STD," "MISSION," or "GROUP"). If the timing mode is group and more than one group traverses the terminal, identify the group (1-4 or LSCDM) from which timing will be derived.

l. Transmitting Data, Output Power Operate. Enter the output power in watts.

m. Transmitting Data, Beam Voltage. Enter the beam voltage in kV.

n. Transmitting Data, Primary Frequency 1. Enter the assigned transmitter frequency in MHz for transmitter one.

o. Transmitting Data, Primary Frequency 2. Enter the assigned transmitter frequency in MHz for the second transmitter. (Enter N/A if the terminal is an AN/TRC-170(V)3.)

p. Transmitting Data, Alternate Frequency 1. If an alternate frequency to primary frequency one has been assigned, enter the frequency in MHz.

q. Transmitting Data, Alternate Frequency 2. If an alternate frequency for transmitter two has been assigned, enter the alternate frequency in MHz. (This procedure will not apply to the AN/TRC-170(V)3.)

r. Receiving Data, Primary Frequency 1. Enter the assigned receive frequency in MHz.

s. Receiving Data, Primary Frequency 2. Enter the assigned receive frequency in MHz. (This procedure will not apply if the transmitting station is an AN/TRC-170(V)3.)

t. Receiving Data, Alternate Frequency 1. If an alternate receive frequency has been assigned to primary receive frequency one, enter the frequency in MHz.

u. Receiving Data, Alternate Frequency 2. If an alternate receive frequency has been assigned to primary receive frequency two, enter the frequency in MHz. (This will be N/A if the transmitting station is an AN/TRC-170(V)3.)

v. Antenna Data, Antenna Type. Enter "9.5" or "6" ft.

w. Antenna Data, Soil Condition. To be supplied later (TBSL).

x. Antenna Data, Contract Search Azimuth (Magnetic). Enter the contact search azimuth in degrees.

y. Antenna Data, Contact Search Elevation. Enter the contact search elevation in degrees.

z. Antenna Data, Transmit Polarization, Antenna 1. Enter the polarization for transmit antenna one.

aa. Antenna Data, Transmit Polarization Antenna 2. Enter the polarization (horizonal or vertical) for transmit antenna two. This polarization must be the opposite of Antenna 1. For the AN/TRC-170(V)3, enter "N/A."

bb. Antenna Data, Receive Polarization, Antenna 1, Receiver 1. Enter the polarization (vertical or horizontal). This polarization should be the same as transmit antenna one at the distant end.

cc. Antenna Data, Receive Polarization, Antenna 1, Receiver 4. Enter the polarization for antenna (vertical or horizontal). This polarization should be the same as for transmit antenna two at the distant end. Enter "N/A" if the local end or distant end is an AN/TRC-170(V)3.

dd. Antenna Data, Receive Polarization, Antenna 2, Receiver 2. Enter the polarization (vertical or horizontal). This polarization should be the same as for transmit antenna two at the distant end. If either terminal is an AN/TRC-170(V)3, it should be the same as for transmit antenna one at the distant end.

ee. Antenna Data, Receive Polarization, Antenna 2, Receiver 3. Enter the polarization (vertical or horizontal) for antenna two, receiver three. This polarization should be the same as for transmit antenna one at the distant end. Enter "N/A" if the local end or distant end is an AN/TRC-170(V)3.

ff. COMSEC Requirements. Enter "YES" or "NO" beside TED 1 required, TED 2 required, GPEE 1 required, and GPEE 2 required.

gg. Tropo Modem, Group Rate. If the clock source is group and a TGM is being used in the AN/TRC-170, enter the rate in (128, 256, 512, or 1,024) of the group from which timing will be derived. If the clock source is "mission" or "rubidium standard" or if the clock source is group and a TGM is not being used, leave blank.

hh. Tropo Modem, Mission Rate. Enter the mission rate (128, 144, 256, 288, 512, 576, 1,024, 1,152, 1,536, 2,048, 2,304, 4,096, or 4,608).

ii. Tropo Modem, Clock Source. Enter "GROUP," "MISSION," or "RB STD."

jj. Tropo Modem, Bandwidth. Enter the transmit bandwidth, "3.5 MHz" or "7.0 MHz."

kk. TOCU, Receive Code(s). Enter up to three 2-digit receive codes that the AN/TRC-170 should respond to on the DVOW network.

ll. TOCU, Station Code Directory. For each station code (1-16), enter the station identification.

mm. Alarm Monitor (CESE). Enter the station ID code that will be included in the alarm monitor status message block sent to the CNCE.

nn. Alarm Monitor (CESE), Local Regulator and Switch CCA, Subchannel Select. Enter the subchannel (1-13) into which local telemetry will be inserted.

oo. Alarm Monitor (CESE), Telemetry Combiner (Radio Side) Through Mode (S1). For normal data operation, enter "DOWN." This entry inserts local telemetry to the cable side. An entry of "UP" means no local telemetry is to be inserted to the cable side.

pp. Alarm Monitor (CESE), Telemetry Combiner (Cable Side)

(1) Through Mode (S1). For normal data operation, enter "DOWN." This entry inserts local telemetry to the radio side. An entry of "UP" means no local telemetry is to be inserted to the radio side.

(a) To pass DOW in both directions, place S3 in the "DOWN" position on both A6 and A7 CCAs. If the AN/TRC-170(V) is at the end of a radio link, place A6 "DOWN" and A7 "UP."

(b) This entry will pass telemetry from the radio to the cable side and originate telemetry to the radio side. With A6 "UP" and A7 "DOWN," telemetry will pass from the cable to the radio side and originate DOW for the cable side.

(2) End of Link (S3). For normal data operation, enter "DOWN." This entry sends telemetry from the cable side to the radio side. If the TRC-170 is at the end of the link, enter "UP" so that no telemetry is sent from the cable side to the radio side.

14. Channel Assignment Sheet. This sheet (Figure A-D-15) is used to document the use of time slots in complex DTGs. It is normally used for the output of a TGM, RMC, or AN/TTC-39A(V)1.

a. Equipment ID. Enter the equipment ID nomenclature.

b. Location. Enter the location of the equipment.

c. High-Speed Termination. Enter the distant end high-speed termination for a TGM, the distant end termination for a complex group from an AN/TTC-39A(V)1, or the distant end termination of the high group from an RMC.

d. Low-Speed Termination. Enter the low-speed termination for each group. Note that a TGM can have up to four low-speed inputs, while an RMC can have only one. If the form is used to document the time slots in a group entering an AN/TTC-39A(V)1, no entry is made for low-speed termination.

Equipment ID:				
Location:				
High Speed Termination				
Low Speed Termination (TGM & RMC)		GP1		
		GP2 (TGM Only)		
		GP3 (TGM Only)		
		GP4 (TGM Only)		
High Speed Time Slot	Low Speed Group or NCMD	Low Speed Time Slot or NCMD CHNL	CCSD	Use/Remarks

Pg. of

Figure A-D-15. Channel Assignment Sheet

e. High-Speed Time Slot. Enter the number of the time slot in the supergroup. Numbering can begin with either one or zero (zero is the convention used in ICD-003). The number of time slots in a group is found by dividing a group rate by the voice digitization rate (VDR).

f. Low-Speed Group Number or NCMD Number. For TGMs or RMCs, enter the low speed group number (1-4 for a TGM or 1 for an RMC) if the channel was input to the multiplexer from a low-speed group. (Some channels at an RMC are local channels and will not have an entry in this column.) For an AN/TTC-39A(V)1, enter the NCMD number (1-16).

g. Low-Speed Time Slot or NCMD Channel. For TGM or RMC, enter the number of the time slot in the group identified in subparagraph 14e. Numbering may start with one or zero. See subparagraph 14e to compute the number of time slots in a group. For an AN/TTC-39A(V)1 enter the channel number (1-9) of the NCMD identified in subparagraph 14f.

h. CCSD. Enter a CCSD if assigned.

i. Use and Remarks. Enter the use of the circuit and any remarks that may be helpful in identifying the circuit. Typical entries include items such as end instrument, subscriber number, subscriber identification, etc.

15. AN/TSQ-146(V) Multiplexer Terminal Crew Assignment Sheet. This sheet (Figure A-D-16) provides general guidance concerning the required COMSEC for an AN/TSQ-146(V) deployment.

a. Crew Chief. Enter the name of the crew chief.

b. Site Designation. Enter the site designation.

c. Model and Serial Number. Enter the model number and serial number of the AN/TSQ-146(V).

d. COMSEC Requirements. For the TEDS, VINSON, and GPEEs, check YES if the COMSEC equipment is required and NO if not required. The VINSON will be required if DVOW is to be used, GPEEs if a DOW is to be used.

Item	Local Terminal	Remarks
1. Crew Chief		
2. Site Designation		
3 Model & Serial No.		
4. COMSEC Requirements		
TED 1 REQ'D	Yes ___ No _____	
TED 2 REQ'D	Yes ___ No _____	
TED 3 REQ'D	Yes ___ No _____	
TED 4 REQ'D	Yes ___ No _____	
TED 5 REQ'D	Yes ___ No _____	
TED 6 REQ'D	Yes ___ No _____	
VINSON REQ'D	Yes ___ No _____	
DLED 1 REQ'D	Yes ___ No _____	
DLED 2 REQ'D	Yes ___ No _____	
Notes:		

Pg. of

Figure A-D-16. AN/TSQ-146(V) Multiplexer Terminal Crew Assignment Sheet

16. AN/TSQ-146(V) Multiplexer Terminal Orderwire Connections. The AN/TSQ-146(V) 1 and 2 can have up to 22 groups over which orderwire communications are possible. The AN/TSQ-146(V)2 is limited to 18 groups. At any one time, only six DVOW and six AVOW channels can be connected to groups. This form (Figure A-D-17) allows the planner to list the orderwires available on each group and the ring codes of each station on the group. Probably there will be very few instances where the number of groups with orderwire available warrants the use of this sheet. The entries are the same for each of the 22 possible groups.

a. Orderwire Terminations. Enter the GM number and GM module number or the LSCDM number.

b. Available Orderwires. Place a check beside AVOW, DVOW, or BOTH depending on available orderwires. (Only an LSCDM can provide AVOW and DVOW simultaneously.)

c. Location or Facility. For each ring code, enter the location or facility name.

17. AN/TSQ-146(V) Digital Clock Pulse Generator (DCPG) Crew Assignment Sheet. The DCPG sheet (Figure A-D-18) provides a means for specifying any timing distribution or synthesizing patching and switch assignments required.

a. Orderwire Terminations. Enter the GM number and GM module number or the LSCDM number.

b. Available Orderwires. Place a check beside AVOW, DVOW, or BOTH depending on the available orderwires.

c. Location. Enter the physical location.

d. RB STD. Specify "ON" if the rubidium standard is installed and is to be used as a master timing source.

e. Terminal Data, Satellite. Enter the satellite orbital location, Atlantic or west Atlantic Ocean, Indian Ocean, or west or east Pacific Ocean.

f. Terminal Data, Azimuth/Elevation. Given the terminal location, enter the appropriate antenna azimuth and elevation requirements in degrees.

NETWORK INFORMATION										
CHNL NO.	ORDERWIRE TERMINATIONS	AVAILABLE ORDERWIRES	RING CODE	LOCATION/ FACILITY	RING CODE	LOCATION/ FACILITY	RING CODE	LOCATION/ FACILITY	RING CODE	LOCATION/ FACILITY
1	GM ____	AVOW ____	1		5		9		13	
	GP(1-4) ____	DVOW ____	2		6		10		14	
	LSCDM ____	BOTH ____	3		7		11		15	
			4		8		12		16	
2	GM ____	AVOW ____	1		5		9		13	
	GP(1-4) ____	DVOW ____	2		6		10		14	
	LSCDM ____	BOTH ____	3		7		11		15	
			4		8		12		16	
3	GM ____	AVOW ____	1		5		9		13	
	GP(1-4) ____	DVOW ____	2		6		10		14	
	LSCDM ____	BOTH ____	3		7		11		15	
			4		8		12		16	
4	GM ____	AVOW ____	1		5		9		13	
	GP(1-4) ____	DVOW ____	2		6		10		14	
	LSCDM ____	BOTH ____	3		7		11		15	
			4		8		12		16	
5	GM ____	AVOW ____	1		5		9		13	
	GP(1-4) ____	DVOW ____	2		6		10		14	
	LSCDM ____	BOTH ____	3		7		11		15	
			4		8		12		16	
6	GM ____	AVOW ____	1		5		9		13	
	GP(1-4) ____	DVOW ____	2		6		10		14	
	LSCDM ____	BOTH ____	3		7		11		15	
			4		8		12		16	
7	GM ____	AVOW ____	1		5		9		13	
	GP(1-4) ____	DVOW ____	2		6		10		14	
	LSCDM ____	BOTH ____	3		7		11		15	
			4		8		12		16	

Pg. of

Figure A-D-17. AN/TSQ-146(V) Multiplexer Terminal, Orderwire Connections

NETWORK INFORMATION										
CHNL NO.	ORDERWIRE TERMINATIONS	AVAILABLE ORDERWIRES	RING CODE	LOCATION/ FACILITY	RING CODE	LOCATION/ FACILITY	RING CODE	LOCATION/ FACILITY	RING CODE	LOCATION/ FACILITY
8	GM ____ GP(1-4) ____ LSCDM ____	AVOW ____ DVOW ____ BOTH ____	1 2 3		5 6 7		9 10 11		13 14 15	
9	GM ____ GP(1-4) ____ LSCDM ____	AVOW ____ DVOW ____ BOTH ____	4 1 2 3 4		8 5 6 7 8		12 9 10 11 12		16 13 14 15 16	
10	GM ____ GP(1-4) ____ LSCDM ____	AVOW ____ DVOW ____ BOTH ____	1 2 3 4		5 6 7 8		9 10 11 12		13 14 15 16	
11	GM ____ GP(1-4) ____ LSCDM ____	AVOW ____ DVOW ____ BOTH ____	1 2 3 4		5 6 7 8		9 10 11 12		13 14 15 16	
12	GM ____ GP(1-4) ____ LSCDM ____	AVOW ____ DVOW ____ BOTH ____	1 2 3 4		5 6 7 8		9 10 11 12		13 14 15 16	
13	GM ____ GP(1-4) ____ LSCDM ____	AVOW ____ DVOW ____ BOTH ____	1 2 3 4		5 6 7 8		9 10 11 12		13 14 15 16	
14	GM ____ GP(1-4) ____ LSCDM ____	AVOW ____ DVOW ____ BOTH ____	1 2 3 4		5 6 7 8		9 10 11 12		13 14 15 16	

Pg. of

Figure A-D-17. (Cont'd)

NETWORK INFORMATION										
CHNL NO.	ORDERWIRE TERMINATIONS	AVAILABLE ORDERWIRES	RING CODE	LOCATION/ FACILITY	RING CODE	LOCATION/ FACILITY	RING CODE	LOCATION/ FACILITY	RING CODE	LOCATION/ FACILITY
15	GM ____ GP(1-4) ____ LSCDM ____	AVOW ____ DVOW ____ BOTH ____	1 2 3		5 6 7		9 10 11		13 14 15	
16	GM ____ GP(1-4) ____ LSCDM ____	AVOW ____ DVOW ____ BOTH ____	4 1 2 3 4		8 5 6 7 8		12 9 10 11 12		16 13 14 15 16	
17	GM ____ GP(1-4) ____ LSCDM ____	AVOW ____ DVOW ____ BOTH ____	1 2 3 4		5 6 7 8		9 10 11 12		13 14 15 16	
18	GM ____ GP(1-4) ____ LSCDM ____	AVOW ____ DVOW ____ BOTH ____	1 2 3 4		5 6 7 8		9 10 11 12		13 14 15 16	
19	GM ____ GP(1-4) ____ LSCDM ____	AVOW ____ DVOW ____ BOTH ____	1 2 3 4		5 6 7 8		9 10 11 12		13 14 15 16	
20	GM ____ GP(1-4) ____ LSCDM ____	AVOW ____ DVOW ____ BOTH ____	1 2 3 4		5 6 7 8		9 10 11 12		13 14 15 16	
21	GM ____ GP(1-4) ____ LSCDM ____	AVOW ____ DVOW ____ BOTH ____	1 2 3 4		5 6 7 8		9 10 11 12		13 14 15 16	

Pg. of

Figure A-D-17. (Cont'd)

NETWORK INFORMATION										
CHNL	ORDERWIRE	AVAILABLE	RING CODE	LOCATION/ FACILITY	RING CODE	LOCATION/ FACILITY	RING CODE	LOCATION/ FACILITY	RING CODE	LOCATION/ FACILITY
22	GM _____	AVOW ___	1		5		9		13	
	GP (1-4) ____	DVOW ___	2		6		10		14	
	LSCDM ____	BOTH ___	3		7		11		15	
			4		8		12		16	

Pg. of

Figure A-D-17. (Cont'd)

g. Terminal Data, Beacon Frequency. Enter the satellite beacon frequency.

h. Terminal Data, OW Frequency. Depending on the frequency, enter the appropriate orderwire frequency in MHz.

i. Terminal Setup. The deployed terminal location data are provided in the Terminal Setup section.

j. Rate Synthesizers 1-4. Enter the switch settings and patching information for each of the four DCPG rate synthesizers.

(1) TMG IN

(a) SW Position. Enter "OFF," "RB STD," or the rate of the group to which the timing source is slaved. One or more of the four DCPG rate synthesizer TMG IN switches may be set to RB STD. Allowable rates are 72, 128, 144, 256, 288, 512, 576, 1,024, 1,152, 1,536, 2,048, 2,304, 4,096, or 4,608 kHz.

(b) Connect To. For group rates listed in subparagraph 17e(1)(a), enter the source of the station clock input which must be patched to the TMG IN jack, such as GM1 GP3 SC OUT.

(2) TMG A OUT

(a) SW Position. Enter the output timing rate from family A: 72, 128, 144, 288, 512, 576, 1,152, 2,304, 1,536, 2,048, 2,304, or 4,608 kHz; or from family B: 128, 256, 512, 1,024, 1,536, 2,048, or 4,096 kHz.

(b) Connect To. Enter the location on the Timing Patch Panel to which the TMG A OUT jack is to be connected, such as TGM3 SC IN.

(3) TMG B OUT

(a) SW Position. Enter the output timing rate from family A: 72, 128, 144, 288, 512, 576, 1,152, 2,304, 2,048, 2,304 kHz; or from family B: 128, 256, 512, 1,024, 2,048 kHz. Select a rate from the same family as selected for TMG A OUT.

(b) Connect To. Similar to subparagraph 17j(1)(b).

DCPG:	Assemblage: Location:

RB STD: On Off						
Rate Synthesizer 1			Timing Distributor 1			
Timing In/Out	SW Position	Connect To 3/	Connect To 3/			
TMG In	kHz		TMG In		TMG Out	
TMG A Out	kHz					
TMG B Out 1/, 2/	kHz					
Rate Synthesizer 2			Timing Distributor 2			
Timing In/Out	SW Position	Connect To 3/	Connect To 3/			
TMG In	kHz		TMG In		TMG Out	
TMG A Out	kHz					
TMG B Out 1/, 2/	kHz					
Rate Synthesizer 3			Timing Distributor 3			
Timing In/Out	SW Position	Connect To 3/	Connect To 3/			
TMG In	kHz		TMG In		TMG Out	
TMG A Out	kHz					
TMG B Out 1/, 2/	kHz					
Rate Synthesizer 4			Timing Distributor 4			
Timing In/Out	SW Position	Connect To 3/	Connect To 3/			
TMG In	kHz		TMG In		TMG Out	
TMG A Out	kHz					
TMG B Out	kHz					

1/ SW position for TMG B Out must be from same rate family as selected for TMG A Out.
2/ The following rates are not permitted as TMG B Out selection: 1,536, 4,096, and 4,608 kHz.
3/ Timing subsystem jacks may be connected to other jacks on the front panel or to the Timing Patch Panel.

Pg. of

Figure A-D-18. AN/TSQ-146(V) DCPG Crew Assignment Sheet

k. Timing Distributors 1-4. These blocks provide for entry of patching information for each of the four DCPG timing distributors. Each timing distributor is used to distribute station clock timing from one input to four outputs at the same group rate.

(1) TMG IN Connect To. Specify where the TMG IN jack is to be patched.

(2) TMG OUT Connect To. Specify up to four locations on the DCPG front panel or Timing Patch Panel where the TMG OUT jacks are to be patched, such as TGM1, TGM2, and TGM3 SC IN.

18. AN/TSQ-111( )(V) CNCE Crew Assignment Sheet. This sheet (Figure A-D-19) provides a means for specifying the type and system rate of a CNCE as well as the size, MSF type, path, and channel rate of each digital group.

a. Node. Enter the node, A-W.

b. CNCE Type. Enter the CNCE type: IA, IB, IIA, or IIIB.

c. Equipment ID. Enter the equipment ID: "CNCnn," where, nn = 01-99.

d. System Rate. Enter 32 Kbps or 16 Kbps for the voice digitization rate.

e. RED IDF Patch -- ID. Automatically entered by the database generation process and notes the location on the RED IDF of the first cross-connect (data input signal) of the group.

f. Group CTID. Enter the group CTID: "ab01"-"ab59" where, a ≠ b, a = A-W; A101-W599 for switch groups; AX01-WX88 for extension groups.

g. Group Size. Enter the number of channels in the group: 5, 8, 9, 16, 18, 32, 36, 48, 64, 72, 128, or 144.

h. MSF Type. Enter the group MSF: 1, 2, 3A1, 3A2, 3A3, 3B, 3C, 4A, or 4B.

Node:					
CNCE Type:					
Equipment ID:					
System Rate (32 or 16 Kbps):					
Patch ID	Group CTID	(CHANs)	MSF Type	Equipment Connectivity from CRF	CHAN Rate (16, 32, MX)

Pg. of

Figure A-D-19. AN/TSQ-111( )(V) Crew Assignment Sheet

i. Equipment Connectivity from CRF. Enter the equipment associated with each group, in order, from the CRF. The equipment ID has the format of "aaaNN" where NN = 01 through 99. Normal order is TED or RBI, CDL or GMX, followed by transmission, switch or multiplexer equipment located external to the CNCE. For transmission assemblage with multiplexer equipment in the group path, the assemblage is listed first, followed by each multiplexer, before entering the next transmission assemblage (see Table A-D-11).

j. Channel Rate. Enter 16 or 32 or MX for mixed group (a combination of 16- and 32-Kbps channels applies to a type 4B MSF).

19. AN/TSQ-111( )(V) CNCE Channel Assignment Sheet. This channel assignment sheet (Figure A-D-20) provides a means for specifying the channel reassignments that are to be made by the CRF.

a. Group CTID. Enter the group CTID. Each group listed in the CNCE crew assignment sheet will have a CNCE channel assignment sheet filled out for it.

b. No. Channels. Enter the size of the group. This information may be obtained from the CNCE CAS.

c. MSF Type. Enter the MSF type. This information may be obtained from the CNCE CAS.

d. Source CTID. Enter the channel to be reassigned to the corresponding channel in the DESTIN CTID column. (See Tables A-D-12 and A-D-13.) For overhead primary and suppressed channels, the Source CTID and DESTIN CTID columns are always the same. For test channels: TPT = Test Pattern (PRBS), ETT = Test Pattern With Error, ONT = Ones Test Pattern, ZET = Zero Test Pattern, CTT = Test Pattern Complement, and CET = Test Pattern with Error Complement.

e. DESTIN CTID. Enter all channels of the group in order. (See Tables A-D-12 and A-D-13.) The first channel is always the overhead primary.

f. CCSD. (See Figure A-D-4 and Tables A-D-3 through A-D-7.)

Table A-D-11. Valid Equipment Identifiers for the CNCE Crew Assignment Sheet

Identifier	Equipment
BHS	Radio Terminal, AN/TRC-175
CDH	High Speed Cable Driver Modem
CDL	Low Speed Cable Driver Modem
CDR	Remote Loop Group Cable Driver Mode
CRF	Channel Reassignment Function
FOI	Fiber Optics Interface Unit
GMX	Digital Group Modem (0705, 0715, 0720) 1/
HSR	High Speed Cable Repeater
LGM	Loop Group Multiplexer
LSR	Low Speed Cable Repeater
MCH	Mobile Subscriber Central
MGM	Master Group Multiplexer
MPX	Multiplexer Van, AN/TSQ-146(V)
PAC	Phase Frame/Rate Converter (2010) 1/
PLL	Phase-Lock-Loop (2005) 1/
RBI	Red/Black Isolator (2120) 1/
RFP	Radio Terminal/D&I Facility, AN/TRC-178
RGM	Remote Loop Group Multiplexer
RMC	Remote Multiplexer Combiner
RRM	Radio Repeater, AN/TRC-174
RTL	Radio Terminal, AN/TRC-173
SAF	Store and Forward Module
SHE	Satellite Terminal, AN/TSC-100A
SLF	Satellite Terminal, AN/TSC-94A
SRR	Support Radio Relay
SSG	Single Channel Satellite Terminal
TAS	Automatic Tactical Switchboard
TCC	Telephone Terminal, AN/TTC-73
TED	Trunk Encryption Device
TGM	Trunk Group Multiplexer
THR	Radio Terminal, AN/TRC-138A

Table A-D-11 (Cont'd)

TMS	Manual Tactical Switchboard
TRT	Tropo Terminal, AN/TRC-170
UCH	ULCS, High Capacity
UCL	Low Capacity ULCS
UCM	ULCS, Medium Capacity
UMH	ULMS, High Capacity
UML	Low Capacity ULMS

1/ Numbers refer to CCA numbers in the CNCE.

g. Use/Remarks. Spare (no reassignment--Source CTID column) must be blank, Overhead Primary, Overhead Suppressed, Traffic, ADT Test, Encrypted (Unstructured Format), Redundant (designates a channel which is double sampled on the multiplexer that created the group), ADT Scan Test, Overhead Redundant, Loopback, Broadcast source (channel is the source of the broadcast-one-way assignment to multiple channels).

20. AN/TSQ-111( ) (V) CNCE GM Crew Assignment Sheet. The CNCE GM sheet (Figure A-D-21) provides a means for specifying pertinent information required for setup of each FM in the CNCE. The CNCE has its own group modem, not the MD-1026.

a. GM Number. Enter the group modem number. All group modems entered on the CNCE sheet should be entered here.

b. CCA Number. Use Table A-D-14 to specify the corresponding CCA number for the identified group modem.

c. Diphase or Dipulse. Enter the mode that will be used.

d. Data-Rate Position. Enter the data-rate position using the table at the top of the sheet. Using the CNCE sheet, the group size related to the modem is multiplied by the system rate to obtain the bit rate. The data-rate position related to the bit rate is entered.

Group CTID:			
No. Channels			MSF Type:
Source CTID	DESTIN CTID	CCSD	Use/Remarks

Pg. of

Figure A-D-20. AN/TSQ-111( )(V) CNCE Channel Assignment Sheet

Table A-D-12. CTID Code Identification

Digital		Analog	
Range	Definition	Range	Definition
A-W	Local Node ID	A-W	Local Node ID
A-W	Adjacent Node ID	A-W	Adjacent Node ID
1-5	Loop-side Group (Switch)	6-9	Loop-side Group (Switch)
X	Loop-side Group (Extension)	X	Not Used
Y	Local Drop (CVSD)	Y	Local Drop (CVSD)
Z	Local Drop (Discrete) Data of Loop Modem	Z	Local Drop (Discrete)
00	Discrete Data or Loop Modem Channel		
01-59	Link-side Group	60-99	Link-side Group
01-99	Loop-side Group (SW)	01-99	Loop-side Group (SW) or Local Drop
C2	CVSD Channel	C2	CVSD Channel
		Channel Number	
001-144 101-116 001-096	Channel of Group 1/ Discrete Data CH CVSD Loop Modem CH	001-012 001-012 001-096	Channel of Group Local Drop Channel CVSD Channel
1-7	Subchannel Number	R T	Receive Side Transmit Side

1/ Any channel in the first half of a nonencrypted digital group may be an overhead channel depending on the groups multiplexing pattern.

Example CTID:

Group	Channel	Subchannel
A B 01	002	7

Table A-D-13. Special CTID Code Identification

Discrete Digital Subchannel	
A-W	Local Node ID
@	Discrete Subchannel
001-032	Subchannel Number
Automatic Digital Test	
ADT	ADT ID
CH SC	Channel ID Subchannel ID
ADT Destination CTDIS	
01-48 01-64	ADT Test Position Channel Number ADT Test Position Channel Number
ADT Source CTDIS	
TP ET ON ZE CT CE	Test Pattern, No Errors Test Pattern, 87/100 Bits in Error All One Bits All Zero Bits Complement of TP Complement of ET
Special Simplex Source CTDIS	
Broadcast Spare ADTSCSO	Broadcast Source ADT One-Bits Pattern on an Unused Ch/Subch ADT-Produced Source for OVHS Framing Subch

<u>Example Special CTID Codes:</u>

A	@	016
ADT	CH	25

GM Traffic Data Rates				GM Mile Switch Positions		
Position	Bit Rate	Position	Bit Rate	Diphase		Dipulse
1	72	8	1024	0	1.75	0.25
2	128	9	1152	0.25	2.0	0.5
3	144	10	1536	0.5		0.75
4	256	11	2048	0.75		1.0
5 (0.2) 1/	288	12	2304	1.0		
6	512	13	4095	1.25		
7 (0.5) 1/	576	14	4608	1.5		

1/ Data rates are the only rates available with the Dipulse modems. Parenthetical positions are for Dipulse modems.
2/ No combined digital orderwire for Diphase modems at positions 1 to 3 or for Dipulse modems.

GM	CCA	Diphase or Dipulse	Data Rate Position	Cable Mile Switch Position	DOW Switch (On or Off)	

Pg. of

Figure A-D-21. AN/TSQ-111( )(V) CNCE GM Crew Assignment Sheet

Table A-D-14. Group Modem Number versus CCA Number

GM Number	CCA Number
GMX01	A10A2A25
GMX03	A10A2A26
GMX04	A10A2A27
GMX05	A10A2A28
GMX06	A10A2A29
GMX07	A10A2A30
GMX08	A10A2A31
GMX09	A10A2A32
GMX10	A10A2A33
GMX11	A10A2A34
GMX12	A10A2A35
GMX13	A10A2A36
GMX14	A10A2A37
GMX15	A10A2A38
GMX16	A10A2A39
GMX17	A10A2A40
GMX18	A10A2A41
GMX19	A10A2A42
GMX20	A10A2A43
GMX21	A10A2A44
GMX22	A10A2A45
GMX23	A10A2A46
GMX24	A10A2A47
GMX25	A10A2A48
GMX26	A10A2A49
GMX27	A10A2A50
GMX28	A10A2A51
GMX29	A10A2A52
GMX30	A10A2A53
GMX31	A10A2A54
GMX32	A10A2A55
GMX33	A10A2A56
GMX02	A10A2A57

e. Cable Mile Switch Position. Enter the mile switch position from the table at the top of the sheet according to the length of operation for the group modem.

f. DOW Switch (ON/OFF). Enter ON if data and digital voice orderwires are to be activated or OFF if analog voice orderwire is to be activated. Operation of the two functions (data or digital voice and analog voice) is mutually exclusive in the group modem.

21. AN/TSQ-111( )(V) CNCE MD-1023 LSCDM Crew Assignment Sheet. This sheet (Figure A-D-22) provides a means for specifying pertinent information required for setup of each LSCDM in the CNCE. There is only one data entry: Data-Rate Position. Enter the data-rate position for each LSCDM appearing on the CNCE sheet. Using the CNCE sheet, the group size associated with an LSCDM is multiplied by the system rate to obtain the bit rate. The data-rate position corresponding to the bit rate is entered.

22. AN/TSQ-111 ( ) (V) CNCE Orderwire Connections. This sheet (Figure A-D-23) provides a means for specifying the voice and data orderwire circuits configured in the CNCE. Each digital and frequency, respectively, destination location or facility, and line-side internal equipment is entered. In addition, each data orderwire circuit (telemetry, teletype, or adjacent CNCE) configured to the CIC is entered. Depending on the specific data orderwire circuits, more sheets may be necessary.

a. Equipment ID. Enter the CNCXX.

b. Node. Enter the node where the CNCE is located.

c. Receive DVOW Ring Code(s). Enter up to three DVOW ring codes (1-16) to be stored into the VSP memory. Any incoming DVOW call with one of these selected ring codes will be detected as a request for communications.

d. Voice Selection Panel. For AVOW and PARKHILL circuits, enter the tone frequency in the Hz (570; 1,200; 1,600, 2,400; or 2,600), the location or facility at the distant end with which communicaitons will be held, and the internal equipment, if any, on the line side of the VSP (e.g., GMXxx, CDLX, etc.). For each DVOW circuit, enter the ring codes (1-16), the location or facility at the distant end with which communicaitons will be held, and the internal equipment on the line side of the VSP (e.g., GMXxx, CDLxx, etc.). Leave blank any circuits that will not be used.

AN/TSQ-111( )(V) CNCE LSCM CREW ASSIGNMENT SHEET

LSCDM Traffic Data Rates			
Position	Bit Rate	Position	Bit Rate
1	72		
2	128		
3	144		
4	256		
5	288		
6	512		
LSCDM	CCA	Data Rate Position	
1	A12A1		
2	A12A2		
3	A12A3		
4	A12A4		
5	A12A5		
6	A12A6		

Pg. of

Figure A-D-22. AN/TSQ-111( )(V) CNCE LSCDM Crew Assignment Sheet

Equipment ID:	Node:

Voice Orderwire

Receive DVOW Ring Code(s): _____ _____ _____

Voice Selection Panel

AVOW				PARKHILL				DVOW			
No	Tone Freq	Location/ Facility	Internal Equip	No	Tone Freq	Location/ Facility	Internal Equip	No	Ring Code	Location/ Facility	Internal Equip
1				15				27			
2				16				28			
3				17				29			
4				18				30			
5				19				31			
6				20				32			
7				21				33			
8				22				34			
9				23				35			
10				24				36			
11				25				37			
12				26				38			
13											
14											

Notes:

Pg. of

Figure A-D-23. AN/TSQ-111( )(V) CNCE, Orderwire Connections

AN\TSQ-111( )(V) CNCE ORDERWIRE CONNECTIONS

Data Orderwire													
Δ Multiplexed Telemetry									☐ Teletype Only				
								Yes = 1, No = 0					
CIC ID	CH ID	Protocol Code	MUX TLM Δ	MUX CH Δ	Equip ID	LKG or RBI	Other End ID	SYNC CLCK= Info Rate Δ	TTY SYN C Mode ☐	INT TTY Clock ☐	TTY Odd Parity ☐	TTY One Stop Bit ☐	TTY Rate bps ☐

Pg. of

Figure A-D-23. (Cont d)

NOTE: Dipulse modems do not provide DVOW. Diphase modems provide DVOW at group rates at and above 256 Kbps. Diphase modems do not provide AVOW and DVOW simultaneously.

e. Data Orderwire. This portion of the worksheet identifies all data orderwire circuits (CESE telemetry, teletype, and adjacent CNCE protocol) connected to the CIC. A total of 20 CIC communication channels are available. The CNCE can process telemetry data from a total of 40 CESEs. (This CESE telemetry should not be confused with the telemetry subchannels of DGM equipment.)

f. CIC ID and CH ID. These entries identify the 20 communications channels in the following order: 1/6, 1/7, 1/10, 1/11, 1/12, 1/13, 1/14, 1/15, 1/16, 1/17, 2/6, 2/7, and 2/10 through 2/17.

g. Protocol Code. For each channel, enter the type of communication an assigned channel transmits or receives. Enter 0 for nonmultiplexed telemetry, 1 for multiplexed telemetry, 2 for adjacent CNCE orderwire, 5 for ASCII teletype, and 6 for Baudot teletype. Unassigned channels are assigned 7 by the CNCE software program.

h. MUX TLM CHS. For communications channels assigned to multiplex telemetry, enter the number (1-13) of active subchannels that are being multiplexed into the telemetry channel. This telemetry channel is received from one or more CESEs and should not be confused with the DGM telemetry subchannel.

i. MUX CH. For communications channels assigned to multiplexed telemetry, enter the specific multiplexed position number of the telemetry data from the CESE entered in the Equipment ID column. A new line should be used for each multiplexed subchannel that contains telemetry from a CESE. The total number of lines used should agree with the number of active subchannels entered in the previous column.

j. Equipment ID. Enter the equipment identifier that indicates the device communicating with the CNCE through the communications (COMM) channel. For telemetry, enter the CESE that is sending the telemetry data. If the telemetry is multiplexed, enter each equipment ID, one per line, which is associated with each active telemetry subchannel. Table A-D-15 lists equipment IDs of CESEs generating telemetry (in the ICD-001A telemetry message, the third alpha character and the two numeric characters "nn" form the assemblage ID). For ASCII teletype,

Table A-D-15. Valid CESE Equipment Identifiers

Equipment ID	CESE Type
TRTnn	Tropo Radio Terminal (AN/TRC-170)
BHSnn	Bottom-of-Hill SRWBR Radio Terminal (AN/TRC-175)
THRnn	Top-of-Hill SRWBR (AN/TRC-138)
RLTnn	LOS Radio Terminal (AN/TRC-173)
RRMnn	LOS Radio Repeater (AN/TRC-174)
RFPnn	LOS Radio Terminal/D&I Facility (AN/TRC-178)
SHEnn	High Capacity Satellite Terminal (AN/TSC-100A)
SLFnn	Low Capacity Satellite Terminal (AN/TSC-94A)
SSGnn	Single Channel Satellite Terminal
MCHnn	Mobile Subscriber Central
MPXnn	Multiplexer Van (AN/TSQ-146(V))

the equipment ID is TYAnn; for Baudot teletype, the ID is TYBnn. For adjacent CNCE orderwire, enter CNAnn.

k. LKG or RBI. Enter either "LKGnn" (the Loop Key Generator Number) or "RBInn" (the Red Black Isolator Number), depending on which equipment is to be installed on the line side of the CIC COMM channel. If the data are to be encrypted (usually an LKG or DLED is at the distant end), Table A-D-15. Valid CESE Equipment Identifiers enter the LKG number. If the data will not be encrypted, enter the RBI number.

l. Other End ID. Enter the node location, A - W of the distant end of the link. Optional for protocol codes of 0, 1, 5, or 6. Leave blank for all other protocol codes.

m. SYNC Clock = Info Rate. Enter 0 if the data rate is two times the information rate; enter 1 if the data rate equals the information rate. Entry is required when the protocol code is 1.

n. TTY SYNC Mode. This entry is for ASCII teletype only. Enter 1 if TTY data are bit and character synchronous; enter 0 if TTY data are character asynchronous.

o. TTY INT Clock. This entry applies to both ASCII and Baudot teletype. Enter 1 if internal CIC timing is used to extract data from the input signal; enter 0 for even parity.

p. TTY ODD Parity. This entry applies to ASCII teletype only. Enter 1 for odd parity; enter 0 for even parity.

q. TTY One-Stop Bit. Enter 1 for one-stop bit; enter 0 for 1 ½-or 2-stop bits (ASCII) or 1 ½-stop bits (Baudot).

r. TTY Rate BPS. Enter the rate of the teletype signal.

23. GMF Phase II Satellite Terminal Crew Assignment Sheet. This sheet (Figure A-D-24) is used to convey the terminal configuration of the AN/TSC-93B/94A and AN/TSC-85B/100A peculiar items. It is used in conjunction with the LRM, TSSP, AJCM, and GM sheets to make a package for either the AN/TSC-93B/94A or AN/TSC-85B/100A.

a. Node. Enter the node, A-W.

b. Terminal Type. Enter the terminal type.

c. Equipment ID. Enter the equipment ID, normally assigned in the same manner as the mission order number.

d. Mission Order. Enter the mission order number, normally assigned by the GMF manager or the Mission Satellite Operation Plan.

e. Antenna Size. There are two primary antennas used with the GMF Phase II Satellite Terminals: an 8-foot parabolic (AS-3036) or 20-foot Quick Reaction Satellite Antenna (QRSA, OE-361). There are two versions of the QRSA: (1) multicarrier and (2) single carrier. Normally, only the AN/TSC-100A(V)1 terminals assigned to ACC have the multicarrier capability. The standard antenna for the AN/TSC-93B and AN/TSC-94A is the 8-foot parabolic. The 20-foot QRSA or equivalent is provided with the AN/TSC-85B or AN/TSC-100A.

TERMINAL IDENTIFICATION	
NODE:	EQUIPMENT ID:
TERMINAL TYPE:	MISSION ORDER:
ANTENNA SIZE:	OPERATING TIME (ZULU):

TROPO ORDERWIRE CONTROL UNIT (TOCU)			
TERMINAL DATA	1	2	TERMINAL SETUP
SATELLITE			UTM GRID ___
AZIMUTH (DEG)			
ELEVATION (DEG)			LATITUDE (DEG) ___
BEACON FREQ (MHz)			
OW FREQ (MHz)			LONGITUDE (DEG) ___

TRANSMIT				
TRANSMIT DATA	COMM 1	COMM 2	COMM 3	COMM 4
FREQUENCY (MHz)				
AMP MIXER ATTENUATOR INPUT (dB)				
AMP MIXER ATTENUATOR OUTPUT (dB)				
DATA RATE (Kbps)				
MODULATION (Q/B)				
ENCODING (COD/UNC)				
SAW FILTER (YES/NO)				
POWER: HPA 1	HPA 2 ___			

RECEIVE				
RECEIVE DATA	COMM 1	COMM 2	COMM 3	COMM 4
FREQUENCY (MHz)				
DATA RATE (Kbps)				
MODULATION (Q/B)				
ENCODING (COD/UNC)				
SAW FILTER (YES/NO)				

Notes:

Pg. of

Figure A-D-24. GMF Phase II Satellite Terminal Crew Assignment Sheet

f. Operating Time. Enter the Start/Stop dates and times for satellite access.

g. Terminal Data. The specified satellite for access, antenna data, beacon, and orderwire frequency information is provided in the Terminal Data section. The AN/TSC-100A is capable of operating over two satellites simultaneously. If transmission to two different satellites is needed, two antennas are required (1 and 2 columns).

h. Terminal Data, Satellite. Enter the satellite orbital location, Atlantic or west Atlantic Ocean, Indian Ocean, or west or east Pacific Ocean.

i. Terminal Data, Azimuth/Elevation. Given the terminal location, enter the appropriate antenna azimuth and elevation requirements in degrees.

j. Terminal Data, Beacon Frequency. Enter the satellite beacon frequency.

k. Terminal Data, OW Frequency. Depending on the frequency, enter the appropriate orderwire frequency in MHz.

l. Terminal Setup. The deployed terminal location data are provided in the Terminal Setup section.

m. Terminal Setup, UTM Grid. Enter the deployed location side-grid coordinates.

n. Transmit. Information concerning the transmitter group is provided in the transmit section.

o. Transmit, Frequency. In a single-carrier mode, the AN/TSC-93B and AN/TSC-94A only have the capability to enter the Comm 1 upconverter transmit frequency in MHz. However, the AN/TSC-85B and AN/TSC-100A have a multicarrier capability. An amplifier/mixer may be used to combine one to four RF (Comm 1-Comm 4) carrier signals onto a single patch. (All carrier signals need to be within a 40-MHz bandwidth because of the bandpass limitation of the high-power amplifier (HPA)). Alternatively, another method for combining two signals is by the diplexer/combiner. The combining method, if applicable, should be detailed in the notes section provided. In a multicarrier application, the

transmit upconverter frequency in MHz should be entered for each carrier.

p. Transmit, Amp Mixer Attenuator Input. The output of each upconverter may be attenuated by the amp/mixer depending on the transmit power allocated to each carrier. The attenuation in dB should be entered for each upconverter input provided to the amp/mixer.

q. Transmit, Amp Mixer Attenuator Output. The composite output of the amp/mixer may be attenuated. This is typically required when combining the output signals from both high-power amplifiers. The attenuation in dB should be entered.

r. Transmit, Data Rate. Enter the composite (or total) transmit and receive data rate for each carrier. This data rate is applicable to the MD-945. Using binary phase shift-keying (BPSK) modulation, the modem is capable of operating at data rates between 16 Kbps and 2.499 Mbps. Using quadriphase shift keying (QPSK) modulation, the modem is capable of operating at data rates between 100 Kbps and 4.999 Mbps.

NOTE: Transmit and receive data rates are independent of each other.

s. Transmit, Modulation. The MD-945 is a BPSK/QPSK modem using differential or convolution encoding. The transmit and receive sections of the MD-945 may use the same or different modulation technique.

t. Transmit, Encoding. Enter either coded or uncoded modulation depending on which is desired/required. The transmit and receive sections of the MD-945 may use the same or different encoding method.

u. Transmit, Surface Acoustic Wave (SAW) Filters. The SAW filters are used in conjunction with the MD-945 to limit the signal spectrum of the digitally modulated carrier. The 70-MHz modulated carrier from the MD-945 is routed through a SAW filter to compress the bandwidth and eliminate unwanted sidelobes. There are five transmit and nine receive filters in the AN/TSC-94A. In the AN/TSC-100A, the transmit and receive group each contains eight filters. Enter the assigned SAW filter number for each carrier.

v. Transmit, Power. The transmitter group in the AN/TSC-93B and AN/TSC-94A consists of redundant (i.e., one spare), 57.6 dBm (575 watts) high-power amplifiers (approximate power output). The AN/TSC-85B and AN/TSC-100A transmitter group consists of two 60.1 dBm (1,026 watts) high-power amplifiers. Enter the power requirements in dBm or watts. If the terminal type is an AN/TSC-100A, depending on the application, enter HPA 1 and HPA 2 power requirements.

w. Receive. Information concerning the receiver group is provided in the receive section of the sheet. The same considerations provided in the transmit section apply to the receive section. The transmit and receive sections are independent in that different rates or modulation scheme, etc., may be applicable.

24. TD-1337(V)/G TSSP Crew Assignment Sheet. The TD-1337 CAS (Figure A-D-25) is divided into three portions: Orderwire Configuration Routine, Local MUX Configuration Routine, and Remote MUX Minimum Configuration Routine.

a. Terminal Type. Enter the type of terminal (e.g., AN/TSC-94A) where the TD-1337 is located.

b. Terminal ID. Enter the terminal number (1-99) where the TD-1337 is located.

c. Terminal Location. Enter the location of the terminal.

d. Orderwire Configuration Routine. The orderwire portion of the worksheet shown in Figure A-D-25 is used to specify the orderwire configuration for the local TD-1337. Data elements are described in the following subparagraphs. See Appendix B to Enclosure A for a discussion of the digital voice orderwire.

e. TD-1337 Call Number. Enter the call number (1-16) for the local terminal and up to four remote terminals. (If the local terminal is an AN/TSC-93B or 94A, it can have only one remote terminal.) This call number will be called to ring the terminal on the digital voice orderwire network.

f. TD-1337 Terminal Number. Enter the terminal number (1 - 99) where the TD-1337 is located.

TERMINAL TYPE:	TERMINAL ID:	TERMINAL LOCATION:

ORDERWIRE CONFIGURATION ROUTINE

STATION		ITEM		LOCAL		REMOTES 1		REMOTES 2		REMOTES 3		REMOTES 4
TD-1337(V)/G	CALL NO											
	TERM NO											
	MODE	SECURE___ NONSECURE__	SECURE___ NONSECURE__	SECURE___ NONSECURE__	SECURE___ NONSECURE__	SECURE___ NONSECURE__	SECURE___ NONSECURE__	SECURE___ NONSECURE__	SECURE___ NONSECURE__	SECURE___ NONSECURE__	SECURE___ NONSECURE__	SECURE___ NONSECURE__
CNCE	CALL NO TERM NO											

LOCAL MUX CONFIGURATION ROUTINE — MEMORY 1 — MEMORY 2 ____

REMOTE MUX MINIMUM CONFIG. ROUTINE — MEMORY 1 ____ — MEMORY 2 ____

LOCAL MUX PORT	PORT RATES (Kbps)	PORT INTERFACE BAL	CDI	UNBAL	PORT OUTPUT DEMUX (LOCAL)	PORT (DISTANT)	EXTERNAL TIMING SOURCE	REMOTE MUX PORT	PORT RATES (Kbps) REMOTE MUX 1	REMOTE MUX 2	REMOTE MUX 3	REMOTE MUX 4
1								1				
2								2				
3								3				
4								4				
5								5				
6	√							6				
7	√							7				
8	√							8				

16 Kbps ORDERWIRE OPTION	YES ___ NO ___	16 Kbps ORDER-WIRE OPTION	YES ___ NO ___	YES ___ NO ___	YES ___ NO ___	YES ___ NO ___
16/32 Kbps USER OPTION	16 Kbps ___ 32 Kbps ___ NO ___	16/32 Kbps USER OPTION	16 Kbps ___ 32 Kbps ___ NO ___	16 Kbps ___ 32 Kbps ___ NO ___	16 Kbps ___ 32 Kbps ___ NO ___	16 Kbps ___ 32 Kbps ___ NO ___
16/32 Kbps USER DEMUX	DEMUX NO. ___					
TIMING SOURCE SELECTION	CNCE OR EXT STD ___ SLAVE ___ MASTER ___					
SLAVE TIMING SOURCE	DEMUX NO. ___	INDICATES NOT USED IN V3/V4 (AF) MODELS				
		■ INDICATES NOT USED IN V1/V2 (ARMY) MODELS				
CDI GROUP MODEM CABLE	NO. .25 MIL REELS ___	DISTANT TERMINAL LOCATION				
CESE TLM PATCH OPTION ■	PATCH LOCAL ___	REMOTE MUX 1				
CESE TELEMETRY EQUIP ID ■	EQUIPMENT ID ___	REMOTE MUX 2				
TD-754 MUX OPTION	PORT 5 ___	REMOTE MUX 3				
TD-754 DEMUX OPTION	PORT 1 ___	REMOTE MUX 4				

Pg. of

Figure A-D-25. TD-1337 (V)/G TSSP, Crew Assignment Sheet

g. TD-1337 Mode. Check SECURE or NONSECURE, depending on the configuration of the orderwire. The nonsecure mode is only compatible with another TG-1337.

h. CNCE Call Number. Enter the DVOW ring code (1-16) for the local CNCE and up to four remote CNCEs.

i. CNCE Terminal Number. Enter the equipment ID of the CNCE (i.e., CNCnn).

j. Local MUX Configuration Routine. The local MUX configuration portion of the worksheet shown in Figure A-D-25 is used to define the configuration of the local multiplex equipment.

k. Memory 1, Memory 2. Enter a check beside the number of the memory in which the data should be entered. The TD-1337 has two memories. Normally, one is online and the second is available to enter a new configuration.

l. Port Rate in Kbps. Enter the port rate in Kbps. For ports that are not in use, enter zero. Allowable port rates are shown in Figures D-A-A-4 for the AN/TSC-100A, D-A-A-5 for the AN/TSC-94A, D-A-A-6 for the AN/TSC-85B, and D-A-A-7 for the AN/TSC-93B. If a port rate of 1,024 or 1,152 Kbps is used, entry must be on an odd numbered port and the next port is not available for use.

m. Port Interface. Place a check beside the type of interface (balanced NRZ, conditioned diphase, or unbalanced NRZ) to be used for each local port. Balanced interfaces are used with the MD-1026 GM or the TD-1389 LRM. Conditioned diphase interfaces are used with the single conditioned diphase port. See Figures D-A-A-4 through D-A-A-7 for allowable interfaces in the AN/TSC-100A, -94A, -85B, and -93B respectively. Ports 6, 7, or 8 must have balanced interfaces. Check marks are preprinted in these blocks.

n. Port Output, DEMUX (Local Terminal). For each local MUX port, enter the number of the local DEMUX that corresponds to the distant terminal. The TD-1337s in the AN/TSC-100A and -85B have four DEMUXS, and the TD-1337s in the AN/TSC-94A and -93B have one DEMUX. This entry selects which local DEMUX is associated with the local MUX port.

o. Port Output, Port (Distant). For each local MUX port, enter the distant end port number to which the group will be connected at the distant TD-1337. If the distant terminal is an AN/TSC-94A or AN/TSC-93B, the port number can be 1 or 2. If the distant terminal is an AN/TSC-100A or AN/TSC-85B, the port number can be 1 through 8. This entry identifies which group will be extracted from the received supergroup and routed to the distant DEMUX port.

NOTE: Each entry in this column must be the same as the local MUX port entry for the corresponding terminal at the opposite end of the link.

p. External Timing Source. If an external timing source is to be used, enter YES beside the number of the port for the group. Enter NO if the group will not be used for timing. Only one group should be selected for timing. If the entry for timing source selection (subparagraph 24t) was SLAVE or MASTER, all entries in this column should be NO.

q. 16-Kbps Orderwire Option. Check YES or NO. Normally, the 16-Kbps orderwire option will be used.

r. 16-/-32 Kbps User Option. This option enables data from a dedicated user to be included in the multiplexed output supergroup. Check "16 Kbps," 32 Kbps," or "NO." The normal entry is "NO." There are no plans to use this option.

s. 16-/-32 Kbps User DEMUX. If the 16-/-32 Kbps user option is used, enter the DEMUX number of the DEMUX which contains data from the distant 16-/-32 Kbps user. Otherwise, leave this entry blank.

t. Timing Source Selection. Check "CNCE" or EXTERNAL STANDARD" (timing is derived from a group input), "SLAVE" (TD-1337 is slaved to a remote TD-1337 over the supergroup), or "MASTER" (TD-1337 operates from an internal timing source) depending on the timing configuration for the local terminal. (See Appendix C to Enclosure A for guidance on timing).

u. Slave Timing Source. If the local terminal is to be slaved to a distant terminal, enter the number of the DEMUX which receives the supergroup containing timing from the distant terminal. If the timing source selection was master or CNCE or external standard, leave this entry blank.

v. Conditioned Diphase Group Modem Cable. If the conditioned diphase port on the TD-1337 is used, enter the number of 0.25-mile reels of CX-11230 cable connected to the port. This number cannot exceed eight for data rates up to 576 Kbps or four for data rates of 1,024 and 1,152 Kbps.

w. CESE TLM Patch Option. The local GMF SATCOM terminal cannot send both the local CESE data stream and the one remote CESE data stream simultaneously to the CNCE. Select either "PATCH LOCAL" if the local CESE data is to be sent to the CNCE or "PATCH DEMUX 1" if the one remote CESE data stream is to be sent to the CNCE. This entry is only available on the AN/TSC-94A and AN/TSC-100A.

x. CESE Telemetry Equip ID. Enter the CESE telemetry equipment identification number assigned to this terminal. This item applies only to the AN/TSC-94A and AN/TSC-100A. For the AN/TSC-94A, enter F followed by a two-digit numeric (00-99); for the AN/TSC-100A, enter E followed by a two-digit number (00-99).

y. TD-754 MUX Option. Leave blank.

z. TD-754 DEMUX Option. Leave blank.

aa. Remote MUX Minimum Configuration Routine. The RMUX minimum configuration routine portion of the worksheet shown in Figure A-D-25 is used to define the configuration of each incoming supergroup that is applied to a remote multiplexer. The data-rate entries in each column for a remote multiplexer should correspond to the data rate entries for the local multiplex ports at the distant terminal.

bb. Memory. Check MEMORY 1 or MEMORY 2.

cc. Port Rates. For each distant terminal, enter the data rate in Kbps for each multiplex port at that terminal. The AN/TSC-100A or AN/TSC-85B can have up to four distant terminals (shown as Remote MUXs on the worksheet), while the AN/TSC-94A or AN/TSC-93B can have only one.

dd. 16-Kbps Orderwire Option. For each distant terminal, if the 16-Kbps orderwire option is used, check YES. if not, check NO. (The 16-Kbps orderwire option is normally used.)

ee. 16-/-32 Kbps User Option. For each distant terminal, check 16 Kbps, 32-Kbps, or NO depending on the use of the 16-/-32-Kbps user option. As there are no current plans to use this option, the appropriate entry is currently NO.

ff. Distant Terminal Location. Enter the terminal location(s) associated with each remote MUX configured in the remote MUX minimum configuration routine.

25. TD-1337(V)/G TSSP RMUX Configuration for Downloading Crew Assignment Sheet. A nodal terminal can enter a remote multiplex configuration for downloading and transmit the configuration to the nonnodal terminal by using a down load to nonnodal command. This passes all data necessary to reconfigure the local MUX and DEMUX of the nonnodal terminal. A nodal terminal can act as a nonnodal terminal. (See Figure A-D-26.)

a. Local and Remote Terminal Type, Terminal ID, and Terminal Location. Enter the terminal type, terminal ID (1-99), and terminal location for both the local terminal and the remote terminal that will be reconfigured.

b. Remote MUX Number. Enter the number of the DEMUX (1-4) in the local terminal that corresponds to the remote MUX in the distant terminal that is to be reconfigured. This entry applies to the local TD-1337. All subsequent entries apply to the distant TD-1337.

c. Memory. Place a check beside the MEMORY (1 or 2) that is to be configured. (This entry applies to the memory at the local terminal.)

d. Port Rates in Kbps. Enter the data rate for each port that is in use at the distant terminal. Allowable port rates are shown in Figures D-A-A-4 through D-A-A-7. If a port rate of 1,024 or 1,152 Kbps is used, the entry must be an odd-numbered port, and the next even-numbered port is not available for use.

e. Port Interface. Place a check beside the type of interface (balanced NRZ, conditioned diphase, or unbalanced NRZ) to be used for each local port. Balanced interfaces are used with the MD-1026 GM or TD-1389 LRM, conditioned diphase interfaces with the single-conditioned diphase interface port, and unbalanced NRZ interfaces with the TD-660s. Ports 6, 7, and 8 can only use balanced interfaces. Check marks are preprinted in the balanced blocks beside these ports.

	TERMINAL TYPE	TERMINAL ID	TERMINAL LOCATION
LOCAL			
REMOTE			

REMOTE MUX CONFIGURATION FOR DOWNLOADING ROUTINE

REMOTE MUX NO. _____ MEMORY 1 _____ MEMORY 2 _____

REMOTE MUX PORT	PORT RATE (Kbps)	PORT INTERFACE			PORT OUTPUT		EXTERNAL TIMING SOURCE
		BAL	CDI	UNBAL ▲	DEMUX (LOCAL)	PORT (DISTANT)	
1							
2							
3							
4							
5							
6		✔					
7		✔					
8		✔					

16 Kbps ORDERWIRE OPTION	YES ____ NO ____
16/32 USER OPTION	16 Kbps ____ 32 Kbps ____ NO ____
16/32 Kbps USER DEMUX	DEMUX NO ____
TIMING SOURCE SELECTION	CNCE OR EXT STD ____ SLAVE ____ MASTER ____
SLAVE TIMING SOURCE	DEMUX ____
CDI GROUP MODEM CABLE	NO. .26 MILE REELS ____
CESE TLM PATCH OPTION ■	PATCH LOCAL ____ PATCG DENYX 1 ____
CESE TELEMETRY DQUIP ID ■	EQUIPMENT ID ____
TD-754 MUX OPTION ▲	PORT 5 ____ PORT 7 ____
TD-754 DEMUX OPTION ▲	PORT 1 ____ PORT 3 ____
• INDICATES NOT USED IN V3/V4 (AF) MODELS ■ INDICATES NOT USED IN V1/V2 (ARMY) MODELS.	

Pg. of

Figure A-D-26. TD-1337 (V)/G TSSP RMUX Configuration for Downloading Crew Assignment Sheet

f. Port Output, DEMUX (Local). For each local MUX port, enter the local DEMUX number that corresponds to the distant terminal. The TD-1337s in the AN/TSC-100A and -85B have four DEMUXs, and the TD-1337s in the AN/TSC-94A and AN/TSC-93B have one DEMUX.

g. Port Output, Port (Distant). For each local MUX port, enter the port number to be input to the TD-1337 at the distant terminal. If the distant terminal is an AN/TSC-100A or an AN/TSC-85B, the port number can be 1 through 8.

h. External Timing Source. For each local port enter YES if the group is used as an external timing source or NO if the group will not be used as an external timing source.

i. 16-Kbps Orderwire Option. Check YES or NO. Normally, the 16 Kbps orderwire option will be used.

j. 16-/-32 Kbps User Option. Check 16 Kbps, 32 Kbps, or NO. There are no present plans to use this option.

k. 16-/-32 Kbps User DEMUX. If this user option is to be used, enter the DEMUX number of the DEMUX associated with the distant 16- or 32-Kbps user.

l. Timing Source Selection. Check CNCE or EXTERNAL STANDARD, SLAVE, or MASTER depending on the timing configuration for the terminal.

m. Slave Timing Source. If the terminal is to be slaved to a distant terminal, enter the number of the DEMUX that receives the supergroup containing timing from the distant terminal. If the timing source selection was MASTER or CNCE or EXTERNAL STANDARD, leave this entry blank.

n. Conditioned Diphase Group Modem Cable. If the conditioned diphase port on the TD-1337 is used, enter the number of 0.25-mile reels of CX-11230 cable connected to the port. This number cannot exceed eight for data rates up to 576 Kbps and cannot exceed four for data rates of 1,152 Kbps.

o. CESE TLM Patch Option. The local GMF SATCOM terminal cannot send both the local CESE data stream and the one remote CESE data stream simultaneously to the CNCE. Select either PATCH LOCAL if the local CESE data is to be sent to the CNCE or PATCH.

p. CESE Telemetry Equip ID. Enter the CESE telemetry equipment identification number assigned to this terminal. This item applies only to the AN/TSC-94A and AN/TSC-100A. For the AN/TSC-94A, enter F followed by a two-digit numeric (00-99); for the AN/TSC-100A, enter E, followed by a two-digit numeric (00-99).

q. TD-754 MUX Option. Leave blank.

r. TD-754 DEMUX Option. Leave blank.

26. TD-1389 LRM Crew Assignment Sheet. The TD-1389 LRM sheet (Figure A-D-27) provides a means for specifying line (user side) composite interfaces and data-rate timing options. In addition, the LRM system mode is specified. The sheet is divided in to four major sections (1) System Configuration, (2) Composite Multiplex/Demultiplex, (3) Line Multiplex and Demultiplex, and (4) Composite Interface. The line card complement is physically configured to suit specified applications and interfaces. The most common LRM version (V)2, used in the GMF Phase II satellite terminals, is populated with three digital, six continuously variable slope delta (CVSD), and three frequency shift keying (FSK) line cards. All configuration options are processor controlled and selected by an alphanumeric keypad entry. To the best extent possible, information on the form follows the programming sequence of the LRM. Except for the data rates and mark and space frequencies, all data entry options are provided on the form.

NOTE: Some data entry options may not be applicable to the system mode selected. For example, if the GM system mode is selected, the timing option entry is not required. Furthermore, the composite multiplex interface options are limited to only CDϕ BAL and CDϕ UNBAL. Applicable options, given the system mode selected, will be provided in the discussion for each data entry.

a. LRM Number. Enter the LRM number.

b. Assemblage. Enter the assemblage where the LRM is installed.

c. Location. Enter the physical location of the assemblage. This data entry may also be used to enter the communications system or link designator.

LRM:	ASSEMBLAGE: LOCATION:		
	TIMING MODE:	COMSEC: YES ____ NO_____	REMOTE CH RATE :
1. LRM 2. LGM 3. GSC-24 4. RATE PASS 5. GM	1. 4 MHz INTERNAL 2. 5 MHz EXTERNAL 3. COMP RX INTERNAL 4. COMP TX EXTERNAL 5. CHANNEL 2 RECEIVE	1. KG-81/94: 2. KG-84: RESYNC OPTION: 1. NA 2. 500 ms DELAY 3. EXTERNAL SYNC INHIBIT	COMP. LOOPBACK : EMERGENCY BYPASS: SATELLITE BUFFER DELAY:

COMPOSITE MUX	COMPOSITE DEMUX	COMPOSITE MUX/DEMUX OPTIONS		
		INTERFACE	POLARITY	DATA RATE
INTERFACE: ___ POLARITY: ___ DATA RATE: ___ * Kbps RATE: ___	INTERFACE: ___ POLARITY: ___ DATA RATE: ___ * Kbps RATE: ___	1. CDϕ UNBAL (T-T) 2. CDϕ BAL 3. NRZ BAL 4. NRZ UNBAL 5. NRZ BAL (T-T)	1. D+C+ 2. D-C+ 3. D+C- 4. D-C-	1. SPECIFIED RATE 2. MAX EFFICIENCY 3. FIXED RESOLUTION

LINE NUMBER		1	2	3	4	5	6	7	8	9	10	11	12	OPTIONS
SIGNAL INTERFACE	DIGITAL													1. DIGITAL 3. FSK 2. CVSD 4. NA
														1. NRZ BAL 2. NRZ UNBAL 3. CDI BAL
TIMING OPTIONS	DIGITAL FSK *													1. EXT CLK 4. DMD CLK 2. INT CLK * 5. S/S* 3. RCV CLK* 6. TR ENC*
STUFF/DELET	DIGITAL FSK													1. INHIBIT 2. ENABLE
DATA/CLOCK POLARITY	DIGITAL FSK *													1. D+C+ 2. D-C+ 3. D+C- 4. D-C- 5. D+* 6. D-
DATA LENGTH	DIGITAL FSK													5, 6, 7, 8, BITS
STOP LENGTH	DIGITAL FSK													1, 1.42, 1.5, 2 BITS
DATA RATE	DIGITAL CVSD FSK													CVSD (Kbps) OPTIONS. 16, 19.2, 32, 38.4 FSK/DIG.
MUX LEVEL	CVSD													-20, -10, 0, +3 dB
DEMUX LEVEL	CVSD FSK *													-3, 0, +10, +20 dB -15, -12, -9, -6, -3, 0 +3, +6 dB
MARK FREQUENCY	FSK													MARK SPACE FREQUENCIES ARE DATA RATE DEPENDENT.
SPACE FREQUENCY	FSK													
LOOPBACK	DIGITAL CVSD FSK													1. ENABLE 2. DISABLE

LRM COMPOSITE INTERFACE	Notes:
KG-81/94: CX-11230: TSSP: PORT: _____ LEV CONV: _____	

Figure A-D-27. TD-1389 LRM Crew Assignment Sheet

d. System Configuration. The system configuration section consists of LRM system and timing modes, COMSEC requirements, and other information. Data elements are described in the following sub-paragraphs.

e. System Mode. There are five LRM operating modes. Enter the number corresponding to the mode selected.

f. Timing Mode. The timing mode options are dependent upon the LRM system mode selected. In the LRM, GSC-24, and LGM system modes, any of the five timing modes may be selected. There is no timing mode for the GM and rate pass system modes. In the rate pass mode, line timing options (external clock, recovered clock, demand clock, start/stop, and transition encoded) are available and will be discussed later. Enter the number corresponding to the timing mode selected.

g. COMSEC Requirements. Either the KG-81/94 TED or KG-84(V) may be interfaced to the LRM composite side. In the LRM system mode, either piece of COMSEC may be selected. In the LGM system mode, only the KG-81/94 may be selected. There is no COMSEC option available for the GSC-24, GM, or rate pass system modes. If COMSEC is required, check the YES option. Alternatively, if COMSEC is not required, check the NO option. If either COMSEC option is selected, then the appropriate resync option must be entered. Selecting the 500-ms delay option inhibits the resync achieved by the KG-81/-94 to LRM interface and therefore should not be used if automatic (LRM to TED interface wiring exists) crypto resynchronization is desired. Select the external sync inhibit if automatic resync is desired. Enter the number corresponding to the resync option selected.

h. Remote Channel Rate. The LRM may be programmed by a remote terminal (RS-449 unbalanced interface). If the LRM is programmed for a remote control option, enter the data rate of this interface (150, 300, 600, 1,200, 2,400, 4,800, 7,200, or 9,600 Kbps). Otherwise, enter an N/A option. The N/A option is the most commonly used in the GMF Phase II Satellite Terminals.

i. Composite Loopback. Enter either "ENABLE" or DISABLE. If ENABLE is selected, the LRM composite signal is looped back to the sender.

j. Emergency Bypass. This feature is a special case of the rate pass system mode. The LRM processor establishes line number one as the composite signal channel or single path through the unit using a 75-baud rate. This option is available only when operating in the LRM system mode. If this function is enabled, the LRM will automatically switch to the emergency bypass mode when the composite interface becomes less than 100 Kbps. Depending on function desired, enter ENABLE or DISABLE.

k. Satellite Buffer Delay. Typically used in only the (V)4 version of the LRM, the satellite buffer module is used in place of the composite modem module. The buffer card provides a programmable length FIFO with a range of 0 to 16,384 bits. This data entry is required only when operating in the LRM or GSC-24 system modes. If applicable, enter the selected bit delay.

l. Composite MUX/DEMUX. The composite MUX/DEMUX section consists of interface, clock and data polarity relationships, and data-rate information. Data elements are described in the following subparagraphs.

m. Composite, Interface. Any of the five interface options may be selected in the LRM, LGM, and rate pass system modes. Only NRZ BAL or NRZ UNBAL options may be selected in the GM and GSC-24 system modes. Enter the number corresponding to the interface option selected.

NOTE: The MD-1026 GM equipment side interface is balanced NRZ. A typical group input to the TD-1337 TSSP is also balanced NRZ.

n. Composite, Polarity. Clock and data polarity changes are possible in any LRM system mode. The typical option selected for most applications is D+ C+. This polarity option specifies that the data will not be inverted and will be clocked by the leading (rising) edge. Enter the number corresponding to the clock and data relationship selected.

o. Composite, Data Rate. There are three data-rate options. The specified rate option may be used in any LRM system mode. If selected, the specified rate must be defined in . Table A-D-16 provides a listing of the allowable composite multiplex and demultiplex rates when operating in the LRM and GM system modes. Table A-D-17 provides a listing of the allowable rates when operating in the AN/GSC-24 system mode. Composite rates of 128 Kbps and 256 Kbps are allowable when operating in the LGM system mode. Note that the LGM composite rates correspond

Table A-D-16. LRM and GM Composite and Demultiplex Rates

50 bps	8.0	56.0	128.0	200.0
75	9.6	64.0	136.0	208.0
100	16.0	72.0	144.0	216.0
110	19.2	76.8	152.0	224.0
150	24.0	80.0	153.6	232.0
300	32.0	88.0	160.0	240.0
600	38.4	96.0	168.0	248.0
1200	40.0	104.0	176.0	256.0
2.4 Kbps	48.0	112.0	184.0	
4.8	50.0	120.0	192.0	

to the user or line data rates of 16 Kbps and 32 Kbps, respectively. Table D-18 provides a listing of the allowable composite rate when operating in the rate pass system mode. If the maximum efficiency option is selected, the LRM will automatically establish the lowest possible composite rate after summing the line data rates and adding its overhead to this sum. The maximum efficiency option may be used only in the LRM system mode. If the fixed resolution option is selected, the LRM will automatically establish the maximum rate at 32 Kbps.

p. Line Multiplex and Demultiplex. Data elements in the line multiplex/demultiplex section define a wide range of line data rates, formats, interface, clock options, and other parameter information. Changes in type and/or quantity of line cards may be necessary because of operational requirements. The LRM is capable of accommodating up to 12 line channels (line numbers 1-12). The various line card interface options are provided in the left column. Some data entry options are not available or required for all line cards. For example, timing option choices depend on the line card selected (e.g., digital vs. FSK). Data entry selections are entered in the space provided for each line number. In accordance with the programming sequence of the LRM, line multiplex options are entered followed by the line demultiplex options. If the multiplex option is the same as the demultiplex options selected, only

Table A-D-17. AN/GSC-24 Mode Composite Rates (Kbps)

9,600	74,400	18,600	4,650	1162.5	290.625
240,000	74,000	18,000	4,500	1125	281.25
230,400	69,600	17,400	4,350	1087.5	271.875
220,800	67,200	16,800	4,200	1050	262.5
211,200	64,800	16,200	4,050	1012.5	253.125
201,600	62,400	15,600	3,900	975	243.75
192,000	60,000	15,000	3,750	937.5	234.375
182,400	57,600	14,400	3,600	900	225
172,800	55,200	13,800	3,450	825	215.625
163,200	52,800	13,200	3,300	862.5	206.25
153,600	50,400	12,600	3,150	787.5	196.875
148,800	48,000	12,000	3,000	750	187.5
144,000	45,600	11,400	2,850	712.5	178.125
139,200	43,200	10,800	2,700	675	168.75
134,400	40,800	10,200	2,550	637.5	159.375
129,600	38,400	9,600	2,400	600	150
124,800	37,200	9,300	2,325	581.25	
120,000	36,000	9,000	2,250	562.5	
115,200	34,800	8,700	2,175	543.75	
110,400	33,600	8,400	2,100	525	
105,600	32,400	8,000	2,025	506.25	
100,800	31,200	7,800	1,950	487.5	
96,000	30,000	7,500	1,875	468.75	
91,200	28,800	7,200	1,800	450	
86,400	27,600	6,900	1,725	431.25	
81,600	26,400	6,600	1,650	412.5	
76,800	25,200	6,300	1,575	393.75	
	24,000	6,000	1,500	375	
	22,800	5,700	1,425	366.25	
	21,600	5,400	1,350	337.5	
	20,400	5,100	1,275	318.75	
	19,200	4,800	1,200	300	

Table A-D-18. LRM Rate Pass System Mode Data Rates

35 bps	100 bps	9.6 Kbps
37.5 bps	110 bps	16.0 Kbps
44.5 bps	150 bps	19.2 Kbps
45 bps	300 bps	32.0 Kbps
45.45 bps	600 bps	38.4 Kbps
50 bps	1.2 Kbps	50.0 Kbps
56.8 bps	2.4 Kbps	56.0 Kbps
61.12 bps	4.8 Kbps	
74 bps	7.2 Kbps	
75 bps	8.0 Kbps	

enter the number corresponding to the option selected. If the multiplex and demultiplex options are different, put a diagonal line through the box. Enter the multiplex option above the line and the demultiplex option below the line. This notation technique, if used, should be explained in the notes. If the fixed resolution option is selected, the LRM will automatically establish the maximum rate at 32 Kbps.

q. Interface Options, Type Line. Enter the number corresponding to the type line card selected. If desired, any line number may be skipped. In this case, the N/A option should be selected. If a digital line card was selected, go to subparagraph 26r below. If an FSK card was selected, go to subparagraph 26s below. If a CVSD card was selected, go to subparagraph 26x below.

r. Signal Interface, Digital. If a digital line card is selected, then one of the three signal interface options must be selected. Enter the number corresponding to the option selected.

s. Timing Options, Digital and FSK. Except for internal clock, any of the six timing options may be used with a digital line card multiplex configuration. Only options 2, 4, 5, and 6 may be used with a digital line card demultiplex configuration. Options that have an asterisk may be used with an FSK card. Note that option 3 can only be used in the FSK multiplex configuration while option 2 can only be used in the FSK demultiplex configuration. The typical digital link MUX/DEMUX options for a KY-68 DSVT are for MUX, select option 3 (recovered) and for DEMUX, select option 2 (internal). The typical FSK line MUX/DEMUX options for a Frederick 1280A modem are for mode II async, select option

5 and for mode I, select option 3 (recovered) for MUX, and option 2 (internal) for DEMUX.

t. Stuff/Delete, Digital, and FSK. The LRM incorporates a bit stuff/delete scheme to accommodate line interfaces that do not share a common timing source. Line interfaces that share timing from the LRM should select the inhibit option.

u. Data and Clock Polarity, Digital, and FSK. Data and clock polarity changes are possible for the digital MUX/DEMUX line configuration. The typical option selected for most applications is D+ C+. This polarity option specifies that the data will not be inverted and will be clocked by the leading (rising) edge. If an FSK line card is selected, D+ refers to mark high and D- to mark low.

v. Data Length, Digital and FSK. If the timing options in subparagraph s above were start and stop, then the appropriate stop length must be provided. Enter the actual stop length number.

w. Stop Length, Digital and FSK. The CVSD data-rate options are provided on the LRM sheet. Data-rate options for the digital and FSK line cards are dependent upon the timing option selected and the mark and space frequencies used. Table A-D-19 provides a listing of the allowable data rates when using a digital line or FSK card.

x. Data Rate Digital, CVSD, and FSK. The CVSD data-rate options are provided on the LRM sheet. Data-rate options are dependent upon the timing option selected and the mark and space frequencies used. Table A-D-19 provides a listing of the allowable data rates.

y. MUX Level, CVSD. Similar to the encode setting used on the DGM AAU circuit card, the multiplex level options are provided on the LRM sheet. Depending on selection, the input analog signal will be unchanged, amplified, or attenuated before CVSD processing (A/D conversion). Rules applied to using the LRM CVSD multiplex level are the same as the DGM AAU encode setting. Enter the level setting required to interface with the A/D converter at -17 dBm. Note this is only a line multiplex data entry.

z. DEMUX Level, CVSD and FSK. If the CVSD line card is used, then the demultiplex level setting should be such that there is a 0-dB circuit gain in the system. For example, if in subparagraph 26y above a -10-dB level was selected, then a +10-dB level should be selected for the

Table A-D-19. Digital and FSK Line Card Data Rates

35 bps	100 bps	9.6 Kbps
37.5 bps	110 bps	16.0 Kbps
44.5 bps	150 bps	19.2 Kbps
45 bps	300 bps	32.0 Kbps
45.45 bps	600 bps	38.4 Kbps
50 bps	1.2 Kbps	50.0 Kbps
56.8 bps	2.4 Kbps	56.0 Kbps
61.12 bps	4.8 Kbps	
74 bps	7.2 Kbps	
75 bps	8.0 Kbps	

demultiplex level. Rules applied to using the LRM CVSD demultiplex level are the same as using the DGM AAU decode setting. If an FSK line card is used, the demultiplex level setting is the audio output level in dBm. The FSK demultiplex level options are noted by an asterisk on the LRM sheet.

aa. Mark and Space Frequencies, FSK. If an FSK line card is used, the appropriate mark and space frequencies must be entered. Table A-D-20 provides a listing of the allowable FSK mark and space frequencies.

bb. Loopback Digital, CVSD and FSK. Enter either ENABLE or DISABLE for a line loopback. If ENABLE is selected, the LRM line card input signal is looped back to the sender.

cc. LRM Composite Interface. This final section consists of interface options for the LRM and a NOTES area.

dd. LRM Composite Interface. In the GMF Phase II Satellite Terminals, typical LRM interface options are provided. If a different option is applicable, the notes area may be used to convey this type of information.

ee. Notes. The notes area can be used to convey any information that a planner may wish to pass on. For example, a note specifying the LRM programming selection could be entered (online or offline memory).

Table A-D-20. FSK Mark/Space Frequencies (Hz)

List A 1/, 2/		List B 1/	
382.5/467.5	1742.5/1827.5	1200	2400
552.5/637.5	1912.5/1997.5	1300	1700
722.5/807.5	2082.5/2167.5	1300	2100
892.5/977.5	2252.5/2337.5		
1062.5/1147.5	2422.5/2507.5		
1232.5/1317.5	2592.5/2677.5		
1402.5/1487.5	2762.5/2847.5		
1572.5/1657.5	2932.5/3017.5		

1/ For RECOVER CLK, use Lists A and B.
2/ For START STOP or TRANS ENC, use List A only.

27. AJCM Crew Assignment Sheet. This sheet is used to provide the information required to configure the AJ modem for operation. (See Figure A-D-28.) The sheet is formatted to provide the terminal operator with the information necessary to acquire the critical control circuit (CCC) and the link communications circuit (LCC) using the primary acquisition modes discussed in Annex F to Appendix A to Enclosure D. The sheet is divided into four major sections: terminal identification, beacon acquisition, CCC acquisition, and LCC acquisition.

a. Terminal Identification

(1) Terminal Type. Enter the terminal type (AN/TSC-93B, AN/TSC-100A, etc.) where the AJCM is located.

(2) Terminal ID. Enter the three-digit code (005-127) identifying the GMF terminal where the AJCM is located.

(3) Terminal Location. Enter the physical location of the terminal.

b. Beacon (BCN) Acquisition

(1) BCN NO/YES. This entry is a switch setting on the Acquisition Field of the MD-1131 CM. Enter YES if the satellite beacon is to be acquired and used to aid in the acquisition of the CCC, otherwise enter NO. Normally, the satellite beacon is used in the acquisition process.

TERMINAL TYPE:	TERMINAL ID:	TERMINAL LOCATION:
BEACON (BCN) ACQUISITION		
* BEACON (BCN) NO/YES:	*BCN: A(EC)— B(NC)—	A (EC) FREQUENCY: B (NC) FREQUENCY:

CRITICAL CONTROL CIRUCIT (CCC) ACQUISITION (BEACON AIDED)				
*NCT NO/YES:	NCT ID:	RX FREQUENCY:		TX FREQUENCY:
ALTITUDE: _ _. _ _ KM		LATITUDE: __.___ DEG		LONGITUDE :__.___ DEG
CODE-OF-MISSION		YEAR/DATE _ _ / _ _ _	TIME _ _ : _ _ :	TRANSEC IN/OUT:

COMMUNICATIONS (COMM) LINK ACQUISITION (CCC AIDED)				
	COMM 1	COMM 2	COMM 3	COMM 4
* COMM NO/YES				
RX FREQUENCY				
TRANSEC IN/OUT				
LINK ID				
TRANSMIT				
RECEIVE				
DATA RATE				
MINIMUM RATE (75 bps)				
NORMAL RATE (UP TO 3 Kbps)				
HIGH RATE (UP TO 32 Kbps)				
USER BASEBAND INTERFACE				
* NRZ/TTY/CDI				
* BAL/UNBAL				
BUFFERS IN/OUT				
SPECIAL INSTRUCTIONS:				

* DENOTES A SWITCH SETTING ON THE FRONT PANEL OF THE MD-1131 OR MD-1132

Figure A-D-28. AJ Control Modem Crew Assignment Sheet

(2) BCN A (EC)/B (Narrow Coverage). This entry is a switch setting on the Acquisition Field of the MD-1131 CM. It is used to select the satellite beacon used in the acquisition process. Check A (EC) if the earth coverage (EC) beacon is to be used or B (narrow coverage) if the narrow coverage beacon is to be used.

(3) A (EC)/B (Narrow Coverage) Frequency. Enter the carrier frequency for the beacon selected in subparagraph 27b(2) above.

c. CCC Acquisition (Beacon Aided)

(1) NCT NO/YES. This entry is a switch setting on the Acquisition Field of the MD-1131 CM. It is used to configure the CM for acquisition of the NCT CCC transmission signal. The normal entry for this block is YES.

(2) NCT ID. Enter a single digit (1-4) for the NCT ID. The NCT ID is entered by setting dip switches internal to the MD-1131 CM. The switch settings must be made prior to powering up the modem.

(3) CCC, Receive Frequency. Enter the receive frequency (in MHz) for the CCC. The operator enters the frequency using the Interface Control Unit (ICU) on the front panel of the MD-1131 CM. Note that one of the GMF terminal downconverters must be dedicated to the CCC receive frequency.

(4) CCC, Transmit Frequency. Enter the CCC transmit frequency (in MHz). The frequency is entered through the ICU.

(5) Altitude. Enter the altitude (in kilometers) at which the terminal will be located. Data are entered by the ICU.

(6) Latitude and Longitude. Enter the latitude and longitude of the physical location of the GMF terminal. Note that this entry must be in decimal degrees and seconds; for Example: latitude 60.375 longitude 103.170°.

(7) Code-of-Mission (COM). Enter the seven-digit COM from the appropriate page of the beacon code book. The COM defines the times at which the timing information contained in the beacon signal begins to repeat and assigns a seven-digit number that is used to identify each beacon timing period. Table A-D-21 represents an example of a beacon code book page.

(8) Year/Day. Enter five-digit number for the Julian date associated with the COM; Example, use 99/032 for 1 February 1999. These data are found in the beacon code book.

(9) Time. Enter the time in hours, minutes, and seconds associated with the COM. These data are found in the beacon code book.

(10) TRANSEC In/Out. Enter IN if the KBF-9s are to be used to provide transmission security; otherwise, enter OUT.

d. COMM Link Acquisition (CCC Aided). These entries are used by the planner to provide information required by the terminal operator to establish the COMM links once the CCC has been acquired.

(1) COMM 1 NO/YES. This entry is a switch setting on the COMM field of the NM-1131 CM. Enter YES if COMM 1 is to be acquired; otherwise, enter NO. The normal entry is YES.

(2) COMM 2-4 NO/YES. This entry applies only to NT modems. This entry is a switch setting on the COMM fields of the MD-1132 COMM unit. Enter YES if COMM 2-4 are to be acquired; otherwise, enter NO.

(3) RX Frequency. Enter the receive frequency, in MHz, for each of the COMM links to be established.

(4) TRANSEC In/Out. Enter IN if the KVG-9s are to provide transmission security for the COMM link; otherwise, enter OUT.

(5) Link Identification (ID) Transmit and Receive. Enter the three-digit transmit and receive link ID numbers.

(6) Data Rate. Enter the data rate to be used on each COMM link to support the users. Note that all COMM links are initially established with a data rate of 75 Kbps. Once the link is established, the data rate can be changed to the rate listed on the CAS.

(7) User Baseband Data Input/Output Interface. User baseband interfaces are set by two switches (one pair of switches per COMM link) located on the COMM fields of the MD-1131 CM and MD-1132 COMM units.

(a) NRZ/TTY/CDI. Enter the type of interface required: NRZ, CDI, or TTY. Note, if TTY interface is selected, the user data rate must be 75 Kbps. Additionally, selection of the TTY interface limits the number of user circuits per COMM link to one.

Table A-D-21. Example Beacon Code Book Page

IRON 9475	DSCS III	WLANT	February 1984
Calendar Date	Julian Date	Time (Zulu)	Code-of-Mission
1	32		0073226
2	33	0027	0073227
3	34		
4	35	0623	0073228
5	36		
6	37	1220	0073229
7	38		
8	39	1816	0073230
9	40		
10	41		
11	42	0012	0073231
12	43		
13	44	0609	0073232
14	45		
15	46	1206	0073233
16	47		
17	48	1802	0073234
18	49		
19	50	2458	0073235
20	51		
21	52		
22	53	0555	0073236
23	54		
24	55	1152	0073237
25	56		
26	57	1748	0073238
27	58		
28	59	2444	0073239

(b) Balanced/Unbalanced. Enter whether the interface is to be balanced or unbalanced.

(8) Buffer In/Out. This entry is a switch setting on the COMM fields of the MD-1131 CM and MD-1132 COMM unit. The buffer IN position places a 1-24 bit buffer in the link when the CDϕ user interface is used. Enter IN if the user interface is CDϕ; otherwise, enter OUT.

28. RT-1462U/TRC-170, TSSR Crew Assignment Sheet. The TSSR sheet (Figure A-D-29) is used to convey the configuration of TSSR peculiar items to the crew that sets up and operates the terminal. Note that some entries have blocks for both the local (assigned) terminal and the remote terminal. This procedure provides insight for the crew of the local terminal into the configuration of the remote terminal.

a. TSSR Number. Enter the TSSR number.

b. Assigned or Remote Terminal Locations. Enter the physical locations of each terminal accordingly.

c. Remote Path Distance. Specify the distance from the antenna of the local terminal to the antenna of the remote terminal.

d. Transmitting Data, Frequency Control. Enter either INT or EXT for the dip switches. Selection of internal enables the five internal frequency select switches in the transmitter synthesizer module. This entry is the normal frequency setup. Selection of external enables thumbwheel switches on the front panel of the synthesizer module. The thumbwheel switches are used to select up to 100 preset frequencies programmed with plug-in PROMS.

e. Transmitting Data Primary Frequency. Enter the transmitter frequency in MHz.

f. Transmitting Data, Alternate Frequency. If an alternate frequency to the primary frequency has been assigned, enter the frequency in MHz.

g. Receiving Data, Primary Frequency. Enter the receive frequency in MHz. The normal separation between the transmit and receive frequencies is 200 MHz. The absolute minimum separation is 100 MHz.

h. Receiving Data, Alternate Frequency. If an alternate receive frequency has been assigned, enter the frequency in MHz.

TSR:	ASSIGNED TERMINAL LOCATION:		
	REMOTE TERMINAL LOCATION:		
REMOTE PATH: ___ MILES ___ KILOMETERS			
ITEM	ASSIGNED TERMINAL	REMOTE TERMINAL	REMARKS
FREQ CONTROL (Tx)	INT ___ EXT ___	INT ___ EXT ___	
PRI FREQ (Tx)	___ MHz	___ MHz	
ALT FREQ (Rx)	___ MHz	___ MHz	
LO SETTING/PRI (Rx)	___ MHz	___ MHz	
LO SETTING/ALT (Rx)	___ MHz	___ MHz	
ANTENNA TYPE	2 ft ___ 4 ft ___	2 ft ___ 4 ft ___	
ANTENNA POLARIZATION	HOR ___ VERT ___	HOR ___ VERT ___	
RF REMOTED	YES ___ NO ___	YES ___ NO ___	
CABLE LENGTH	___ FT	___ FT	15>150 ft. ADDITIONAL CABLE REQ'D
MOUNTING CONFIGURATION	POLE/MAST ___ TRIPOD ___	POLE/MAST ___ TRIPOD ___	
MODE OF OPERATION	NORMAL ___ REPEATER ___	NORMAL ___ REPEATER ___	
Notes:			

Pg. of

Figure A-D-29. RT-1462U/TRC-170 TSSR Crew Assignment Sheet

ASSIGNED TERMINAL SWITCH SETTINGS

TRANSMITTER

AC PWR MODULE (RIGHT SIDE)
MOTHER BOARD CCA (TOP LEFT) S1: 115V___ 230V___

SYNTHESIZER MODULE (LEFT SIDE)

INT PROGRAMMABLE DIVIDER SWITCH SCT FRONT PANEL THUMBWHEEL SWITCH
SETTINGS: S5_ S4_ S3_ S2_ S1_ SETTINGS: FREQ.SEL.___ ___

BASEBAND MODULE
STRAP ATTENUATOR (LEFT SIDE) SETTING:__ dB
VARIABLE AMPLITUDE EQUALIZER (LEFT OR RIGHT SIDE): _0 50_ 100_ 200_ 300_ ft
ORDERWIRE PC BOARD (LEFT SIDE): LOW_ HIGH _
TEST TONE SWITCH (FRONT): AUDIO_✓

CONTROL/MONITOR MODULE (FRONT)
BASEBAND ATTENUATOR: _____
AUDIO CH 1 ATTENUATOR:_____
AUDIO CH 2 ATTENUATOR:_____

RECEIVER

AC PWR MODULE (RIGHT SIDE)
MOTHER BOARD CCA (TOP LEFT) S1: 115V_ 230V __

AFC MODULE (RIGHT SIDE)
U-LINK SETTING: E9 to A_ E9 to B _

BASEBAND MODULE
STRAP ATTENUATOR (LEFT SIDE) SETTING:____dB
ORDERWIRE PC BOARD (LEFT SIDE): LOW__ HIGH __

CONTROL/MONITOR MODULE (FRONT)
BASEBAND ATTENUATOR:____
AUDIO CH 1 ATTENUATOR:____
AUDIO CH 2 ATTENUATOR:____
SVC CH SWITCH:_____

Notes:

Pg. of

Figure A-D-29. (Cont'd)

i. Receiving Data, Low (LO) Setting, Primary Frequency. Enter the local oscillator frequency corresponding to the receive frequency. This value is 70 MHz above or below the receive frequency. The normal frequency is 70 MHz below the receive frequency.

j. Receiving Data, LO Setting, Alternate Frequency. Enter the local oscillator frequency corresponding to the alternate receive frequency. This value is 70 MHz above or below the alternate receive frequency.

k. Antenna Type. Specify the size of the antenna, either a 2-foot or a 4-foot dish, depending upon system constraints. Some guidelines are as follows: for an LOS link of less than 5 miles, use a 2-foot antenna; for links of 9 miles or greater, use the 4-foot antenna; and for high priority mission traffic, use the 4-foot antenna.

l. Antenna Polarization. Enter horizontal or vertical.

m. RF Remoted. Specify whether the RF module is to be mounted in a remote enclosure located up to 300 feet away.

n. Cable Length. If the RF module is to be remoted, specify the cable length.

o. Mounting Configuration. Specify POLE/MAST or TRIPOD.

p. Mode of Operation. Enter NORMAL or REPEATER. If the repeater mode of operation is desired, then two 5CCGp cable assemblies 01 will be required. In addition, a short length of CX-11230 cable with connectors on both ends will be required.

q. Notes. Enter any special notes that may be useful.

r. Transmitter, AC Power Module. Check either 115 or 230. Normal configuration is for 115 Vac.

s. Transmitter, Synthesizer Module. If INTERNAL was specified in subparagraph 28d, enter the programmable divider switch settings for S5 through S1. These switches are located on a PCB internal to the transmitter synthesizer module. Use Table A-D-22 to determine the proper switch settings for the selected transmit frequency. For the TSSR, the transmit frequency range is 14.4 to 15.35 GHz. For example, 14.506 GHz corresponds to switch setting of 96847. If EXTERNAL was specified, enter the settings for the thumbwheel switches. The two front panel

Table A-D-22. Synthesizer Setting Table

Transmit Freq (MHz)	0	1	2	3	4	5	6	7	8	9
14150	99926	99934	99941	99949	99956	99963	99971	99978	99985	99993
14160	100000	100007	100022	100022	100029	100037	100044	100051	100059	100066
14170	100074	100081	100088	100096	100103	100110	100118	100125	100132	100140
14180	100147	100154	100162	100169	100176	100184	100191	100199	100206	100213
14190	100221	100228	100235	100243	100250	100257	100265	100272	100279	100287
14200	100294	100301	100309	100316	100324	100331	100338	100346	100353	100360
14210	100368	100375	100382	100390	100397	100404	100412	100419	100426	100434
14220	100441	100449	100456	100463	100471	100478	100485	100493	100500	100507
14230	100515	100522	100529	100537	100544	100551	100559	100566	100574	100581
14240	100588	100596	100603	100610	100618	100625	100632	100640	100647	100654
14250	100662	100669	100676	100684	100691	100699	100706	100713	100721	100728
14260	100735	100743	100750	100757	100765	100772	100779	100787	100794	95201
14270	95208	95215	95222	95229	92536	95243	95250	95257	95264	95271
14280	95278	95285	95292	95299	95306	95313	95319	85326	95333	95340
14290	95347	95354	95361	95368	95375	95382	95389	95396	95403	95410
14300	95147	95424	95431	95438	95444	95451	95458	95465	95472	95479
14310	95486	95493	95500	95507	95514	95521	95528	95535	95542	95549
14320	95556	95563	95569	95576	95583	95590	95597	95604	95611	95618
14330	95625	95632	95639	95646	95653	95660	95567	95674	95681	95688
14340	95694	95701	95708	95715	95722	95729	95736	95743	95750	95757
14350	95764	95771	95778	95785	97792	95799	95806	95813	95819	95826
14360	95833	95840	95847	95854	95861	95868	95875	95882	95889	95896
14370	95903	95910	95917	95924	95931	95938	95944	95951	95958	95965
14380	95972	95979	95986	95993	96000	96007	96014	96021	96028	96035
14390	96042	96049	96056	96063	96069	96076	96083	96090	96097	96104

Table A-D-22. (Cont'd)

Transmit Freq (MHz)	0	1	2	3	4	5	6	7	8	9
14400	96111	96118	96125	96132	96139	96146	96153	96160	96167	97174
14410	96181	96188	96194	96201	96208	96215	96222	96229	96236	96243
14420	96250	96257	96264	96271	96278	96285	96292	96299	96306	96313
14430	96319	96326	96333	96340	96347	96354	96361	96368	96375	96382
14440	96389	96396	96403	96410	96417	96424	96431	96438	96444	96451
14450	96458	96465	96472	96479	96486	96493	96500	96507	96514	96521
14460	96528	96535	96542	96549	96556	96563	96569	96576	96583	96590
14470	95597	96604	96611	96618	96625	96632	96639	96646	96653	96660
14480	96667	96674	96681	96688	96694	96701	96708	96715	96722	96729
14490	96736	96743	96750	96757	96764	96771	96778	96785	96792	96799
14500	96806	96813	96819	96826	96833	96840	96847	96854	96861	96869
14510	96875	96882	96889	96896	96903	96910	96917	96924	96931	96938
14520	96944	96951	96958	96965	96972	96979	96986	96993	97000	97007
14530	97014	97021	97028	97035	97042	97049	97056	97063	97069	97076
14540	97083	97090	97097	97104	97111	97118	97125	97132	97139	97146
14550	97153	97160	97167	97174	97181	97188	97194	97201	97208	97215
14560	97222	97299	97236	97243	97250	97257	97264	97271	97278	97285
14570	97292	97299	97306	97313	97319	97326	97333	97340	97347	97354
14580	97361	97368	97375	97382	97389	97396	97403	97410	97417	97424
14590	97431	97438	97444	97451	97458	97465	97472	97479	97486	97493
14600	97500	97507	97514	97521	97528	97535	97542	97549	97556	97563
14610	97569	97576	97583	97590	97597	97604	97611	97618	97625	97632
14620	97639	97646	97653	97660	97667	97674	97681	97688	97694	97701
14630	97708	97715	97722	97729	97736	97743	97750	97757	97764	97771
14640	97778	97785	97792	97799	97806	97813	97819	97826	97833	97840

Table A-D-22. (Cont'd)

Transmit Freq (MHz)	0	1	2	3	4	5	6	7	8	9
14650	97847	97854	97861	97868	97875	97882	97889	97896	97903	97910
14660	97917	97924	97931	97938	97944	97951	97958	97965	97972	97979
14670	97986	97993	98000	98007	98014	98021	98028	98035	98042	98049
14680	98056	98063	98069	98076	98083	98090	98097	98104	98111	98118
14690	98125	98132	98139	98146	98153	98160	98167	98174	98181	98188
14700	98194	98201	98208	98215	98222	98229	98236	98243	98250	98257
14710	98264	98271	98278	98285	98292	98299	98306	98313	98319	98326
14720	98333	98340	98347	98354	98361	98368	98375	98382	98389	98396
14730	98403	98410	98417	98424	98431	98438	98444	98451	98458	98465
14740	98472	98479	98486	98493	98500	98507	98514	98521	98528	98535
14750	98542	98549	98556	98563	98569	98576	98583	98590	98597	98604
14760	98611	98618	98625	98632	98639	98646	98653	98660	98667	98674
14770	98681	98688	98694	98701	98708	98715	98722	98729	98736	98743
14780	98750	98757	98764	98771	98778	98785	98792	98799	98806	98813
14790	98819	98826	98833	98840	98847	98854	98861	98868	98875	98882
14800	98889	98896	98903	98910	98917	98924	98931	98938	98944	98951
14810	98958	98965	98972	98979	98986	98993	99000	99007	99014	99021
14820	99028	99035	99042	99049	99056	99063	99069	99076	99033	99090
14830	99097	99104	99111	99118	99125	99132	99139	99146	99153	99160
14840	99167	99174	99181	99188	99194	99201	99208	99215	99222	99229
14850	99236	99243	99250	99257	99264	99271	99278	99285	99292	99299
14860	99306	99313	99319	99326	99333	99340	99347	99354	99361	99368
14870	99375	99382	99389	99396	99403	99410	99417	99424	99431	99438
14880	99444	99451	99458	99465	99472	99479	99486	99493	99500	99507
14890	99514	99521	99528	99535	99542	99549	99556	99563	99569	99576

Table A-D-22. (Cont'd)

Transmit Freq (MHz)	0	1	2	3	4	5	6	7	8	9
14900	99583	99590	99597	99604	99611	99618	99625	99632	99639	99646
14910	99653	99660	99667	99674	99681	99688	99694	99701	99708	99715
14920	99722	99729	99736	99743	99750	99757	99764	99771	99778	99785
14930	99792	99799	99806	99813	99819	99826	99833	99840	99847	99854
14940	99861	99868	99875	99882	99889	99896	99903	99910	99917	99924
14950	99931	99938	99944	99951	99958	99965	99972	99979	99986	99993
14960	100000	100007	100014	100021	100028	100035	100042	100049	100056	100063
14970	100069	100076	100083	100090	100097	100104	100111	100118	100125	100132
14980	100139	100146	100153	100160	100167	100174	100181	100188	100194	100201
14990	100208	100215	100222	100229	100236	100243	100250	100257	100264	100271
15000	100278	100285	100292	100299	100306	100313	100319	100326	100333	100340
15010	100347	100354	100361	100368	100375	100382	100389	100396	100403	100410
15020	100417	100424	100431	100438	100444	100451	100459	100465	100472	100479
15030	100486	100493	100500	100507	100514	100521	100528	100535	100542	100549
15040	100556	100563	100569	100576	100583	100590	100597	100604	100611	100618
15050	100625	90632	100639	100646	95355	95362	95368	95375	95382	95389
15060	95395	95401	96408	95414	95421	95428	95434	95441	95447	95454
15070	95461	95467	95474	95480	95487	95493	95500	95507	95513	95520
15080	95526	95533	95539	95546	95553	95559	95566	95572	95579	95586
15090	95592	95599	95605	95612	95618	95625	95632	95638	95645	95651
15100	95658	95664	95671	95678	95684	95691	95697	95704	95711	95717
15110	95724	95730	95737	95743	95750	95757	95763	95770	95776	95783
15120	95789	95796	95803	95809	95816	95822	95829	95836	95842	95849
15130	95855	95862	95868	95875	95882	95888	95895	95901	95908	95914
15140	95921	95928	95934	95941	95947	95954	95961	95967	95974	95980

Table A-D-22. (Cont'd)

Transmit Freq (MHz)	0	1	2	3	4	5	6	7	8	9
15150	95987	95993	96000	96072	96013	96020	96026	96033	96039	96046
15160	96053	96059	96066	96007	96079	96086	96092	96099	96105	96112
15170	96118	96125	96132	96138	96145	96145	96158	96164	96171	96178
15180	96184	96191	96197	96204	96211	96217	96224	96230	96237	96243
15190	96250	96257	96263	96270	96276	96283	96289	96296	96303	96309
15200	96316	96322	96329	96336	96342	96349	96355	96362	96368	96375
15210	96382	96388	96395	96401	96408	96414	96421	96428	96434	96441
15220	96447	96454	96461	96467	96474	96480	96487	96493	96500	96507
15230	96513	96520	96526	96533	96539	96546	96553	96559	96566	96572
15240	96579	96586	96592	96599	96605	96612	96618	96625	96632	96638
15250	96645	96651	96658	96664	96671	96678	96684	96691	96697	96704
15260	96711	96717	96724	96730	96737	96743	96750	96757	96763	96770
15270	96776	96783	96789	96796	96803	96809	96816	96822	96829	96836
15280	96842	96849	96855	96862	96868	96875	96882	96888	96895	96901
15290	96908	96914	96921	96928	96934	96941	96947	96954	96961	96967
15300	96974	96980	96987	96993	97000	97007	97013	97020	97026	97033
15310	97039	97046	97053	97059	97066	97072	97079	97086	97092	97099
15320	97105	97112	97118	97125	97132	97138	97145	97151	97158	97164
15330	97171	97178	97184	97191	97197	97204	97211	97217	97224	97230
15340	97237	97243	97250	97257	97263	97270	97276	97283	97289	97296
15350	97303	97309	97316	97322	97329	97336	97342	97349	97355	97362

thumbwheel switches select one of up to 100 frequencies provided by Preprogrammed Programmable Read-Only Memories (PROMs). Selection of the transmit frequency by the programmable divider switches is the normal method used. The internal switches provide a greater selection of frequencies than provided by the PROMs.

t. Transmitter, Baseband Module. The baseband strap attenuator should be set according to the input source (Table A-D-23). The baseband strap attenuator has five movable U-links (0-,.5-, 1-, 2-, 4-, and 8- dB values of attenuation), which may be inserted in either the IN or OUT position for each value of attenuation. In the IN position, the pad is in the circuit. In the OUT position, the pad is bypassed. Each U-link is positioned for the total attenuation desired.

u. Transmitter, Control/Monitor Module. Enter the baseband attenuator. (See Table A-D-23.) The audio channel 1 and 2 attenuators are normally set to 0. (In the repeater mode, place in position #1.)

(1) The variable amplitude equalizer is used when the RF module is mounted in a remote enclosure. It should be specified to correspond to the number of feet of cable connecting the main enclosure and the remote enclosure. If the RF module is not remoted, specify 0.

(2) For normal operation, a U-link should be inserted between pins E3 and E4 (LOW) on the Transmit Orderwire PCB. This procedure ensures that the SEND signal tone can be heard in the handset.

(3) The test tone switch on the front panel should be placed in the audio position (OUT). This procedure allows the test tone to be sent over the orderwire and not the baseband. This position is normally preset at the factory.

v. Receiver, AC Power Module. Enter 115 or 230; normal entry is 115.

w. Receiver, AFC Module. Specify whether the U-link should be set from E9 to point A or E9 to point B. A setting of E9 to A sets the local oscillator frequency at 70 MHz below the RF receiver frequency, which is the normal setting. A setting of E9 to B sets the local oscillator frequency at 70 MHz above the RF receive frequency.

x. Receiver, Baseband Module. The baseband strap attenuator should be set according to the input source. (See Table A-D-23.) This baseband strap attenuator has five movable U-links (0.5-, 1-, 2-, 4-, and

8- dB values of attenuation), which may be inserted in either the IN or OUT position for the total attenuation desired. For normal operation, a U-link should be inserted between pins E3 and E4 (LOW) on the Receive Orderwire PC board. This setting ensures that a proper receiver level is obtained.

Table A-D-23. Required Attentuations for Various Inputs

Baseband Input Source	Front Panel Attenuator Switch (dB)	(Left Side) Strap Attenuator (dB)
1 volt peak-to-peak	5	5.5
MD-1026	9	11.5
AN/TAC-1	9	11.5

y. Receiver, Control/Monitor Module. Enter the baseband attenuator. (See Table A-D-23.) The audio channel 1 and 2 attenuators are normally set to 0. The SVC CH switch is normally set for the CH 1 position. It must be in the CH 1 position for repeater operation.

29. AN/TRC-138A/B Crew Assignment Sheet. This sheet (Figure A-D-30) is used to partially describe the configuration of the AN/TRC-138A to satisfy the requirements of a particular mission or deployment. A number of the following additional CASs may be needed to fully describe the terminal configuration: MGM, GM, HSCDM, and OCU-II.

a. Location. Enter the site designation if one is assigned.

b. Crew Chief. Enter the name of the crew chief.

c. Equipment ID. Enter terminal ID number.

d. Required Operational Time. Enter the time the link (radio-to-radio) is to be operational.

e. Distant End Terminal. Enter the site designation if one is assigned.

LOCATION:				
CREW CHIEF:				
EQUIPMENT ID:		REQUIRED OPERATIONAL TIME:		
AN/GRC-222 RADIO INFORMATION				
RADIO INFORMATION	RADIO 1	RADIO 2	RADIO 3	REMARKS
DATA RATE (Kbps)				
PRI XMT FREQ (GHz)				
ALT XMT FREQ (GHz)				
PRI RCV FREQ (GHz)				
ALT RCV FREQ (GHz)				
POLARIZATION				
AZIMUTH (DEG M)				
ELEVATION (DEG)				
ANTENNA HEIGHT (ft)				
LOCAL TERMINAL DIAGRAM				

Pg. of

Figure A-D-30. AN/TRC-138A/B Crew Assignment Sheet

f. Data Rate. Enter the data rate each radio is to support: 1,024, 1,152, 1,536, 2,048, 2,304, 4,096, 4,608, 9,360, or 18,720 Kbps.

g. PRI XMT Freq. Enter the primary transmit frequency.

h. ALT XMT Freq. Enter the alternate transmit frequency.

i. PRI RCV Freq. Enter the primary receive frequency.

j. ALT RCV Freq. Enter the alternate receive frequency.

k. Polarization. Enter the desired polarization for the antenna feedhorn assembly (horizontal or vertical).

l. Azimuth. Enter the azimuth to the distant terminal in degrees magnetic.

m. Elevation. Enter the required antenna reflector elevation in degrees.

n. Antenna Height. Enter the desired height of the antenna reflector in feet.

30. AN/TRC-173 Crew Assignment Sheet. The AN/TRC-173 sheet (Figure A-D-31) is used to partially describe the configuration of the AN/TRC-173 to satisfy the requirements of a particular mission or deployment. A number of the following additional sheets may be needed to fully describe the terminal configuration: TGM, GM, LSCDM, RMC, RLGM, RLGM/CD, and OCU-I.

a. Location. Enter the site designation if one is assigned.

b. Crew Chief. Enter the name of the crew chief.

c. Equipment ID. Enter terminal ID number.

d. Required Operational Time. Enter the time the link (radio-to-radio) is to be operational.

e. Distant End Terminal. Enter the site designation assigned.

f. Data Rate. Enter the data rate each radio is to support by entering the number representing the data rate the radio modem is to accommodate.

LOCATION:				
CREW CHIEF				
EQUIPMENT ID:		REQUIRED OPERATIONAL TIME:		
NOTES: 1/ f=Channel Nr + 200 2	RADIO DATA RATES			
	Bit Rate	RM	Bit Rate	RM
	128	2	512	6
	144	3	576	7
	256	4	1,024	8
	288	5	1,152	9

AN/GRC-103(V)4 RADIO INFORMATION			
DISTANT END	RADIO 1	RADIO 2	REMARKS
DATA RATE (Kbps)			
PRI XMT FREQ			
ALT XMT FREQ			
PRI RCV FREQ			
ALT RCV FREQ			
POLARIZATION	_ Hor _ Ver	_ Hor _ Ver	
AZIMUTH (DEG M)	_ Deg M	_ Deg M	
ELEVATION (DEG)	_ Deg	_ Deg	
ANTENNA HEIGHT	_ ft		

LOCAL TERMINAL DIAGRAM

Pg. of

Figure A-D-31. AN/TRC-173 Crew Assignment Sheet

g. PRI XMT Freq. Enter the primary transmit frequency.

h. ALT XMR Freq. Enter the primary transmit frequency.

i. PRI RCV Freq. Enter the primary receive frequency.

j. ALT RCV Freq. Enter the alternate receive frequency.

k. Polarization. Enter the desired polarization for the antenna feedhorn assembly (horizontal or vertical).

l. Azimuth. Enter the azimuth to the distant terminal in degrees magnetic.

m. Elevation. Enter the required antenna reflector elevation in degrees.

n. Antenna Height. Enter the desired height of the antenna reflector in feet.

31. AN/TRC-174 Crew Assignment Sheet. This CAS (Figure A-D-32) is used to partially describe the configuration of the AN/TRC-174 to satisfy the requirements of a particular mission or deployment. A number of the following additional CASs may be needed to fully describe the terminal configuration: GM, LSCDM, and OCU-I.

a. Location. Enter the site designation if one is assigned.

b. Crew Chief. Enter the name of the crew chief.

c. Equipment ID. Enter terminal ID number.

d. Recruited Operational Time. Enter the time the link (radio-to-radio) is to be operational.

e. Distant End Terminal. Enter the site designation if one is assigned.

f. Data Rate. Enter the data rate each radio is to support by entering the number representing the data rate the radio modem is to accommodate.

g. PRI XMT Freq. Enter the primary transmit frequency.

h. ALT XMT Freq. Enter the alternate transmit frequency.

LOCATION:	
CREW CHIEF:	
EQUIPMENT ID:	REQUIRED OPERATIONAL TIME:

NOTES:
1. F(MHz)=$\frac{\text{ChannelNr}}{2}$+200
2. Degrees Magnetic (DEG M)

RADIO DATA RATES

BIT RATE	RM	BIT RATE	RM
128	2	512	6
144	3	576	7
256	4	1024	8
288	5	1152	9

AN/GRC-103 RADIO INFORMATION

RADIO INFORMATION	RADIO 1	RADIO 2	RADIO 3	REMARKS
DISTANT END				
DATA RATE	___ Kbps	___ Kbps	___ Kbps	
PRI XMIT FREQ (1)				
ALT XMT FREQ (1)				
PRI RCV FREQ (1)				
ALT RCV FREQ (1)				
POLARIZATION	___ HOR ___ VER	___ HOR ___ VER	___ HOR ___ VER	
AZIMUTH	___ Deg M	___ DegM	___ Deg M	
ELEVATION	___ Deg	___ Deg	___ Deg	
ANTENNA HEIGHT	___ ft	___ ft	___ ft	

LOCAL TERMINAL INFORMATION

NOTES:

Pg. of

Figure A-D-32. AN/TRC-174 Crew Assignment Sheet

i PRI RCV Freq. Enter the primary receive frequency.

j. ALT RCV Freq. Enter the alternate receive frequency.

k. Polarization. Enter the desired polarization for the antenna feedhorn assembly (horizontal or vertical).

l. Azimuth. Enter the azimuth to the distant terminal in degrees magnetic.

m. Elevation. Enter the required antenna reflector elevation in degrees.

n. Antenna Height. Enter the desired height of the antenna reflector in feet.

32. AN/TRC-175 Crew Assignment Sheet. The AN/TRC-175 sheet (Figure A-D-33) is used to partially describe the configuration of the AN/TRC-175 to satisfy the requirements of a particular mission or deployment. A number of the following additional sheets may be needed to fully describe the terminal configuration: MGM, GM, HSCDM, and OCU-II.

a. Location. Enter the site designation, if assigned.

b. Crew Chief. Enter the name of the crew chief.

c. Equipment ID. Enter terminal ID number.

d. Required Operational Time. Enter the time the link (radio-to-radio) is to be operational.

e. Distant End Terminal. Enter the site designation if one is assigned.

f. Data Rate. Enter the data rate each radio is to support by entering the number representing the data rate the radio modem is to accommodate.

g. PRI XMT Freq. Enter the primary transmit frequency.

h. ALT XMT Freq. Enter the alternate transmit frequency.

Location:			
Crew Chief:			
Equipment ID:		Required Operational Time:	
AN/GRC-222 Radio Information			
Radio Information	Radio 1	Radio 2	Remarks
Distant End Terminal Type			
Data Rate (Kbps)			
PRI XMT FREQ (GHz)			
ALT XMT FREQ			
PRI RCV FREQ			
ALT RCV FREQ			
POLARIZATION	___ HOR ___ VER	___ HOR ___ VER	
AZIMUTH			
ELEVATION			
ANTENNA HEIGHT			
Local Terminal Diagram			

Pg. of

Figure A-D-33. AN/TRC-175A/B Crew Assignment Sheet

i. PRI RCV Freq. Enter the primary receive frequency.

j. ALT RCV Freq. Enter the alternate receive frequency.

k. Polarization. Enter the desired polarization for the antenna feedhorn assembly (horizontal or vertical).

l. Azimuth. Enter the azimuth to the distant terminal in degrees magnetic.

m. Elevation. Enter the required antenna reflector elevation in degrees.

n. Antenna Height. Enter the desired height of the antenna reflector in feet.

33. AN/FCC-100(V)6 Crew Assignment Sheet. See Figure A-D-34.

34. CM (MD-1270) Crew Assignment Sheet. This sheet (Figure A-D-35) provides a means for specifying the channel and group rate, timing, switch settings, and DVOW ring code directory for the CM.

a. General Setup

(1) Built-In Test Equipment (BITE). The CM is used throughout the MSE network and each configuration uses a different set of CCAs. The thumbwheel settings of the BITE CCA defines the configuration for the BITE CCA or BITE processor. For the EAC SEN, set to 1.

(2) Timing Generator Timing Generator Automatic Signaling Card (TIMTG/TGASC). The CM can operate in MASTER, using its internal crystal oscillator, or in SLAVE, where the timing is recovered from the incoming DTG. Because the stability of the internal oscillator is significantly less than the rubidium standard in the AN/TTC-39 series, this should be set to SLAVE.

(3) TED Bypass. In some EAC applications, the TED in the small extension node (SEN) must be bypassed. Circle Yes to indicate if the TED bypass is required.

b. GM Functions. The CM in the EAC SEN is configured with only one GM 1.

LDRM:			Assemblage Location						
Aggregate Programming									
Control Terminal	150 Baud 75 Baud		600 Baud 1200 Baud		2400 Baud 4800 Baud		Negative Mark Positive Mark		
Data Format NRZ CDϕ	Equirate Data Yes No		Data Rate		Buffer Size		0, 4, 8, 16, 32, 64		
NRZ	TXREF				AUX, INT, RXCLKIN, TXCLKIN				
NRZ	RXREF				AUX, INT, RXCLKIN, STN				
CDϕ	TXREF				AUX, TXTCKSRC-TRK, PORT 16				
CDϕ	RXREF				AUX, INT, RECRXCLK, PORT 16				
TXCLK	TXIN SCR TRK	TXCLK RXCLK			Normal Inverted		Neg Mark Sense Pos		
Error CHK	ENA DIS.		REM Hardware	ENA DIS.			Port Leads	ACT. OFF	
Frame 1, 2			Loopback None, LOC-INT, LOC-EXT, REM-EXT						
CAU									
CAU	Off, KG-81, KG-94, KG-194 KG-34, KG-84, User Defined								
Aggregate Hardware									
Carrier Module	Strapping								
NRZ		SYNC LO Speed 1.2-384 Kbps		BAL		UNBAL		NRZ	CDϕ
		SYNC HI Speed 1.2-2048 Kbps							
		RS-422/423 1.2-2048 Kbps							
CDϕ		LO Speed 16-64 Kbps		≤ 2048				≤ 576	
		HI Speed 72-2048 Kbps		≤ 2048				≤ 576	

Figure A-D-34. AN/FCC-100(V)6/LDRM Crew Assignment Sheet

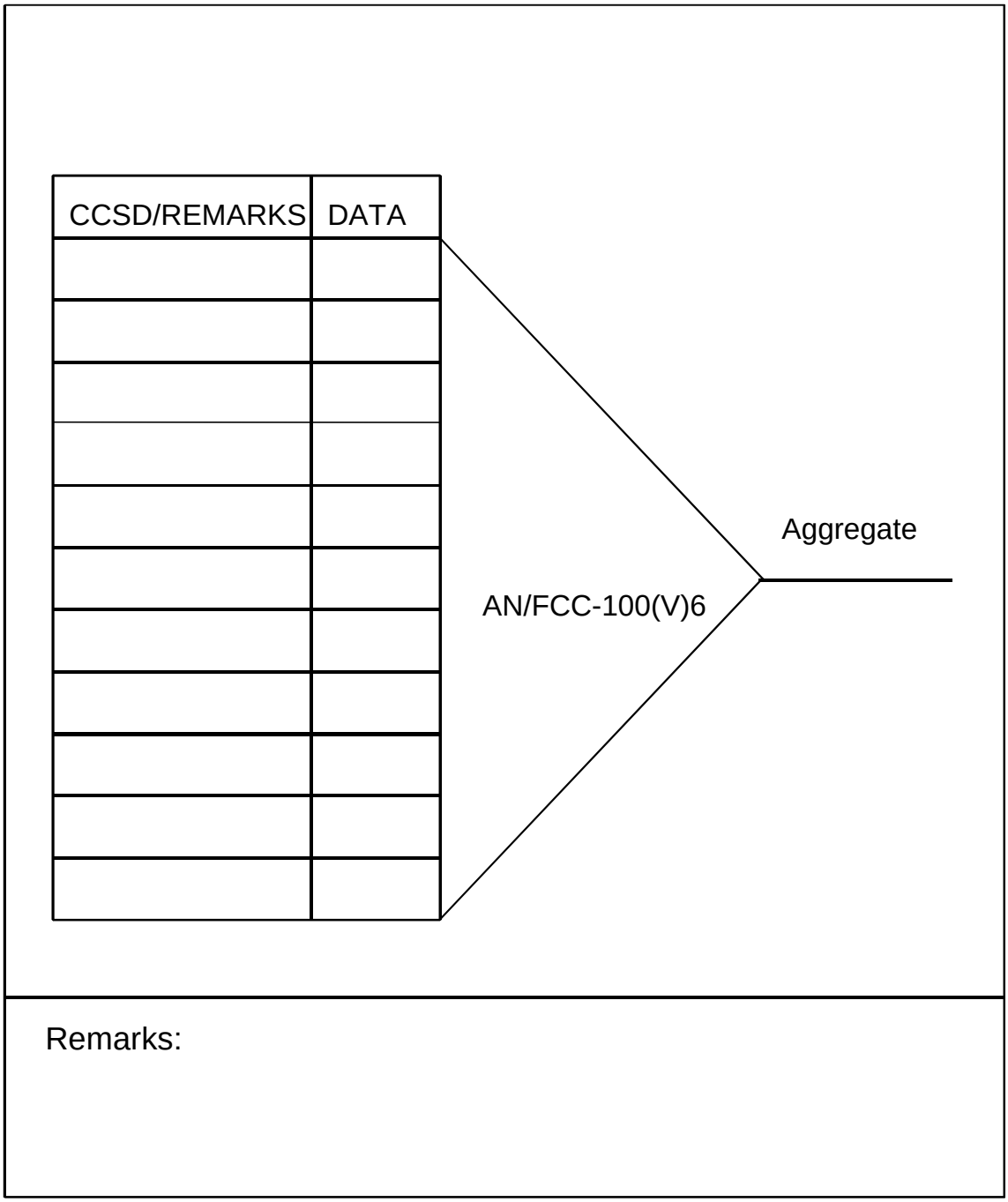

Figure A-D-34. (Cont'd)

LDRM:	Assemblage Location
LDRM PORT & AGGREGATE INTERFACES AND DATA RATES	
AGGREGATE INTERFACES	DATA RATES
Low Speed SYNC DRIVER	MIL-STD 188-114A, Type III, Low Speed. 1.2, 2.4, 4.8, 7.2, 9.6, 14.4, 16, 19.2, 24, 28.8, 32, 38.4, 48, 50, 56, 57.6, 64, 72, 76.8, 96, 112, 115.2, 128, 144, 153.6, 192, 224, 230.4, 256, 288, 307, 384 Kbps
High Speed SYNC DRIVER	MIL-STD 188-114A, Type III, High Speed. 1.2, 2.4, 4.8, 7.2, 9.6, 14.4, 16, 19.2, 24, 28.8, 32, 38.4, 48, 50, 56, 57.6, 64, 72, 76.8, 96, 112, 115.2, 128, 144, 153.6, 192, 224, 230.4, 256, 288, 307, 384, 448, 512, 576, 1024, 1344, 1536, 1544, 1920, 2048 Kbps
RS-422A/423A DRIVER EIA RS-422A/423A	MIL-STD 188-114A, Type II, High Speed. 1.2, 2.4, 4.8, 7.2, 9.6, 14.4, 16, 19.2, 24, 28.8, 32, 38.4, 48, 50, 56, 57.6, 64, 72, 76.8, 96, 112, 115.2, 128, 144, 153.6, 192, 224, 230, 256, 288, 307, 384, 448, 512, 576, 1024, 1344, 1536, 1544, 1920, 2048 Kbps
CDϕ DRIVER, LOW SPEED	16, 32, 56, 64 Kbps
CDϕ DRIVER, HIGH SPEED	72, 128, 144, 256, 288, 512, 576, 1024, 2048 Kbps
PORT INTERFACES	DATA RATES
SYNCHRONOUS NRZ LOW SPEED	50, 75, 150, 300, 600 bps; 1, 1.2, 1.8, 2, 2.4, 3, 3.6, 4, 4.8, 7.2, 8, 9.6, 12, 14.4, 16, 19.2, 24, 28.8, 32, 38.8, 48, 50, 56, 57.6, 64 Kbps
SYNCHRONOUS NRZ HIGH SPEED	50, 75, 150, 300, 600 bps; 1, 1.2, 1.8, 2, 2.4, 3, 3.6, 4, 4.8, 7.2, 8, 9.6, 12, 14.4, 16, 19.2, 24, 28.8, 32, 38.8, 48, 50, 56, 57.6, 64, 72, 76.8, 96, 112, 115.2, 128, 144, 153.6, 192, 224, 230.4, 256, 288, 307.2, 384, 512 Kbps
CDϕ PORT (DAUGHTER CARD)	50, 75, 150, 300, 600 bps; 1.2, 2.4, 4.8, 7.2, 8, 9.6, 16, 19.2, 24, 32, 64, 96 Kbps
CDϕ DUAL PORT LOW SPEED	16, 19.2, 32, 56, 64, Kbps (with or without) Phantom Power: 56, -46.9 VDC
CDϕ DUAL PORT HIGH SPEED	72, 96, 128, 144, 153.6, 192, 230.4, 256, 288, 307.2, 284, 512, 576 Kbps
ASYNCHRONOUS	50, 75, 110, 134.4, 150, 300, 600 bps; 1.2, 2.4, 3.6, 4.8, 7.2, 9.6, 19.2 Kbps
ISOCHRONOUS	≤ 18.75, ≤ 75, ≤ 150, ≤ 300, ≤ 600 bps; ≤ 1.2, ≤ 2.4, ≤ 4.8 Kbps

Figure A-D-34. (Cont d)

ANALOG INTERFACES	DATA RATES
CVSD VOICE	12, 14.4, 16, 19.2, 24, 28.8, 32, 38.4, 48, 50, 56, and 64 Kbps
PCM VOICE	64 Kbps
2W Dual FXS, Voice	64 Kbps PCM- (4.8, 7.2, and 9.9 Kbps CELP)
2W Dual FXO, Voice	64 Kbps PCM- (4.8, 7.2, and 9.9 Kbps CELP)
4W Dual E&M Voice	64 Kbps PCM- (4.8, 7.2, and 9.9 Kbps CELP)
STATISTICAL MULTIPLEXER	DATA RATES
ASYNCHRONOUS	45.45, 50, 56.8, 75, 110, 134.5, 150, 300, 600 Kbps; 1.2, 1.8, 2, 2.4, 3.6, 4.8, 7.2, 9.6, 19.2 Kbps and AUTOBAUD at above rates
COMPOSITE DATA RATES	300, 600 bps; 1, 1.2, 2, 2.4, 3, 3.6, 4, 4.8, 7.2, 9.6, 19.2, 24, 28.8, 32 Kbps

Figure A-D-34. (Cont'd)

LRDM	ASSEMBLAGE:																
	Location:																
Line Number	1	2	3	4	5	6	7	8	9	10	11	12	13	14	15	16	Options
PROGRAMMING																	
INTERFACE OPTIONS	LINE TYPE																1. SYN-NRZ 2. ASY-NRZ 3. ISO 4. CVSD 5. CDϕ 6. PCM 7. ADPCM 8. T-CDϕ 9. D-CDϕ
OPERATIONAL MODE	1, 2																1. EQUIRATE 2. OTHER (SEE MANUAL FOR SIMPLEX OR ASYMETRIC OPERATIONS.)
DATA RATE	ALL																(SEE TABLE 1 FOR ALLOWABLE CHOICES)
DATA LENGTH	2																5, 6 , 7, 8 BITS
STOP BITS	2																1, 1.5, 2 (BITS)
CONTROL LEADS																	1. HIGH 2. RTS-DCD 3. DTR-CTS
RX CLOCK																	E - EXTERNAL I - INTERNAL
TX CLOCK																	E - EXTERNAL I - INTERNAL

Figure A-D-34. (Cont'd)

LRDM		ASSEMBLAGE:																
		Location:																
Line Number		1	2	3	4	5	6	7	8	9	10	11	12	13	14	15	16	OPTIONS
ORDERWIRE	4, 5																	D - DIGITAL X - DON'T CARE A - ANALOG
CTS	1, 2, 3																	P - POSITIVE X - DON'T CARE A - ANALOG
PHANTOM POWER	8																	Y = YES N = NO, NA
CCSD/REMARKS																		

Figure A-D-34. (Cont'd)

COMMUNICATIONS MODEM (MD-1270)

GENERAL SETUP

CCA SLOT	CCA TYPE	SETTINGS							BITE CCA SWITCH SETTINGS	
A14/A16	BITE	1	2	3	4	5	6	7	1 RAU/ SEN 2 NOT USED 3 NOT USED	4 LOS(V)1 OR 4
A12/A15	TGASC	MASTER				SLAVE				

GROUP MODEM (GM) FUNCTIONS

GROUP MODEM 1			GROUP MODEM 2		
CABLE LENGTH (1-9)			CABLE LENGTH (1-9)		
GROUP RATE (1-9)			GROUP RATE (1-9)		
CHANNEL RATE	16 Kbps	32 Kbps	CHANNEL RATE	16 Kbps	32 Kbps
MODULATION TYPE	DIPHASE	DIPULSE	MODULATION TYPE	DIPHASE	DIPULSE

CABLE LENGTH SETTINGS

SWITCH SETTING	RCV MILES	SWITCH SETTING	
0	0	5	LOOPBACK
1	1/4	6	NOT USED
2	1/2	7	NOT USED
3	3/4	8	NOT USED
4	1	9	NOT USED

GROUP RATE SETTINGS

1	72	16K ONLY		8	1024	16 OR 32K
2	128	16K ONLY				
4	144	16K ONLY		9	1152	16 OR 32K
5	256	16 OR 32K		10	2048	16 OR 32K
6	288	16 OR 32K		11	2304	16 OR 32K
7	512	16 OR 32K		12	4096	32K ONLY
8	576	16 OR 32K		13	4608	32K ONLY

DIGITAL VOICE ORDERWIRE FUNCTIONS

DVOW CHANNEL SETTINGS

	1	2	3	4	5	6	7	8
BRIDGE	B	B	B	B	B	B	B	B
TERMINATE	T	T	T	T	T	T	T	T
MATRIX								

FRONT PANEL CONTROLS

DVOW RECEIVE RING OR HOME CODE (1-16)		
DVOW HANDSET	BRIDGE	TERMINATE

SITE	BUMPER # SERIAL #	LOS(V)1	LOS (V)3	NCS	SEN (V)1	OTHER:
		LOS (V)2	LOS (V)4	LEN	SEN (V)2	DATE:

Figure A-D-35. Communications Modem Crew Assignment Sheet

(1) Cable Length. Enter 1-9 corresponding to the length of the cable from the SEN to the supporting radio terminal or switch. Note that settings 0-5 are valid for the diphase DTGs used with the DGM radio assemblages.

(2) Group Rate. Enter 1-13 corresponding to the group rate for the DTG to the EAC SEN.

(a) For an AN/TTC-39A(V)1 or AN/TTC-39A(V)4 network, enter 7 (576-Kbps DTG).

(b) For an AN/TTC-39D network, enter 5 (288-Kbps DTG).

(c) If an AN/TRC-138A or AN/TRC-175 is used for an access radio system for the SEN, the rate must be 8 (1024 Kbps) or higher since this is the minimum group rate for the AN/GRC-222 radio.

(d) For the channel rate, circle 16 or 32 Kbps, as appropriate for the DTG.

NOTE: The channel rate must equal the basic switch rate for the parent AN/TTC-39 series CS for the SEN. For the CM Redesign, this switch is on the TIMBT card inside the CM.

(e) Diphase or Dipulse. Circle Diphase. For the CM Redesign, this switch is on the TIMBT card inside the CM.

c. DVOW Functions. For the EAC SEN applications, only DVOW channel 7 will be used.

(1) Bridge, Terminate, or Matrix Thumbwheels. Set all thumbwheels to T.

(2) DVOW Receive or Home Ring Code. Enter the one- or two-digit number defining the receive or home ring code for this SEN.

(3) DVOW Handset. Circle the appropriate setting, Bridge or Terminate. Since the EAC SEN has only one DVOW channel, this setting should be Terminate.

d. Site, Bumper Number, and Shelter Identification Data. Enter the site identification, bumper number, or serial number of the SEN. Circle the appropriate shelter type and enter the date of preparation.

e. DVOW Ring Code Directory

(1) System Number. Enter the system or DTG number for the EAC SEN access system in the block next to DVOW CHNL 7.

(2) DVOW Ring Code Directories. Identify the other assemblages by site and type of shelter next to their respective ring codes.

35. CV-4180 Line Termination Unit LTU Crew Assignment Sheet. The LTU provides a means for specifying the channel and group rate, timing, switch settings, and DVOW ring code directory (Figure A-D-36). The sheet entries are defined below:

a. Built-In Test Equipment. Set the thumbwheel on the BITE CCA to 11211 to define the LTU configuration for the BITE processor.

b. Timing Generator (TIMTG/TGASC). Because of the stability of the LTU's internal crystal oscillator, set the timing to Slave.

c. TED Bypass. Circle Yes or No. A TED is required if the LTU is extended by a radio system.

d. Cable Length. Enter a one-digit number, 1-9. As shown on the sheet, only settings 0-5 are valid for the diphase DTGs used with DGM and GMF radio assemblages.

e. Group Rate. Enter a one-digit number 1-9.

f. Channel Rate. Circle 16 or 32.

g. Modulation Type. Circle Diphase or Dipulse.

h. DVOW Home Code. Enter the receive code, 1-16.

i. Digital Line Termination Unit (DLTU) Type and Purpose. Enter the type DLTU installed in slots Al to A9 and the purpose for each DLTU.

GENERAL SETUP						
LOT	CCA TYPE	SETTINGS				
A14	TIMBT					
A12	TIMTG	MASTER	SLAVE			
BYPASS		YES	NO	DLTU SETUP		
GROUP MODEM FUNCTIONS				CCA SLOT	DLTU TYPE	PURPOSE
CABLE LENGTH (1-9)				A1		
GROUP RATE (1-9)				A2		
CHANNEL RATE		16 KHZ	32 KHZ	A3		
MODULATION TYPE		DIPHASE	DIPULSE	A4		
CABLE LENGTH SETTINGS				A5		
SWITCH SETTING	RCV MILES	SWITCH SETTING		A6		
0	0	5		A7		
1	¼	6				
2	½	7				
3	¾	8				
4	1	9				
GROUP RATE SETTINGS				A8		
1	72	16K ONLY		A9		
2	128	16K ONLY	DVOW RING CODE DIRECTORY			
3	144	16K ONLY	1		9	
4	256	16 OR 32K	2		10	
5	288	16 OR 32K	3		11	
6	512	16 OR 32K	4		12	
7	576	16 OR 32K	5		13	
8	1024	16 OR 32K	6		14	
9	1152	16 OR 32K	7		15	
DVOW			8		16	
RECEIVE RING HOME CODE (01-16)						
	SERIAL #	OTHER :				
		DATE :				

Figure A-D-36. CV-4180 LTU Crew Assignment Sheet

j. DVOW Ring Code Directory. Enter the site and terminal identification for each ring code assigned to this LTU.

36. C-11955, VOCU Crew Assignment Sheet. This worksheet (Figure A-D-37) provides a means for specifying the AN/TTC-42 orderwire terminations, switch settings, and patches for the C-11955.

a. VOCU. Enter the VOCU number.

b. Assemblage. Enter the AN/TTC-42 assemblage where the VOCU is assigned.

c. Settings

(1) Remote Location. Enter the location if the VOCU is being remoted outside the shelter. When the VOCU is remoted, the ATT engineering orderwire (EOW) lines are hardwired between the shelter and the remoted VOCU and are unavailable for EOW use.

(2) Receive Codes. Enter the three primary ring codes for the DVOW.

(3) Send Code. Enter the primary send code for the DVOW.

(4) Digital Orderwire. Enter the required patches for the indicated wire channel. There is only one LSCDM, but it can be patched to any one of the four DOW lines. When selecting the LSCDM DVOW, the first three spaces are ignored. For CVDOW/3AS-2A3, select VOCU line 1-4.

(5) DOW Select. Enter IN or OUT. If the modem selected will be passing data orderwire in addition to voice, the DOW select switch must be pulled OUT to enable the circuit.

(6) Modem Group. Select Modem 1-7.

(7) LSCDM. Select either RED or BLACK for the VOCU line that the EOW will be patched to. DOW Select is either IN or OUT.

(8) Analog Orderwire. Enter the required patches for the indicated orderwire channel. Then enter the orderwire DESTINATION

VOCU	Assemblage:
	Location:

Settings:

Remote: _____
Location:
Note: When VOCU is remoted, ATT EOW lines are inhibited.

DVOW Ring Codes:
Receive Codes: _____ _____ _____

Digital Orderwire

				MD-1023 LSCDM		
VOCU DOW	CDVOW	DOW Select In/Out	Modem Group	Red	Black	DOW Select In/Out
ATT						
2						
3						
4						
	3A8	2A3		3A8		2A3

Analog Orderwire

AVOW	2W/4W	INV	Maint	Red		
1						
2						
3						
4	Not Available					
5	Not Available					
6	Not Available					
ATT	Not Available					
		3A8				

Figure A-D-37. VOCU, C-11955 Crew Assignment Sheet

Group No	Orderwire Termination	Ring Code	Location/ Facility	Ring Code	Location/ Facility
1	Red — Black —	1		9	
		2		10	
		3		11	
		4		12	
		5		13	
		6		14	
		7		15	
		8		16	
2	Red — Black —	1		9	
		2		10	
		3		11	
		4		12	
		5		13	
		6		14	
		7		15	
		8		16	
3	RLGM — Red — Black —	1		9	
		2		10	
		3		11	
		4		12	
		5		13	
		6		14	
		7		15	
		8		16	

Figure A-D-37. (Cont'd)

Group No	Orderwire Termination	Ring Code	Location Facility	Ring Code	Location Facility
4	Red ____	1		9	
		2		10	
		3		11	
		4		12	
	Black ___	5		13	
		6		14	
		7		15	
		8		16	
5	Red ____	1		9	
		2		10	
		3		11	
		4		12	
	Black ___	5		13	
		6		14	
		7		15	
		8		16	
6	LSCDM ___	1		9	
		2		10	
		3		11	
	Red ____	4		12	
		5		13	
	Black ___	6		14	
		7		15	
		8		16	
7	LSCDM ___	1		9	
		2		10	
		3		11	
	Red ____	4		12	
		5		13	
	Black ___	6		14	
		7		15	
		8		16	

Figure A-D-37. (Cont'd)

(9) 2W/4W. The two-wire orderwire is only available on the first three AVOW lines.

(10) INV/MAINT/RED. INV patches go to the CX-4566 26-pair cables. Orderwire connections will appear on pairs 25 and 26. MAINT patches go to BLACK modems 1-7. RED patches go to RED modems 1-7.

c. DVOW Network Information for the Seven Modems

(1) Recruited Orderwire Terminations. Modems 3 and 6 can be used to power RLGM with the proper CCAs installed. All modems can be either RED or BLACK as required; however, only six TEDs are available. Only modem 7 can be connected to the LSCDM.

(2) Ring Code: Location/Facility. Enter the facility name and location beside each of the applicable 16 DVOW ring codes for that channel. This process will be the orderwire subscriber directory for the indicated orderwire channel.

37. UHF Satellite Terminal Crew Assignment Sheet. See Figure A-D-38.

38. Terminal Configuration Diagram CAS. These CASs provide a means of graphically depicting the actual terminal configuration for each type of DGM transmission system. There are seven different CASs: AN/TRC-173, AN/TRC-174, AN/TRC-138A, AN/TRC-175, AN/TRC-170, AN/TSC-85B, and AN/TSC-93B. (Figures A-D-39 to A-D-45) Each CAS provides a block diagram of the shelter with the major system components depicted. The planner need only draw the interconnecting lines to show the configuration of the terminal and then select the required timing, patching, and switch settings.

a. Draw the interconnecting lines to depict the terminal configuration for the van. Identify the system number and distant site and relay for each radio system. Identify the terminating equipment for each GM port. For example, if GM 1, port 1 terminates an RMC, then draw the RMC and identify the RMC by DTG, subgroup number (if applicable), and multiplex number.

b. Site. Enter the site designation for this van.

Transmit Location Coordinates

Satellite Location Coordinates
Link Azimuth
Link Elevation

Satellite Channel
Uplink Frequency
Downlink Frequency
Max Transmit Power

Satellite Link Margin Worksheet

Uplink		Downlink	
EIRP	_____ dBm	EIRP	+ 56 dBm
Path Loss	± 173 dBm	Path Loss	±173 dBm
Signal Power	_____	Signal Power	± 173 dBm
Sat Ant Gain	+17 dBm	Rx Ant Gain	+ dBm
Signal to Rx	_____ dBm	Signal to Rx	_____ dBm
Rx Sensitivity	+115 dBm	Rx Sensitivity	+ dBm
Fade Margin	_____ dBm	Fade Margin	_____ dBm

PROPOSED RADIO CONFIGURATION

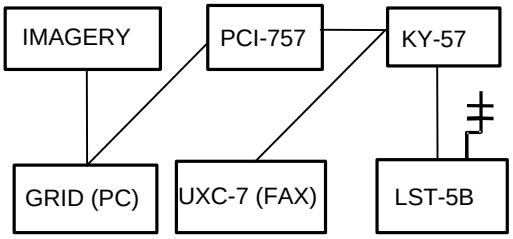

EIRP= TX PWR (-) COAX LOSS (+) ANTENNA GAIN

Watts to dBm
1 = 30
2 = 33
4 = 36
5 = 37
6 = 38
8 = 39
10 = 40
12 = 41
14 = 41
14 = 41
16 = 42
18 = 42
20 = 43
25 = 44
40 = 46
50 = 47
75 = 48
80 = 49
100 = 50
200 = 53

dBm to dBw
(+dBw)

40 = 10
43 = 13

Receiver Sensitivity

Radio	AM	FM
URC-101	-110	-115
LST-5B	-110	-117
HST-4A	-110	-122
WSC-3	-100	-115

Antenna Gain (dB)
DMC120 = 6 Db
DMC-121 = 8 dB
DMC-122 = 12 dB
DMC-125 = 5 dB
DMC-152 = 8dB
TR2011 (TX)= 15 dB
RX) = 9 dB
TR20401 = 9 dB
TR20402 = 11 dB
TR20403 = 7 dB

Figure A-D-38. UHF Satellite Crew Assignment Sheet

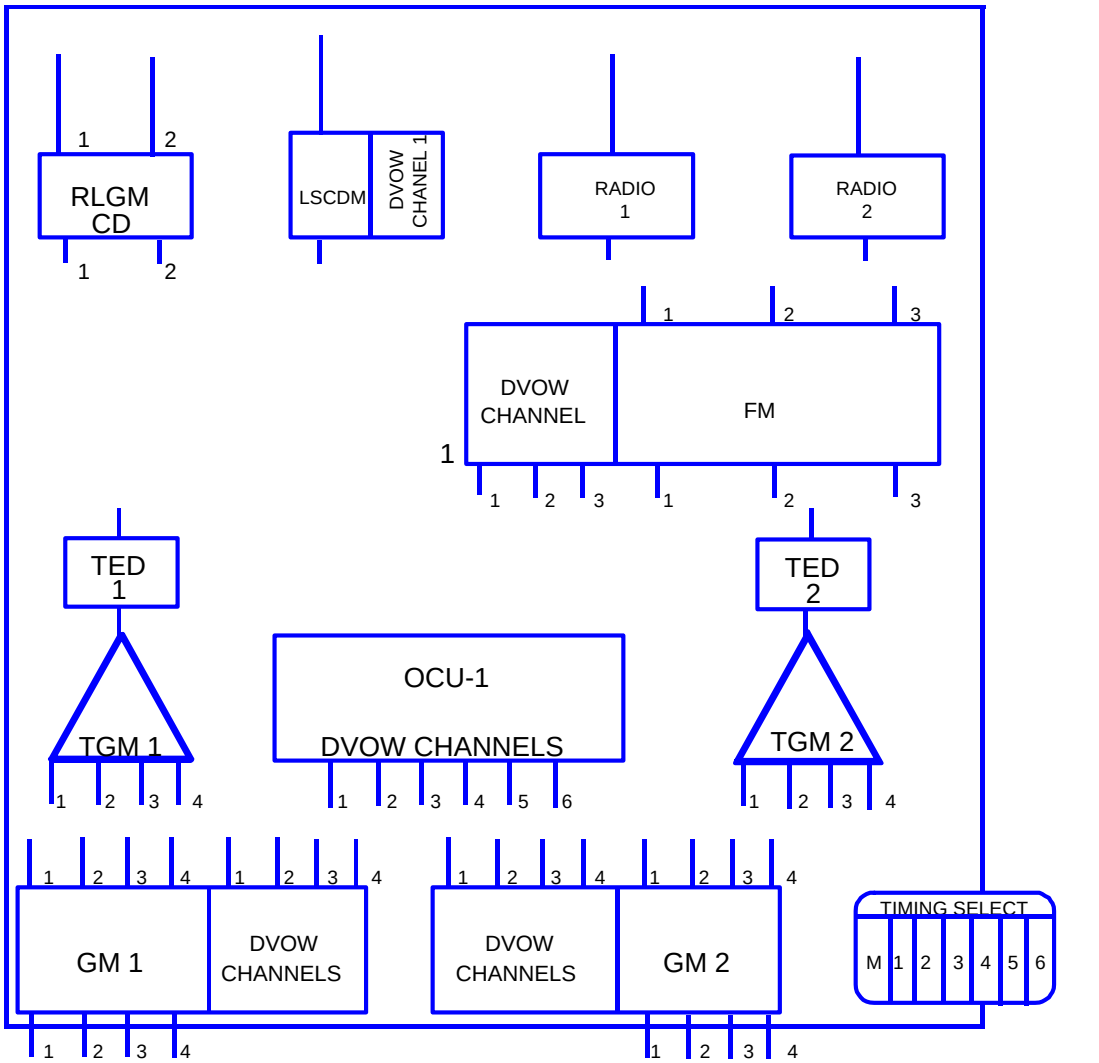

BLACK STATION CLOCK (BSC)							
TED 1	RM	TS 1	LSCDM	GM 1-1	1-2	1-3	1-4
TED 2	RM	TS 2	LSCDM	GM 2-1	2-2	2-3	2-4

AN/TRC-173 TERMINAL CONFIGURATION CREW ASSIGNMENT SHEET

SITE	BUMPER #/ SERIAL #	DATE:	COMMENTS:

Figure A-D-39. AN/TRC-173 Terminal Configuration CAS

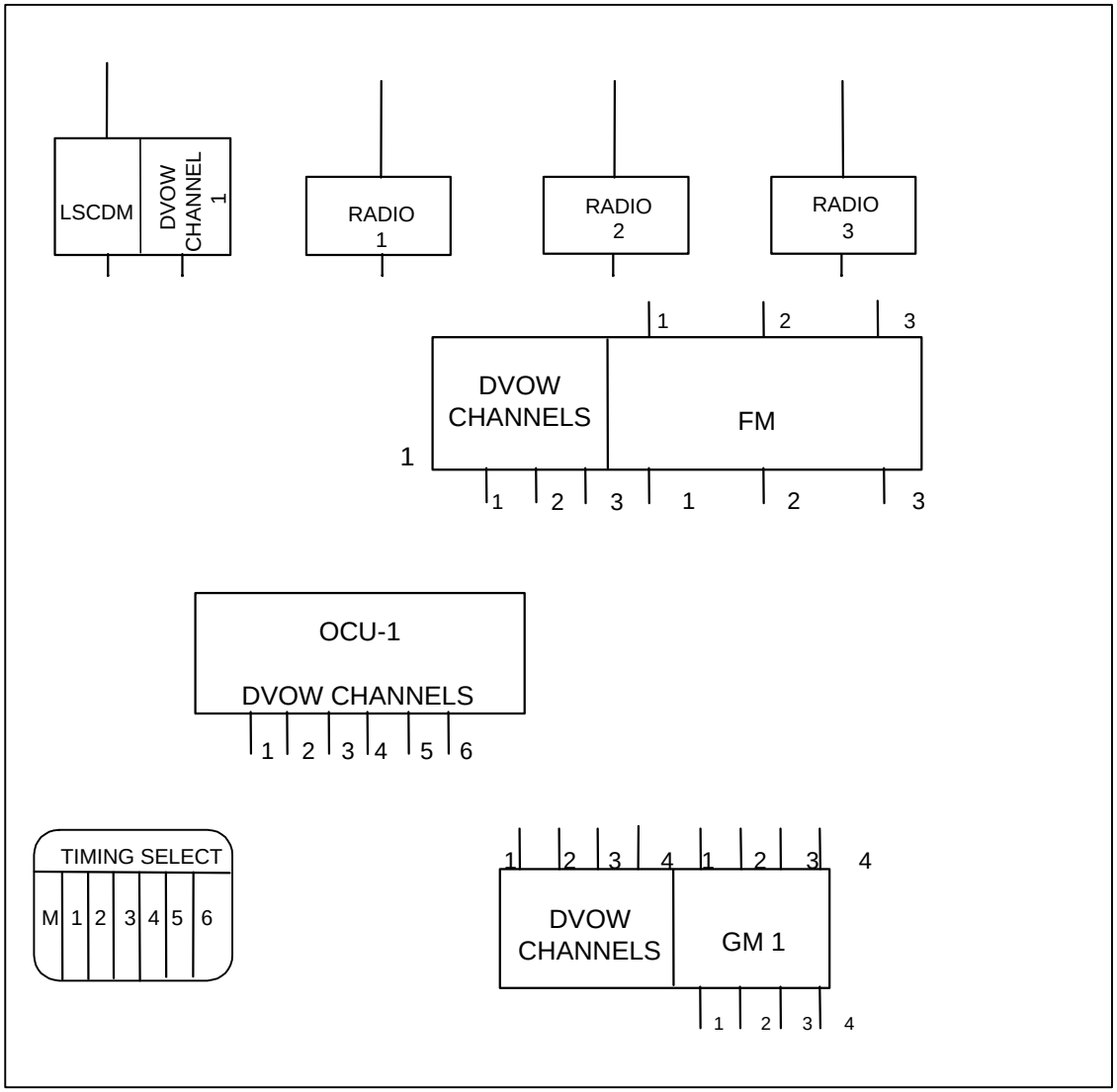

AN/TRC-174 TERMINAL CONFIGURATION CREW ASSIGNMENT SHEET

SITE	BUMPER#/ SERIAL#	DATE	COMMENT

Figure A-D-40. AN/TRC-174 Terminal Configuration CAS

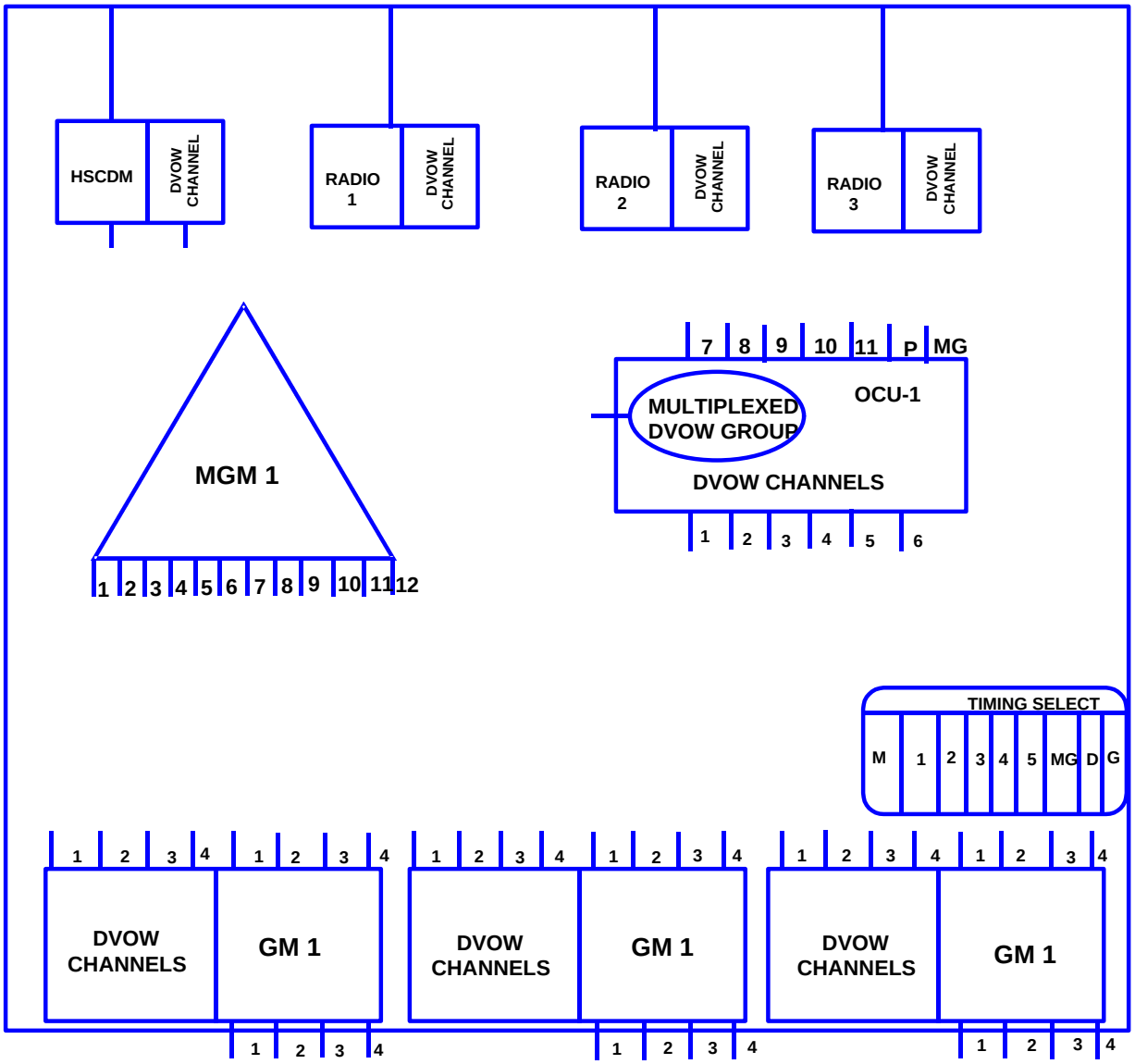

AN/TRC-138A TERMINAL CONFIGURATION CREW ASSIGNMENT SHEET

SITE	BUMPER #1 SERIAL #	DATE:	COMMENTS:

Figure A-D-41. AN/TRC-138A Terminal Configuration CAS

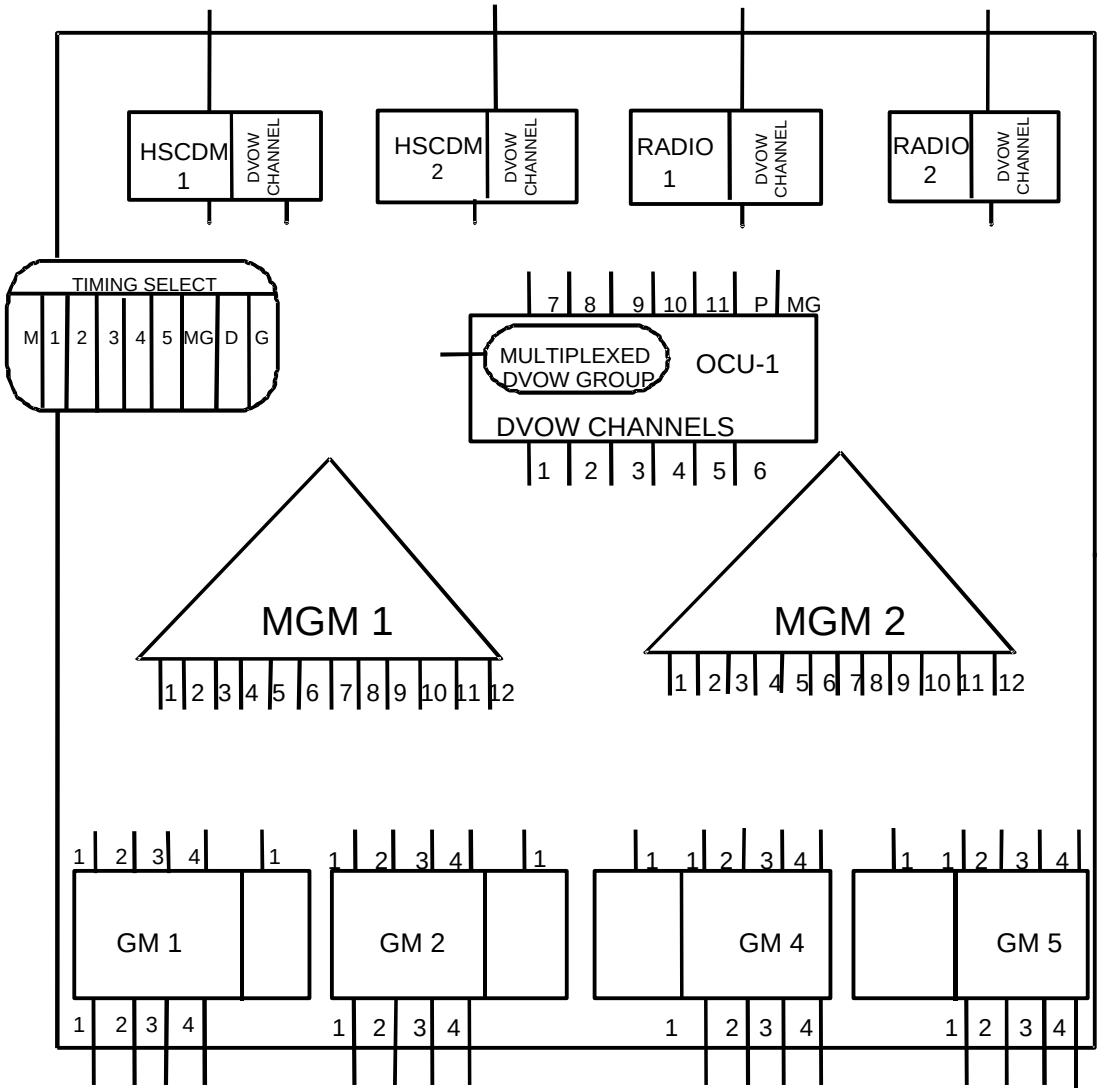

AN/TRC-175 TERMINAL CONFIGURATION CREW ASSIGNMENT SHEET

SITE	BUMPER #/ SERIAL #	DATE:	COMMENTS:

Figure A-D-42. AN/TRC-175 Terminal Configuration CAS

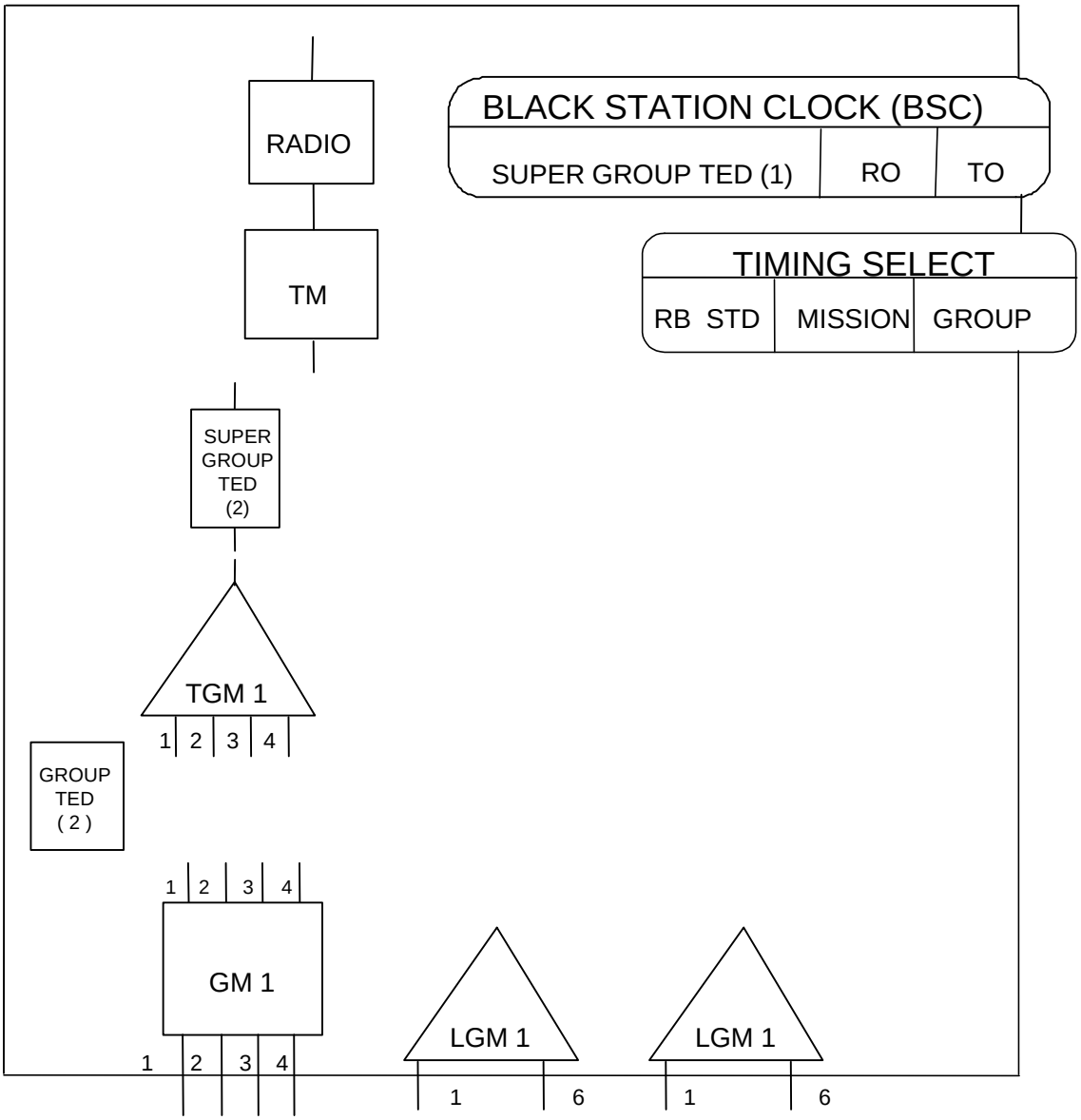

AN/TRC-170 TERMINAL CONFIGURATION CREW ASSIGNMENT SHEET

SITE	BUMPER #/ SERIAL #	DATE:	COMMENTS:

Figure A-D-43. AN/TRC-170 Terminal Configuration CAS

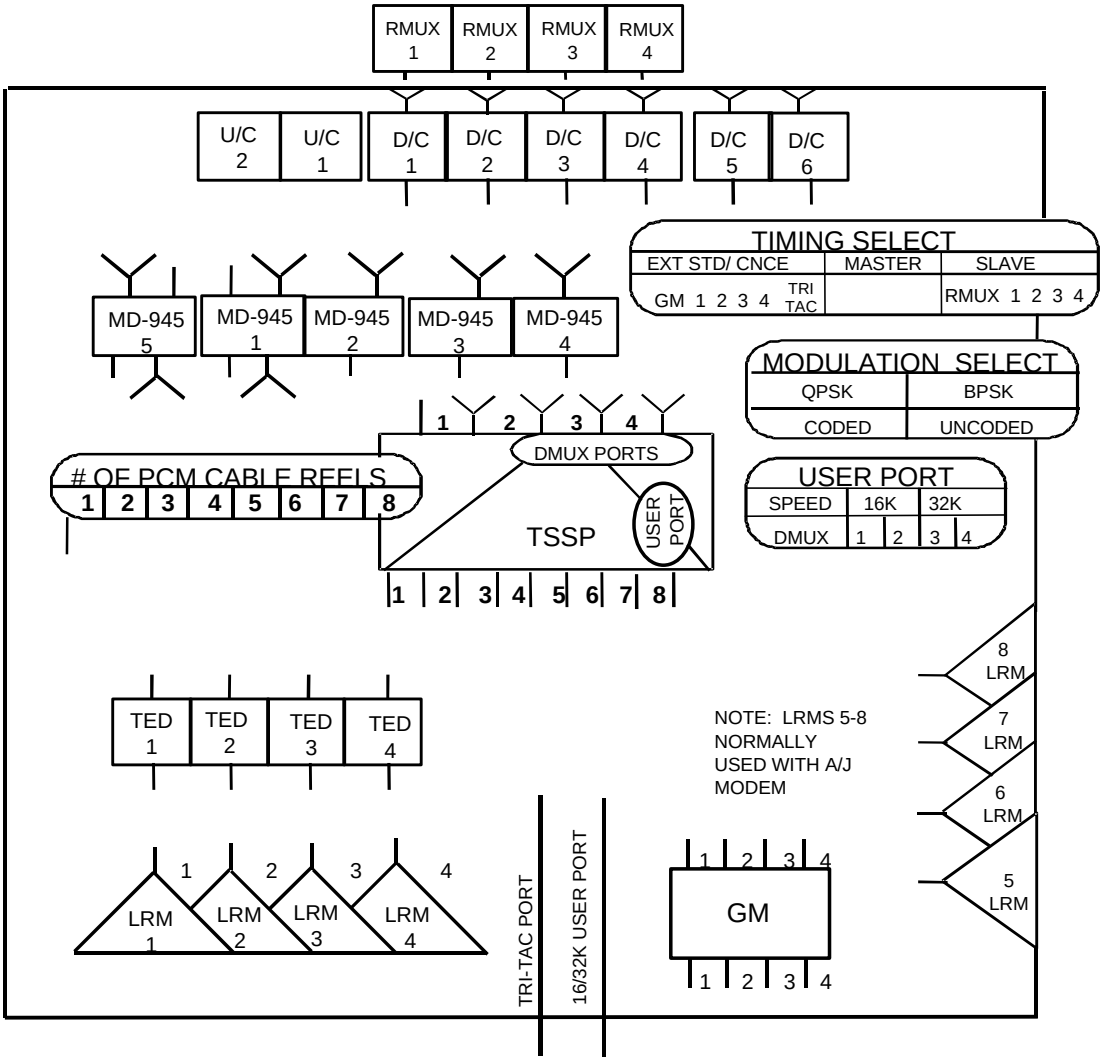

AN/TSC-85B TERMINAL CONFIGURATION CREW ASSIGNMENT SHEETS

SITE	BUMPER#/ SERIAL #	DATE:	COMMENTS:

Figure A-D-44. AN/TSC-85B Terminal Configuration CAS

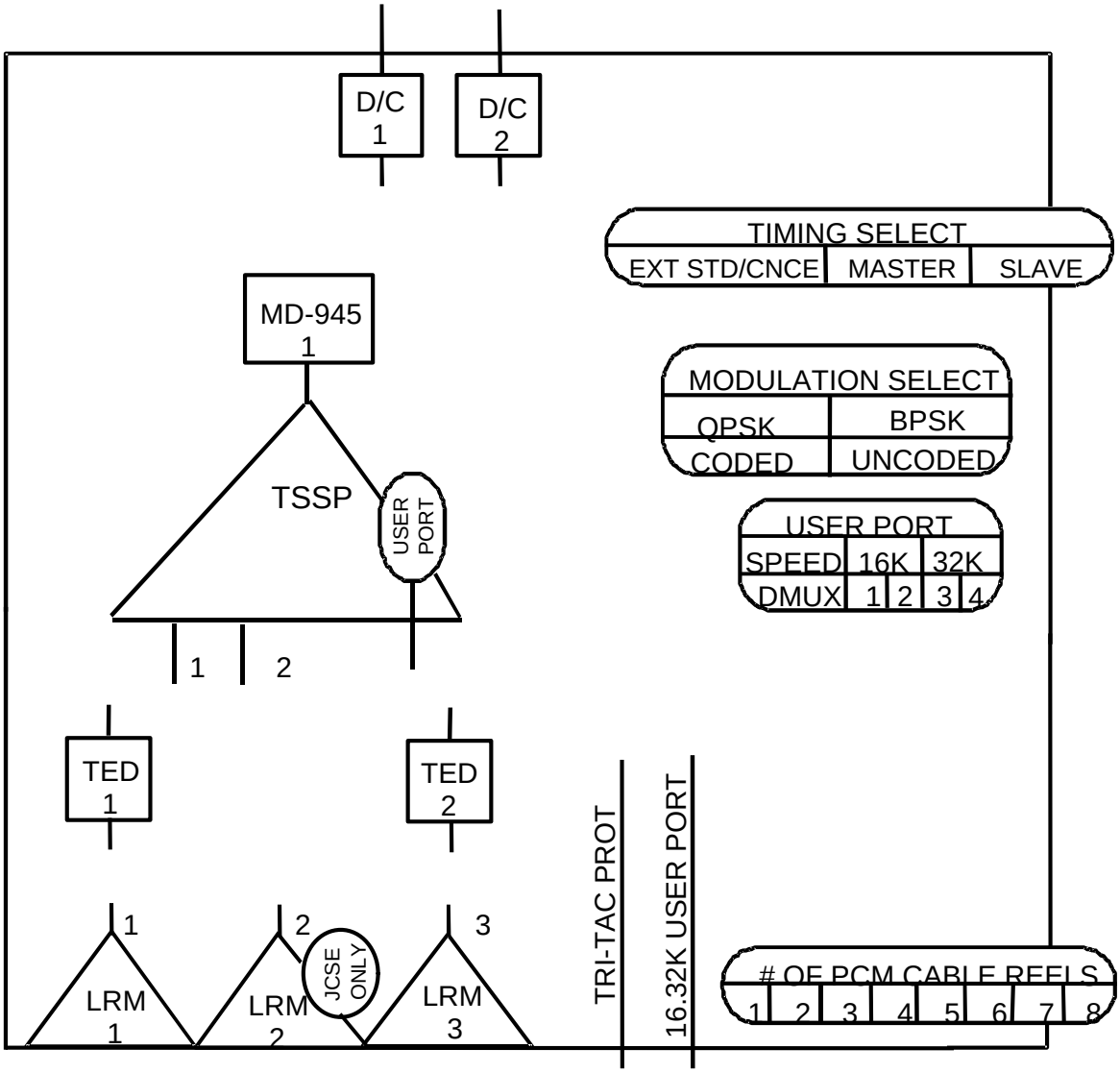

AN/TSC-93B TERMINAL CONFIGURATION CREW ASSIGNMENT SHEETS

SITE	BUMPER #/ SERIAL #	DATE:	COMMENTS:

Figure A-D-45. AN/TSC-93B Terminal Configuration CAS

c. Bumper Number or Serial Number. Enter the bumper number of the truck or serial number of the DGM terminal depicted in this diagram.

d. Date. Enter the preparation date.

e. Comments. Optional.

f. Timing and Special Instructions. Circle the appropriate setting for the timing and any other special instructions for this assemblage.

(1) AN/TRC-173. Specify:

(a) The timing source for the shelter. The AN/TRC-173 can operate in MASTER mode using its internal crystal oscillator or SLAVE mode deriving timing from one of the incoming DVOW channels.

NOTE: By convention, the primary timing source is normally patched to DVOW channel 1; therefore, TIMING SELECT is normally 1.

(b) The BSC Source TEDs are used.

NOTE: For its doctrinal application, the TED will receive its BSC from the radio modem carrying its group.

(2) AN/TRC-174. The planner must specify the timing source for the shelter. The AN/TRC-174 can operate in MASTER mode using its internal crystal oscillator or SLAVE mode deriving timing from one of the incoming DVOW channels.

NOTE: By convention, the primary timing source is normally patched to DVOW channel 1; therefore, TIMING SELECT is normally 1.

(3) AN/TRC-138A. The planner must specify the timing source for the shelter. The van can operate in:

(a) MASTER mode using its internal crystal oscillator.

(b) Group SLAVE mode deriving timing from one of the incoming DTGs.

(c) DVOW SLAVE mode deriving timing from one of the incoming DVOW channels.

NOTE: By convention, the primary timing source is normally patched to DVOW channel 1; therefore, TIMING SELECT is normally 1.

(4) AN/TRC-175. The planner must specify the timing source for the shelter. The AN/TRC-175 can operate in:

(a) MASTER mode using its internal crystal oscillator.

(b) Group SLAVE mode deriving timing from one of the incoming DTGS.

(c) DVOW SLAVE mode deriving timing from one of the incoming DVOW channels.

NOTE: By convention, the primary timing source is normally patched to DVOW channel 1; therefore, TIMING SELECT is normally 1.

(5) AN/TRC-170. The planner must specify the timing source for the shelter. The AN/TRC-170 can operate in:

(a) Rubidium standard (MASTER) mode using its internal atomic standard.

(b) Mission mode deriving timing from the radio shelter.

(c) Group mode deriving timing from one of the incoming DTGs.

NOTE: By convention, the rubidium standard provides a extremely accurate timing source; therefore, TIMING SELECT is normally RB STD.

(d) If TEDs are used, the BSC source must be specified.

NOTE: For its doctrinal application, the TED will receive its BSC from the Tropo Modem carrying its group.

(6) AN/TSC-85B. The planner must specify the timing source for the shelter. The AN/TSC-85B can operate in:

(a) MASTER mode using the crystal oscillator in the TSSP.

(b) External Standard/CNCE (EXT STD/CNCE) mode deriving timing from one of the incoming DTGs.

(c) SLAVE mode deriving timing from the radio.

(7) AN/TSC-93B

(a) The planner must specify the timing source for the shelter. The AN/TSC-93B can operate in:

1. MASTER mode using the crystal oscillator in the TSSP.

2. External Standard/CNCE (EXT STD/CNCE) deriving timing from one of the incoming DTGs.

3. SLAVE mode deriving timing from the radio.

NOTE: If an atomic standard timing source is available, use EXT STD/CNCE for one terminal and SLAVE mode for others. For example, the AN/TSC-85B in HUB configuration would be connected to a AN/TTC-39 series CS. The AN/TSC-85B would use EXT STD/CNCE to derive timing from the AN/TTC-39 series, and the AN/TSC-93B spoke terminals would use SLAVE timing from the radio system. If no atomic standard timing source is available, the HUB would operate in MASTER mode, and the spokes would operate in SLAVE mode.

(b) If the TRI-TAC port is used, the planner must specify the number of cable reels between the AN/TSC-93B and the other terminal.

(c) If the user port is used, the planner must specify the data rate (16 or 32 Kbps) and the demultiplex port, which gets the user channel.

(d) The modulation type must be specified. These data are provided in the GMF Access Message.

(INTENTIONALLY BLANK)