A Solution to the Inherent List on Nimitz Class Aircraft Carriers

by

Dianna Wolfson

B.S. Marine Engineering Systems, United States Merchant Marine Academy, 1996

Submitted to the Departments of Ocean Engineering and Civil and Environmental Engineering
in Partial Fulfillment of the Requirements for the Degrees of

Naval Engineer
and
Master of Science in Civil and Environmental Engineering

at the
Massachusetts Institute of Technology
June 2004

© 2004 Dianna Wolfson
All rights reserved

The author hereby grants MIT and the U.S. Government permission to reproduce and to distribute publicly paper and electronic copies of this thesis document in whole or in part.

Author .....
Department of Ocean Engineering and the
Department of Civil and Environmental Engineering
May 07, 2004

Certified by .....
David V. Burke, Senior Lecturer
Department of Ocean Engineering
Thesis Supervisor

Certified by .....
Eduardo Kausel, Professor of Civil and Environmental Engineering
Department of Civil and Environmental Engineering
Thesis Reader

Accepted by .....
Heidi Nepf, Associate Professor of Civil and Environmental Engineering
Chairman, Departmental Committee on Graduate Studies
Department of Civil and Environmental Engineering

Accepted by .....
Michael S. Triantafyllou, Professor of Ocean Engineering
Chairman, Departmental Committee on Graduate Studies
Department of Ocean Engineering

BEST AVAILABLE COPY

DISTRIBUTION STATEMENT A
Approved for Public Release
Distribution Unlimited

20040901 104

PAGE INTENTIONALLY LEFT BLANK

A Solution to the Inherent List on Nimitz Class Aircraft Carriers

by

Dianna Wolfson

Submitted to the Departments of Ocean Engineering and
Civil and Environmental Engineering
on May 07, 2004, in partial fulfillment of the
Requirements for the degrees of
Naval Engineer
and
Master of Science in Civil and Environmental Engineering

Abstract

Nimitz class aircraft carriers possess an inherent list to starboard that their list control systems (LCS) are typically unable to correct while under Combat Load Conditions. As a result, it has become necessary to use fresh water ballast in a number of inner bottom voids and damage control voids to augment the LCS. Maintaining liquid ballast in damage control voids is unacceptable, as it reduces the design counter flooding capability of the ship, and thus reduces ship survivability. In order to restore the ships operational flexibility and achieve the necessary/desired list correction, this study determines the effect of adding solid ballast to a series of voids/tanks identified on the 2nd, 4th, and 8th decks.

Based on ballast density, tank location and capacity, ease of ballast installation, minor tank structural modifications, and a decision making cost analysis, solid ballast was determined to be the most advantageous for use in correcting the inherent list on the Nimitz class aircraft carriers. Fresh water ballast was also examined as a possible alternative, but not as extensively due to the large quantity of water required and its limited ability to achieve a list correction.

Nimitz class aircraft carriers currently have an average list of 1.5 degrees and a KG of 47 feet. Since their allowable KG cannot exceed 48.5 feet, the average service life allowance (SLA) for KG is approximately 1.5 feet. This study shows that by adding approximately 400 lton of solid ballast, list can be corrected by 1.5 degrees with only a 0.1 percent increase in KG. Thus, to permanently fix the average Nimitz class aircraft carrier starboard list, there would be a 0.05 foot increase in KG, which in all cases is within the SLA. Additionally, this study shows that this 1.5 degree list correction can be accomplished at a low cost of approximately $1,200 per lton. Considering the reduction in operational constraints and the benefits to ship survivability, this is truly an inexpensive proposition.

Thesis Supervisor: David V. Burke
Title: Senior Lecturer

Thesis Reader: Eduardo Kausel
Title: Professor of Civil and Environmental Engineering

Acknowledgements

I would like to thank CDR Kevin Terry who contacted MIT with a project proposal to find an advantageous and cost effective solution for fixing the inherent list on the Nimitz class aircraft carriers. Without his support, this thesis would not have been possible.

Throughout the course of this project, many individuals from various organizations provided invaluable operational and technical assistance. I would like to take this opportunity to thank everyone for their contributions and advice. I would also like to thank my husband for his friendship, love, and encouragement over the past three years and always.

NAVSEA
- CDR Kevin Terry
- CAPT (ret.) Chuck Bush
- CAPT T. Moore
- CAPT James Murdoch
- Dominick Cimino
- Roger M. Nutting
- Evelisse Martir
- Weldon Gimbel
- LCDR Brian Lawerence
- LCDR Rick Thiel

Bath Iron Works
- John Grostick
- Lew Pratt
- Allen Pac
- Ray Lacour
- LCDR Michael Taylor

CVN Ships
- LCDR Charlie Strassle (DCA, CVN 69)
- CDR Robert Finely (Cheng, CVN 71)
- LCDR Peter Pasquale (DCA, CVN 71)
- LCDR John Rickards (DCA, CVN 72)
- LCDR Scott Noe (DCA, CVN 76)
- CDR Glenn Hofert (Cheng, CVN 76)

Massachusetts Institute of Technology
- Dr. David V. Burke
- CDR (ret.) John Amy
- CDR Timothy McCoy

NGC - Newport News Shipbuilding
- Jerry Dudley
- Hal McCaskill

NSWC Carderock
- John M. Rosborough
- Carlos R. Corretjer
- Charlie Snelling
- Bruce Winterstein
- Todd Heidenreich

PCCI, Inc.
- John A. "Tony" Kupersmith
- Jessica R. Coles

Herbert Engineering Corporation
- Colin Moore

Norfolk Naval Shipyard
- Walt Delong
- Larry Back

Ballast Technologies, Inc.
- Mark Ensio

N.S. NAPPI Associates
- Nat Nappi, Sr.

Please accept my apologies if I have left someone off this list.

Table of Contents

Abstract 3
Acknowledgements 4
Table of Contents 5
List of Figures 6
List of Tables 6
List of Appendices 6
1.0 Introduction 7
1.0 Introduction 7
1.1 Motivation 7
1.2 Background 7
1.2.1 Past Research 10
1.2.2 Stability 10
1.2.3 Survivability 13
1.2.4 Displacement Limits 14
1.2.5 KG Limits 14
1.3 Present Options 15
1.3.1 Continue to operate using inner bottom and DC voids 15
1.3.2 Add a list control tank on the port side 17
1.3.3 Move or exchange compartment spaces 18
1.3.4 Convert a current DC void(s) to a JP-5 tank(s) and pump last 18
1.3.5 Future ship alterations and modifications 18
1.3.6 Re-examine current List Control System 19
1.3.7 Ballast Addition 21
1.3.7.1 Water Ballast 21
1.3.7.2 Solid Ballast 21
1.4 Option Selection 23
2.0 Preliminary Analysis and Results 23
2.1 Tank Selection 24
2.2 Modeling Analysis Performed 25
2.3 Preliminary Decision-Making Cost Estimation 31
2.4 Structural Analysis 35
2.4.1 Structural Modifications 39
2.4.1.1 Modifications to the 2nd Deck 39
2.4.1.2 Modifications to the 4th Deck 41
2.4.1.3 Modifications to the 8th Deck 43
3.0 Final Analysis and Results 44
3.1 Final POSSE Results 45
3.2 Final Cost Estimation 46
3.2.1 Ease of Removal 48
3.2.2 Evidence Perma Ballast® is non-corrosive 48
4.0 Conclusion 50
5.0 Recommendations 51
References 53

List of Figures

Figure 1: Stresses in rectangular plates under uniform lateral pressure [2] 38
Figure 2: 2nd Deck Compartment 2-165-8-V 39
Figure 3: 2nd Deck Compartment 2-165-8-V, transverse section 41
Figure 4: 4th Deck Compartment 4-165-4-V 42
Figure 5: 8th Deck Compartment 8-225-6-V 43

List of Tables

Table 1: CVN 68 Class Delivery Data and Class Predictions as of 11/17/03 8
Table 2: Deck Location Cost Comparison 32
Table 3: Required Structural Modifications for 2-165-8-V 40
Table 4: Required Structural Modifications for 4-165-4-V 42
Table 5: Required Structural Modifications for 8-225-6-V 44
Table 6: Final Cost, Weight Addition, and Change in KG Comparison 47

List of Appendices

Appendix A: Tank Location Study 54
Appendix B: Preliminary POSSE Modeling Results 58
Appendix C: Preliminary Cost Estimation Data and Worksheets 62
Appendix D: Preliminary Cost Comparison 86
Appendix E: Complete Structural Analysis 88
Appendix F: Final POSSE Modeling Results 148
Appendix G: Final Cost Estimation Data and Worksheets 150

1.0 Introduction

1.1 Motivation

Aircraft carriers are the largest combatant ships in the world. They are huge floating cities, carrying thousands of sailors and aircraft, each vessel with more military power than many nations. But with such might comes mighty operational requirements.

In order to launch and recover aircraft on the flight deck, most ships will report any change in list in excess of ¼ degree to the Engineering Officer of the Watch (EOOW) for correction. The Nimitz class aircraft carrier was designed to maintain a level deck during flight operations through the utilization of the LCS. The LCS is designed to compensate for the operational effects of aircraft movement on the flight deck and in the hangar bays and not intended to compensate for an inherent list. Any inherent list imposes operational constraints on the ship, particularly when the carrier has embarked a full air-wing and full fuel loading (Combat Load Condition). Nimitz class carriers have a history of inherent starboard list, due primarily to the ship's configuration. History shows that modifications to the Nimitz class are have increased the inherent starboard list of each carrier. This thesis will explore various options for finding a permanent solution to the Nimitz class list control issues, particularly, the installation of solid ballast to counter list.

1.2 Background

There are a number of obstacles in finding a permanent solution for the inherent list associated with most Nimitz class carriers, as each carrier has a different inherent list associated with it. This may sound strange, but every ship is slightly different. The ships are so large and have such a high procurement cost that only one is built at a time. It takes an average of five years to build one carrier, and in that time, modernizations, upgrades, and improvements are

introduced into the design. As such, the ships are constantly changing and evolving, all within the same skin designed in the late 1960's. A comparative analysis of the commissioned and predicted current displacement, vertical center of gravity (KG), and list with the latest unknown growth corrections for the Nimitz class aircraft carriers are shown in Table 1.

Table 1: CVN 68 Class Delivery Data and Class Predictions as of 11/17/03

Ship	Delivery Displacement (ltons)	Predicted Current Displacement (ltons)	Delivery KG (ft)	Predicted Current KG (ft)	Delivery List (degrees)	Predicted Current List (degrees)
68	93,283	100,064	45.73	47.22	1.01(S)	0.10 (S)
69	93,832	100,588	45.94	47.1	0.82 (S)	0.25 (S)
70	94,069	100,599	46.29	47.28	1.22 (S)	0.11 (P)
71	96,865	103,700	46.4	47.27	0.27 (S)	0.41 (S)
72	97,497	103,912	46.61	47.2	0.77 (S)	1.81 (S)
73	97,816	104,095	46.54	47.03	0.85 (S)	1.55 (S)
74	97,490	103,419	46.63	47.23	1.63 (S)	2.54 (S)
75	97,944	103,863	46.4	46.93	0.43 (S)	1.61 (S)
76	97,953	101,187	46.66	46.77	0.08 (S)	0.99 (S)

Nimitz class carrier contracts require that an Accepted Weight Estimate (AWE) be negotiated between the Contractor and the Government. A starboard inherent list was seen creeping upwards through CVN 73, such that for the CVN 74/75 contract, the program office invoked a list tolerance of 0.50 degree (P/S) for the combat load condition. As a result of this new requirement, and beginning with the CVN 74/75 contract, the Navy and the contractor agreed to include 850 long tons of contractor-controlled ballast in the AWE to offset the already projected design inherent starboard list. Before any real ballast was to be added on CVN 74, however, the program office wanted to see if there was indeed a list problem after the ship was delivered and fully loaded. It is at this time that CVN 74 was found to a have real inherent starboard list problem. The identified list problem was resolved by the use of fresh water (FW) ballast. To date, permanent ballast has not been installed on any aircraft carrier of the Nimitz

class. Changes to the CVN 76 design resulted in a reduced starboard list and consequently the contractor-controlled ballast included in the AWE was reduced to 650 long tons.

From operational experience, it would be safe to say that there is an inherent starboard list under full fuel load (or virtually full) with the airwing embarked and no flight operations being conducted on most Nimitz class carriers. When all the planes are stacked on the starboard side and the ship has just been refueled, the LCS is unable to level the deck. This is when it has become necessary for some carriers to use fresh water ballast in a number of inner bottom voids and damage control (DC) voids to correct the adverse list condition. But from a ship survivability standpoint, and as their name implies, DC voids are not an acceptable list control measure under normal operating conditions. Maintaining liquid ballast in DC voids reduces the design counter flooding capability of the ship. None the less, this is how some ships operate in order to keep the Nimitz class ships at sea.

In February 1999, PEO Carriers issued a Message to the CVN 68 Class identifying several voids (i.e., non DC voids) that could be used for FW ballasting for ships experiencing list control problems. Prior to using those voids, however, the message requested the ships to confirm that the list control difficulties were not the result of abnormal LCS operations or adverse liquid loading or stores management. Carriers experiencing list control difficulties were to request approval from the Type Commander (TYCOM) to fill the voids listed in the message. The approval would remain in effect for that ship until a permanent solution was identified and implemented.

It is obvious that fixing the inherent list cannot be solved by leaving aircraft behind or by limiting the load of fuel carried. TYCOM directive states that the JP-5 system is required to

remain at least 60% full at all times. These ships have a very specific warfighting requirement that must be achieved, and a reduction in capabilities is unacceptable.

There must be a solution to the inherent list problem beyond limiting ships payload or using the DC voids outside of their designed intent. This report evaluates other alternatives to finding a solution to fix the inherent list on Nimitz class aircraft carriers.

1.2.1 Past Research

A thesis was performed in 2001 by Michael Malone, a graduate of MIT. His thesis, titled "An Alternate Method for the Determination of Aircraft Carrier Limiting Displacement for Strength;" determined that although all Nimitz class aircraft carriers are approaching their limiting displacement for strength, the traditional methods of such calculations are conservative. In fact, the Nimitz class carriers can accommodate more weight than previously thought. Because of this thesis, the U.S. Navy Aircraft Carrier Program Office (PMS 312) later directed N.S. NAPPI Associates to conduct a detailed analysis on estimating the limiting displacement for strength. Again, it was proven that the Nimitz class hull is capable of sustaining additional weights which would exceed the current established limiting displacement for strength.

1.2.2 Stability

The stability status for USN ships is defined in [4] and is supported by [11]. The Chief of Naval Operations has directed that the Navy's ships will be kept within naval architectural limits to ensure that essential survivability features are maintained. For each ship class, the Naval Sea Systems Command's Weights and Stability Division is to keep track of the weight and stability status, limiting draft and other limitations including being an advocate for weight and moment status and moment compensation necessary to adhere to the established limits. Surface ships are

classified into four status conditions for vertical center of gravity (KG) and limiting drafts. As specified in [4], the definitions for the status listings are:

- STATUS 1 An increase in weight and a rise of the ship's center of gravity are acceptable. Added weight and moment resulting from changes will not require any compensation unless the magnitude of the additions is so large as to make the ship approach stability limits.

- STATUS 2 Neither an increase in weight nor a rise of a ship's center of gravity can be accepted.

- STATUS 3 An increase in the ship's weight is acceptable, but a rise of the ship's center of gravity must be avoided.

- STATUS 4 A rise of the ship's center of gravity is acceptable, but increase in weight must be avoided. Compensation for added weight may be obtained by removal of an equal or greater weight at any level.

Status 1 is the only acceptable ship status. The goal is for ships in the fleet to remain in Status 1. In the other three status conditions, the displacement and KG must be closely monitored to ensure the condition does not worsen and steps must be taken to try to bring the ship back within acceptable design limits. Typically, when an in-service carrier requires a modification that will add weight to the ship, it is the responsibility of the program office and the planning yard to put together a package that includes maintenance and repair items, as well as modernization changes. First, a preliminary weight estimate of the modernization changes are put together in the package and made ready for installation. Once the package is installed, the planning yard or shipyard keeps track of the weights being installed. At the end of the availability, an actual weight report for the installed changes is generated. This report is passed from the shipyard to the program office where it is incorporated into the stability baseline of the pertinent ship.

For any configuration changes, such as adding weight to a carrier in Stability Status 2, the interested party fills out a Justification Cost Form (JCF) with the weight and KG impact as well as the ship's Stability Status. A Configuration Control Board that includes the Program Office, the Ship Design Manager, and the necessary Technical Authorities then meet to approve or disapprove the modification. If approved, an Engineering Change Proposal (ECP) for newly commissioned ships or a Ship Alteration Request (SAR) for in-service ships is then generated.

The Nimitz class was assigned to Stability Status 2 by the Weight Control and Stability Division of the Naval Sea Systems Command. This was done as a result of the stability re-analysis performed on the Nimitz class carriers. The re-analysis revealed the following:

- The originally calculated Allowable KG of 48.50 feet was no longer applicable for this class of ships. While 48.50 feet is no longer the allowable KG value, it continues to be the KG comparator for CVN 68 – 77 for contractual reasons.
- The actual damage capability of this class of carriers is not as originally calculated.
- The damage capability of this class decreases as displacement increases.
- It is important for the holding bulkhead to remain intact.
- The 40'-11" limiting draft is based on ship geometry limitations.

  As a result of the above study, it was determined by that a stability status of 2 should continue to be assigned to the Nimitz class in order to:

  - Control the displacement growth of the class even though some ships are substantially below the displacement associated with the limiting draft. This is an acknowledgement that an increased displacement degrades damage stability capability.

- Control the KG growth of the class even though some ships were substantially below the KG comparator of 48.50 feet. This is an acknowledgement that an increased KG degrades damage stability capability.

1.2.3 Survivability

Survivability is defined in [10] as the capacity of a ship to absorb damage and maintain mission integrity. Typically, most decision making regarding survivability is done during the early trade-off stages of ship design. As a result, it is imperative that naval architectural parameters be considered over the lifetime of the ship in order to successfully withstand designated threat levels. Every attempt must be made to prevent any degradation of a warship's ability to perform its offensive mission, sustain battle damage, and survive. Aircraft carriers are further defined in [10] as 'capital ships' in that they are expected to survive more than one weapons hit and return to some level of mission capability. All other ships are only expected to survive design level damage from a single design level weapon or a single peacetime hazard.

Survivability, weapons effects and operational environments are categorized in terms of three levels of severity. Level I represents the least severe environment anticipated for a class of ship, while Level III represents the most severe environment projected for a combatant battle group and includes their ability to deal with the broad degrading effects of damage from anti-ship cruise missiles (ASCM). Aircraft carriers and battle force surface combatants are both considered Level III. Therefore, it is imperative that these ships be operated and maintained as they were designed. Any digression from operational restrictions and guidelines makes all analyses irrelevant.

1.2.4 Displacement Limits

Because these aircraft carriers are so important and because any reduction in freeboard will inherently reduce the effectiveness of the torpedo side protection system (TSPS), these ships are usually displacement critical. The limit is typically expressed in terms of the Full Load Condition. Following is the criteria Naval Surface Warfare Center (NSWC) Carderock's Weight Control and Stability Division uses to determine displacement limits for aircraft carriers with a TSPS:

- Strength: The displacement, with an assumed longitudinal weight distribution, at which the longitudinal bending moments caused by a standardized wave will produce the maximum allowable stress in the ship's hull girder.

- Speed: The displacement for surface warships at which the ships machinery, operating at a specified percent of maximum available power, will drive the ship at the original design speed specified by the ships characteristics considering power plant, RPM and torque limits.

- TSPS: The maximum draft for a surface warship which prevents the top of the TSPS from being immersed more than a specified amount.

- Subdivision: The maximum displacement at which a ship with a TSPS will satisfactorily resist the flooding effects of a specified number of torpedo hits or similar weapons without submerging the margin line at the bow or the stern.

- Damage Stability: The maximum displacement at which a ship with a TSPS will satisfactorily resist the flooding effects of a specified number of torpedo hits or similar weapons while providing adequate stability to resist high static heel angles, resist capsizing, and return to some level of mission capability.

1.2.5 KG Limits

The KG Limit for a warship is the maximum height of the vertical center of gravity of the ship in the Full Load condition. Any Full Load KG below this limit is expected to survive the hazards of wind, high speed maneuvering or damage, assuming the ship follows its liquid loading instructions. The Limiting KG is the lowest limit of either the damage stability limit or

the intact stability limit. Following is the DDS-079-1 criteria NSWC Carderock's Weight Control and Stability Division uses to determine stability limits for surface warships with a SPS:

- Intact: 100 Knot Beam Wind - The Full Load KG which will permit the ship to operate in any normal loading condition and survive the heeling force of a fully developed hurricane (assumed as a nominal 100 knots). The ship will retain sufficient stability to absorb higher gusts without being knocked over, and to absorb the dynamic effects of wave action without being rolled over.

- Damage: The Full Load KG Limit for large surface combatants, such as battleships and aircraft carriers which have a side protective system, is associated with the worst possible combination of a specified number of hazards (torpedoes/missiles) which will:
  1) Cause the ship to heel to a large initial angle of 15 - 20 degrees,
  2) Cause the ship to approach a capsize situation, or
  3) Exceed the counter flooding capability to return to limited operation. Limited operation is defined as a heel of less than 5 degrees to operate aircraft (should be 3 degrees for current aircraft) or less than 10 degrees to operate the main turrets.

In any of the above damage conditions the ship must still possess sufficient dynamic stability to resist capsizing moments induced by wind and waves.

1.3 Present Options

1.3.1 Continue to operate using inner bottom and DC voids

Any departure from proper design and operational criteria degrades any analysis performed. For example, most stability analyses performed assumes that DC voids are used correctly, the ship is on an even keel, and that the limiting displacement is not exceeded. In fact, there is an interrelationship between increasing displacement and a number of factors, to include ship strength, survivability, stability and seakeeping. Increasing the weight, or displacement, of carriers is a serious concern because any weight increase only serves to reduce the service life of the ship. It should be noted again that not all carriers use DC voids to augment the LCS, but it is also uncertain as to how many actually will use them as a last resort.

DC void usage results in a reduction in TSPS defense. The purpose of the TSPS on any capital ship is to protect the vital spaces of the ship against flooding and/or detonation of stowed

ordnance. Vital spaces include magazine and propulsion system spaces. The TSPS provides the desired protection by being constructed of a series of longitudinal bulkheads nested transversely. These longitudinal spaces are further subdivided by transverse fluid-tight bulkheads creating a 'honeycomb' arrangement outboard of the vital magazines and machinery spaces. The spaces thus created between the bulkheads are alternately filled with liquids (fuel oil, JP-5, ballast water, etc.) or are left empty (damage control voids). The passive protection afforded by this combination of bulkheads and 'liquid/air layers" serves to absorb, deflect and reject the explosive force generated by weapons such as torpedoes or mines. Placing liquid in the void layer combined with an empty liquid layer will be the worst-case scenario, while one or the other will result in less of a reduction.

Similarly, DC voids are supposed to be used exactly as their name implies, to combat flooding with the ability to adjust for list and trim in order to continue to fulfill mission objectives after sustained damage by being able to continue to launch and recover aircraft. The specified primary purpose of the DC voids is for damage control. Sea chests and valves for flooding underwater side protection system spaces (DC voids) are required to flood within six minutes to fill the space to within 1 foot of the full load waterline per section 529i of [6]. In fact, current stability criteria require that the ship be able to counter flood to return the flight deck to within 5 degrees of upright after damage. When a ship has to resort to maintaining list by flooding DC voids, the crew becomes encumbered by a task that should be unnecessary. The Damage Control Assistant (DCA) and EOOW are drawn away from their normal tasks and into roles as reactionary problem-solvers, keeping an eye on flight deck aircraft placements, fuel tank levels, and ship list. This is a poor utilization of manpower, considering the primary duties of the DCA and EOOW, which are the coordination of damage control actions and the responsibility

for ships propulsion, respectively. Also, a ship's crew is continuously rotating. As a result, there is a continual learning curve that relies on the passage of operational knowledge from generation to generation. This is not the optimal way to operate a multi-billion dollar asset, and it is in our best interest to not put the onus of correcting an evolutionary design fault on a crew who will serve at most a three year tour. Additionally, de-ballasting DC voids is extremely time intensive. If a real casualty was to occur with the wrong or too many DC voids flooded, there may not be sufficient time to correct the condition. It is not hard to imagine the disastrous results possible.

1.3.2 Add a list control tank on the port side

The control of permanent lists (static heel angles) by adding an additional list control tank of the port side could also be considered an option. The LCS is designed to compensate for variable lists generated by load items that are moved about the ship over short periods of time. Such loads could be liquids, cargo, stores, vehicles or aircraft. The current Nimitz class LCS consists of ten list control tanks, two centrifugal pumps each rated at 1800 gpm at 30 psi, and the associated piping and valves required to compensate for lists up to 1.5 degrees in 20 minutes. The system is designed to be filled with seawater (SW) or firemain to 50% of its total capacity of 278,533 gallons. This allows tanks to be filled to 100% on one side while the other side is left empty.

The problems encountered with using SW in tanks may be common knowledge to most people; however, potential corrosion from using salt water has encouraged some carriers to use potable water (PW) as a means to fill their list control tanks. The LCS is designed with PW as a back-up to using SW or firemain. This is advantageous for corrosion issues, but can be a problem for PW inventory. Any leaks in the system or maintenance requiring system fill and

drain could use a large amount of PW. When underway, potable water conservation is of primary importance.

1.3.3 Move or exchange compartment spaces

Another option is to move or exchange compartment spaces, such as relocating heavy equipment on the starboard side to the port side and vice versa. The reduction of starboard moment by the removal or relocation of items of lightship weight would reduce the quantity of ballast required, but would be very small by comparison to the amount of permanent ballast required. In order to achieve the necessary list corrections, an enormous amount of weight would have to be relocated. The costs involved with such an undertaking would be extremely high.

1.3.4 Convert a current DC void(s) to a JP-5 tank(s) and pump last

Converting portside DC floodable voids into fuel tanks is also an option. This option will add to the overall weight of the ship and again a reduction in TSPS capability becomes a large concern as liquid is being placed in the air layer and thus opening a window of vulnerability.

1.3.5 Future ship alterations and modifications

It is also possible that future modifications to the Nimitz class aircraft carrier will serve to provide a port list, thereby reducing the inherent starboard list. Modifications such as replacing the existing Nimitz class starboard island with the new modified CVN 76 island could serve to reduce the starboard list. In fact, CVN 76 has had so many design changes that its starboard inherent list is less than one degree, currently based on preliminary results of its inclining experiment. List for CVN 76 has not been an issue thus far, however, at the time feedback was gained, the ship had not been fully loaded out. CVN 76 is slightly different from the other Nimitz class ships. The weapons elevator is combined into the main structure and the aft mast is

combined with the island which is one level shorter. There is also a more realistic protection scheme such that a space armor concept was employed. On the older islands, such as CVN 73, Level III protection can be seen throughout the entire island. This includes 40# (1") plating, whereas the new CVN 76 island has Level II protection in some areas and is thus lighter.

Another option could be to extend the port side flight deck on the old Nimitz class, as was done on CVN 76. This allowed for more operational flexibility as the forward port jet blast deflector can now be used to its full extent. In any case, it is important to note that any number of ship alterations could be made when time and money become available in the future.

1.3.6 Re-examine current List Control System

Fleet feedback was taken into consideration when performing this study. The design of the current LCS reportedly requires extensive manpower for operations, possesses obsolete components, and is not integrated with other shipboard liquid-movement functions. The installed LCS consists of 10 tanks, 2 pumps and 14 associated valves to distribute seawater ballast as required compensating for lists up to 1.5 degrees. The manually controlled system uses verbal communications and associated sailor actions for operation.

Much of the fleet feedback received noted that the current LCS provides sufficient control when the inherent starboard list has been corrected. The fleet also noted, however, that if correction has not been provided, the LCS alone does not provide ample list correction while at full combat load (average displacement between 98,000 and 100,000 ltons, mean draft approximately between 38'10" and 39'10", even liquid distribution, and standard spotting of aircraft for flight operations). Standard spotting includes F-18s on the 1 and 4 row, hummers (fleet jargon for the E-2C Hawkeye) in the hummer hole, F-14s on the stern of the flight deck,

helicopters and C-2 Greyhounds inboard of the island, cranes aft of the island, and the rest of the aircraft dispersed between them.

The LCS is currently being automated via the Automated List Control System alteration (ALCS 9145K). The ALCS provides remote control and monitoring of the aircraft carrier LCS from Damage Control Central (DCC) and Shaft Alley via a flat panel display. Four existing loop valves are upgraded from manual to motor operated and are integrated into the control system. Existing pump controllers are replaced and control of pumps, valves and tank level monitoring are integrated into a single system with redundant capabilities. The ALCS utilizes commercial-off-the-shelf components and Navy-owned software to decrease the manpower needed for operation and maintenance, increase automation, reduce life cycle costs and significantly improve system reliability. System line-up and tank management is automated and managed such that tanks can be filled faster, utilizing fewer watchstanders and increasing system efficiency. Control and monitoring of the LCS is performed from two human-machine interface (HMI) stations: one in DCC and one in Shaft Alley. The system can also be operated from the Central Control Station, and operates in both remote and semi-automatic modes.

Very little feedback has been obtained regarding the new ALCS and its improvements to overall ship operations. To date, installation has been completed on three of the ten planned carriers. Although the system provides the means to automatically operate pumps and valves, the capacity of the system has not been changed. To really affect the starboard inherent list, more ballasting is going to be required. Once the inherent starboard list is fixed, the ALCS will be extremely advantageous to overall carrier operations.

1.3.7 Ballast Addition

1.3.7.1 Water Ballast

Special preparation would be required for all tanks or voids using locked-in water ballast to correct the starboard inherent list. The sponson voids, in particular, are coated with epoxy over an inorganic zinc primer; this is suitable for installation of water ballast, but only for a period of up to five years if it is intact. Preparation of the sponson voids for installation of water would require inspection and possibly repair of the existing coating systems. Another problem with using water as a source of ballast is that it is difficult to provide a sufficient amount of water ballast in a space judicious manner in order to provide enough permanent list correction. Although water is an inexpensive material, utilities would have to be relocated to other spaces and the tanks themselves cannot be partially filled.

1.3.7.2 Solid Ballast

For purposes of this project, lead was not considered as an option due to the tremendous handling expenses and associated carcinogenic problems. Instead, a pumpable slurry of iron-ore, known as Perma Ballast®, was examined as a possible source of solid ballast. Ballast Technologies Inc. (BTI) has been a provider and installer of Perma Ballast® since 1983. Their product is widely acknowledged to be the quickest and most cost-effective method of ballast installation. All materials, including the fluid used to install the ballast, are naturally occurring, nontoxic, non-corrosive and environmentally safe. No gases or vapors are generated and no special handling is required upon installation or removal.

Minimal vessel modification is required to the ship, thereby providing savings to the shipyard. Jobs are not generally subcontracted out, thereby cutting out the middle man and making this product more competitive. Prior to installation, engineers and key personnel inspect

the vessel to be ballasted and its location. Requirements such as electrical, water, compressed air, and equipment location are assessed. BTI engineers then submit engineered drawings noting location of equipment and diagrams of the installation system along with a written operating plan for the project. BTI uses its own experienced personnel and equipment during ballast installations to ensure safe, rapid and efficient mobilization, installation, and demobilization.

BTI's ballast materials are mixed with water and pumped to the vessel via a combination of rigid and flexible pipes. The slurry is pumped in at a controlled velocity in order to assure an even distribution of the ballast around projections, pipe, and other objects, leaving no voids. Excess water is removed as the ballast is installed and settles. This ensures that the in-place, fixed ballast is a dense mass which will not move or shift. Due to BTI's materials and placement method, no special handling or tank modifications are required.

BTI pretests materials in its laboratory to ensure proper density and uniformity. Continuous testing is performed during ballast installation to verify installed density. Densities of materials range from 150lb/ft^3 to 350lb/ft^3. All processes and materials used by BTI are approved by ASTM, ABS, MARAD, U.S. Navy, U.S. Coast Guard, Del Norske Veritas, and Lloyds. In fact, Perma Ballast® has already been installed on a number of naval vessels, particularly DDG 73, 76, and 77. The reason for installation was to correct a Flight II starboard list. Feedback obtained from these installations described the process as being very smooth and extremely successful.

There are a number of advantages to using this Perma Ballast®. It is possible that Perma Ballast® will absorb shock over a limited area and serve to dampen it. Although the individual particles and the water are incompressible, the Perma Ballast® bed is made up of many very small particles which are not bound together by anything except gravity. There is approximately

2% entrained air (by volume) in the slurry. Some of this air probably remains in the slurry after settling so it would be fair to say that Perma Ballast® contains about 1-2% (by volume) compressible components. Water is removed as the material settles, but even after the Perma Ballast® settles, all of the voids between particles are filled by water. In fact, a settled bed of Perma Ballast® is an extremely effective barrier against permeation of oxygen - either into the bed or through it.

1.4 Option Selection

From the options presented above, the choice was made to use solid ballast to correct the starboard inherent list on the Nimitz class carriers. Based on ballast density, tank location and capacity, ease of ballast installation, minor tank structural modifications, and a decision making cost analysis, the Perma Ballast® appears to be the best option for use in correcting the inherent list on the Nimitz class aircraft carriers and is discussed extensively in Chapter 2.

2.0 Preliminary Analysis and Results

Preliminary analysis began with tank selection to serve as input to the Program of Ship Salvage and Engineering (POSSE) computer analysis program, discussed later in section 2.2. Once tanks were selected for ballasting, a naval architectural analysis using POSSE was performed for 36 scenarios to determine list corrections. These scenarios encompassed ballasting on the 2nd, 4th, and 8th decks with 200 lb/ft^3 and 325 lb/ft^3 density ballast. Fresh water was also examined as a possible alternative, but not as extensively as the solid ballast option. Once a complete set of data was obtained, a decision making cost analysis was performed. This cost estimation analysis proved that the 200 lb/ft^3 density ballast was the best option. As a result, all structural analysis was performed using the 200 lb/ft^3 density ballast. Once the structural analysis was complete, modeling had to be performed again using POSSE. In some cases, a

minimum ballast weight was calculated for a particular set of tanks for the prescribed design criteria. Analysis had to then be performed again in POSSE with these new ballast weights. Similarly, some of the structural analysis revealed that stiffening was required for plating in some of the tank bulkheads. This required another cost assessment be performed in order to achieve accurate cost estimations. So, one can see that this project followed a design spiral towards to determining the most cost effective and advantageous solid ballasting solution for correcting the inherent list on the Nimitz class carriers.

2.1 Tank Selection

Tanks selection was based on location and those that were available for ballasting based on Nimitz class carrier drawings. As mentioned previously, ballasting was accomplished to relieve up to 3 degrees of list in half degree increments. 30 tanks, primarily in the aft/port voids, have been identified to accommodate the installation of Perma Ballast® with 200 lb/ft^3 and 325 lb/ft^3. There are 3 tanks or sponson voids on the 2nd deck, 16 tanks on the 4th deck, and 11 tanks on the 8th deck. The methodology utilized was as follows: to correct the most list possible using the least weight possible. For example, tanks could have been chosen in the order of fill that were further aft to assist in trim correction, but that does not provide the best list correction with the least weight addition. Trim was, however, taken into consideration such that any addition of ballast would not serve to increase the existing trim condition. As a result, all changes in trim are also closely monitored.

Included in Appendix A is a series of tables providing information on the effects that each tank would produce if the tank was individually filled to capacity in a combat load condition with fresh water as well as each of the two ballast density types, 200 lb/ft^3 and 325 lb/ft^3. This information includes:

- Tank name
- Tank volume
- Ballast type density
- Tank weight
- Initial KG
- Initial trim
- Initial weight
- Final KG
- Final trim
- Final weight
- Δ KG
- Δ trim
- Δ weight

2.2 Modeling Analysis Performed

POSSE was used to analyze the inherent list for the Nimitz class carrier. POSSE is a software package of modeling, naval architectural design tools, and intact loading and salvage analysis tools designed primarily for U.S. Navy salvage response. The Modeling and Naval Architecture modules are Microsoft DOS® applications packaged through a Windows interface called the Ship Project Editor. A plan is then developed so that the engineer can evaluate the ship in various conditions. The collection of conditions represents the steps in the plan to assess the status of the vessel. POSSE provides an efficient means to develop plans using a tree structure to allow a hierarchical definition that permits branching to investigate various potential solutions. Several branches can be developed and viewed concurrently. A condition represents a

particular state of the vessel. It includes all load and strength information associated with that state. For purposes of this thesis, only intact states were analyzed.

Aircraft carrier modeling in POSSE was too cumbersome to analyze for the original DOS version. In fact, any analysis prior to this thesis would have to been done in sections. With POSSE 4.0, the complete Microsoft Windows® version, the sections were able to be combined into a single ship project (.shp) file using the ship project editor. Once the CVN 68 Nimitz Class hull was put together, a weight ordinate was entered to adjust the lightship data so that it coincided with the most recent data available. It has been very difficult to determine the exact inherent list that each carrier exhibits when under combat load conditions due to the "unknown light ship (LS) growth" associated with each carrier and due to the lack of in-service inclining experiments performed on Nimitz class carriers. Unknown LS growth is used to term unattributable changes in displacement and centers of gravity over the ship's service life. Examples of unknown LS growth include but are not limited to: unauthorized alterations or installations of equipment, accumulations of paint, deck covering, dead cable runs, old foundations, undocumented configuration changes affecting weight and KG, and excess and obsolete repair parts, technical manuals, and paperwork. Naval Sea Systems Command's Weights and Stability Division has recently revised the unknown light ship (LS) weight and KG growth data for CVN 71 through CVN 75 based on re-evaluation of the results of the CVN 71 Actual Operating Condition (AOC) Weight Survey and Displacement Test and the CVN 68 Post-Refueling Complex Overhaul (RCOH) inclining experiment.

The CVN 68 inclining experiment was the first in-service inclining experiment of the NIMITZ class in 27 years. The CVN 71 displacement test determined the ships displacement and longitudinal, transverse but not vertical center of gravity. The CVN 68 post RCOH inclining

was successfully performed and the results are considered to be accurate. The results of the inclining show that the ship had an unknown lightship weight growth of 1,818 ltons and 0.47 feet of KG increase. The fully loaded condition was determined to have a displacement of 100,019 ltons with a KG of 47.21 feet. This provides 3,781 ltons (3.78%) and 1.29 feet KG service life allowance remaining when compared to the limiting displacement of 103,800 ltons and a KG comparator value of 48.50 feet.

The following changes were made to all stability baselines for CVN 71-75:

- CVN 71
  - Increase the current LS vertical center of gravity by 0.25 feet to account for the unknown LS KG growth.
- CVN 72-75
  - Revise the unknown LS weight growth to 2,333 long tons.
  - Locate the unknown LS weight growth at the following centers of gravity:
    - VCG = 60.5 ft
    - LCG = 72.47 ft (A)
    - TCG = 5.62 ft (P)

As a result of this unknown growth, an average Nimitz class carrier baseline condition was modeled in POSSE and used for all analyses. Lightship and Combat Load Condition data was obtained from the CVN 72 Weight and Moment Baseline Report. This report is based on:

1) CVN 68 post RCOH inclining experiment load out,

2) CVN 71 Actual Operating Condition (AOC) results,

3) CVN 73 Aircraft/JP-5 Revisions,

4) Scheduled Restricted Availabilities (SRAs) actually accomplished,

5) the latest estimates for next overhaul,

6) the latest Availability FY01 Planned Incremental Availability (PIA), and

7) LCS at 50%.

A Lightship Condition of 81,450.69 ltons and a Combat Load Condition of 104,263.10 ltons were obtained from the CVN 72 Weight and Moment Baseline report and used for modeling purposes. These values are from before the latest correction for unknown growth was applied. Included in Table 1 are the current CVN class predictions with the most recent unknown growth corrections applied. This is an extremely important chart because it shows each carrier's delivery data and class predictions for displacement, KG, and list.

The VCG, LCG, TCG, and volume of each tank being analyzed was then checked and modified if necessary to ensure accurate stability and analytical results. These naval architecture parameters were checked against the compartment and access database for CVN 70. Normally, one would use the ship's lines drawings and develop the hull up to the bulkhead and freeboard decks (i.e. the highest level to which there will be watertight/structural salvage operations). On the basis of this modeling, one checks the hydrostatics and curves of form against the builder's documents to determine if the hull has been modeled correctly. Any freely flooding area above the freeboard deck will generally be left off the hull model unless the deck is a strength deck (i.e. part of hull girder bending). The 2nd deck sponson voids had to be added to the model because they were not included previously and POSSE is normally only utilized to model what is inside the ship's hull. Builder's lines drawings were not used, however, because salvage and hydrostatic work was not needed for purposes of this project. Instead, weights and centers were input to model the CVN 72 data to determine and correct the ship's list. After careful accounting

of each tank's location was added, verified, or corrected, the file was imported into the POSSE program so that a combat load could be applied.

The combat load condition was then modified to reflect the current CVN 72 baseline combat load data mentioned previously as constants in the POSSE plan that was newly created. This includes a correction for:

1) crew and effects,

2) aviation ammunition,

3) ship ammunition,

4) provisions and stores,

5) general stores,

6) lube oil,

7) potable water,

8) reserve and emergency feed water,

9) oxygen and nitrogen production plant,

10) JP-5 aviation fuel,

11) gasoline,

12) aircraft,

13) aviation yellow gear,

14) aviation lube oil,

15) onboard discharge storage tanks, and

16) bilge and oily water.

Then, to reflect CVN 71 AOC results, a miscellaneous weight correction factor was added at the combat load condition TCG, VCG, and LCG. Now, the combat load condition was

accurate and ready for the creation of several variant conditions. Specifically, a condition for water ballast, high density ballast (325 lb/ft^3), and low density ballast (200 lb/ft^3) was created.

Included in Appendix B is a series of tables providing POSSE modeling results in a combat load condition for list correction in half degree increments up to 3 degrees for fresh water as well as each of the two ballast density types, 200 lb/ft^3 and 325 lb/ft^3. This information includes:

- Tank name
- Tank volume
- Ballast type density
- Tank weight

Degree Increment:

- Weight
- Percent change
- Δ KG
- Δ Trim

A 95% usable volume fraction was utilized for all calculations. This value provides for structural internals as well as for any utilities that may be running through the spaces. There are no losses due to compaction. According to the vendor, BTI, because the water is removed as the material settles, all of the voids between particles are filled by water and remain filled by water. It must be noted again, however, that a settled bed of Perma Ballast® is an extremely effective barrier against permeation of oxygen - either into the bed or through it.

2.3 Preliminary Decision-Making Cost Estimation

All decision making costing or "concept" estimation was performed by Norfolk Naval Shipyard's Structural Engineering and Planning Office (Code 256). This preliminary costing was performed prior to any structural analysis. It was presumed that one type of ballast or one location of ballast could be ruled out solely based on cost alone. As a result, a final cost analysis would still need to be performed after the structural analysis was completed. Cost estimation was performed for a combination of 36 scenarios on the 2nd, 4th, and 8th decks. A specific number of man-hours were allocated under each shop for jobs associated with the installation of Perma Ballast®. These jobs ranged from the opening and closing of voids to the preparing and painting of any additional structures. The cost estimation was broken down by man-hours and then converted to man-days. A total production cost was then derived from the man-days required for tank prepping the Perma Ballast® installation. Similarly, material production costs were calculated for prepping a typical void while additional material costs were additionally applied for canning plate installation on the 2nd deck. A canning plate, used to enclose only the required amount of ballast, would only be utilized in analysis of the 2nd deck because both the 4th and 8th decks are completely filled in all of the modeling scenarios. Any additional weight added due to the addition of internal structures or stiffening was also tabulated and tracked.

Because the 4th and 8th decks did not require canning plates, any costing associated with these decks involved limited material costs and fairly minor production costs. Much of the work associated with all the tanks includes:

- Opening and closing of tanks
- Touch-up painting
- Removal and reinstallation of accesses

- Testing of all accesses
- Removal and reinstallation of any interferences
- Patching and repair of deck coverings

It was assumed that the 2nd deck would require structural modifications due to thinner shell plating on the sponsons (compared to thicker hull shell plating found on the 8th deck voids). Two sponson voids were analyzed in depth for cost estimation purposes, 2-165-8-V and 2-180-6-V. All production and material costs were based on prepping and work on the entire tank. As a result, the 2nd deck void costs are much higher than the 4th and 8th deck voids due to their size. Similarly, a thumb rule was applied to the 2nd deck voids when filled to 95% and no canning pate work was required. The total structural work, for both production and material costs, is half the cost of the canning plate work. These cost estimates do not take into account relocation of existing utilities that may be running through the spaces. An analysis was performed, however, that determined that ballasting these selected tanks would have little, if any impact on the tanks, and that relocation of utilities would probably not be required.

Table 2 is an example cost comparison of the preliminary cost estimation results found. Production and material costs are the same regardless of the density of the ballast being used.

Table 2: Deck Location Cost Comparison

	2nd Deck		**4th Deck**	**8th Deck**
	2-165-8-V	2-180-6-V	All Voids	All Voids
Volume (ft^3)	3,969	6,273	approx. 600	approx. 1,000
Production Costs	$328,704	$525,958	$21,186	$21,186
Material Costs	$22,126	$35,402	$500	$500
Weight Added (lton)	4.71	7.54	0	0

All further costing calculations for the 2nd deck voids less than 95% filled were then performed as a percentage of the entire tank. For example, if a 2nd deck sponson void was to be filled 22%, then the corresponding voids production and material costs were multiplied by 22%. This was allowable because of the nature of the geometry of the 2nd deck voids as shown in Figure 1. Sponson void 2-165-8-V runs 60 feet long and sponson void 2-180-6-V runs 96 feet long. A detailed production and material cost breakdown for the 36 options mentioned is located in Appendix C. The worksheets used to perform these cost estimations are also located in Appendix C. A complete preliminary cost comparison was then performed for the 2nd, 4th, and 8th decks. This comparison provides the following:

- Total Cost
  - Production cost
  - Material cost
  - Perma Ballast® cost
- Total Weight (Ltons)
  - Material Weight
  - Perma Ballast® Weight
- Δ KG

This decision making cost comparison revealed that the 200 lb/ft^3 density Perma Ballast® was much more economical than the 325 lb/ft^3 density Perma Ballast®. It takes nearly the same amount of ballast to affect each incremental degree change on the same deck regardless if using the 200 lb/ft^3 or 325 lb/ft^3. Although the number of tanks required to ballast with 200 lb/ft^3 was higher, it was still more cost effective to use the 200 lb/ft^3 density ballast due to the price per lton of the 325 lb/ft^3 ballast. The 325 lb/ft^3 ballast has steel shot added to it to help achieve its high

density. It was also discovered at this early stage of analysis that for corrections at or beyond 1.5 degrees, the 2nd deck was a much better location for this ballast addition due to the lesser weight addition resulting from the larger moment arm generated by filling the 2nd deck voids. The costs associated with adding ballast to the 2nd deck is much higher, but the amount of ballast required is significantly less than that required for the 4th and 8th decks. For corrections less than 1.5 degrees, the 2nd deck and the 8th decks have a fairly comparable weight addition, however, ballasting the 8th deck tanks costs significantly less. The complete preliminary cost comparison for the 2nd, 4th, and 8th decks is found in Appendix D.

Adding ballast to the 2nd deck voids does increase KG and thus reduces the KG service life allowance margin; however, the increase seen is fairly small. In fact, as shown in Appendix D, a 1.5 degree list correction results in approximately a 0.1 percent KG increase. On average, the Nimitz class carriers currently have a KG of 47 feet, as shown in Table 1. The goal KG service life allowance is not to exceed 48.5 feet. Thus, to fix an inherent list of 1.5 degrees, there would be a .05 foot increase in KG.

2.4 Structural Analysis

One tank on each deck was chosen for structural analysis due to the geometrical similarities between tanks. Analysis was performed on any existing shell and/or deck plating, as well as all longitudinal and transverse bulkheads for the tank chosen from each deck. The volume of each tank was obtained from POSSE so that the weight of Perma Ballast® required to fill the entire tank could be calculated in ltons. The density used for all the Perma Ballast® calculations was 200 lb/ft^3. All structural calculations are located in Appendix E.

All surface ships shall be designed to withstand a number of loading conditions including ship motion loads. Ship motion loads are defined by [6] as the inertia forces and gravity components resulting from the motion of the ship in a seaway. The ship motion factors for this analysis were obtained from Naval Sea Systems Command's Ship Survivability Division. Although these factors will vary slightly depending on location, they were assumed to be constant. They are as follows:

Ship Motion Factors:

$V := 1.25$	Vertical
$A := 0.75$	Athwartship
$F := 0.4$	Fore/Aft

Once the ship motion factors were applied to each direction respectively, the total normal force could be calculated. The force affecting the structural analysis was dependent on the location of the deck or bulkhead being analyzed. For example, the total force acting on the 2nd deck's sponson shell plating had to be resolved from both a vertical and athwartship force. The resulting pressure, or equivalent head, on the plating was then found using this resolved normal force. Each tank was based on a 95% usable volume to account for structural internals or utilities running through the space.

In accordance with [6], panels of plating shall be proportioned so as not to exceed the breadth-thickness ratios indicated by:

$$\frac{b}{t} \leq \frac{C}{K \cdot \sqrt{H}}$$

b = short dimension of the panel (inches)

t = thickness of the plate (inches)

C = coefficient that is a function of the plating material and the location of the plating on the ship

K = coefficient that depends on the aspect ratio (AR) of the panel

H = head of salt water (feet)

The coefficients C and K are provided in Table I of Section 100, the General Requirements for Hull Structure, in [6]. There are a number of key assumptions that were made following these design criteria for plate panels subjected to normal loads. The ship plating is divided up into any number of panels, depending on the amount of stiffening that exists. The panel is considered to have clamped or fixed ends and is subject to cylindrical bending, a plate that is subject to bending about one axis only (as usually occurs for long plates). The cross-section of this panel is considered to be rectangular in shape with a depth equal to the plating thickness and a unit width. The K coefficient is important for relatively short panels. The C coefficient is actually derived from standard beam theory for a fixed-fixed beam, by combining allowable stress, specific gravity of salt water, and this K coefficient. An example of a C coefficient derivation starting with beam theory can be seen at the end of the 2nd deck sponson shell plating structural calculations shown in Appendix E.

Also important to consider in the structural calculations, particularly for the 2nd deck sponson shell plating, was the maximum shell plating pressure. According to CVN 76 specifications, the maximum pressure for sponson shell plating is 1000 psf. As a result, the limiting weight of Perma Ballast® for these tanks had to be calculated based on not exceeding

this pressure. This resulted in a reduction of approximately 55 ltons of ballast, for this particular case only. Similarly, the only structural analysis performed for the 4th deck void was on its deck plating. Once it was determined that deck stiffening would be required, the 4th deck tanks were taken out of consideration as a possible location for placing this ballast. Although adding a stiffener down the middle of the deck plating would alleviate any structural concerns, welding to the deck plating would have to be performed. With welding required on the bottom deck plating, a watch would need to be stationed on the other side of the deck. The tanks below these 4th deck tanks are foam filled and a fire watch cannot be stationed in these tanks.

Once a maximum pressure in head of water was calculated, the breadth-thickness ratio formula could be used again to determine the stiffener spacing or limiting short dimension of the panel. If the calculated maximum distance that the stiffeners can be located apart fell less than the actual stiffener spacing, then no plastic deformation would occur and stiffening of the plating was not required. If stiffening was required, then the panel thickness was usually divided in half to accommodate the calculated pressure.

The final calculations involved verifying that the calculated maximum allowable stress was less than the design allowable stress for the particular type of steel, regardless of whether any modifications were made. The basic equation used to calculate the maximum stress governing the behavior of plating under lateral load, or plate bending, can be seen below.

$$\sigma := k \cdot P \cdot \left(\frac{b}{t}\right)^2$$

Using small deflection theory, the value of the coefficient k depends on the boundary conditions. For simply supported edges, k=.75 and for clamped edges, k=.5. Simply supported and clamped structural cases are idealizations of structural member support illustrating zero stiffness and infinite stiffness, neither of which exists in any real-world structural system. On

board ship, structural systems can be conveniently approximated by one or the other case, but in fact have stiffness between one or the other. This equation is used for all plates whether they are long or not, and the coefficient k also accounts for the effect of the aspect ratio a/b. Again, b is the short dimension of the panel and t is the plating thickness. Figure 1 illustrates graphically the stresses in rectangular plates under uniform lateral pressure.

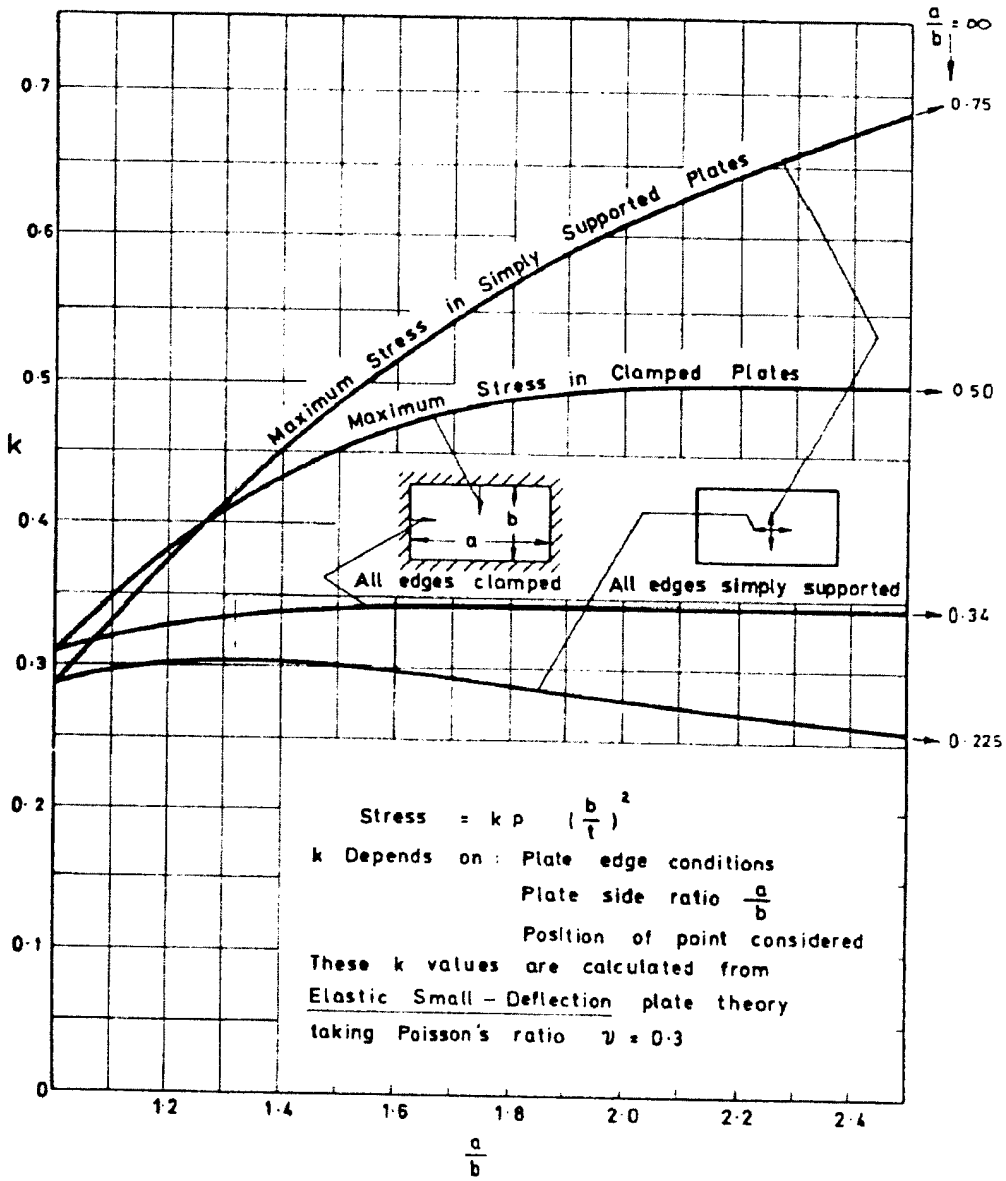

Figure 1: Stresses in rectangular plates under uniform lateral pressure [2]

2.4.1 Structural Modifications

2.4.1.1 Modifications to the 2nd Deck

There were actually three port sponson voids modeled in POSSE on the 2nd deck. Due to existing geometrical similarities between the tanks, only compartment 2-165-8-V was analyzed for possible structural modifications. Basic dimensions and tank geometry can be seen below in Figure 2.

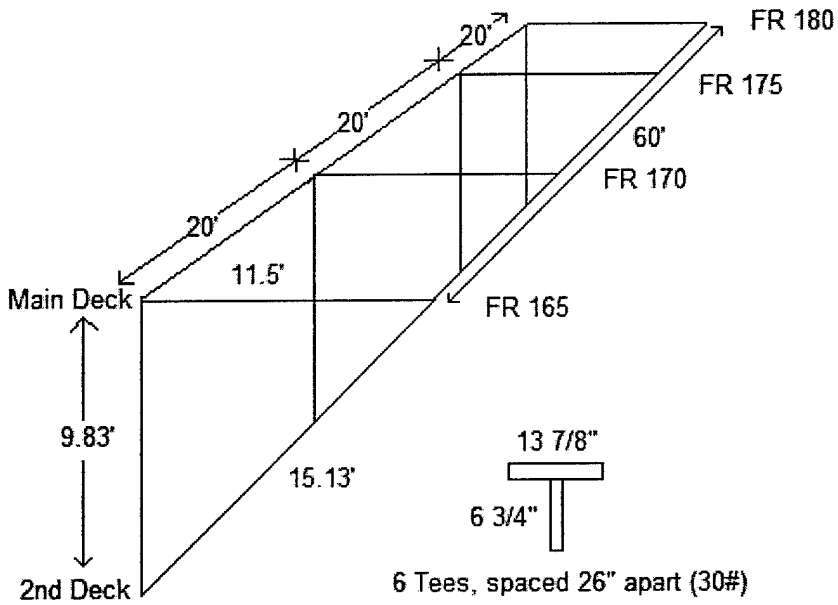

Figure 2: 2nd Deck Compartment 2-165-8-V

It was found that only 281 ltons of ballast could be added to this compartment in order not to exceed the 1000 psf sponson shell plating maximum pressure criteria. Table 3 shows the required structural modifications for compartment 2-165-8-V for a 281 lton ballast addition at 200 lb/ft^3. All calculations are located in Appendix E.

Table 3: Required Structural Modifications for 2-165-8-V

Ship Structure	Structural Modifications
Sponson Shell Plating	Add 7 vertical stiffeners (5" x 4" x 7.5# x T) (MS) Max Panel Plating Size: 13" X 181.56"
Ship Shell Plating (Inner Longitudinal Bulkhead)	No modifications required
Transverse Bulkheads (Frames 165, 170, 175, and 180)	No modifications required

The sponson shell plating required the addition of 7 vertical stiffeners due to its thinner plating on the sponsons. The sponson shell plating is only 10.2# (.25") plate. The inner longitudinal bulkhead, which is really the ship shell plating, is 30.6# (.75") and the transverse bulkheads are 20.4# (.5"). Similarly, the transverse bulkheads are extensively stiffened, and the longitudinal stiffener has one large horizontal stiffener running down the center of the bulkhead. As a result, modifications to these bulkheads were not required. A cross-sectional view of the transverse bulkhead at Frame 165 is shown in Figure 3.

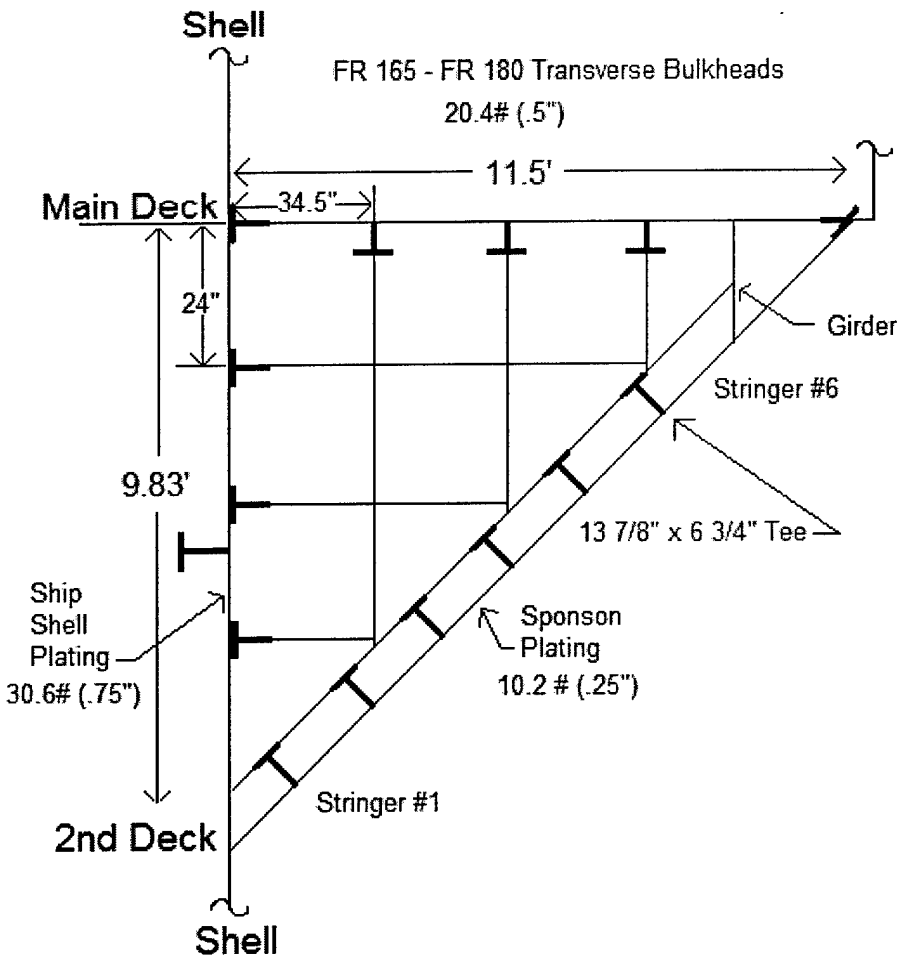

Figure 3: 2nd Deck Compartment 2-165-8-V, transverse section

2.4.1.2 Modifications to the 4th Deck

As mentioned previously, the only structural analysis performed for the 4th deck void was on its deck plating. Once it was determined that deck stiffening would be required, the 4th deck tanks were taken out of consideration as a possible location for placing this ballast. The 4th deck voids do not have any stiffened plating. Although adding a stiffener down the middle of the deck plating would alleviate any structural concerns, welding to the deck plating could not be performed due to the foam filled void below and the inability to station a fire watch there. Table 4, however, shows the structural modifications to the deck plating that would be necessary for

compartment 4-165-4-V for a 50 lton ballast addition at 200 lb/ft^3. All calculations are located in Appendix E.

Table 4: Required Structural Modifications for 4-165-4-V

Ship Structure	Structural Modifications
Deck Plating	Add 1 longitudinal stiffener (5" x 4" x 7.5# x T) (MS) Max Panel Plating Size: 24" X 240"

There were sixteen port voids modeled in POSSE on the 4th deck. Due to existing geometrical similarities between the tanks, only compartment 4-165-4-V was analyzed for possible structural modifications. Basic dimensions and tank geometry can be seen below in Figure 4.

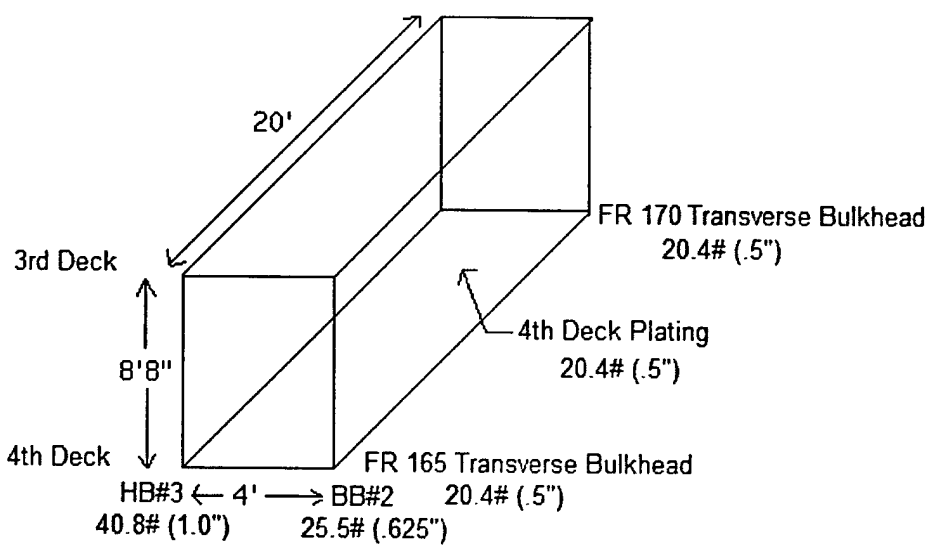

Figure 4: 4th Deck Compartment 4-165-4-V

2.4.1.3 Modifications to the 8th Deck

There were eleven port voids modeled in POSSE on the 8th deck. Due to existing geometrical similarities between the tanks, only compartment 8-225-6-V was analyzed for possible structural modifications. Basic dimensions and tank geometry can be seen below in Figure 5.

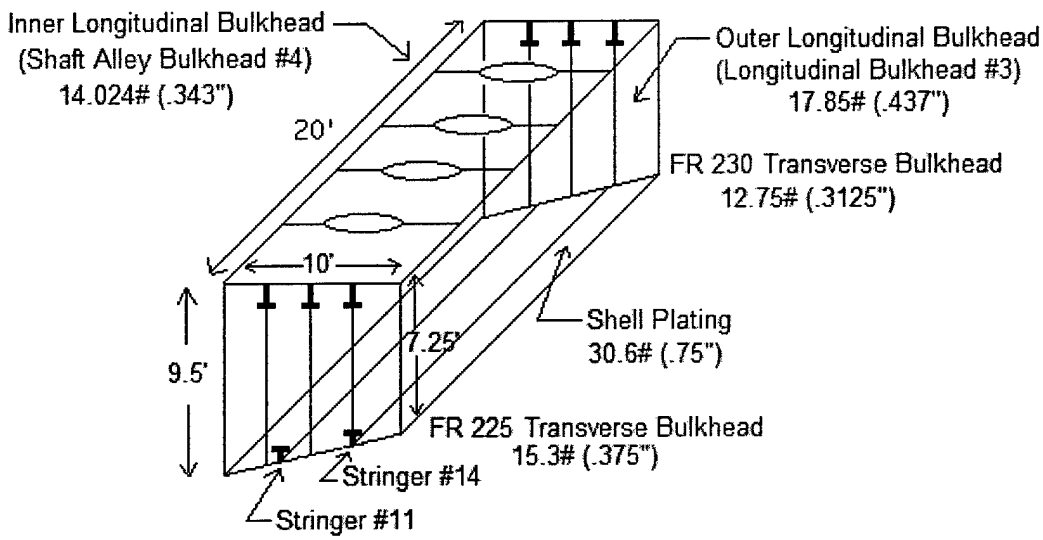

Figure 5: 8th Deck Compartment 8-225-6-V

There is considerable stiffening already in all the 8th deck voids. It was determined, however, that the plating thickness for these voids is much thinner than initially estimated. As a result, most of the bulkheads require stiffening. Structural analysis was first performed on the shell plating. A minimum ballast weight of 227 ltons was calculated so that structural modifications would not be required on the ship shell plating. This weight, however, is still too high for the rest of the bulkheads, as the other bulkheads do require stiffening. It is recommended that a stiffener be placed between each existing stiffener on the longitudinal and transverse bulkheads. Table 5 shows the required structural modifications for compartment 8-225-6-V for a 227 lton ballast addition at 200 lb/ft^3. All calculations are located in Appendix E.

Table 5: Required Structural Modifications for 8-225-6-V

Ship Structure	Structural Modifications
Shell Plating	No modifications required
Inner Longitudinal Bulkhead (Shaft Alley Bulkhead #4)	Add 5 vertical stiffeners (5" x 4" x 7.5# x T) (MS) Max Panel Plating Size: 24" X 114"
Outer Longitudinal Bulkhead (Bulkhead #3)	Add 5 vertical stiffeners (5" x 4" x 7.5# x T) (MS) Max Panel Plating Size: 24" X 87"
Transverse Bulkhead (Frame 225)	Add 4 vertical stiffeners (5" x 4" x 7.5# x T) (MS) Max Panel Plating Size: 15" X 114" *Note-panel height is dependent on trapezoidal geometry
Transverse Bulkhead (Frame 230)	Add 4 vertical stiffeners (5" x 4" x 7.5# x T) (MS) Max Panel Plating Size: 15" X 114" *Note-panel height is dependent on trapezoidal geometry

3.0 Final Analysis and Results

This project design spiraled toward finding the most cost effective and advantageous solid ballasting solution for correcting the inherent list on the Nimitz class carriers. The preliminary decision-making cost estimation proved that the 200 lb/ft^3 density was the most cost effective for the same amount of ballast weight. The 325 lb/ft^3 ballast was so much more expensive, that although the number of tanks required to ballast with 200 lb/ft^3 was higher, it was still more cost effective to use the 200 lb/ft^3 density ballast. Once the structural analysis was complete, the minimum ballasting weights that were found had to be analyzed in POSSE again. For this analysis, the 4th deck was eliminated completely due to its structural limitations. Similarly, any required structural modifications that were not already included in the cost estimations had to be taken in to account for both the 2nd and 8th decks.

3.1 Final POSSE Results

The minimum amount of 200 lb/ft^3 ballast that could be added to compartment 2-165-8-V was found to be 281 ltons which corresponds to 79% of that compartment's total capacity. Up until this point, all tanks had been analyzed to 95% of total capacity due to structural internals or possible utilities running through the space. Structural analysis was then performed for compartment 2-180-6-V. A minimum ballast weight of 448 ltons was calculated so that the maximum pressure design criterion of 1000 psf was not violated. Because less ballast could be added to these tanks, the POSSE analysis had to be expanded to include compartment 2-250-4-V. These new results for the 2nd deck had little effect on KG and only enhanced the aft trim correction.

The minimum amount of 200 lb/ft^3 ballast that could be added to compartment 8-225-6-V was 227 ltons. This was calculated to avoid performing structural modifications on the ship shell plating. As a result, only 90% of that compartment's total capacity could be utilized which was 5% less than originally analyzed in POSSE. This time, rather than perform a structural analysis on all the 8th deck voids, a maximum capacity thumb rule of 90% was applied to all the 8th deck voids. As a result, different tanks were selected and analyzed to achieve the least lton addition for the same incremental change in degrees. Again, this had little effect on KG and change in trim.

A table providing POSSE modeling results in a combat load condition for list correction in half degree increments up to 3 degrees for 200 lb/ft^3 is included in Appendix F. This information includes:

- Tank name
- Tank volume

- Ballast type density
- Tank weight

Degree Increment:

- Weight
- Percent change
- Δ KG
- Δ Trim

3.2 Final Cost Estimation

Once the POSSE modeling analysis was complete, a final cost assessment was made based on the new results for list correction in half degree increments up to 3 degrees for the 2nd and 8th deck tanks. Because the 8th deck tanks now had to be stiffened, the material costs and material weights had to be determined. The production costs were assumed to be the same. This information is included in Appendix G. Also, analysis on the 2nd deck revealed that compartment 2-250-2-V had to be used when trying to correct 3 degrees of list. Code 256 provided production and material costs as well as the material weights for tank prepping the Perma Ballast® installation.

All cost estimations were calculated and derived as previously discussed in the preliminary cost estimation section. This time, however, 2nd deck tanks were based on approximately 80% fillable capacity and 8th deck tanks were based on approximately 90% fillable capacity. When filled to these capacities, canning plate work was not required. Similarly, any additional weight added due to the addition of internal structures or stiffening was again tabulated and tracked. Table 6 shows the total cost, total weight addition, and change in KG for each half degree increment on both the 2nd and 8th decks.

Table 6: Final Cost, Weight Addition, and Change in KG Comparison

List (Degrees)	**0.5**		**1**		**1.5**	
Ballast Density	**(200 lbs/ft^3)**		**(200 lbs/ft^3)**		**(200 lbs/ft^3)**	
Tank Location	**2nd Deck**	**8th Deck**	**2nd Deck**	**8th Deck**	**2nd Deck**	**8th Deck**
Production Cost ($)	115,046	42,372	243,240	84,744	280,062	127,116
Material Cost ($)	7,744	8,850	16,373	17,700	18,851	26,550
Perma Cost ($)**	127,900	139,825	158,950	186,400	190,675	227,125
Total Cost ($)	**250,690**	**191,047**	**418,563**	**288,844**	**489,588**	**380,791**
Material Weight (Ltons)	1.65	0.80	3.49	1.61	4.01	2.41
Perma Weight (Ltons)	124	177	262	384	403	565
Total Weight (Ltons)	**125.65**	**177.80**	**265.49**	**385.61**	**407.01**	**567.41**
Δ KG (ft)**	+0.02	-0.02	+0.04	-0.05	+0.05	-0.08

**Perma cost estimates based on $100,000 + $225/lt for 200 lbs/ft^3
**(+) indicates increasing KG which is a negative effect
**(-) indicates decreasing KG which is a positive effect

List (Degrees)	**2**		**2.5**		**3**	
Ballast Density	**(200 lbs/ft^3)**		**(200 lbs/ft^3)**		**(200 lbs/ft^3)**	
Tank Location	**2nd Deck**	**8th Deck**	**2nd Deck**	**8th Deck**	**2nd Deck**	**8th Deck**
Production Cost ($)	411,552	148,302	427,331	211,860	478,840	233,046
Material Cost ($)	27,701	30,975	28,764	44,250	32,231	48,675
Perma Cost ($)**	222,175	295,075	253,675	341,200	288,775	392,050
Total Cost ($)	**661,428**	**474,352**	**709,770**	**597,310**	**799,846**	**673,771**
Material Weight (Ltons)	5.90	2.81	6.13	4.02	6.86	4.42
Perma Weight (Ltons)	543	867	683	1,072	839	1,298
Total Weight (Ltons)	**548.90**	**869.81**	**689.13**	**1,076.02**	**845.86**	**1,302.42**
Δ KG (ft)**	+0.07	-0.13	+0.09	-0.14	+0.11	-0.17

**Perma cost estimates based on $100,000 + $225/lt for 200 lbs/ft^3
**(+) indicates increasing KG which is a negative effect
**(-) indicates decreasing KG which is a positive effect

3.2.1 Ease of Removal

As mentioned previously, Perma Ballast® is removable. In fact, removal costs were assessed as well for this project on a per tank basis. For the purposes of this thesis, all tank prepping costs for ballast removal by BTI were also calculated by Norfolk Naval Shipyard (Code 256). It was estimated that it would cost approximately $78,652 for labor and material to remove/reinstall accesses and interferences for one 8th deck tank, and approximately $63,412 for labor and material to remove/reinstall accesses for one 2nd deck tank.

Ballast removal costs were also obtained from BTI. It was determined that it would be best for BTI to actually remove the ballast and dispose of it due to the high costs involved should a naval shipyard need to dispose of the ballast. For ballast removal, BTI will charge a fixed fee of $100,000 for locating and utilizing their equipment and approximately $395 to remove the ballast per lton. They also estimated approximately $65 per lton to dispose of it. All pricing is based on disposal of 100% of the water used to re-slurry the material.

For example, a 1.5 degree list correction would require approximately 400 lton of ballast and would need to be removed from two 2nd deck tanks. This would result in a total removal cost of $347,412 of which $284,000 is for the ballast removal and $63,412 is for removing and reinstalling accesses. It should be noted that this ballast addition is only as permanent a solution as it needs to be. For example, should future modifications entail replacing the old Nimitz island with a new CVN 76 island, it would then be desirable and cost effective to remove this ballast.

3.2.2 Evidence Perma Ballast® is non-corrosive

Recently, the American Bureau of Shipping (ABS) required a sealift conversion vessel that installed this Perma Ballast® in 1984 to remove its ballast. Concern had arisen because a tank inspection revealed that corrosion coupons had undergone significant weight loss.

Corrosion coupons are placed in all tanks that have Perma Ballast® installed so that periodic tank inspections can be made to determine if corrosion exists. It turned out that the corrosion coupons were improperly attached to the manhole covers and only rested in the tops of the beds of Perma Ballast®. The corrosion coupons should be hung on chains and buried within the bed of ballast. Over the years, the coupons were repeatedly exposed to air and water during inspections, rather than being properly re-installed into the Perma Ballast®. ABS did report, however, that all 4 of the tanks were in perfect condition after the Perma Ballast® removal, almost 20 years after initial installation. Actual cost data was also obtained from this vessel. The cost to cut into 8 compartments and remove the ballast was approximately $250,000. The cost to replace the steel and reweld the hull after the ballast was reinstalled was approximately $100,000. As one can see, the removal costs are relatively low and experience proves that corrosion will not be a concern.

4.0 Conclusion

Solid ballast is the most advantageous solution for correcting the inherent list on the Nimitz class aircraft carriers. Table 6 illustrates that there are a number of advantages and disadvantages that must be considered when determining the proper location for the Perma Ballast®.

- The 2nd deck is the choice location for list corrections **at or beyond 1.5 degrees**. The costs associated with adding ballast to the 2nd deck is much higher, but the amount of ballast required is significantly less than that required for the 4th and 8th decks.
    - Advantages:
        - significantly less weight added
    - Disadvantages:
        - more costly
        - increased KG*
- For list corrections **less than 1.5 degrees**, the choice location is the 8th deck. Less than 1.5 degrees, the 2nd and 8th decks have a fairly comparable weight addition, however, ballasting the 8th deck tanks costs significantly less.
    - Advantages:
        - significantly less costly
        - decreased KG*
    - Disadvantages:
        - increased weight addition

*Any positive change in KG serves to reduce the remaining KG service life allowance. The average KG service life allowance remaining for most carriers is approximately 1.5 feet. Even the greatest list correction of 3 degrees is only a 7% reduction in the remaining KG service life allowance for the aircraft carriers.

5.0 Recommendations

1. As can be seen in Table 1, most of the Nimitz class aircraft carriers currently have an average list of approximately 1.5 degrees. It is recommended that the ships be ballasted on the 2nd deck at this point to avoid adding excess ballast as mentioned previously. The cost is approximately 22% higher, but the weight addition is approximately 28% less. This is a considerable amount of weight reduction. The displacement service life allowance must also be analyzed. If you assume a contract displacement of 100,000 long tons with a 5% service life displacement allowance for an in-service carrier, then 400 long tons to correct 1.5 degrees of inherent list would be less than 1/10 of the service life (100,000 * .05 = 5,000 ltons and 400 / 5000 is approx. 8%). This can be viewed as a significant change in displacement or a relatively small change in displacement when looking at all the advantages that come with correcting the inherent list on the Nimitz class carriers. Also, the cost per lton for a 1.5 degree list correction is approximately $1,200. This is truly inexpensive from a survivability standpoint and also reduces the operational constraints placed on the ship.

2. The prudent manner in which to handle the inherent list associated with each aircraft carrier is to perform an inclining experiment on each carrier. The inclining experiment data can then be used to assess the amount of ballast necessary for installation and can be conducted when each ship's operational schedule will permit it. As mentioned previously, much of the data for each carrier has been extrapolated from re-evaluation of the results of the CVN 71 Displacement Test and the CVN 68 Post-RCOH inclining experiment. Knowing that these tests are extremely expensive and that CVN 71-75 are the carriers in need of list correction, perhaps an inclining experiment could be performed on one of these carriers so that data could then be extrapolated further.

3. Until this point, there has been little mention of what reducing the inherent list could do for manpower reduction. The number of man-hours that could be saved due to fixing this problem could far outweigh anything discussed in this project so far. This is certainly something that should be studied and investigated as well.

References

[1] Design Data Sheet 079-1, "Stability and buoyancy of U. S. Naval Surface Ships," Department of the Navy, Naval Ship Engineering Center.

[2] Hughes, Owen F., "Ship Structural Design: A Rationally-Based, Computer-Aided Optimization Approach," The Society of Naval Architects and Marine Engineers, 1988.

[3] NAVSEA 0900-LP-097-4010, "Structural Design Manual For Naval Surface Ships," Department of the Navy, Naval Sea System Command, 15 December 1976.

[4] NAVSEAINST 9096.3D, "Weight and Moment Compensation and Limiting Drafts for Naval Surface Ships," Department of the Navy, Naval Sea Systems Command, 16 August 2001.

[5] NAVSEAINST 9096.6B, "Policy for Weight and Vertical Center of Gravity Above Bottom of Keel (KG) Margins for Surface Ships," Department of the Navy, Naval Sea Systems Command, 16 August 2001.

[6] NAVSEA S9AA0-AA-SPN-010, "General Specification for Ships of the United States Navy," Department of the Navy, Naval Sea Systems Command, 1991.

[7] Nimitz Class Ship Specifications

[8] Nimitz Class Ship Characteristics and Drawings

[9] N.S. NAPPI ASSOCIATES, INC, "Investigation of an Alternative Method for Determining the Limiting Displacement for Strength for CVN 68-CVN 70 Ships," Rockville, Maryland, January 2003.

[10] OPNAVINST 9070.1, "Survivability Policy for Surface Ships of the U. S. Navy," Department of the Navy, Office of the Chief of Naval Operations, 23 September 1988.

[11] OPNAVINST 9096.1, "Weight and Stability Limits for Naval Surface Ships," Department of the Navy, Office of the Chief of Naval Operations, 12 November 1985.

[12] Malone, Michael L., "An Alternate Method for the Determination of Aircraft Carriers Limiting Displacement for Strength," Master's Thesis, Massachusetts Institute of Technology, June 2001.

[13] Roark, Raymond J., "Formulas for Stress and Strain," McGraw-Hill Book Company, 1975.

[14] USS Dwight D. Eisenhower (CVN 69) Engineering Department Standing Order 05, "List Control System Management," Engineering Department, USS Dwight D. Eisenhower (CVN 69), 30 December 1999.

Appendix A: Tank Location Study

Tanks	Capacity (325 lbs/ft^3)			Intact Trim and Stability								
	Volume (ft^3)	Density (LT/ft^3)	Weight (LT)	Initial KG	Initial Trim	Initial List (Starboard)	Final KG	Δ KG	Final Trim	Δ Trim	Final List	Δ List
2nd Deck												
2-165-8-V	3,969	0.1451	576	46.73	2.86	3.0	46.80	0.07	2.55	0.31	1.0	2.0
2-180-6-V	6,273	0.1451	910	46.73	2.86	3.0	46.85	0.12	2.02	0.84	-0.1	3.1
2-250-4-V	3,362	0.1451	488	46.73	2.86	3.0	46.79	0.06	1.80	1.06	1.6	1.4
4th Deck												
4-96-2-V	544	0.1451	79	46.73	2.86	3.0	46.73	0.00	2.94	-0.08	2.8	0.2
4-100-4-V	544	0.1451	79	46.73	2.86	3.0	46.73	0.00	2.93	-0.07	2.8	0.2
4-104-2-V	544	0.1451	79	46.73	2.86	3.0	46.73	0.00	2.93	-0.07	2.8	0.2
4-108-2-V	679	0.1451	99	46.73	2.86	3.0	46.73	0.00	2.93	-0.07	2.7	0.3
4-113-4-V	680	0.1451	99	46.73	2.86	3.0	46.73	0.00	2.92	-0.06	2.7	0.3
4-118-2-V	680	0.1451	99	46.73	2.86	3.0	46.73	0.00	2.91	-0.05	2.7	0.3
4-123-6-V	680	0.1451	99	46.73	2.86	3.0	46.73	0.00	2.90	-0.04	2.7	0.3
4-148-2-V	544	0.1451	79	46.73	2.86	3.0	46.73	0.00	2.86	0.00	2.8	0.2
4-152-2-V	544	0.1451	79	46.73	2.86	3.0	46.73	0.00	2.85	0.01	2.8	0.2
4-156-2-V	553	0.1451	80	46.73	2.86	3.0	46.73	0.00	2.84	0.02	2.8	0.2
4-160-2-V	717	0.1451	104	46.73	2.86	3.0	46.73	0.00	2.83	0.03	2.7	0.3
4-165-4-V	700	0.1451	102	46.73	2.86	3.0	46.73	0.00	2.82	0.04	2.7	0.3
4-170-2-V	678	0.1451	98	46.73	2.86	3.0	46.73	0.00	2.81	0.05	2.7	0.3
4-175-6-V	680	0.1451	99	46.73	2.86	3.0	46.73	0.00	2.80	0.06	2.7	0.3
4-180-6-V	681	0.1451	99	46.73	2.86	3.0	46.73	0.00	2.79	0.07	2.7	0.3
4-185-4-V	666	0.1451	97	46.73	2.86	3.0	46.73	0.00	2.78	0.08	2.7	0.3
8th Deck												
8-210-10-V	1,716	0.1451	249	46.73	2.86	3.0	46.70	-0.03	2.53	0.33	2.3	0.7
8-215-8-V	1,238	0.1451	180	46.73	2.86	3.0	46.71	-0.02	2.61	0.25	2.6	0.4
8-215-10-V	1,187	0.1451	172	46.73	2.86	3.0	46.71	-0.02	2.62	0.24	2.5	0.5
8-220-8-V	1,019	0.1451	148	46.73	2.86	3.0	46.71	-0.02	2.64	0.22	2.6	0.4
8-220-10-V	737	0.1451	107	46.73	2.86	3.0	46.72	-0.01	2.70	0.16	2.7	0.3
8-225-6-V	2,814	0.1451	408	46.73	2.86	3.0	46.67	-0.06	2.20	0.66	2.2	0.8
8-225-8-V	1,145	0.1451	166	46.73	2.86	3.0	46.71	-0.02	2.59	0.27	2.6	0.4
8-230-4-V	2,096	0.1451	304	46.73	2.86	3.0	46.69	-0.04	2.34	0.52	2.4	0.6
8-230-6-V	646	0.1451	94	46.73	2.86	3.0	46.72	-0.01	2.70	0.16	2.8	0.2
8-235-6-V	1,491	0.1451	216	46.73	2.86	3.0	46.71	-0.02	2.47	0.39	2.6	0.4
8-235-8-V	2,073	0.1451	301	46.73	2.86	3.0	46.72	-0.01	2.31	0.55	2.3	0.7

Negative Change in KG is downwards. Change in Trim is Aft by filling tanks Change in List is Port of Centerline

Tanks	Capacity (200 lbs/ft^3)			Intact Trim and Stability								
	Volume (ft^3)	Density (LT/ft^3)	Weight (LT)	Initial KG	Initial Trim	Initial List (Starboard)	Final KG	Δ KG	Final Trim	Δ Trim	Final List	Δ List
2nd Deck												
2-165-8-V	3,969	0.0894	354	46.73	2.86	3.0	46.78	0.05	2.67	0.19	1.8	1.2
2-180-6-V	6,273	0.0894	560	46.73	2.86	3.0	46.80	0.07	2.34	0.52	1.1	1.9
2-250-4-V	3,362	0.0894	300	46.73	2.86	3.0	46.77	0.04	2.21	0.65	2.1	0.9
4th Deck												
4-96-2-V	544	0.0894	49	46.73	2.86	3.0	46.73	0.00	2.91	-0.05	2.9	0.1
4-100-4-V	544	0.0894	49	46.73	2.86	3.0	46.73	0.00	2.91	-0.05	2.9	0.1
4-104-2-V	544	0.0894	49	46.73	2.86	3.0	46.73	0.00	2.90	-0.04	2.9	0.1
4-108-2-V	679	0.0894	61	46.73	2.86	3.0	46.73	0.00	2.91	-0.05	2.8	0.2
4-113-4-V	680	0.0894	61	46.73	2.86	3.0	46.73	0.00	2.90	-0.04	2.8	0.2
4-118-2-V	680	0.0894	61	46.73	2.86	3.0	46.73	0.00	2.89	-0.03	2.8	0.2
4-123-6-V	680	0.0894	61	46.73	2.86	3.0	46.73	0.00	2.89	-0.03	2.8	0.2
4-148-2-V	544	0.0894	49	46.73	2.86	3.0	46.73	0.00	2.86	0.00	2.8	0.2
4-152-2-V	544	0.0894	49	46.73	2.86	3.0	46.73	0.00	2.86	0.00	2.8	0.2
4-156-2-V	553	0.0894	49	46.73	2.86	3.0	46.73	0.00	2.85	0.01	2.8	0.2
4-160-2-V	717	0.0894	64	46.73	2.86	3.0	46.73	0.00	2.84	0.02	2.8	0.2
4-165-4-V	700	0.0894	62	46.73	2.86	3.0	46.73	0.00	2.84	0.02	2.8	0.2
4-170-2-V	678	0.0894	61	46.73	2.86	3.0	46.73	0.00	2.83	0.03	2.8	0.2
4-175-6-V	680	0.0894	61	46.73	2.86	3.0	46.73	0.00	2.82	0.04	2.8	0.2
4-180-6-V	681	0.0894	61	46.73	2.86	3.0	46.73	0.00	2.82	0.04	2.8	0.2
4-185-4-V	666	0.0894	60	46.73	2.86	3.0	46.73	0.00	2.81	0.05	2.8	0.2
8th Deck												
8-210-10-V	1,716	0.0894	153	46.73	2.86	3.0	46.71	0.02	2.66	0.20	2.6	0.4
8-215-8-V	1,238	0.0894	111	46.73	2.86	3.0	46.72	0.01	2.71	0.15	2.7	0.3
8-215-10-V	1,187	0.0894	106	46.73	2.86	3.0	46.72	0.01	2.71	0.15	2.7	0.3
8-220-8-V	1,019	0.0894	91	46.73	2.86	3.0	46.72	0.01	2.72	0.14	2.8	0.2
8-220-10-V	737	0.0894	66	46.73	2.86	3.0	46.73	0.00	2.76	0.10	2.8	0.2
8-225-6-V	2,814	0.0894	251	46.73	2.86	3.0	46.70	0.03	2.45	0.41	2.5	0.5
8-225-8-V	1,145	0.0894	102	46.73	2.86	3.0	46.72	0.01	2.70	0.16	2.7	0.3
8-230-4-V	2,096	0.0894	187	46.73	2.86	3.0	46.71	0.02	2.54	0.32	2.6	0.4
8-230-6-V	646	0.0894	58	46.73	2.86	3.0	46.73	0.00	2.76	0.10	2.8	0.2
8-235-6-V	1,491	0.0894	133	46.73	2.86	3.0	46.72	0.01	2.62	0.24	2.7	0.3
8-235-8-V	2,073	0.0894	185	46.73	2.86	3.0	46.72	0.01	2.52	0.34	2.6	0.4

Negative Change in KG is downwards. Change in Trim is Aft by filling tanks Change in List is Port of Centerline

Tanks	Capacity (Water Ballast)			Intact Trim and Stability								
	Volume (ft^3)	Density (LT/ft^3)	Weight (LT)	Initial KG	Initial Trim	Initial List (Starboard)	Final KG	Δ **KG**	Final Trim	Δ **Trim**	Final List	Δ **List**
2nd Deck												
2-165-8-V	3,969	0.0279	111	46.73	2.86	3.0	46.75	0.02	2.80	0.06	2.6	0.4
2-180-6-V	6,273	0.0279	175	46.73	2.86	3.0	46.76	0.03	2.70	0.16	2.4	0.6
2-250-4-V	3,362	0.0279	94	46.73	2.86	3.0	46.75	0.02	2.66	0.20	2.7	0.3
4th Deck												
4-96-2-V	544	0.0279	15	46.73	2.86	3.0	46.73	0.00	2.88	-0.02	2.9	0.1
4-100-4-V	544	0.0279	15	46.73	2.86	3.0	46.73	0.00	2.88	-0.02	2.9	0.1
4-104-2-V	544	0.0279	15	46.73	2.86	3.0	46.73	0.00	2.88	-0.02	2.9	0.1
4-108-2-V	679	0.0279	19	46.73	2.86	3.0	46.73	0.00	2.88	-0.02	2.9	0.1
4-113-4-V	680	0.0279	19	46.73	2.86	3.0	46.73	0.00	2.87	-0.01	2.9	0.1
4-118-2-V	680	0.0279	19	46.73	2.86	3.0	46.73	0.00	2.87	-0.01	2.9	0.1
4-123-6-V	680	0.0279	19	46.73	2.86	3.0	46.73	0.00	2.87	-0.01	2.9	0.1
4-148-2-V	544	0.0279	15	46.73	2.86	3.0	46.73	0.00	2.86	0.00	2.9	0.1
4-152-2-V	544	0.0279	15	46.73	2.86	3.0	46.73	0.00	2.86	0.00	2.9	0.1
4-156-2-V	553	0.0279	15	46.73	2.86	3.0	46.73	0.00	2.86	0.00	2.9	0.1
4-160-2-V	717	0.0279	20	46.73	2.86	3.0	46.73	0.00	2.86	0.00	2.9	0.1
4-165-4-V	700	0.0279	20	46.73	2.86	3.0	46.73	0.00	2.86	0.00	2.9	0.1
4-170-2-V	678	0.0279	19	46.73	2.86	3.0	46.73	0.00	2.85	0.01	2.9	0.1
4-175-6-V	680	0.0279	19	46.73	2.86	3.0	46.73	0.00	2.85	0.01	2.9	0.1
4-180-6-V	681	0.0279	19	46.73	2.86	3.0	46.73	0.00	2.85	0.01	2.9	0.1
4-185-4-V	666	0.0279	19	46.73	2.86	3.0	46.73	0.00	2.85	0.01	2.9	0.1
8th Deck												
8-210-10-V	1,716	0.0279	48	46.73	2.86	3.0	46.73	0.00	2.80	0.06	2.9	0.1
8-215-8-V	1,238	0.0279	35	46.73	2.86	3.0	46.73	0.00	2.81	0.05	2.9	0.1
8-215-10-V	1,187	0.0279	33	46.73	2.86	3.0	46.73	0.00	2.82	0.04	2.9	0.1
8-220-8-V	1,019	0.0279	28	46.73	2.86	3.0	46.73	0.00	2.82	0.04	2.9	0.1
8-220-10-V	737	0.0279	21	46.73	2.86	3.0	46.73	0.00	2.83	0.03	2.9	0.1
8-225-6-V	2,814	0.0279	79	46.73	2.86	3.0	46.72	0.01	2.74	0.12	2.8	0.2
8-225-8-V	1,145	0.0279	32	46.73	2.86	3.0	46.73	0.00	2.81	0.05	2.9	0.1
8-230-4-V	2,096	0.0279	58	46.73	2.86	3.0	46.73	0.00	2.76	0.10	2.9	0.1
8-230-6-V	646	0.0279	18	46.73	2.86	3.0	46.73	0.00	2.83	0.03	2.9	0.1
8-235-6-V	1,491	0.0279	42	46.73	2.86	3.0	46.73	0.00	2.79	0.07	2.9	0.1
8-235-8-V	2,073	0.0279	58	46.73	2.86	3.0	46.73	0.00	2.76	0.10	2.8	0.2

Negative Change in KG is downwards. Change in Trim is Aft by filling tanks Change in List is Port of Centerline

Appendix B: Preliminary POSSE Modeling Results

Provided by Norfolk Naval Shipyard Structural Engineering and Planning Office (Code 256)

Tanks	Capacity (325 lbs/ft³)			Degrees																							
				0.5				1				1.5				2				2.5				3			
	Volume (ft³)	Density (LT/ft³)	Weight (LT)	Weight (LT)	Percent (%)	Δ KG	Δ Trim	Weight (LT)	Percent (%)	Δ KG	Δ Trim	Weight (LT)	Percent (%)	Δ KG	Δ Trim	Weight (LT)	Percent (%)	Δ KG	Δ Trim	Weight (LT)	Percent (%)	Δ KG	Δ Trim	Weight (LT)	Percent (%)	Δ KG	Δ Trim
2nd Deck																											
2-165-8-V	3,969	0.1451	576	127	22			265	46			403	70			547	95			547	95			547	95		
2-180-6-V	6,273	0.1451	910																	136	15			273	30		
2-250-4-V	3,362	0.1451	488																								
Total (LT)				127	6.4	0.02	.07A	265	13.4	0.03	.15A	403	20.4	0.05	.23A	547	27.7	0.08	.31A	683	34.6	0.09	.44A	820	41.6	0.10	.58A
Number of Tanks				1 Tank				1 Tank				1 Tank				1 Tank				2 Tanks				2 Tanks			
4th Deck																											
4-96-2-V	544	0.1451	79																								
4-100-4-V	544	0.1451	79																								
4-104-2-V	544	0.1451	79																								
4-108-2-V	679	0.1451	99																								
4-113-4-V	680	0.1451	99																					94	95		
4-118-2-V	680	0.1451	99																					94	95		
4-123-6-V	680	0.1451	99																	94	95			94	95		
4-148-2-V	544	0.1451	79	75	95			75	95			75	95			75	95			75	95			75	95		
4-152-2-V	544	0.1451	79	75	95			75	95			75	95			75	95			75	95			75	95		
4-156-2-V	553	0.1451	80					76	95			76	95			76	95			76	95			76	95		
4-160-2-V	717	0.1451	104					99	95			99	95			99	95			99	95			99	95		
4-165-4-V	700	0.1451	102									96	95			96	95			96	95			96	95		
4-170-2-V	678	0.1451	98									94	95			94	95			94	95			94	95		
4-175-6-V	680	0.1451	99													94	95			94	95			94	95		
4-180-6-V	681	0.1451	99													94	95			94	95			94	95		
4-185-4-V	666	0.1451	97																	92	95			92	95		
Total (LT)				150	10.2	0.00	0.02A	325	22.2	-0.01	0.08A	515	35.1	-0.02	.17A	703	47.9	-0.03	.31A	889	60.5	-0.05	.36A	1077	73.3	-0.06	.25A
Number of Tanks				2 Tanks				4 Tanks				6 Tanks				8 Tanks				10 Tanks				12 Tanks			
8th Deck																											
8-210-10-V	1,716	0.1451	249					237	95			237	95			237	95			237	95			237	95		
8-215-8-V	1,238	0.1451	180									171	95			171	95			171	95			171	95		
8-215-10-V	1,187	0.1451	172	164	95			164	95			164	95			164	95			164	95			164	95		
8-220-8-V	1,019	0.1451	148													141	95			141	95			141	95		
8-220-10-V	737	0.1451	107																	102	95			102	95		
8-225-6-V	2,814	0.1451	408																					388	95		
8-225-8-V	1,145	0.1451	166																	158	95						
8-230-4-V	2,096	0.1451	304																								
8-230-6-V	646	0.1451	94													89	95							89	95		
8-235-6-V	1,491	0.1451	216																								
8-235-8-V	2,073	0.1451	301																								
Total (LT)				164	7.0	-0.02	.24A	401	17.1	-0.05	.58A	572	24.3	-0.08	.83A	802	34.1	-0.11	1.22A	973	41.4	-0.14	1.49A	1292	55.0	-0.19	2.05A
Number of Tanks				1 Tank				2 Tanks				3 Tanks				5 Tanks				6 Tanks				7 Tanks			

Tanks	Capacity (200 lbs/ft³)			Degrees																							
				0.5				1				1.5				2				2.5				3			
	Volume (ft³)	Density (LT/ft³)	Weight (LT)	Weight (LT)	Percent (%)	Δ KG	Δ Trim	Weight (LT)	Percent (%)	Δ KG	Δ Trim	Weight (LT)	Percent (%)	Δ KG	Δ Trim	Weight (LT)	Percent (%)	Δ KG	Δ Trim	Weight (LT)	Percent (%)	Δ KG	Δ Trim	Weight (LT)	Percent (%)	Δ KG	Δ Trim
2nd Deck																											
2-165-8-V	3,969	0.0893	354	124	35			262	74			337	95			337	95			337	95			337	95		
2-180-6-V	6,273	0.0893	560									62	11			202	36			342	61			532	95		
2-250-4-V	3,362	0.0893	300																								
Total (LT)				124	10.2	0.02	.07A	262	21.6	0.04	.15A	399	32.8	0.05	.25A	539	44.3	0.07	.39A	679	55.8	0.09	.52A	869	71.5	0.12	.71A
Number of Tanks				1 Tank				1 Tank				2 Tanks				2 Tanks				2 Tanks				2 Tanks			
4th Deck																											
4-96-2-V	544	0.0893	49																	46	95						
4-100-4-V	544	0.0893	49																	46	95						
4-104-2-V	544	0.0893	49																	46	95						
4-108-2-V	679	0.0893	61													57	95			57	95						
4-113-4-V	680	0.0893	61													57	95			57	95						
4-118-2-V	680	0.0893	61													57	95			57	95						
4-123-6-V	680	0.0893	61									57	95			57	95			57	95						
4-148-2-V	544	0.0893	49									46	95			46	95			46	95						
4-152-2-V	544	0.0893	49	46	95			46	95			46	95			46	95			46	95						
4-156-2-V	553	0.0893	49	47	95			47	95			47	95			47	95			47	95						
4-160-2-V	717	0.0893	64	61	95			61	95			61	95			61	95			61	95						
4-165-4-V	700	0.0893	62					59	95			59	95			59	95			59	95						
4-170-2-V	678	0.0893	61					58	95			58	95			58	95			58	95						
4-175-6-V	680	0.0893	61					58	95			58	95			58	95			58	95						
4-180-6-V	681	0.0893	61									58	95			58	95			58	95						
4-185-4-V	666	0.0893	60									57	95			57	95			57	95						
Total (LT)				154	17.1	0.00	0.04A	329	36.4	-0.01	0.14A	547	60.6	-0.03	.22A	718	79.7	-0.04	.11A	856	95	-0.04	.01F				
Number of Tanks				8 Tanks				8 Tanks				10 Tanks				13 Tanks				16 Tanks							
8th Deck																											
8-210-10-V	1,716	0.0893	153					146	95			146	95			146	95			146	95			146	95		
8-215-8-V	1,238	0.0893	111					105	95			105	95			105	95			105	95			105	95		
8-215-10-V	1,187	0.0893	106	101	95			101	95			101	95			101	95			101	95			101	95		
8-220-8-V	1,019	0.0893	91									86	95			86	95			86	95			86	95		
8-220-10-V	737	0.0893	66	63	95							63	95			63	95			63	95			63	95		
8-225-6-V	2,814	0.0893	251													239	95			239	95			239	95		
8-225-8-V	1,145	0.0893	102													97	95			97	95			97	95		
8-230-4-V	2,096	0.0893	187																	178	95			178	95		
8-230-6-V	646	0.0893	58									55	95							55	95			55	95		
8-235-6-V	1,491	0.0893	133																					126	95		
8-235-8-V	2,073	0.0893	185																					176	95		
Total (LT)				164	11.3	-0.02	.24A	352	24.3	-0.05	.51A	556	38.5	-0.08	0.85A	837	57.9	-0.12	1.33A	1070	74.0	-0.15	1.75A	1372	95	-0.18	2.33A
Number of Tanks				2 Tanks				3 Tanks				6 Tanks				7 Tanks				9 Tanks				11 Tanks			

Tanks	Capacity (Water Ballast)			Degrees											
				0.4				1				1.3			
	Volume (ft³)	Density (LT/ft³)	Weight (LT)	Weight (LT)	Percent (%)	Δ KG	Δ Trim	Weight (LT)	Percent (%)	Δ KG	Δ Trim	Weight (LT)	Percent (%)	Δ KG	Δ Trim
2nd Deck															
2-165-8-V	3,969	0.0279	111	105	95			105	95			105	95		
2-180-6-V	6,273	0.0279	175					166	95			166	95		
2-250-4-V	3,362	0.0279	94									89	95		
Total (LT)				105	27.7	0.02	.06A	271	71.5	0.04	.22A	360	95	0.05	.42A
Number of Tanks				2 Tanks				2 Tanks				3 Tanks			

Tanks	Capacity			Degrees							
				0.5				0.8			
	Volume (ft³)	Density (LT/ft³)	Weight (LT)	Weight (LT)	Percent (%)	Δ KG	Δ Trim	Weight (LT)	Percent (%)	Δ KG	Δ Trim
4th Deck											
4-96-2-V	544	0.0279	15					14	95		
4-100-4-V	544	0.0279	15					14	95		
4-104-2-V	544	0.0279	15					14	95		
4-108-2-V	679	0.0279	19					18	95		
4-113-4-V	680	0.0279	19					18	95		
4-118-2-V	680	0.0279	19					18	95		
4-123-6-V	680	0.0279	19					18	95		
4-148-2-V	544	0.0279	15	14	95			14	95		
4-152-2-V	544	0.0279	15	14	95			14	95		
4-156-2-V	553	0.0279	15	15	95			15	95		
4-160-2-V	717	0.0279	20	19	95			19	95		
4-165-4-V	700	0.0279	20	19	95			19	95		
4-170-2-V	678	0.0279	19	18	95			18	95		
4-175-6-V	680	0.0279	19	18	95			18	95		
4-180-6-V	681	0.0279	19	18	95			18	95		
4-185-4-V	666	0.0279	19	17	90			18	95		
Total (LT)				152	76.2	0.00	0.07A	267	95	-0.01	0.01F
Number of Tanks				9 Tanks				16 Tanks			

Tanks	Capacity			Degrees							
				0.5				1			
	Volume (ft³)	Density (LT/ft³)	Weight (LT)	Weight (LT)	Percent (%)	Δ KG	Δ Trim	Weight (LT)	Percent (%)	Δ KG	Δ Trim
8th Deck											
8-210-10-V	1,716	0.0279	48	45	95			45	95		
8-215-8-V	1,238	0.0279	35	33	95			33	95		
8-215-10-V	1,187	0.0279	33	31	95			31	95		
8-220-8-V	1,019	0.0279	28	27	95			27	95		
8-220-10-V	737	0.0279	21					20	95		
8-225-6-V	2,814	0.0279	79	75	95			75	95		
8-225-8-V	1,145	0.0279	32					30	95		
8-230-4-V	2,096	0.0279	58					56	95		
8-230-6-V	646	0.0279	18					17	95		
8-235-6-V	1,491	0.0279	42					40	95		
8-235-8-V	2,073	0.0279	58					55	95		
Total (LT)				211	46.9	-0.03	.33A	429	95	-0.05	.73A
Number of Tanks				5 Tanks				11 Tanks			

Appendix C: Preliminary Cost Estimation Data and Worksheets

PERMA BALLAST® INSTALLATION

ESTIMATORS NAME BACK **DATE** SEPT 2003

ESTIMATE SHEET

PC NO.	WORK TO BE ACCOMPLISHED	11 S1	11 S2	11 S6	74 YY	11 S5	24 J1	17 SC	26 W1	35 GA	38 YY	51 E1	56 P1	64 A1	64 A6	71 AA	72 R1	99 TS	75K A
	600 SF - CANNING PLATES FOR 2-165-8-V AT 100%																		
	OPEN & CLOSE VOID					**10**	**4**												
	CUT/INST ACCESSES FOR CANNING PLTS	**96**				**32**			**112**										
	4 LOCATIONS																		
	FAB CANNING PLTS & SUPPORT STR	**120**	**60**	**30**					**120**										
	INST CANNING PLTS & SUPPORT STR	**596**							**714**						**120**		**260**	**48**	
	CUT/INST ACCESSES (6) 12" FOR FILLING	**48**				**16**			**56**										
	TEST CANNING PLTS & ACCESSES					**48**													
	PREPARE AND PAINT STRUCT														**384**	**256**			
	TOTALS:	**860**	**60**	**30**		**106**	**4**		**1002**						**504**	**256**	**260**	**48**	**912**
	TOTAL 4096 MH'S TOTAL 512 MD'S																		
	TOTAL PROD $328,704																		
	MATERIAL: $22,126																		
	ADD'L WEIGHT: 10,556 #'S																		

MATERIAL WORK SHEET

PERMA BALLAST® INSTALLATION

SHOP	PC #	MATERIAL	STOCK NO.	QTY	SS/PUR	COST
		CANNING PLATES: 600 SF AREA FOR 2-165-8-V AT 100% COVERAGE				
11S1	001	10.2# OSS PLATE (10.2#/SF)	9515-00-153-3184	600	$4.12/SF	$2,472
11S1	002	2-1/2 X 2-1/2" ANGLE (4.1#LF)	9520-00-277-4920	170	$2.12/FT	$360
		SPONSON STIFFENING:				
11S1	003	5" X 4" ANGLE (7.5#LF)	9520-00-277-5978	225	$6.46/FT	$1,454
71AA	004	PAINT				$1,200
74YY	N/A	BLAST AND PAINT FACILITY				$12,000
ALL	N/A	CONSUMABLES				$4,640
		TOTAL MATERIAL COSTS:				$22,126
		TOTAL MATERIAL WEIGHT:				10,556 #'S

PERMA BALLAST® INSTALLATION

ESTIMATORS NAME BACK **DATE** SEPT 2003

ESTIMATE SHEET

PC NO.	WORK TO BE ACCOMPLISHED	11 S1	11 S2	11 S6	74 YY	11 S5	24 J1	17 SC	26 W1	35 GA	38 YY	51 E1	56 P1	64 A1	64 A6	71 AA	72 R1	99 TS	75K A
	960 SF - CANNING PLATES FOR 2-180-6-V AT 100%																		
	OPEN & CLOSE VOID					**10**	**4**												
	CUT/INST ACCESSES FOR CANNING PLTS	**154**				**52**			**180**										
	4 LOCATIONS																		
	FAB CANNING PLTS & SUPPORT STR	**192**	**96**	**48**					**192**										
	INST CANNING PLTS & SUPPORT STR	**954**							**1142**						**192**		**416**	**92**	
	CUT/INST ACCESSES (6) 12" FOR FILLING	**76**				**26**			**90**										
	TEST CANNING PLTS & ACCESSES					**76**													
	PREPARE AND PAINT STRUCT														**614**	**410**			
	TOTALS:	**1376**	**96**	**48**		**164**	**4**		**1604**						**806**	**410**	**416**	**92**	**1537**
	TOTAL 6554 MH'S TOTAL 819.25 MD'S																		
	TOTAL PROD $525,958																		
	MATERIAL: $35,402																		
	ADD'L WEIGHT: 16,890 #'S																		

MATERIAL WORK SHEET

PERMA BALLAST® INSTALLATION

SHOP	PC #	MATERIAL	STOCK NO.	QTY	SS/PUR	COST
		CANNING PLATES: 960 SF AREA FOR 2-180-6-V AT 100% COVERAGE				
11S1	001	10.2# OSS PLATE (10.2#/SF)	9515-00-153-3184	960	$4.12/SF	$3,955
11S1	002	2-1/2 X 2-1/2" ANGLE (4.1#LF)	9520-00-277-4920	275	$2.12/FT	$583
		SPONSON STIFFENING:				
11S1	003	5" X 4" ANGLE (7.5#LF)	9520-00-277-5978	360	$6.46/FT	$2,326
71AA	004	PAINT				$1,920
74YY	N/A	BLAST AND PAINT FACILITY				$19,200
ALL	N/A	CONSUMABLES				$7,418
		TOTAL MATERIAL COSTS:				$35,402
		TOTAL MATERIAL WEIGHT:				16,890 #'S

PERMA BALLAST® INSTALLATION

ESTIMATORS NAME BACK **DATE** SEPT 2003

ESTIMATE SHEET FOR TYPICAL VOID WITHOUT CANNING PLATES

PC NO.	WORK TO BE ACCOMPLISHED	11 S1	11 S2	11 S6	74 YY	11 S5	24 J1	17 SC	26 W1	35 GA	38 YY	51 E1	56 P1	64 A1	64 A6	71 AA	72 R1	99 TS	75K A
	TYPICAL VOID FOR PERMA BALLAST(R)(R)																		
	OPEN & CLOSE VOID					**10**	**4**												
	TOUCH-UP PAINT															**24**			
	CUT/INST ACCESSES (2) 12" FOR FILLING	**20**	**4**						**28**	**4**					**16**	**8**		**24**	
	TEST ACCESSES					**8**													
	REMOVE/REINSTALL INTERFERENCES							**32**											
	PATCH & REPAIR DECK COVERING													**24**					
	TOTALS:	**20**	**4**			**18**	**4**	**32**	**28**	**4**				**24**	**16**	**32**		**24**	**58**
	TOTAL 264 MH'S TOTAL 33 MD'S																		
	TOTAL PROD $21,186																		
	MATERIAL: $500																		
	NO ADDITIONAL WEIGHT ADDED																		

PERMA BALLAST® INSTALLATION

OPTION 1
(2ND DECK VOIDS 0.5° LIST)

TANK	LIST	PERCENT	TYPE	PROD $	MAT $	MAT #
2-165-8-V	0.5°	35%	200LBS/FT³	$115,046	$7,744	3,695 #'S
2-180-6-V	0.5°					
2-250-4-V	0.5°					
TOTALS				$115,046	$7,744	3,695 #'S

OPTION 2
(2ND DECK VOIDS 0.5° LIST)

TANK	LIST	PERCENT	TYPE	PROD $	MAT $	MAT #
2-165-8-V	0.5°	22%	325LBS/FT³	$72,314	$4,867	2,322 #'S
2-180-6-V	0.5°					
2-250-4-V	0.5°					
TOTALS				$72,314	$4,867	2,322 #'S

PERMA BALLAST ® INSTALLATION

OPTION 3
(4TH DECK VOIDS 0.5° LIST)

TANK	LIST	PERCENT	TYPE	PROD $	MAT $	MAT #
4-96-2-V	0.5°					
4-100-4-V	0.5°					
4-104-2-V	0.5°					
4-108-2-V	0.5°					
4-113-4-V	0.5°					
4-118-2-V	0.5°					
4-123-6-V	0.5°					
4-148-2-V	0.5°					
4-152-2-V	0.5°	95%	200LBS/FT³	$21,186	$500	0
4-156-2-V	0.5°	95%	200LBS/FT³	$21,186	$500	0
4-160-2-V	0.5°	95%	200LBS/FT³	$21,186	$500	0
4-165-4-V	0.5°					
4-170-2-V	0.5°					
4-175-6-V	0.5°					
4-180-6-V	0.5°					
4-185-4-V	0.5°					
TOTALS				$63,558	$1,500	0

OPTION 4
(4TH DECK VOIDS 0.5° LIST)

TANK	LIST	PERCENT	TYPE	PROD $	MAT $	MAT #
4-96-2-V	0.5°					
4-100-4-V	0.5°					
4-104-2-V	0.5°					
4-108-2-V	0.5°					
4-113-4-V	0.5°					
4-118-2-V	0.5°					
4-123-6-V	0.5°					
4-148-2-V	0.5°	95%	325LBS/FT³	$21,186	$500	0
4-152-2-V	0.5°	95%	325LBS/FT³	$21,186	$500	0
4-156-2-V	0.5°					
4-160-2-V	0.5°					
4-165-4-V	0.5°					
4-170-2-V	0.5°					
4-175-6-V	0.5°					
4-180-6-V	0.5°					
4-185-4-V	0.5°					
TOTALS				$42,372	$1,000	0

PERMA BALLAST ® INSTALLATION

OPTION 5
(8TH DECK VOIDS 0.5° LIST)

TANK	LIST	PERCENT	TYPE	PROD $	MAT $	MAT #
8-210-10-V	0.5°					
8-215-8-V	0.5°					
8-215-10-V	0.5°	95%	200LBS/FT³	$21,186	$500	0
8-220-8-V	0.5°					
8-220-10-V	0.5°	95%	200LBS/FT³	$21,186	$500	0
8-225-6-V	0.5°					
8-225-8-V	0.5°					
8-230-4-V	0.5°					
8-230-6-V	0.5°					
8-235-6-V	0.5°					
8-235-8-V	0.5°					
TOTALS				$42,372	$1,000	0

OPTION 6
(8TH DECK VOIDS 0.5° LIST)

TANK	LIST	PERCENT	TYPE	PROD $	MAT $	MAT #
8-210-10-V	0.5°					
8-215-8-V	0.5°					
8-215-10-V	0.5°	95%	325LBS/FT³	$21,186	$500	0
8-220-8-V	0.5°					
8-220-10-V	0.5°					
8-225-6-V	0.5°					
8-225-8-V	0.5°					
8-230-4-V	0.5°					
8-230-6-V	0.5°					
8-235-6-V	0.5°					
8-235-8-V	0.5°					
TOTALS				$21,186	$500	0

PERMA BALLAST ® INSTALLATION

OPTION 7
(2ND DECK VOIDS 1.0° LIST)

TANK	LIST	PERCENT	TYPE	PROD $	MAT $	MAT #
2-165-8-V	1.0°	74%	200LBS/FT³	$243,240	$16,373	7,811 #'S
2-180-6-V	1.0°					
2-250-4-V	1.0°					
TOTALS				$243,240	$16,373	7,811 #'S

OPTION 8
(2ND DECK VOIDS 1.0° LIST)

TANK	LIST	PERCENT	TYPE	PROD $	MAT $	MAT #
2-165-8-V	1.0°	46%	325LBS/FT³	$151,204	$10,178	4,856 #'S
2-180-6-V	1.0°					
2-250-4-V	1.0°					
TOTALS				$151,204	$10,178	4,856 #'S

PERMA BALLAST ® INSTALLATION

OPTION 9
(4TH DECK VOIDS 1.0° LIST)

TANK	LIST	PERCENT	TYPE	PROD $	MAT $	MAT #
4-96-2-V	1.0°					
4-100-4-V	1.0°					
4-104-2-V	1.0°					
4-108-2-V	1.0°					
4-113-4-V	1.0°					
4-118-2-V	1.0°					
4-123-6-V	1.0°					
4-148-2-V	1.0°					
4-152-2-V	1.0°	95%	200LBS/FT³	$21,186	$500	0
4-156-2-V	1.0°	95%	200LBS/FT³	$21,186	$500	0
4-160-2-V	1.0°	95%	200LBS/FT³	$21,186	$500	0
4-165-4-V	1.0°	95%	200LBS/FT³	$21,186	$500	0
4-170-2-V	1.0°	95%	200LBS/FT³	$21,186	$500	0
4-175-6-V	1.0°	95%	200LBS/FT³	$21,186	$500	0
4-180-6-V	1.0°					
4-185-4-V	1.0°					
TOTALS				$127,116	$3,000	0

OPTION 10
(4TH DECK VOIDS 1.0° LIST)

TANK	LIST	PERCENT	TYPE	PROD $	MAT $	MAT #
4-96-2-V	1.0°					
4-100-4-V	1.0°					
4-104-2-V	1.0°					
4-108-2-V	1.0°					
4-113-4-V	1.0°					
4-118-2-V	1.0°					
4-123-6-V	1.0°					
4-148-2-V	1.0°	95%	325LBS/FT³	$21,186	$500	0
4-152-2-V	1.0°	95%	325LBS/FT³	$21,186	$500	0
4-156-2-V	1.0°	95%	325LBS/FT³	$21,186	$500	0
4-160-2-V	1.0°	95%	325LBS/FT³	$21,186	$500	0
4-165-4-V	1.0°					
4-170-2-V	1.0°					
4-175-6-V	1.0°					
4-180-6-V	1.0°					
4-185-4-V	1.0°					
TOTALS				$84,744	$2,000	0

PERMA BALLAST ® INSTALLATION

OPTION 11
(8TH DECK TANKS 1.0° LIST)

TANK	LIST	PERCENT	TYPE	PROD $	MAT $	MAT #
8-210-10-V	1.0°	95%	200LBS/FT³	$21,186	$500	0
8-215-8-V	1.0°	95%	200LBS/FT³	$21,186	$500	0
8-215-10-V	1.0°	95%	200LBS/FT³	$21,186	$500	0
8-220-8-V	1.0°					
8-220-10-V	1.0°					
8-225-6-V	1.0°					
8-225-8-V	1.0°					
8-230-4-V	1.0°					
8-230-6-V	1.0°					
8-235-6-V	1.0°					
8-235-8-V	1.0°					
TOTALS				$63,558	$1,500	0

OPTION 12
(8TH DECK TANKS 1.0° LIST)

TANK	LIST	PERCENT	TYPE	PROD $	MAT $	MAT #
8-210-10-V	1.0°	95%	325LBS/FT³	$21,186	$500	0
8-215-8-V	1.0°					
8-215-10-V	1.0°	95%	325LBS/FT³	$21,186	$500	0
8-220-8-V	1.0°					
8-220-10-V	1.0°					
8-225-6-V	1.0°					
8-225-8-V	1.0°					
8-230-4-V	1.0°					
8-230-6-V	1.0°					
8-235-6-V	1.0°					
8-235-8-V	1.0°					
TOTALS				$42,372	$1,000	0

PERMA BALLAST® INSTALLATION

OPTION 13
(2ND DECK VOIDS 1.5° LIST)

TANK	LIST	PERCENT	TYPE	PROD $	MAT $	MAT #
2-165-8-V	1.5°	95%	200LBS/FT³	$164,352	$11,063	5,278 #'S
2-180-6-V	1.5°	11%	200LBS/FT³	$57,852	$3,894	1,161 #'S
2-250-4-V	1.5°					
TOTALS				$222,204	$14,957	6,439 #'S

OPTION 14
(2ND DECK VOIDS 1.5° LIST)

TANK	LIST	PERCENT	TYPE	PROD $	MAT $	MAT #
2-165-8-V	1.5°	70%	325LBS/FT³	$230,093	$15,488	7,389#'S
2-180-6-V	1.5°					
2-250-4-V	1.5°					
TOTALS				$230,093	$15,488	7,389#'S

PERMA BALLAST® INSTALLATION

OPTION 15
(4TH DECK VOIDS 1.5° LIST)

TANK	LIST	PERCENT	TYPE	PROD $	MAT $	MAT #
4-96-2-V	1.5°					
4-100-4-V	1.5°					
4-104-2-V	1.5°					
4-108-2-V	1.5°					
4-113-4-V	1.5°					
4-118-2-V	1.5°					
4-123-6-V	1.5°	95%	200LBS/FT³	$21,186	$500	0
4-148-2-V	1.5°	95%	200LBS/FT³	$21,186	$500	0
4-152-2-V	1.5°	95%	200LBS/FT³	$21,186	$500	0
4-156-2-V	1.5°	95%	200LBS/FT³	$21,186	$500	0
4-160-2-V	1.5°	95%	200LBS/FT³	$21,186	$500	0
4-165-4-V	1.5°	95%	200LBS/FT³	$21,186	$500	0
4-170-2-V	1.5°	95%	200LBS/FT³	$21,186	$500	0
4-175-6-V	1.5°	95%	200LBS/FT³	$21,186	$500	0
4-180-6-V	1.5°	95%	200LBS/FT³	$21,186	$500	0
4-185-4-V	1.5°	95%	200LBS/FT³	$21,186	$500	0
TOTALS				$211,860	$5,000	0

OPTION 16
(4TH DECK VOIDS 1.5° LIST)

TANK	LIST	PERCENT	TYPE	PROD $	MAT $	MAT #
4-96-2-V	1.5°					
4-100-4-V	1.5°					
4-104-2-V	1.5°					
4-108-2-V	1.5°					
4-113-4-V	1.5°					
4-118-2-V	1.5°					
4-123-6-V	1.5°					
4-148-2-V	1.5°	95%	325LBS/FT³	$21,186	$500	0
4-152-2-V	1.5°	95%	325LBS/FT³	$21,186	$500	0
4-156-2-V	1.5°	95%	325LBS/FT³	$21,186	$500	0
4-160-2-V	1.5°	95%	325LBS/FT³	$21,186	$500	0
4-165-4-V	1.5°	95%	325LBS/FT³	$21,186	$500	0
4-170-2-V	1.5°	95%	325LBS/FT³	$21,186	$500	0
4-175-6-V	1.5°					
4-180-6-V	1.5°					
4-185-4-V	1.5°					
TOTALS				$127,116	$3,000	0

PERMA BALLAST® INSTALLATION

OPTION 17
(8TH DECK TANKS 1.5° LIST)

TANK	LIST	PERCENT	TYPE	PROD $	MAT $	MAT #
8-210-10-V	1.5°	95%	200LBS/FT³	$21,186	$500	0
8-215-8-V	1.5°	95%	200LBS/FT³	$21,186	$500	0
8-215-10-V	1.5°	95%	200LBS/FT³	$21,186	$500	0
8-220-8-V	1.5°	95%	200LBS/FT³	$21,186	$500	0
8-220-10-V	1.5°	95%	200LBS/FT³	$21,186	$500	0
8-225-6-V	1.5°					
8-225-8-V	1.5°					
8-230-4-V	1.5°					
8-230-6-V	1.5°	95%	200LBS/FT³	$21,186	$500	0
8-235-6-V	1.5°					
8-235-8-V	1.5°					
TOTALS				$127,116	$3,000	0

OPTION 18
(8TH DECK TANKS 1.5° LIST)

TANK	LIST	PERCENT	TYPE	PROD $	MAT $	MAT #
8-210-10-V	1.5°	95%	325LBS/FT³	$21,186	$500	0
8-215-8-V	1.5°	95%	325LBS/FT³	$21,186	$500	0
8-215-10-V	1.5°	95%	325LBS/FT³	$21,186	$500	0
8-220-8-V	1.5°					
8-220-10-V	1.5°					
8-225-6-V	1.5°					
8-225-8-V	1.5°					
8-230-4-V	1.5°					
8-230-6-V	1.5°					
8-235-6-V	1.5°					
8-235-8-V	1.5°					
TOTALS				$63,558	$1,500	0

PERMA BALLAST® INSTALLATION

OPTION 19
(2ND DECK VOIDS 2.0° LIST)

TANK	LIST	PERCENT	TYPE	PROD $	MAT $	MAT #
2-165-8-V	2.0°	95%	200LBS/FT³	$164,352	$11,063	5,278 #'S
2-180-6-V	2.0°	36%	200LBS/FT³	$184,074	$12,745	3,800 #'S
2-250-4-V	2.0°					
TOTALS				$348,426	$23,808	9,078 #'S

OPTION 20
(2ND DECK VOIDS 2.0° LIST)

TANK	LIST	PERCENT	TYPE	PROD $	MAT $	MAT #
2-165-8-V	2.0°	95%	325LBS/FT³	$164,352	$11,063	5,278 #'S
2-180-6-V	2.0°					
2-250-4-V	2.0°					
TOTALS				$164,352	$11,063	5,278 #'S

PERMA BALLAST® INSTALLATION

OPTION 21
(4TH DECK VOIDS 2.0° LIST)

TANK	LIST	PERCENT	TYPE	PROD $	MAT $	MAT #
4-96-2-V	2.0°					
4-100-4-V	2.0°					
4-104-2-V	2.0°					
4-108-2-V	2.0°	95%	200LBS/FT³	$21,186	$500	0
4-113-4-V	2.0°	95%	200LBS/FT³	$21,186	$500	0
4-118-2-V	2.0°	95%	200LBS/FT³	$21,186	$500	0
4-123-6-V	2.0°	95%	200LBS/FT³	$21,186	$500	0
4-148-2-V	2.0°	95%	200LBS/FT³	$21,186	$500	0
4-152-2-V	2.0°	95%	200LBS/FT³	$21,186	$500	0
4-156-2-V	2.0°	95%	200LBS/FT³	$21,186	$500	0
4-160-2-V	2.0°	95%	200LBS/FT³	$21,186	$500	0
4-165-4-V	2.0°	95%	200LBS/FT³	$21,186	$500	0
4-170-2-V	2.0°	95%	200LBS/FT³	$21,186	$500	0
4-175-6-V	2.0°	95%	200LBS/FT³	$21,186	$500	0
4-180-6-V	2.0°	95%	200LBS/FT³	$21,186	$500	0
4-185-4-V	2.0°	95%	200LBS/FT³	$21,186	$500	0
TOTALS				$275,418	$6,500	0

OPTION 22
(4TH DECK VOIDS 2.0° LIST)

TANK	LIST	PERCENT	TYPE	PROD $	MAT $	MAT #
4-96-2-V	2.0°					
4-100-4-V	2.0°					
4-104-2-V	2.0°					
4-108-2-V	2.0°					
4-113-4-V	2.0°					
4-118-2-V	2.0°					
4-123-6-V	2.0°					
4-148-2-V	2.0°	95%	325LBS/FT³	$21,186	$500	0
4-152-2-V	2.0°	95%	325LBS/FT³	$21,186	$500	0
4-156-2-V	2.0°	95%	325LBS/FT³	$21,186	$500	0
4-160-2-V	2.0°	95%	325LBS/FT³	$21,186	$500	0
4-165-4-V	2.0°	95%	325LBS/FT³	$21,186	$500	0
4-170-2-V	2.0°	95%	325LBS/FT³	$21,186	$500	0
4-175-6-V	2.0°	95%	325LBS/FT³	$21,186	$500	0
4-180-6-V	2.0°	95%	325LBS/FT³	$21,186	$500	0
4-185-4-V	2.0°					
TOTALS				$169,488	$4,000	0

PERMA BALLAST® INSTALLATION

OPTION 23
(8TH DECK TANKS 2.0° LIST)

TANK	LIST	PERCENT	TYPE	PROD $	MAT $	MAT #
8-210-10-V	2.0°	95%	200LBS/FT³	$21,186	$500	0
8-215-8-V	2.0°	95%	200LBS/FT³	$21,186	$500	0
8-215-10-V	2.0°	95%	200LBS/FT³	$21,186	$500	0
8-220-8-V	2.0°	95%	200LBS/FT³	$21,186	$500	0
8-220-10-V	2.0°	95%	200LBS/FT³	$21,186	$500	0
8-225-6-V	2.0°	95%	200LBS/FT³	$21,186	$500	0
8-225-8-V	2.0°	95%	200LBS/FT³	$21,186	$500	0
8-230-4-V	2.0°					
8-230-6-V	2.0°					
8-235-6-V	2.0°					
8-235-8-V	2.0°					
TOTALS				$148,302	$3,500	0

OPTION 24
(8TH DECK TANKS 2.0° LIST)

TANK	LIST	PERCENT	TYPE	PROD $	MAT $	MAT #
8-210-10-V	2.0°	95%	325LBS/FT³	$21,186	$500	0
8-215-8-V	2.0°	95%	325LBS/FT³	$21,186	$500	0
8-215-10-V	2.0°	95%	325LBS/FT³	$21,186	$500	0
8-220-8-V	2.0°	95%	325LBS/FT³	$21,186	$500	0
8-220-10-V	2.0°					
8-225-6-V	2.0°					
8-225-8-V	2.0°					
8-230-4-V	2.0°					
8-230-6-V	2.0°	95%	325LBS/FT³	$21,186	$500	0
8-235-6-V	2.0°					
8-235-8-V	2.0°					
TOTALS				$105,930	$2,500	0

PERMA BALLAST® INSTALLATION

OPTION 25
(2ND DECK VOIDS 2.5° LIST)

TANK	LIST	PERCENT	TYPE	PROD $	MAT $	MAT #
2-165-8-V	2.5°	95%	200LBS/FT³	$164,352	$11,063	5,278 #'S
2-180-6-V	2.5°	61%	200LBS/FT³	$320,815	$21,595	10,302 #'S
2-250-4-V	2.5°					
TOTALS				$485,167	$32,658	15,580 #'S

OPTION 26
(2ND DECK VOIDS 2.5° LIST)

TANK	LIST	PERCENT	TYPE	PROD $	MAT $	MAT #
2-165-8-V	2.5°	95%	325LBS/FT³	$164,352	$11,063	5,278 #'S
2-180-6-V	2.5°	15%	325LBS/FT³	$78,889	$5,310	2,533 #'S
2-250-4-V	2.5°					
TOTALS				$243,241	$16,373	7,811 #'S

PERMA BALLAST® INSTALLATION

OPTION 27
(4TH DECK VOIDS 2.5° LIST)

TANK	LIST	PERCENT	TYPE	PROD $	MAT $	MAT #
4-96-2-V	2.5°	95%	200LBS/FT³	$21,186	$500	0
4-100-4-V	2.5°	95%	200LBS/FT³	$21,186	$500	0
4-104-2-V	2.5°	95%	200LBS/FT³	$21,186	$500	0
4-108-2-V	2.5°	95%	200LBS/FT³	$21,186	$500	0
4-113-4-V	2.5°	95%	200LBS/FT³	$21,186	$500	0
4-118-2-V	2.5°	95%	200LBS/FT³	$21,186	$500	0
4-123-6-V	2.5°	95%	200LBS/FT³	$21,186	$500	0
4-148-2-V	2.5°	95%	200LBS/FT³	$21,186	$500	0
4-152-2-V	2.5°	95%	200LBS/FT³	$21,186	$500	0
4-156-2-V	2.5°	95%	200LBS/FT³	$21,186	$500	0
4-160-2-V	2.5°	95%	200LBS/FT³	$21,186	$500	0
4-165-4-V	2.5°	95%	200LBS/FT³	$21,186	$500	0
4-170-2-V	2.5°	95%	200LBS/FT³	$21,186	$500	0
4-175-6-V	2.5°	95%	200LBS/FT³	$21,186	$500	0
4-180-6-V	2.5°	95%	200LBS/FT³	$21,186	$500	0
4-185-4-V	2.5°	95%	200LBS/FT³	$21,186	$500	0
TOTALS				$338,976	$8,000	0

OPTION 28
(4TH DECK VOIDS 2.5° LIST)

TANK	LIST	PERCENT	TYPE	PROD $	MAT $	MAT #
4-96-2-V	2.5°					
4-100-4-V	2.5°					
4-104-2-V	2.5°					
4-108-2-V	2.5°					
4-113-4-V	2.5°					
4-118-2-V	2.5°					
4-123-6-V	2.5°	95%	325LBS/FT³	$21,186	$500	0
4-148-2-V	2.5°	95%	325LBS/FT³	$21,186	$500	0
4-152-2-V	2.5°	95%	325LBS/FT³	$21,186	$500	0
4-156-2-V	2.5°	95%	325LBS/FT³	$21,186	$500	0
4-160-2-V	2.5°	95%	325LBS/FT³	$21,186	$500	0
4-165-4-V	2.5°	95%	325LBS/FT³	$21,186	$500	0
4-170-2-V	2.5°	95%	325LBS/FT³	$21,186	$500	0
4-175-6-V	2.5°	95%	325LBS/FT³	$21,186	$500	0
4-180-6-V	2.5°	95%	325LBS/FT³	$21,186	$500	0
4-185-4-V	2.5°	95%	325LBS/FT³	$21,186	$500	0
TOTALS				$211,860	$5,000	0

PERMA BALLAST® INSTALLATION

OPTION 29
(8TH DECK TANKS 2.5° LIST)

TANK	LIST	PERCENT	TYPE	PROD $	MAT $	MAT #
8-210-10-V	2.5°	95%	200LBS/FT³	$21,186	$500	0
8-215-8-V	2.5°	95%	200LBS/FT³	$21,186	$500	0
8-215-10-V	2.5°	95%	200LBS/FT³	$21,186	$500	0
8-220-8-V	2.5°	95%	200LBS/FT³	$21,186	$500	0
8-220-10-V	2.5°	95%	200LBS/FT³	$21,186	$500	0
8-225-6-V	2.5°	95%	200LBS/FT³	$21,186	$500	0
8-225-8-V	2.5°	95%	200LBS/FT³	$21,186	$500	0
8-230-4-V	2.5°	95%	200LBS/FT³	$21,186	$500	0
8-230-6-V	2.5°	95%	200LBS/FT³	$21,186	$500	0
8-235-6-V	2.5°					
8-235-8-V	2.5°					
TOTALS				$190,674	$4,500	0

OPTION 30
(8TH DECK TANKS 2.5° LIST)

TANK	LIST	PERCENT	TYPE	PROD $	MAT $	MAT #
8-210-10-V	2.5°	95%	325LBS/FT³	$21,186	$500	0
8-215-8-V	2.5°	95%	325LBS/FT³	$21,186	$500	0
8-215-10-V	2.5°	95%	325LBS/FT³	$21,186	$500	0
8-220-8-V	2.5°	95%	325LBS/FT³	$21,186	$500	0
8-220-10-V	2.5°	95%	325LBS/FT³	$21,186	$500	0
8-225-6-V	2.5°					
8-225-8-V	2.5°	95%	325LBS/FT³	$21,186	$500	0
8-230-4-V	2.5°					
8-230-6-V	2.5°					
8-235-6-V	2.5°					
8-235-8-V	2.5°					
TOTALS				$127,116	$3,000	0

PERMA BALLAST® INSTALLATION

OPTION 31
(2ND DECK VOIDS 3.0° LIST)

TANK	LIST	PERCENT	TYPE	PROD $	MAT $	MAT #
2-165-8-V	3.0°	95%	200LBS/FT³	$164,352	$11,063	5,278 #'S
2-180-6-V	3.0°	95%	200LBS/FT³	$226,161	$15,222	7,262 #'S
2-250-4-V	3.0°					
TOTALS				$390,513	$26,285	12,540 #'S

OPTION 32
(2ND DECK VOIDS 3.0° LIST)

TANK	LIST	PERCENT	TYPE	PROD $	MAT $	MAT #
2-165-8-V	3.0°	95%	325LBS/FT³	$164,352	$11,063	5,278 #'S
2-180-6-V	3.0°	30%	325LBS/FT³	$157,778	$10,621	5,067 #'S
2-250-4-V	3.0°					
TOTALS				$322,130	$21,684	10,345 #'S

PERMA BALLAST® INSTALLATION

OPTION 33
(4TH DECK VOIDS 3.0° LIST)

TANK	LIST	PERCENT	TYPE	PROD $	MAT $	MAT #
4-96-2-V	3.0°					
4-100-4-V	3.0°					
4-104-2-V	3.0°					
4-108-2-V	3.0°					
4-113-4-V	3.0°					
4-118-2-V	3.0°					
4-123-6-V	3.0°					
4-148-2-V	3.0°					
4-152-2-V	3.0°					
4-156-2-V	3.0°					
4-160-2-V	3.0°					
4-165-4-V	3.0°					
4-170-2-V	3.0°					
4-175-6-V	3.0°					
4-180-6-V	3.0°					
4-185-4-V	3.0°					
TOTALS						

OPTION 34
(4TH DECK VOIDS 3.0° LIST)

TANK	LIST	PERCENT	TYPE	PROD $	MAT $	MAT #
4-96-2-V	3.0°					
4-100-4-V	3.0°					
4-104-2-V	3.0°					
4-108-2-V	3.0°					
4-113-4-V	3.0°	95%	325LBS/FT³	$21,186	$500	0
4-118-2-V	3.0°	95%	325LBS/FT³	$21,186	$500	0
4-123-6-V	3.0°	95%	325LBS/FT³	$21,186	$500	0
4-148-2-V	3.0°	95%	325LBS/FT³	$21,186	$500	0
4-152-2-V	3.0°	95%	325LBS/FT³	$21,186	$500	0
4-156-2-V	3.0°	95%	325LBS/FT³	$21,186	$500	0
4-160-2-V	3.0°	95%	325LBS/FT³	$21,186	$500	0
4-165-4-V	3.0°	95%	325LBS/FT³	$21,186	$500	0
4-170-2-V	3.0°	95%	325LBS/FT³	$21,186	$500	0
4-175-6-V	3.0°	95%	325LBS/FT³	$21,186	$500	0
4-180-6-V	3.0°	95%	325LBS/FT³	$21,186	$500	0
4-185-4-V	3.0°	95%	325LBS/FT³	$21,186	$500	0
TOTALS				$254,232	$6,000	0

PERMA BALLAST® INSTALLATION

OPTION 35
(8TH DECK VOIDS 3.0° LIST)

TANK	LIST	PERCENT	TYPE	PROD $	MAT $	MAT #
8-210-10-V	3.0°	95%	200LBS/FT³	$21,186	$500	0
8-215-8-V	3.0°	95%	200LBS/FT³	$21,186	$500	0
8-215-10-V	3.0°	95%	200LBS/FT³	$21,186	$500	0
8-220-8-V	3.0°	95%	200LBS/FT³	$21,186	$500	0
8-220-10-V	3.0°	95%	200LBS/FT³	$21,186	$500	0
8-225-6-V	3.0°	95%	200LBS/FT³	$21,186	$500	0
8-225-8-V	3.0°	95%	200LBS/FT³	$21,186	$500	0
8-230-4-V	3.0°	95%	200LBS/FT³	$21,186	$500	0
8-230-6-V	3.0°	95%	200LBS/FT³	$21,186	$500	0
8-235-6-V	3.0°	95%	200LBS/FT³	$21,186	$500	0
8-235-8-V	3.0°	95%	200LBS/FT³	$21,186	$500	0
TOTALS				$233,046	$5,500	0

OPTION 36
(8TH DECK VOIDS 3.0° LIST)

TANK	LIST	PERCENT	TYPE	PROD $	MAT $	MAT #
8-210-10-V	3.0°	95%	325LBS/FT³	$21,186	$500	0
8-215-8-V	3.0°	95%	325LBS/FT³	$21,186	$500	0
8-215-10-V	3.0°	95%	325LBS/FT³	$21,186	$500	0
8-220-8-V	3.0°	95%	325LBS/FT³	$21,186	$500	0
8-220-10-V	3.0°	95%	325LBS/FT³	$21,186	$500	0
8-225-6-V	3.0°	95%	325LBS/FT³	$21,186	$500	0
8-225-8-V	3.0°					
8-230-4-V	3.0°					
8-230-6-V	3.0°	95%	325LBS/FT³	$21,186	$500	0
8-235-6-V	3.0°					
8-235-8-V	3.0°					
TOTALS				$148,302	$3,500	0

Appendix D: Preliminary Cost Comparison

List (Degrees)	0.5						1						1.5					
Ballast Density	(200 lbs/ft^3)			(325 lbs/ft^3)			(200 lbs/ft^3)			(325 lbs/ft^3)			(200 lbs/ft^3)			(325 lbs/ft^3)		
Tank Location	2nd Deck	4th Deck	8th Deck	2nd Deck	4th Deck	8th Deck	2nd Deck	4th Deck	8th Deck	2nd Deck	4th Deck	8th Deck	2nd Deck	4th Deck	8th Deck	2nd Deck	4th Deck	8th Deck
Production Cost ($)	115,046	63,558	42,372	72,314	42,372	21,186	243,240	127,116	63,558	151,204	84,744	42,372	222,204	211,860	127,116	230,093	127,116	63,558
Material Cost ($)	7,744	1,500	1,000	4,867	1,000	500	16,373	3,000	1,500	10,178	2,000	1,000	14,957	5,000	3,000	15,488	3,000	1,500
Perma Cost ($)	127,900	134,650	136,900	198,025	211,250	219,300	158,950	174,025	179,200	277,375	311,875	355,575	189,775	223,075	225,100	356,725	421,125	453,900
Total Cost ($)	**250,690**	**199,708**	**180,272**	**275,206**	**254,622**	**240,986**	**418,563**	**304,141**	**244,258**	**438,757**	**398,619**	**398,947**	**426,936**	**439,935**	**355,216**	**602,306**	**551,241**	**518,958**
Material Weight (Ltons)	1.65	0	0	1.04	0	0	3.49	0	0	2.17	0	0	2.87	0	0	3.30	0	0
Perma Weight (Ltons)	124	154	164	127	150	164	262	329	352	265	325	401	399	547	556	403	515	572
Total Weight (Ltons)	**125.65**	**154**	**164**	**128.04**	**150**	**164**	**265.49**	**329**	**352**	**267.17**	**325**	**401**	**401.87**	**547**	**556**	**406.30**	**515**	**572**
Δ KG (ft)	0.02	0.00	-0.02	0.02	0.00	-0.02	0.04	-0.01	-0.05	0.03	-0.01	-0.05	0.05	-0.03	-0.08	0.05	-0.02	-0.08

**Perma cost estimates based on $100,000 + $225/lt for 200 lbs/ft^3 and $125,000 + $575/lt for 325 lbs/ft^3

List (Degrees)	2						2.5						3					
Ballast Density	(200 lbs/ft^3)			(325 lbs/ft^3)			(200 lbs/ft^3)			(325 lbs/ft^3)			(200 lbs/ft^3)			(325 lbs/ft^3)		
Tank Location	2nd Deck	4th Deck	8th Deck	2nd Deck	4th Deck	8th Deck	2nd Deck	4th Deck	8th Deck	2nd Deck	4th Deck	8th Deck	2nd Deck	4th Deck	8th Deck	2nd Deck	4th Deck	8th Deck
Production Cost ($)	348,426	275,418	148,302	164,352	169,488	105,930	485,167	338,976	190,674	243,241	211,860	127,116	390,513		233,046	322,130	254,232	148,302
Material Cost ($)	23,808	6,500	3,500	11,063	4,000	2,500	32,658	8,000	4,500	16,373	5,000	3,000	26,285		5,500	21,684	6,000	3,500
Perma Cost ($)	221,275	261,550	288,325	439,525	529,225	586,150	252,775	292,600	340,750	517,725	636,175	684,475	295,525		408,700	596,500	744,275	867,900
Total Cost ($)	**593,509**	**543,468**	**440,127**	**614,940**	**702,713**	**694,580**	**770,600**	**639,576**	**535,924**	**777,339**	**853,035**	**814,591**	**712,323**	**N/A**	**647,246**	**940,314**	**1,004,507**	**1,019,702**
Material Weight (Ltons)	4.05	0	0	2.36	0	0	6.96	0	0	3.49	0	0	5.60		0	4.62	0	0
Perma Weight (Ltons)	539	718	837	547	703	802	679	856	1,070	683	889	973	869		1,372	820	1,077	1,292
Total Weight (Ltons)	**543.05**	**718**	**837**	**549.36**	**703**	**802**	**685.96**	**856**	**1,070**	**686.49**	**889**	**973**	**874.60**	**N/A**	**1,372**	**824.62**	**1,077**	**1,292**
Δ KG (ft)	0.07	-0.04	-0.11	0.08	-0.03	-0.11	0.09	-0.04	-0.15	0.09	-0.05	-0.14	0.12		-0.18	0.10	-0.06	-0.19

**Perma cost estimates based on $100,000 + $225/lt for 200 lbs/ft^3 and $125,000 + $575/lt for 325 lbs/ft^3

**Yellow indicates voids not sufficient on deck to ballast necessary amount

Appendix E: Complete Structural Analysis

Structural Analysis for Compartment 2-165-8-V: Shell Plating

Perma Ballast® Data

$\rho_{Perma} := 200\frac{lb}{ft^3}$ Density of Perma Ballast®

$\%_{Perma_fill} := .95$ Based on 95% Fillable Volume

Conversion Factors

$1ton := 2240lb$

$\rho_{sw} := 64.4\frac{lb}{ft^3}$ Density of Seawater

Compartment 2-165-8-V

$Volume := 3969ft^3$ Volume of Compartment

$W_{Perma} := 354ton$ Weight of Permanent Ballast

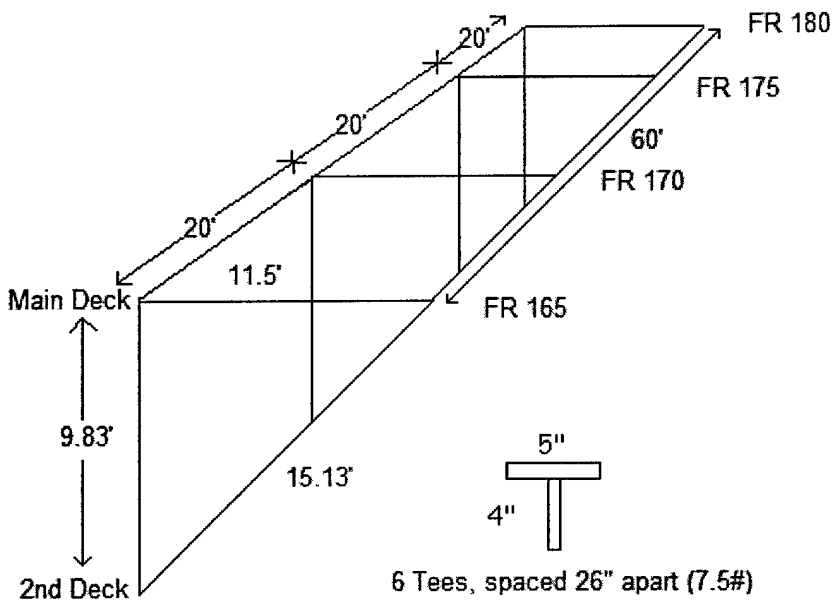

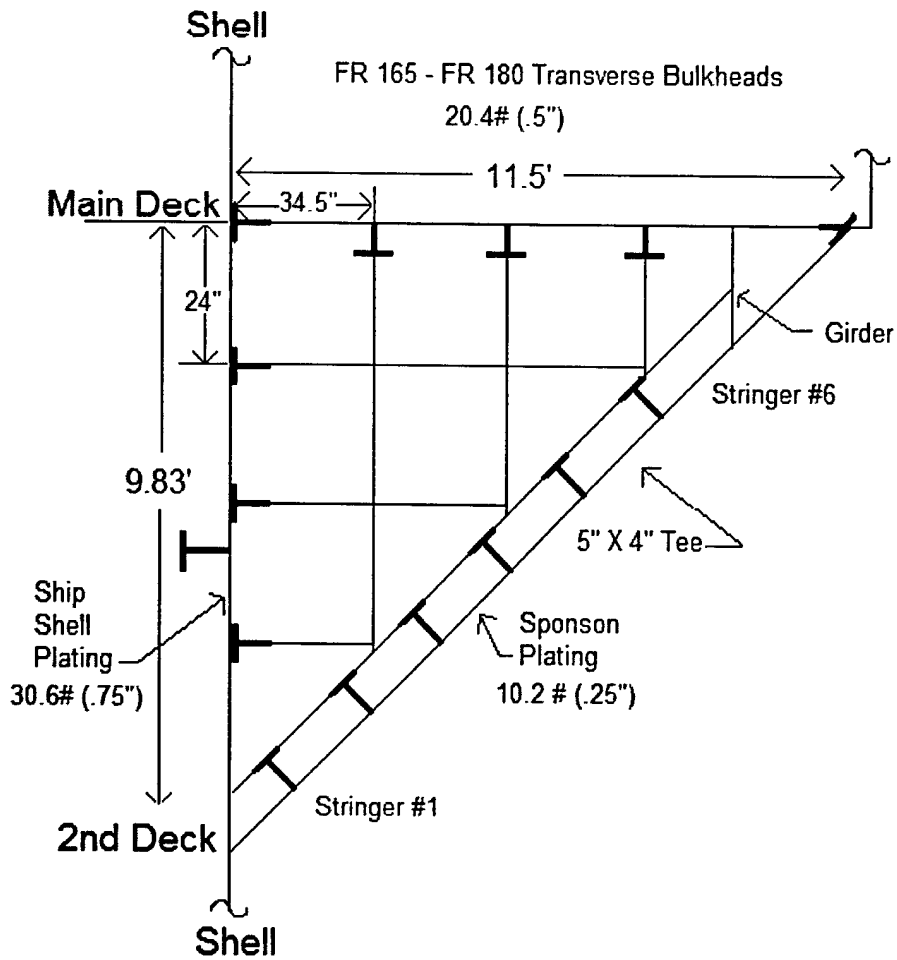

Ship Motion Factors:

$V := 1.25$ Vertical $\alpha := \operatorname{asin}\left(\frac{11.5}{15.13}\right)$ $\alpha = 49.471\text{deg}$

$A := 0.75$ Athwartship $\beta := \operatorname{asin}\left(\frac{9.83}{15.13}\right)$ $\beta = 40.519\text{deg}$

$F := 0.4$ Fore/Aft

Loading on Shell Plating:

$W_{Perma} = 7.93\times 10^5\ \text{lb}$ Weight of Perma Ballast®

$F_V := V \cdot W_{Perma}$ $F_V = 9.912\times 10^5\ \text{lb}$ Vertical Load (Downward)

$F_A := A \cdot W_{Perma}$ $F_A = 5.947\times 10^5\ \text{lb}$ Athwartship Load (Port)

$F_F := F \cdot W_{Perma}$ $F_F = 3.172\times 10^5\ \text{lb}$ Fore/Aft Load

$F_N := F_V \cdot \cos(\beta) + F_A \cdot \cos(\alpha)$ $F_N = 1.14\times 10^6\ \text{lb}$ Normal Force

Resulting Pressure on Sponson Plating:

Compartment Dimensions:

$L := 60ft$ $\quad Ht := 15.13ft$

$Area := L \cdot Ht$ $\quad Area = 907.8ft^2$

$P := \frac{F_N}{Area}$ $\quad P = 1.256 \times 10^3 \frac{lb}{ft^2}$ $\quad P = 8.72 \frac{lb}{in^2}$

$P_{95\%} := \%_{Perma_fill} \cdot P$ $\quad P_{95\%} = 1.193 \times 10^3 \frac{lb}{ft^2}$ Based on 95% Fillable Volume

$H := \frac{P_{95\%}}{\rho_{sw}}$ $\quad H = 18.524ft$ Equivalent Head

In accordance with CVN 76 Specs, sponson plating aft of Frame 88 shall be designed for 1000 psf. Therefore, less ballast must be added to these sponson voids.

1193 psf > 1000 psf

Design of Plating for Surface Ships, IAW General Specs (Section100)

Panels of plating shall be proportioned so as not to exceed the breadth-thickness ratios found below:

$b := 26in$ $\quad a := 240in$ $\quad AR := \frac{b}{a}$ $\quad AR = 0.108$

$t_{actual} := .25in$ Thickness of Plate, HTS

$H = 18.524ft$ Head of Water

$K := 1$ For AR = 0.108, IAW with Table I of the General Specs (Section 100)

$C := 400ft^{.5}$ For HTS, No Set, IAW with Table I of the General Specs (Section 100)

$$\frac{b}{t} \le \frac{C}{K \cdot \sqrt{H}}$$

b = short dimension of the panel (inches)

t = thickness of the plate (inches)

C = Coefficient that is a function of the plating material and the location of the plating on the ship

K = coefficient that depends on the aspect ratio (AR) of the panel

H = Head of salt water (feet)

$$t_{min} := \frac{K \cdot \sqrt{H} \cdot b}{C}$$

$t_{min} = 0.28in$

Note: The stiffeners are assumed to be spaced evenly across the sponson shell plating with 6 stiffeners spanning 15.13'.

The minimum thickness calculated for this section of plate to meet Navy Structural Standards with no set is .28 in. The actual plate thickness is .25 in. Therefore, the 2nd deck shell plating must either be stiffened or have less ballast added. It should be noted,
however, that some structural margin exists within these calculations and that .28 is close enough to .25 in. As a result, it is possible that stiffening is not required for the 2nd deck shell sponson plating.

t_min > t_actual

Calculations to Determine Maximum Ballast Weight:

Ship Motion Factors:

$V := 1.25$ Vertical

$A := 0.75$ Athwartship

$F := 0.4$ Fore/Aft

Resulting Pressure on Sponson Plating:

Compartment Dimensions:

$L := 60ft$ $Ht := 15.13ft$

$Area := L \cdot Ht$ $Area = 907.8ft^2$

$P := 1000 \cdot \frac{lb}{ft^2}$ Maximum pressure allowed for sponson shell plating IAW CVN 76 Specs

$F_{N_new} := P \cdot Area$ $F_{N_new} = 9.078 \times 10^5 lb$

$H := \frac{P}{\rho_{sw}}$ $H = 15.528ft$ New Equivalent Head

Loading on Shell Plating:

$\alpha := asin\left(\frac{11.5}{15.13}\right)$ $\alpha = 49.471deg$

$\beta := asin\left(\frac{9.83}{15.13}\right)$ $\beta = 40.519deg$

$F_{N_new} = F_{V_new} \cdot cos(\beta) + F_{A_new} \cdot cos(\alpha)$

$F_{V_new} = V \cdot W_{Perma}$ Vertical Load (Downward)

$F_{A_new} = A \cdot W_{Perma}$ Athwartship Load (Port)

$F_{N_new} = V \cdot W_{Perma} \cdot cos(\beta) + A \cdot W_{Perma} \cdot cos(\alpha)$

$$W_{Perma} := \frac{F_{N_new}}{(V \cdot cos(\beta) + A \cdot cos(\alpha))}$$

$\boxed{W_{Perma} = 281.904ton}$ Weight of Perma Ballast® that cannot be exceeded

Calculations to Determine Strength Corrections:

$t_{min} := .25in$ Thickness of Plate, HTS

$H = 15.528ft$ Head of Water (With new head of water calculated using maximum allowable ballast addition)

$K := 1$ Assume AR remains less than .5

$C := 400ft^{.5}$ For HTS, No Set

$$\frac{b}{t} \le \frac{C}{K \cdot \sqrt{H}}$$

b = short dimension of the panel (inches)
t = thickness of the plate (inches)
C = Coefficient that is a function of the plating material and the location of the plating on the ship
K = coefficient that depends on the aspect ratio (AR) of the panel
H = Head of salt water (feet)

$$b_{limit} := t_{min} \cdot \frac{C}{K \cdot H^{\frac{1}{2}}} \qquad b = 26in \qquad \frac{b}{2} = 13in$$

$b_{limit} = 25.377in$

25.377 in is the maximum distance that the stiffeners can be apart and have no plastic deformation to the existing .25 in plating. The current stiffeners are located 26 in apart. It is recommended that the stiffeners be placed less than maximum distance apart. Therefore, adding a vertical stiffener in the middle of each existing stiffener on the shell sponson plating will put b at 13 in and meet the 25.377 in requirement.

Results

A combination of Lesser Weight Addition to meet the 1000psf limit along with adding a stiffener in the middle of each existing stiffener will alleviate any structural concerns.

Stress Calculations:

$$\sigma := k \cdot P \cdot \left(\frac{b}{t}\right)^2$$

k = coefficient that depends on the plate edge conditions, aspect ratio (AR) of the panel, and position of point being considered

p = pressure based on 1000 psf on sponson shell plating

b = panel width
a = panel length
t = plate thickness

$k_{simply_supported} := .75$ $\quad k_{clamped} := .5$ k values are most conservative

$a := 20ft$ $\quad b := 13in$ based on 13 in separation between stiffeners

$P = 6.944\frac{lb}{in^2}$ $\quad t := .25in$

$\sigma_{max_allowable} = 40{,}000\frac{lb}{in^2}$ IAW with the General Specs (Section 100)

$$\sigma_{simply_supported} := k_{simply_supported} \cdot P \cdot \left(\frac{b}{t}\right)^2$$

$$\sigma_{simply_supported} = 14083\frac{lb}{in^2}$$

$$\sigma_{clamped} := k_{clamped} \cdot P \cdot \left(\frac{b}{t}\right)^2$$

Maximum Allowable Stress for HTS is 40,000 psi. By adding stiffeners at 13 in, the stress falls well below that of simply supported and that of clamped. Simply supported and clamped structural cases are idealizations of structural member support illustrating zero stiffness and infinite stiffness, neither of which exists in any real-world structural system. On board ship, structural systems can be conveniently approximated by one or the other case, but in fact have stiffness between one or the other. Navy structural analysis is based off clamped ends, therefore the stress should be well below maximum allowable.

$$\sigma_{clamped} << \sigma_{max_allowable}$$

C coefficient derivation from beam theory:

Panel is considered a series of beams having FIXED ends.

$I := \frac{1}{12} \cdot 1 \cdot t^3$ $\qquad q := \frac{\gamma \cdot H}{144}$

$\sigma_{x_max} := \frac{\frac{1}{12} \cdot q \cdot b^2}{I} \cdot \frac{t}{2}$ $\qquad$ plate bending now equivalent to Navy's standard, see Eqn 2

$b_over_t := \sqrt{\frac{\sigma_{x_max} \cdot 288}{\gamma}} \frac{1}{\sqrt{H}}$ $\qquad \gamma := 64.4$

$\sigma_{x_max} := 4000($ $\qquad$ without introducing K factor, used for shorter panels

$C := \sqrt{\frac{\sigma_{x_max} \cdot 288}{\gamma}}$ $\qquad C = 422.944$

$b_over_t \le \frac{353.861}{\sqrt{H}}$

Calculations to Determine Strength Corrections:

$t_{min} := .25in$ $\qquad$ Thickness of Plate, HTS

$H = 15.528ft$ $\qquad$ Head of Water (With new head of water calculated using maximum allowable ballast addition)

$K := 1$ $\qquad$ Assume AR remains less than .5

$C := 422.944ft^{.5}$ $\qquad$ For HTS, No Set

$$\frac{b}{t} \le \frac{C}{K \cdot \sqrt{H}}$$

b = short dimension of the panel (inches)
t = thickness of the plate (inches)
C = Coefficient that is a function of the plating material and the location of the plating on the ship
K = coefficient that depends on the aspect ratio (AR) of the panel
H = Head of salt water (feet)

$b_{limit} := t_{min} \cdot \frac{C}{K \cdot H^{\frac{1}{2}}}$ $\qquad b_{limit} = 26.833in$

Stress Calculations:

k = coefficient that depends on the plate edge conditions, aspect ratio (AR) of the panel, and position of point being considered

$\sigma := k \cdot P \cdot \left(\frac{b}{t}\right)^2$ p = pressure based on 1000 psf on sponson shell plating

b = panel width
a = panel length
t = plate thickness

$k_{simply_supported} := .75$ $\qquad$ $k_{clamped} := .5$

$a := 20ft$ $\qquad$ $b_{limit} = 26.833in$

$AR := \frac{a}{b}$ $\qquad$ $AR = 18.462$

$P = 6.944\frac{lb}{in^2}$ $\qquad$ $t := .25in$

$\sigma_{max_allowable} = 40,000\frac{lb}{in^2}$ $\qquad$ IAW with the General Specs (Section 100)

$$\sigma_{simply_supported} := k_{simply_supported} \cdot P \cdot \left(\frac{b_{limit}}{t}\right)^2$$

$$\sigma_{simply_supported} = 60000\frac{lb}{in^2}$$

$$\sigma_{clamped} := k_{clamped} \cdot P \cdot \left(\frac{b_{limit}}{t}\right)^2$$

$$\sigma_{clamped} = 40000\frac{lb}{in^2}$$

Structural Analysis for Compartment 2-165-8-V: Ship Shell Plating Inner Longitudinal Bulkhead

Perma Ballast® Data

$\rho_{Perma} := 200\frac{lb}{ft^3}$ Density of Perma Ballast®

$\%_{Perma_fill} := .95$ Based on 95% Fillable Volume

Conversion Factors

$lton := 2240lb$

$\rho_{sw} := 64.4\frac{lb}{ft^3}$ Density of Seawater

Compartment 2-165-8-V

$Volume := 3969ft^3$ Volume of Compartment

$W_{Perma} := 28lton$ Maximum Weight of Permanent Ballast that can be added in accordance with shell plating stress calculations

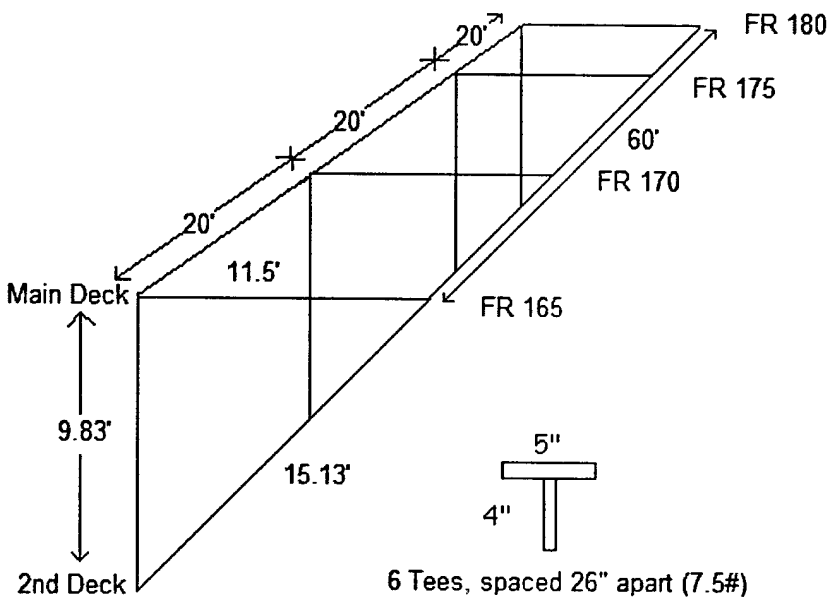

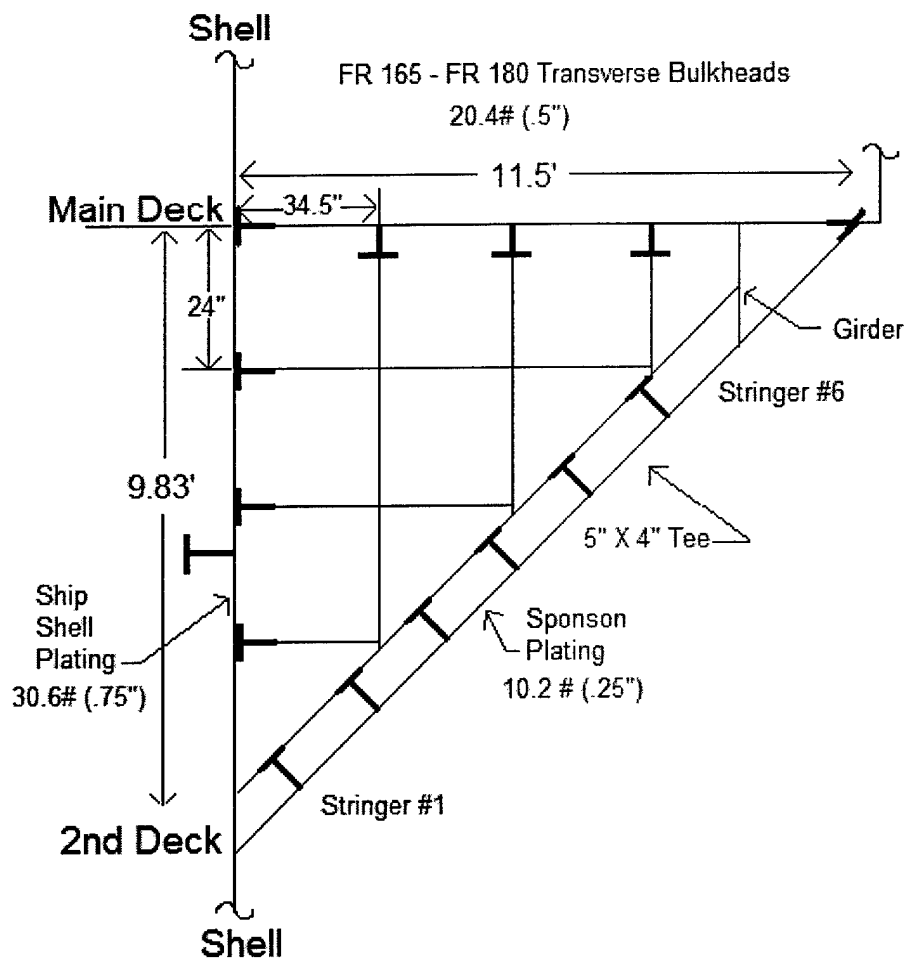

Ship Motion Factors:

$V := 1.25$	Vertical
$A := 0.75$	Athwartship
$F := 0.4$	Fore/Aft

Loading on Inner Longitudinal Bulkhead Plating:

$W_{Perma} = 6.294\times 10^5$ lb Weight of Perma Ballast®

$F_V := V\cdot W_{Perma}$	$F_V = 7.868\times 10^5$ lb	Vertical Load (Downward)
$F_A := A\cdot W_{Perma}$	$F_A = 4.721\times 10^5$ lb	Athwartship Load (Port)
$F_F := F\cdot W_{Perma}$	$F_F = 2.518\times 10^5$ lb	Fore/Aft Load
$F_N := F_A$	$F_N = 4.721\times 10^5$ lb	Normal Force

Resulting Pressure on Inner Longitudinal Bulkhead Plating:

Compartment Dimensions:

$L := 60ft$ $\quad$ $Ht := 9.83ft$

$Area := L \cdot Ht$ $\quad$ $Area = 589.8ft^2$

$P := \frac{F_N}{Area}$ $\quad$ $P = 800.407\frac{lb}{ft^2}$ $\quad$ $P = 5.558\frac{lb}{in^2}$

$H := \frac{P}{\rho_{sw}}$ $\quad$ $H = 12.429ft$ $\quad$ Equivalent Head

Design of Plating for Surface Ships, IAW General Specs (Section 100)

$b := \frac{9.83}{2}ft$ $\quad a := 240in$ $\quad AR := \frac{b}{a}$ $\quad AR = 0.246$

$t_{actual} := .75in$ Thickness of Plate, HTS

$H = 12.429ft$ Head of Water

$K := 1$ For AR = 0.246, IAW with Table I of the General Specs (Section 100)

$C := 400ft^{.5}$ For HTS, No Set, IAW with Table I of the General Specs (Section 100)

$$\frac{b}{t} \le \frac{C}{K \cdot \sqrt{H}}$$

b = short dimension of the panel (inches)
t = thickness of the plate (inches)
C = Coefficient that is a function of the plating material and the location of the plating on the ship
K = coefficient that depends on the aspect ratio (AR) of the panel
H = Head of salt water (feet)

$$t_{min} := \frac{K \cdot \sqrt{H} \cdot b}{C}$$

$t_{min} = 0.52in$

The minimum thickness calculated for this section of plate to meet Navy Structural Standards with no set is .52 in. The actual plate thickness is .75 in. Therefore, stiffening of the 2nd deck inner longitudinal bulkhead plating is not required.

t_min << t_actual

Calculations to Determine Strength Corrections:

$t_{min} := .75in$ Thickness of Plate, HTS

$H = 12.429ft$ Head of Water (With new head of water calculated using maximum allowable ballast addition)

$K := 1$ Assume AR remains less than .5

$C := 400ft^{.5}$ For HTS, No Set

$$\frac{b}{t} \le \frac{C}{K \cdot \sqrt{H}}$$

b = short dimension of the panel (inches)
t = thickness of the plate (inches)
C = Coefficient that is a function of the plating material and the location of the plating on the ship
K = coefficient that depends on the aspect ratio (AR) of the panel
H = Head of salt water (feet)

$$b_{limit} := t_{min} \cdot \frac{C}{K \cdot H^{\frac{1}{2}}} \qquad b = 58.98in$$

$b_{limit} = 85.096in$

85.096 in is the maximum distance that longitudinal stiffeners can be located apart and have no deformation occur to the .75 in plating. The current stiffener spacing is approximately 58" and well within the limiting width between stiffeners. As a result, the inner longitudinal plating does not need to be stiffened.

Stress Calculations:

$$\sigma := k \cdot P \cdot \left(\frac{b}{t}\right)^2$$

k = coefficient that depends on the plate edge conditions, aspect ratio (AR) of the panel, and position of point being considered

p = pressure based on 95% of maximum ballast addition IAW sponson stress calculations

b = panel width
a = panel length
t = plate thickness

$k_{simply_supported} := .75$ $\quad k_{clamped} := .5$ $\quad$ k values are most conservative

$a := 20ft$ $\quad b := 58in$ $\quad$ based on no stiffener addition

$P = 5.558 \frac{lb}{in^2}$ $\quad t := .75in$

$\sigma_{max_allowable} = 40{,}000 \frac{lb}{in^2}$ $\quad$ IAW with the General Specs (Section 100)

$$\sigma_{simply_supported} := k_{simply_supported} \cdot P \cdot \left(\frac{b}{t}\right)^2$$

$$\sigma_{simply_supported} = 24931 \frac{lb}{in^2}$$

$$\sigma_{clamped} := k_{clamped} \cdot P \cdot \left(\frac{b}{t}\right)^2$$

$$\sigma_{clamped} = 16621 \frac{lb}{in^2}$$

Maximum Allowable Stress for HTS is 40,000 psi. The calcuated stresses fall well below that of simply supported and that of clamped. Simply supported and clamped structural cases are idealizations of structural member support illustrating zero stiffness and infinite stiffness, neither of which exists in any real-world structural system. On board ship, structural systems can be conveniently approximated by one or the other case, but in fact have stiffness between one or the other. Navy structural analysis is based off clamped ends, therefore the stress should be well below maximum allowable.

$$\sigma_{clamped} << \sigma_{max_allowable}$$

Structural Analysis for Compartment 2-165-8-V: Transverse Bulkhead Frames 165, 170, 175, and 180

Perma Ballast® Data

$\rho_{Perma} := 200\frac{lb}{ft^3}$ Density of Perma Ballast®

$\%_{Perma_fill} := .95$ Based on 95% Fillable Volume

Conversion Factors

$lton := 2240lb$

$\rho_{sw} := 64.4\frac{lb}{ft^3}$ Density of Seawater

Compartment 2-165-8-V

$Volume := 3969ft^3$ Volume of Compartment

$W_{Perma} := 28lton$ Maximum Weight of Permanent Ballast that can be added in accordance with shell plating stress calculations

Ship Motion Factors:

$V := 1.25$ Vertical

$A := 0.75$ Athwartship

$F := 0.4$ Fore/Aft

Loading on Transverse Plating:

$W_{Perma} = 6.294\times 10^5 lb$ Weight of Perma Ballast®

$F_V := V\cdot W_{Perma}$ $F_V = 7.868\times 10^5 lb$ Vertical Load (Downward)

$F_A := A\cdot W_{Perma}$ $F_A = 4.721\times 10^5 lb$ Athwartship Load (Port)

$F_F := F\cdot W_{Perma}$ $F_F = 2.518\times 10^5 lb$ Fore/Aft Load

$F_N := F_F$ $F_N = 2.518\times 10^5 lb$ Normal Force

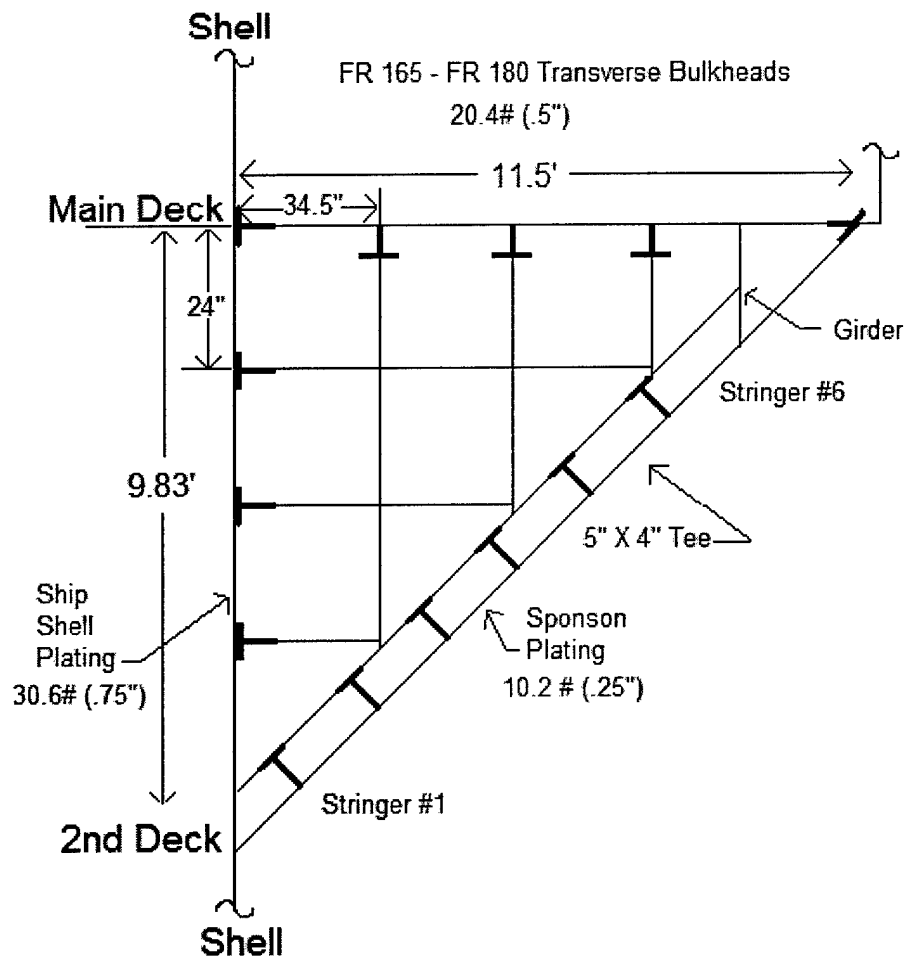

Resulting Pressure on Transverse Plating:

Compartment Dimensions:

$L := 11.5ft$ $\quad$ $Ht := 9.83ft$

$Area := .5L \cdot Ht$ $\quad$ $Area = 56.523ft^2$

$P := \frac{F_N}{Area}$ $\quad$ $P = 4.454 \times 10^3 \frac{lb}{ft^2}$ $\quad$ $P = 30.934 \frac{lb}{in^2}$

$H := \frac{P}{\rho_{sw}}$ $\quad$ $H = 69.168ft$ $\quad$ Equivalent Head

Design of Plating for Surface Ships, IAW General Specs (Section 100)

The transverse plating at Frames 165, 170, 175, and 180 is stiffened by 3 vertical stiffeners and 3 horizontal stiffeners to include a vertical girder that runs from the Main Deck to the shell plating above stringer #6. The largest section of transverse plating that is unstiffened is approximately a 24"X34.5" section of plate. An assumption was made that all vertical stiffeners are spaced equally apart. All structural analysis was performed on this section of plate.

$b := 24in$ $\quad a := 34.5in$ $\quad AR := \frac{b}{a}$ $\quad AR = 0.696$

$t_{actual} := .50in$ Thickness of Plate, HTS

$H = 69.168ft$ Head of Water

$K := .94$ For AR = 0.696, IAW with Table I of the General Specs (Section 100)

$C := 400ft^{.5}$ For HTS, No Set, IAW with Table I of the General Specs (Section 100)

b = short dimension of the panel (inches)
t = thickness of the plate (inches)
C = Coefficient that is a function of the plating material and the location of the plating on the ship

$$\frac{b}{t} \le \frac{C}{K \cdot \sqrt{H}}$$

K = coefficient that depends on the aspect ratio (AR) of the panel

H = Head of salt water (feet)

$$t_{min} := \frac{K \cdot \sqrt{H} \cdot b}{C}$$

$t_{min} = 0.469in$

The minimum thickness calculated for this section of plate to meet Navy Structural Standards with no set is .469 in. The actual plate thickness is .50 in. Therefore, the 2nd deck transverse plating at Frame 165 does not require stiffeneing. Frames 170,175 and 180 are similar in design.

t_min < t_actual

Calculations to Determine Strength Corrections:

$t_{min} := .50in$ Thickness of Plate, HTS

$H = 69.168ft$ Head of Water (With new head of water calculated using maximum allowable ballast addition)

$K := .94$ Assume AR remains .696

$C := 400ft^{.5}$ For HTS, No Set

$$\frac{b}{t} \le \frac{C}{K \cdot \sqrt{H}}$$

b = short dimension of the panel (inches)
t = thickness of the plate (inches)
C = Coefficient that is a function of the plating material and the location of the plating on the ship
K = coefficient that depends on the aspect ratio (AR) of the panel
H = Head of salt water (feet)

$$b_{limit} := t_{min} \cdot \frac{C}{K \cdot H^{\frac{1}{2}}} \qquad b = 24in$$

$b_{limit} = 25.583in$

25.583 in is the maximum distance that longitudinal stiffeners can be located apart and have no deformation occur to the .5 in plating. The transverse plating at Frame 165 has 3 horizontal stiffeners and 3 vertical stiffeners. The current horizontal stiffener spacing is approximately 24" and within the limiting width between stiffeners. As a result, the transverse plating at Frame 165 does not need to be stiffened. Frames 170,175 and 180 are similar in design.

Stress Calculations:

$$\sigma := k \cdot P \cdot \left(\frac{b}{t}\right)^2$$

k = coefficient that depends on the plate edge conditions, aspect ratio (AR) of the panel, and position of point being considered

p = pressure based on 1000 psf on sponson shell plating

b = panel width
a = panel length
t = plate thickness

$k_{simply_supported} := .75$ $\quad k_{clamped} := .5$ $\quad$ k values are most conservative

$a := 34.5in$ $\quad b := 24in$ $\quad$ based on no stiffener addition

$P = 30.934 \frac{lb}{in^2}$ $\quad t := .50in$

$\sigma_{max_allowable} = 40,000 \frac{lb}{in^2}$ $\quad$ IAW with the General Specs (Section 100)

$$\sigma_{simply_supported} := k_{simply_supported} \cdot P \cdot \left(\frac{b}{t}\right)^2$$

$$\sigma_{simply_supported} = 53453 \frac{lb}{in^2}$$

$$\sigma_{clamped} := k_{clamped} \cdot P \cdot \left(\frac{b}{t}\right)^2$$

$$\sigma_{clamped} = 35636 \frac{lb}{in^2}$$

Maximum Allowable Stress for HTS is 40,000 psi. The calcuated stresses falls between that of simply supported and that of clamped. Simply supported and clamped structural cases are idealizations of structural member support illustrating zero stiffness and infinite stiffness, neither of which exists in any real-world structural system. On board ship, structural systems can be conveniently approximated by one or the other case, but in fact have stiffness between one or the other. Navy structural analysis is based off clamped ends, therefore the stress should be well below maximum allowable.

$$\sigma_{clamped} << \sigma_{max_allowable}$$

Structural Analysis for Compartment 2-180-6-V: Shell Plating

Perma Ballast® Data

$\rho_{Perma} := 200\frac{lb}{ft^3}$ Density of Perma Ballast®

$\%_{Perma_fill} := .95$ Based on 95% Fillable Volume

Conversion Factors

$lton := 2240lb$

$\rho_{sw} := 64.4\frac{lb}{ft^3}$ Density of Seawater

Compartment 2-180-6-V

$Volume := 6273ft^3$ Volume of Compartment

$W_{Perma} := 560lton$ Weight of Permanent Ballast

Ship Motion Factors:

$V := 1.25$ Vertical $\alpha := asin\left(\frac{11.5}{15.13}\right)$ $\alpha = 49.471deg$

$A := 0.75$ Athwartship $\beta := asin\left(\frac{9.83}{15.13}\right)$ $\beta = 40.519deg$

$F := 0.4$ Fore/Aft

Loading on Shell Plating:

$W_{Perma} = 1.254\times 10^6 lb$ Weight of Perma Ballast®

$F_V := V \cdot W_{Perma}$ $F_V = 1.568\times 10^6 lb$ Vertical Load (Downward)

$F_A := A \cdot W_{Perma}$ $F_A = 9.408\times 10^5 lb$ Athwartship Load (Port)

$F_F := F \cdot W_{Perma}$ $F_F = 5.018\times 10^5 lb$ Fore/Aft Load

$F_N := F_V \cdot \cos(\beta) + F_A \cdot \cos(\alpha)$ $F_N = 1.803\times 10^6 lb$ Normal Force

Resulting Pressure on Sponson Plating:

Compartment Dimensions:

$L := 96ft$ $\quad$ $Ht := 15.13ft$

$Area := L \cdot Ht$ $\quad$ $Area = 1.452 \times 10^3 ft^2$

$P := \frac{F_N}{Area}$ $\quad$ $P = 1.242 \times 10^3 \frac{lb}{ft^2}$ $\quad$ $P = 8.622 \frac{lb}{in^2}$

$P_{95\%} := \%_{Perma_fill} \cdot P$ $\quad$ $P_{95\%} = 1.179 \times 10^3 \frac{lb}{ft^2}$ $\quad$ Based on 95% Fillable Volume

$H := \frac{P_{95\%}}{\rho_{sw}}$ $\quad$ $H = 18.315ft$ $\quad$ Equivalent Head

In accordance with CVN 76 Specs, sponson plating aft of Frame 88 shall be designed for 1000 psf. Therefore, less ballast must be added to these sponson voids.

1179 psf > 1000 psf

Design of Plating for Surface Ships, IAW General Specs (Section 100)

Panels of plating shall be proportioned so as not to exceed the breadth-thickness ratios found below:

$b := 26in$ $\quad a := 240in$ $\quad AR := \frac{b}{a}$ $\quad AR = 0.108$

$t_{actual} := .25in$ Thickness of Plate, HTS

$H = 18.315ft$ Head of Water

$K := 1$ For AR = 0.108, IAW with Table I of the General Specs (Section 100)

$C := 400ft^{.5}$ For HTS, No Set, IAW with Table I of the General Specs (Section 100)

$$\frac{b}{t} \le \frac{C}{K \cdot \sqrt{H}}$$

b = short dimension of the panel (inches)
t = thickness of the plate (inches)
C = Coefficient that is a function of the plating material and the location of the plating on the ship
K = coefficient that depends on the aspect ratio (AR) of the panel
H = Head of salt water (feet)

$$t_{min} := \frac{K \cdot \sqrt{H} \cdot b}{C}$$

Note: The stiffeners are assumed to be spaced evenly across the sponson shell plating with 6 stiffeners spanning 15.13'.

$t_{min} = 0.278in$

The minimum thickness calculated for this section of plate to meet Navy Structural Standards with no set is .28 in. The actual plate thickness is .25 in. Therefore, the 2nd deck shell plating must either be stiffened or have less ballast added. It should be noted,
however, that some structural margin exists within these calculations and that .28 is close enough to .25 in. As a result, it is possible that stiffening is not required for the 2nd deck shell sponson plating.

t_min > t_actual

Calculations to Determine Maximum Ballast Weight:

Ship Motion Factors:

$V := 1.25$ Vertical

$A := 0.75$ Athwartship

$F := 0.4$ Fore/Aft

Resulting Pressure on Sponson Plating:

Compartment Dimensions:

$L := 96ft$ $Ht := 15.13ft$

$P := 1000 \cdot \frac{lb}{ft^2}$ Maximum pressure allowed for sponson shell plating IAW CVN 76 Specs

$Area := L \cdot Ht$ $Area = 1.452 \times 10^3 ft^2$

$F_{N_new} := P \cdot Area$ $F_{N_new} = 1.452 \times 10^6 lb$

$H := \frac{P}{\rho_{sw}}$ $H = 15.528ft$ New Equivalent Head

Loading on Shell Plating:

$\alpha := asin\left(\frac{11.5}{15.13}\right)$ $\alpha = 49.471deg$

$\beta := asin\left(\frac{9.83}{15.13}\right)$ $\beta = 40.519deg$

$F_{N_new} = F_{V_new} \cdot \cos(\beta) + F_{A_new} \cdot \cos(\alpha)$

$F_{V_new} = V \cdot W_{Perma}$ Vertical Load (Downward)

$F_{A_new} = A \cdot W_{Perma}$ Athwartship Load (Port)

$F_{N_new} = V \cdot W_{Perma} \cdot \cos(\beta) + A \cdot W_{Perma} \cdot \cos(\alpha)$

$$W_{Perma} := \frac{F_{N_new}}{(V \cdot \cos(\beta) + A \cdot \cos(\alpha))}$$

$\boxed{W_{Perma} = 451.047ltons}$ Weight of Perma Ballast® that cannot be exceeded

Calculations to Determine Strength Corrections:

$t_{min} := .25in$ Thickness of Plate, HTS

$H = 15.528ft$ Head of Water (With new head of water calculated using maximum allowable ballast addition)

$K := 1$ Assume AR remains less than .5

$C := 400ft^{.5}$ For HTS, No Set

$$\frac{b}{t} \le \frac{C}{K \cdot \sqrt{H}}$$

b = short dimension of the panel (inches)
t = thickness of the plate (inches)
C = Coefficient that is a function of the plating material and the location of the plating on the ship
K = coefficient that depends on the aspect ratio (AR) of the panel
H = Head of salt water (feet)

$$b_{limit} := t_{min} \cdot \frac{C}{K \cdot H^{\frac{1}{2}}} \qquad b = 26in \qquad \frac{b}{2} = 13in$$

$b_{limit} = 25.377in$

25.377 in is the maximum distance that the stiffeners can be apart and have no plastic deformation to the existing .25 in plating. The current stiffeners are located 26 in apart. It is recommended that the stiffeners be placed less than maximum distance apart. Therefore, adding a vertical stiffener in the middle of each existing stiffener on the shell sponson plating will put b at 13 in and meet the 25.377 in requirement.

Results

A combination of Lesser Weight Addition to meet the 1000psf limit along with adding a stiffener in the middle of each existing stiffener will alleviate any structural concerns.

Stress Calculations:

k = coefficient that depends on the plate edge conditions, aspect ratio (AR) of the panel, and position of point being considered

$\sigma := k \cdot P \cdot \left(\frac{b}{t}\right)^2$ p = pressure based on 1000 psf on sponson shell plating

b = panel width
a = panel length
t = plate thickness

$k_{simply_supported} := .75$ $k_{clamped} := .5$ k values are most conservative

$a := 20ft$ $b := 13in$ based on 13 in separation between stiffeners

$P = 6.944\frac{lb}{in^2}$ $t := .25in$

$\sigma_{max_allowable} = 40,000\frac{lb}{in^2}$ IAW with the General Specs (Section 100)

$\sigma_{simply_supported} := k_{simply_supported} \cdot P \cdot \left(\frac{b}{t}\right)^2$

$\sigma_{simply_supported} = 14083\frac{lb}{in^2}$

$\sigma_{clamped} := k_{clamped} \cdot P \cdot \left(\frac{b}{t}\right)^2$

$\sigma_{clamped} = 9389\frac{lb}{in^2}$

Maximum Allowable Stress for HTS is 40,000 psi. By adding stiffeners at 13 in, the stress falls well below that of simply supported and that of clamped. Simply supported and clamped structural cases are idealizations of structural member support illustrating zero stiffness and infinite stiffness, neither of which exists in any real-world structural system. On board ship, structural systems can be conveniently approximated by one or the other case, but in fact have stiffness between one or the other. Navy structural analysis is based off clamped ends, therefore the stress should be well below maximum allowable.

$\sigma_{clamped} << \sigma_{max_allowable}$

Structural Analysis for Compartment 4-165-4-V: Deck Plating

Perma Ballast® Data

$\rho_{Perma} := 200\frac{lb}{ft^3}$ Density of Perma Ballast®

$\%_{Perma_fill} := .95$ Based on 95% Fillable Volume

Conversion Factors

$lton := 2240lb$

$\rho_{sw} := 64.4\frac{lb}{ft^3}$ Density of Seawater

Compartment 4-165-4-V

$Volume := 700ft^3$ Volume of Compartment

$W_{Perma} := 62lton$ Weight of Permanent Ballast

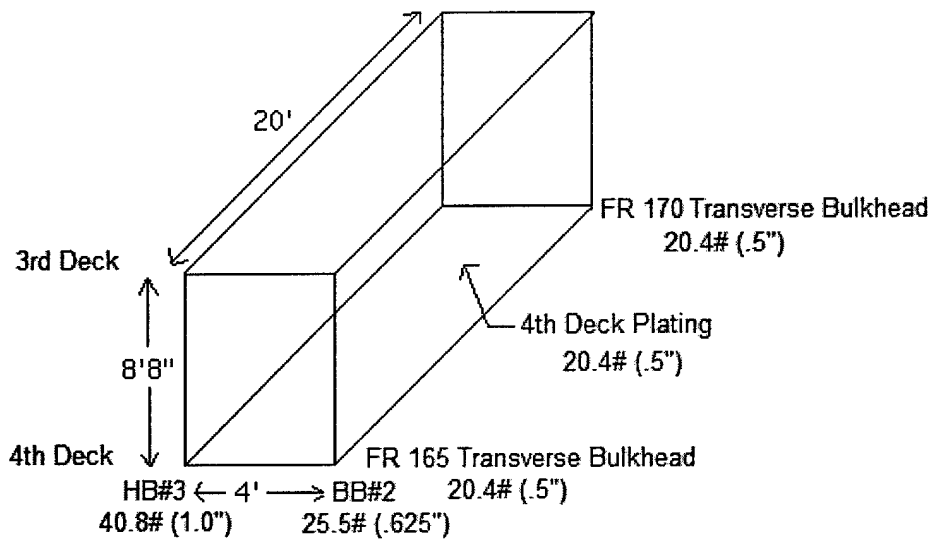

Ship Motion Factors:

$V := 1.25$ Vertical

$A := 0.75$ Athwartship

$F := 0.4$ Fore/Aft

Loading on Deck Plating:

$W_{Perma} = 1.389\times 10^5\ lb$ Weight of Perma Ballast®

$F_V := V\cdot W_{Perma}$ $F_V = 1.736\times 10^5\ lb$ Vertical Load (Downward)

$F_A := A\cdot W_{Perma}$ $F_A = 1.042\times 10^5\ lb$ Athwartship Load (Port)

$F_F := F\cdot W_{Perma}$ $F_F = 5.555\times 10^4\ lb$ Fore/Aft Load

$F_N := F_V$ $F_N = 1.736\times 10^5\ lb$ Normal Force

Resulting Pressure on Deck Plating:

Compartment Dimensions:

$L := 20ft$ $\quad W := 4ft$

$Area := L \cdot W$ $\quad Area = 80ft^2$

$P := \frac{F_N}{Area}$ $\quad P = 2.17 \times 10^3 \frac{lb}{ft^2}$ $\quad P = 15.069 \frac{lb}{in^2}$

$P_{95\%} := \%_{Perma_fill} P$ $\quad P_{95\%} = 1.007 \times 10^4 \frac{kg}{m^2}$ Based on 95% Fillable Volume

$H := \frac{P_{95\%}}{\rho_{sw}}$ $\quad H = 32.011ft$ Equivalent Head

The actual head for flooding of the 4th deck to the 6" above the 2nd deck (DC Deck) will result in a head of 27.7'. This value is below the head calculated above of 32'. As a result, the deck plating must be stiffened.

32 ft > 27.7 ft

Design of Plating for Surface Ships, IAW General Specs (Section 100)

$b := 48in$ $\quad a := 48in$ $\quad AR := \frac{b}{a}$ $\quad AR = 1$

$t_{actual} := .50in$ Thickness of Plate, OS

$H := 27.7ft$ Maximum Head of Water for 4th Deck (which really implies permanent set and may still not be conservative enough)

$K := .78$ For AR = 1, IAW with Table I of the General Specs (Section 100)

$C := 350ft^{.5}$ For OS, No Set, IAW with Table I of the General Specs (Section 100)

$$\frac{b}{t} \le \frac{C}{K \cdot \sqrt{H}}$$

b = short dimension of the panel (inches)
t = thickness of the plate (inches)
C = Coefficient that is a function of the plating material and the location of the plating on the ship
K = coefficient that depends on the aspect ratio (AR) of the panel
H = Head of salt water (feet)

$$t_{min} := \frac{K \cdot \sqrt{H} \cdot b}{C} \qquad t_{min} = 0.563in$$

The minimum thickness calculated for this section of plate to meet Navy Structural Standards with no set is .563 in. The actual plate thickness is .5 in. Therefore, the 4th deck shell plating must either be stiffened or have less ballast added.

t_min >> t_actual

Calculations to Determine Maximum Ballast Weight:

Ship Motion Factors:

$V := 1.25$ Vertical

$A := 0.75$ Athwartship

$F := 0.4$ Fore/Aft

Resulting Pressure on Deck Plating:

Compartment Dimensions:

$L := 20ft$ $W := 4ft$

$Area := L \cdot W$ $Area = 80ft^2$

$H = 27.7ft$ Based on Maximum Equivalent Head or Design Load

$P_{new} := H \cdot \rho_{sw}$ $P_{new} = 12.388 \frac{lb}{in^2}$

$F_{N_new} := P_{new} \cdot Area$

$F_{N_new} = 1.427 \times 10^5 lb$

Loading on Deck Plating:

$F_{N_new} = F_{V_new}$

$F_{V_new} = V \cdot W_{Perma}$ Vertical Load (Downward)

$W_{Perma} := \frac{F_{N_new}}{V}$

$\boxed{W_{Perma} = 50.968 lton}$ Weight of Perma Ballast® that cannot be exceeded

Calculations to Determine Strength Corrections:

$t_{min} := .5in$ Thickness of Plate, OS

$H = 27.7ft$ Head of Water

$K := .78$ Assume AR remains 1

$C := 350ft^{.5}$ For OS, No Set

$$\frac{b}{t} \le \frac{C}{K \cdot \sqrt{H}}$$

b = short dimension of the panel (inches)
t = thickness of the plate (inches)
C = Coefficient that is a function of the plating material and the location of the plating on the ship
K = coefficient that depends on the aspect ratio (AR) of the panel
H = Head of salt water (feet)

$$b_{limit} := t_{min} \cdot \frac{C}{K \cdot H^{\frac{1}{2}}}$$

$b_{limit} = 42.629in$

42.629" is the maximum distance that the stiffeners can be apart and have no elastic deformation to the .5 in plating. The current stiffeners are located 40 in apart. Therefore, according to the Navy Formula, adding a stiffener to the deck plating will not be required IF 50 ltons or less of ballast is added.

Results

Either less ballast must be added to the 4th deck tanks OR stiffening of the deck plating must occur to be less than design load. The design load is the calculated head of water for that deck. Similarly, adding a stiffener down the middle of the deck plating would alleviate any structural concerns. Adding a stiffener cannot, however, be done due to the positioning of the plating. Welding would be required on the bottom deck plating and a watch would need to be stationed on the other side of the deck. The tank below this 4th deck tank is foam filled and a fire watch cannot be stationed. Therefore, the 4th Deck is no longer an option unless the ballast weight to be added be decreased to less than 50 ltons.

Stress Calculations: No Stiffening

$\sigma := k \cdot P \cdot \left(\frac{b}{t}\right)^2$

k = coefficient that depends on the plate edge conditions, aspect ratio (AR) of the panel, and position of point being considered

p = pressure based on 50 ltons of ballast addition

b = panel width
a = panel length
t = plate thickness

$k_{simply_supported} := .75$ $\quad k_{clamped} := .5$ $\quad$ k values are most conservative

$a := 20ft$ $\quad b := 48in$ $\quad$ based on no stiffener addition

$P_{new} = 12.388 \frac{lb}{in^2}$ $\quad t := .5in$

$\sigma_{max_allowable} = 28{,}000 \frac{lb}{in^2}$ $\quad$ IAW with the General Specs (Section 100)

$$\sigma_{simply_supported} := k_{simply_supported} \cdot P_{new} \cdot \left(\frac{b}{t}\right)^2$$

$$\sigma_{simply_supported} = 85626 \frac{lb}{in^2}$$

$$\sigma_{clamped} := k_{clamped} \cdot P_{new} \cdot \left(\frac{b}{t}\right)^2$$

$$\sigma_{clamped} = 57084 \frac{lb}{in^2}$$

Maximum Allowable Stress for OS is 28,000 psi. If no stiffeners are added, the calculated stress is much greater than maximum allowable stress. As a result, stiffeners must still be added to be less than the maximum allowable stress (even with less ballast added and based off design load using maximum head of water).

$$\sigma_{clamped} >> \sigma_{max_allowable}$$

Stress Calculations: Stiffening

$$\sigma := k \cdot P_{new} \cdot \left(\frac{b}{t}\right)^2$$

k = coefficient that depends on the plate edge conditions, aspect ratio (AR) of the panel, and position of point being considered

p = pressure based on 50 ltons of ballast addition

b = panel width
a = panel length
t = plate thickness

$k_{simply_supported} := .75$ $\quad k_{clamped} := .5$ k values are most conservative

$a := 20ft$ $\quad b := 24in$ based on adding a stiffener down the middle of the deck

$P_{new} = 12.388 \frac{lb}{in^2}$ $\quad t := .5in$

$\sigma_{max_allowable} = 28,000 \frac{lb}{in^2}$ IAW with the General Specs (Section 100)

$$\sigma_{simply_supported} := k_{simply_supported} \cdot P_{new} \cdot \left(\frac{b}{t}\right)^2$$

$$\sigma_{simply_supported} = 21407 \frac{lb}{in^2}$$

$$\sigma_{clamped} := k_{clamped} \cdot P_{new} \cdot \left(\frac{b}{t}\right)^2$$

$$\sigma_{clamped} = 14271 \frac{lb}{in^2}$$

Maximum Allowable Stress for OS is 28,000 psi. By adding stiffeners at 24 in AND with the addition of less ballast, the stress falls below that of simply supported and that of clamped. Simply supported and clamped structural cases are idealizations of structural member support illustrating zero stiffness and infinite stiffness, neither of which exists in any real-world structural system. On board ship, structural systems can be conveniently approximated by one or the other case, but in fact have stiffness between one or the other. Navy structural analysis is based off clamped ends, therefore the stress should be well below maximum allowable. As mentioned previously, however, adding ballast to the 4th deck is not feasible due to the inability to stiffen the 4th deck.

$$\sigma_{clamped} << \sigma_{max_allowable}$$

Structural Analysis for Compartment 8-225-6-V: Shell Plating

Perma Ballast® Data

$\rho_{Perma} := 200\frac{lb}{ft^3}$ Density of Perma Ballast®

$\%_{Perma_fill} := .95$ Based on 95% Fillable Volume

Conversion Factors

$lton := 2240lb$

$\rho_{sw} := 64.4\frac{lb}{ft^3}$ Density of Seawater

Compartment 8-225-6-V

$Volume := 2814ft^3$ Volume of Compartment

$W_{Perma} := 251lton$ Weight of Permanent Ballast

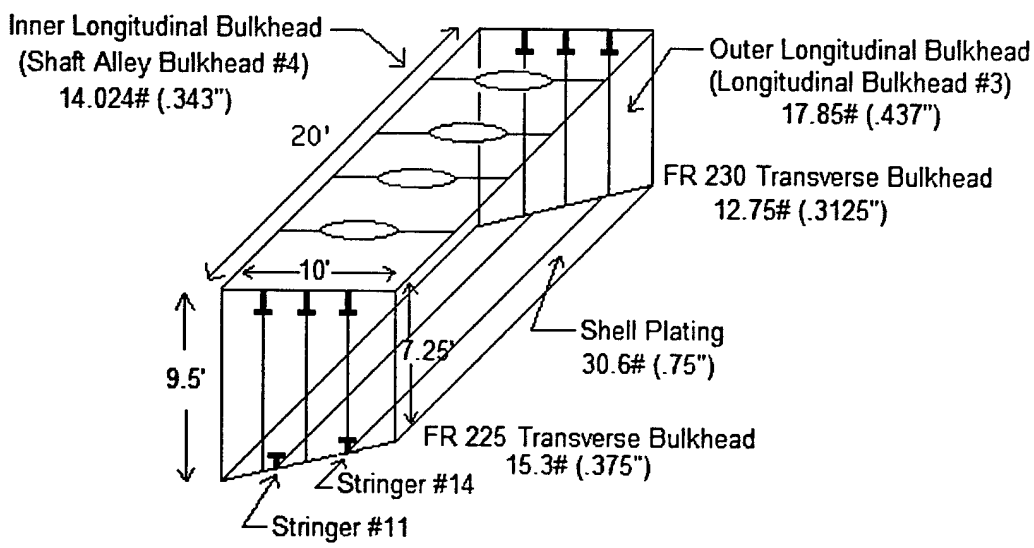

Ship Motion Factors:

$V := 1.25$ Vertical

$A := 0.75$ Athwartship

$F := 0.4$ Fore/Aft

Loading on Shell Plating:

$W_{Perma} = 5.622\times 10^5 lb$ Weight of Perma Ballast®

$F_V := V\cdot W_{Perma}$ $F_V = 7.028\times 10^5 lb$ Vertical Load (Downward)

$F_A := A\cdot W_{Perma}$ $F_A = 4.217\times 10^5 lb$ Athwartship Load (Port)

$F_F := F\cdot W_{Perma}$ $F_F = 2.249\times 10^5 lb$ Fore/Aft Load

$\beta := asin\left(\frac{27}{123}\right)$ $\beta = 12.68deg$

$\alpha := 90deg - \beta$ $\alpha = 77.32deg$

$F_N := F_V\cdot cos(\beta) + F_A\cdot cos(\alpha)$ $F_N = 7.782\times 10^5 lb$ Normal Force

Resulting Pressure on Shell Plating:

Compartment Dimensions:

$L := 20ft$ $\quad Ht := 123in$

$Area := L \cdot Ht$ $\quad Area = 205ft^2$

$P := \frac{F_N}{Area}$ $\quad P = 3.796 \times 10^3 \frac{lb}{ft^2}$ $\quad P = 26.363 \frac{lb}{in^2}$

$P_{95\%} := \%_{Perma_fill} P$ $\quad P_{95\%} = 3.606 \times 10^3 \frac{lb}{ft^2}$ Based on 95% Fillable Volume

$H := \frac{P_{95\%}}{\rho_{sw}}$ $\quad H = 56ft$ Equivalent Head

Design of Plating for Surface Ships, IAW General Specs (Section 100)

$b := 41in$ $\quad a := 240in$ $\quad AR := \frac{b}{a}$ $\quad AR = 0.171$

$t_{actual} := .75in$ Thickness of Plate, HTS

$H = 56ft$ Head of Water

$K := 1$ For AR = 0.171, IAW with Table I of the General Specs (Section 100)

$C := 400ft^{.5}$ For HTS, No Se, IAW with Table I of the General Specs (Section 100)t

b = short dimension of the panel (inches)
t = thickness of the plate (inches)
C = Coefficient that is a function of the plating material and the location of the plating on the ship

$$\frac{b}{t} \le \frac{C}{K \cdot \sqrt{H}}$$

K = coefficient that depends on the aspect ratio (AR) of the panel

H = Head of salt water (feet)

$$t_{min} := \frac{K \cdot \sqrt{H} \cdot b}{C}$$

$t_{min} = 0.767in$

The minimum thickness calculated for this section of plate to meet Navy Structural Standards with no set is .767 in. The actual plate thickness is .75 in. Therefore, the 8th deck shell plating must either be stiffened or have less ballast added.

t_min >> t_actual

Calculations to Determine Strength Corrections:

$t_{min} := .75in$ Thickness of Plate, HTS

$H = 56ft$ Head of Water (With new head of water calculated using maximum allowable ballast addition)

$K := 1$ Assume AR remains less than .5

$C := 400ft^{.5}$ For HTS, No Set

$$\frac{b}{t} \le \frac{C}{K \cdot \sqrt{H}}$$

b = short dimension of the panel (inches)
t = thickness of the plate (inches)
C = Coefficient that is a function of the plating material and the location of the plating on the ship
K = coefficient that depends on the aspect ratio (AR) of the panel
H = Head of salt water (feet)

$$b_{limit} := t_{min} \cdot \frac{C}{K \cdot H^{\frac{1}{2}}}$$

$b_{limit} = 40.089in$

40.089 in is the maximum distance that longitudinal stiffeners can be located apart and have no deformation occur to the .75 in plating. The shell plating has 2 longitudinal stiffeners or stringers located apporoximately 41 in apart. Therefore, stiffening of the existing shell plating will be required for 251 ltons of ballast.

Calculations to Determine Maximum Ballast Weight without stiffening:

$t_{min} := .75in$ Thickness of Plate, HTS

$b_{limit} := 4in$ Short Dimension of Panel

$K := 1$ Assume AR remains less than .5

$C := 400ft^{.5}$ For HTS, No Set

$$\frac{b}{t} \le \frac{C}{K \cdot \sqrt{H}}$$

b = short dimension of the panel (inches)
t = thickness of the plate (inches)
C = Coefficient that is a function of the plating material and the location of the plating on the ship
K = coefficient that depends on the aspect ratio (AR) of the panel
H = Head of salt water (feet)

$$H_{new} := \left(\frac{C \cdot t_{min}}{K \cdot b_{limit}}\right)^2 \qquad H_{new} = 53.54ft$$

$$P_{new} := H_{new} \cdot \rho_{sw} \qquad P_{new} = 23.944 \frac{lb}{in^2}$$

$$F_{N_new} := P_{new} \cdot Area \qquad F_{N_new} = 7.068 \times 10^5 lb$$

$$F_{N_new} = F_{V_new} \cdot \cos(\beta) + F_{A_new} \cdot \cos(\alpha)$$

$F_{V_new} = V \cdot W_{Perma}$ Vertical Load (Downward)

$F_{A_new} = A \cdot W_{Perma}$ Athwartship Load (Port)

$$F_{N_new} = V \cdot W_{Perma} \cdot \cos(\beta) + A \cdot W_{Perma} \cdot \cos(\alpha)$$

$$W_{Perma} := \frac{F_{N_new}}{(V \cdot \cos(\beta) + A \cdot \cos(\alpha))}$$

$$\boxed{W_{Perma} = 227.974 ton}$$

Weight of Perma Ballast® that cannot be exceeded so that stiffening of the 8th deck shell plating will not be required.

Stress Calculations for 227 ltons of ballast:

$$\sigma := k \cdot P_{new} \cdot \left(\frac{b}{t}\right)^2$$

k = coefficient that depends on the plate edge conditions, aspect ratio (AR) of the panel, and position of point being considered

p = pressure based on limiting ballast add for shell plating calculations

b = panel width
a = panel length
t = plate thickness

$k_{simply_supported} := .75$ $\quad k_{clamped} := .5$ k values are most conservative

$a := 20ft$ $\quad b := 41in$ based on 41 in separation between stiffeners

$P_{new} = 23.944 \frac{lb}{in^2}$ $\quad t := .75in$

$\sigma_{max_allowable} = 40,000 \frac{lb}{in^2}$ IAW with the General Specs (Section 100)

$$\sigma_{simply_supported} := k_{simply_supported} \cdot P_{new} \cdot \left(\frac{b}{t}\right)^2$$

$$\sigma_{simply_supported} = 53667 \frac{lb}{in^2}$$

$$\sigma_{clamped} := k_{clamped} \cdot P_{new} \cdot \left(\frac{b}{t}\right)^2$$

$$\sigma_{clamped} = 35778 \frac{lb}{in^2}$$

Maximum Allowable Stress for HTS is 40,000 psi. Without any stiffener addition, the calculated stress falls between that of simply supported and that of clamped. Simply supported and clamped structural cases are idealizations of structural member support illustrating zero stiffness and infinite stiffness, neither of which exists in any real-world structural system. On board ship, structural systems can be conveniently approximated by one or the other case, but in fact have stiffness between one or the other. Navy structural analysis is based off clamped ends, therefore the stress falls below maximum allowable.

$$\sigma_{clamped} < \sigma_{max_allowable}$$

Structural Analysis for Compartment 8-225-6-V: Inner Longitudinal Bulkhead Plating

Perma Ballast® Data

$\rho_{Perma} := 200\frac{lb}{ft^3}$ Density of Perma Ballast®

$\%_{Perma_fill} := .95$ Based on 95% Fillable Volume

Conversion Factors

$lton := 2240lb$

$\rho_{sw} := 64.4\frac{lb}{ft^3}$ Density of Seawater

Compartment 8-225-6-V

$Volume := 2814ft^3$ Volume of Compartment

$W_{Perma} := 227lton$ Weight of Permanent Ballast based off limiting shell calculations

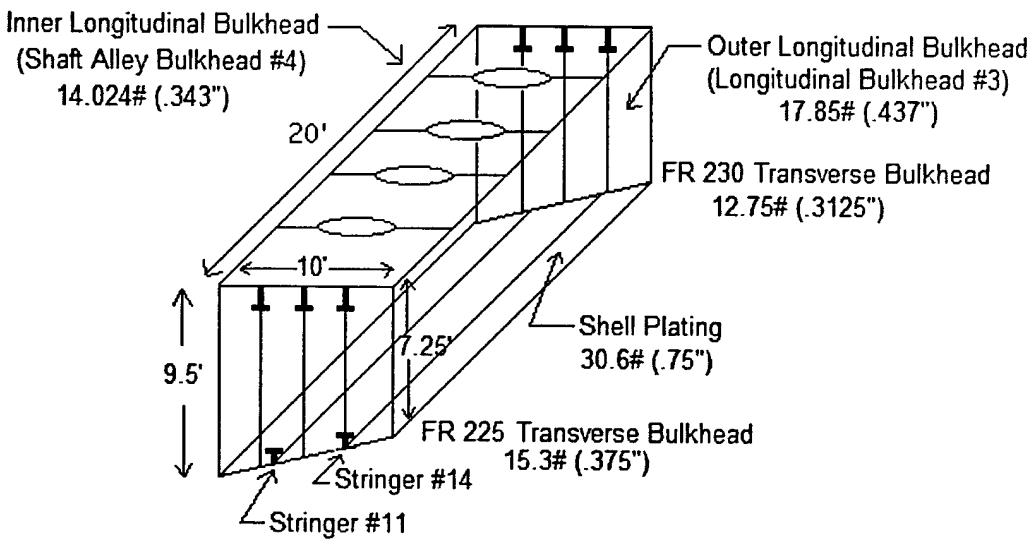

Ship Motion Factors:

$V := 1.25$ Vertical

$A := 0.75$ Athwartship

$F := 0.4$ Fore/Aft

Loading on Inner Longitudinal Bulkhead Plating:

$W_{Perma} = 5.085\times 10^5 lb$ Weight of Perma Ballast®

$F_V := V\cdot W_{Perma}$ $F_V = 6.356\times 10^5 lb$ Vertical Load (Downward)

$F_A := A\cdot W_{Perma}$ $F_A = 3.814\times 10^5 lb$ Athwartship Load (Port)

$F_F := F\cdot W_{Perma}$ $F_F = 2.034\times 10^5 lb$ Fore/Aft Load

$F_N := F_A$ $F_N = 3.814\times 10^5 lb$ Normal Force

Resulting Pressure on Inner Longitudinal Bulkhead Plating:

Compartment Dimensions:

$L := 20ft$ $\quad Ht := 114in$

$Area := L \cdot Ht$ $\quad Area = 190ft^2$

$P := \frac{F_N}{Area}$ $\quad P = 2.007 \times 10^3 \frac{lb}{ft^2}$ $\quad P = 13.939 \frac{lb}{in^2}$

$H := \frac{P}{\rho_{sw}}$ $\quad H = 31.167ft$ $\quad$ Equivalent Head

Design of Plating for Surface Ships, IAW General Specs (Section 100)

$b := 48in$ $\quad a := 114in$ $\quad AR := \frac{b}{a}$ $\quad AR = 0.421$

$t_{actual} := .343in$ Thickness of Plate, HTS

$H = 31.167ft$ Head of Water

$K := 1$ For AR = 0.421, IAW with Table I of the General Specs (Section 100)

$C := 400ft^{.5}$ For HTS, No Set, IAW with Table I of the General Specs (Section 100)

b = short dimension of the panel (inches)
t = thickness of the plate (inches)
C = Coefficient that is a function of the plating material and the location of the plating on the ship

$$\frac{b}{t} \le \frac{C}{K \cdot \sqrt{H}}$$

K = coefficient that depends on the aspect ratio (AR) of the panel

H = Head of salt water (feet)

$$t_{min} := \frac{K \cdot \sqrt{H} \cdot b}{C}$$

$t_{min} = 0.67in$

The 8th deck inner longitudinal bulkhead (Shaft Alley Bulkhead #4) currently has 4 vertical stiffeners spaced 4 ft apart. The minimum thickness calculated for this section of plate to meet Navy Structural Standards with no set is .67 in. The actual plate thickness is .343 in. Therefore, the 8th deck inner longitudinal bulkhead plating must be stiffened.

t_min >> t_actual

Calculations to Determine Strength Corrections:

$t_{min} := .343in$ Thickness of Plate, HTS

$H = 31.167ft$ Head of Water (With new head of water calculated using maximum allowable ballast addition)

$K := 1$ Assume AR remains less than .5

$C := 400ft^{.5}$ For HTS, No Set

$$\frac{b}{t} \le \frac{C}{K \cdot \sqrt{H}}$$

b = short dimension of the panel (inches)
t = thickness of the plate (inches)
C = Coefficient that is a function of the plating material and the location of the plating on the ship
K = coefficient that depends on the aspect ratio (AR) of the panel
H = Head of salt water (feet)

$$b_{limit} := t_{min} \cdot \frac{C}{K \cdot H^{\frac{1}{2}}} \qquad b = 48in \qquad \frac{b}{2} = 24in$$

$b_{limit} = 24.576in$

24.576 in is the maximum distance that stiffeners can be located apart and have no deformation occur to the .343 in plating. The inner longitudinal bulkhead plating currently has 4 vertical stiffeners spaced 4 ft apart. It is recommended that a vertical stiffener be placed in the middle of each existing stiffener on the inner longitudinal bulkhead. Therefore, adding a total of 5 stiffeners to the inner longitudinal bulkhead will put b at approximately 24 in and meet the 24.576 in requirement.

Stress Calculations:

$$\sigma := k \cdot P \cdot \left(\frac{b}{t}\right)^2$$

k = coefficient that depends on the plate edge conditions, aspect ratio (AR) of the panel, and position of point being considered

p = pressure based on limiting ballast add for shell plating calculations

b = panel width
a = panel length
t = plate thickness

$k_{simply_supported} := .75$ $\quad k_{clamped} := .5$ $\quad$ k values are most conservative

$a := 114in$ $\quad b := 24 \cdot in$ $\quad$ based on 24 in separation between stiffeners

$P = 13.939 \frac{lb}{in^2}$ $\quad t := .343in$

$\sigma_{max_allowable} = 40{,}000 \frac{lb}{in^2}$ $\quad$ IAW with the General Specs (Section 100)

$$\sigma_{simply_supported} := k_{simply_supported} \cdot P \cdot \left(\frac{b}{t}\right)^2$$

$$\sigma_{simply_supported} = 51182 \frac{lb}{in^2}$$

$$\sigma_{clamped} := k_{clamped} \cdot P \cdot \left(\frac{b}{t}\right)^2$$

$$\sigma_{clamped} = 34121 \frac{lb}{in^2}$$

Maximum Allowable Stress for HTS is 40,000 psi. By adding vertical stiffeners at 24 in, this stress falls between that of simply supported and that of clamped. Simply supported and clamped structural cases are idealizations of structural member support illustrating zero stiffness and infinite stiffness, neither of which exists in any real-world structural system. On board ship, structural systems can be conveniently approximated by one or the other case, but in fact have stiffness between one or the other. Navy structural analysis is based off clamped ends, therefore the stress falls well below maximum allowable.

$$\sigma_{clamped} < \sigma_{max_allowabl}$$

Structural Analysis for Compartment 8-225-6-V: Outer Longitudinal Bulkhead Plating

Perma Ballast® Data

$\rho_{Perma} := 200\frac{lb}{ft^3}$ Density of Perma Ballast®

$\%_{Perma_fill} := .95$ Based on 95% Fillable Volume

Conversion Factors

$lton := 2240lb$

$\rho_{sw} := 64.4\frac{lb}{ft^3}$ Density of Seawater

Compartment 8-225-6-V

$Volume := 2814ft^3$ Volume of Compartment

$W_{Perma} := 227lton$ Weight of Permanent Ballast

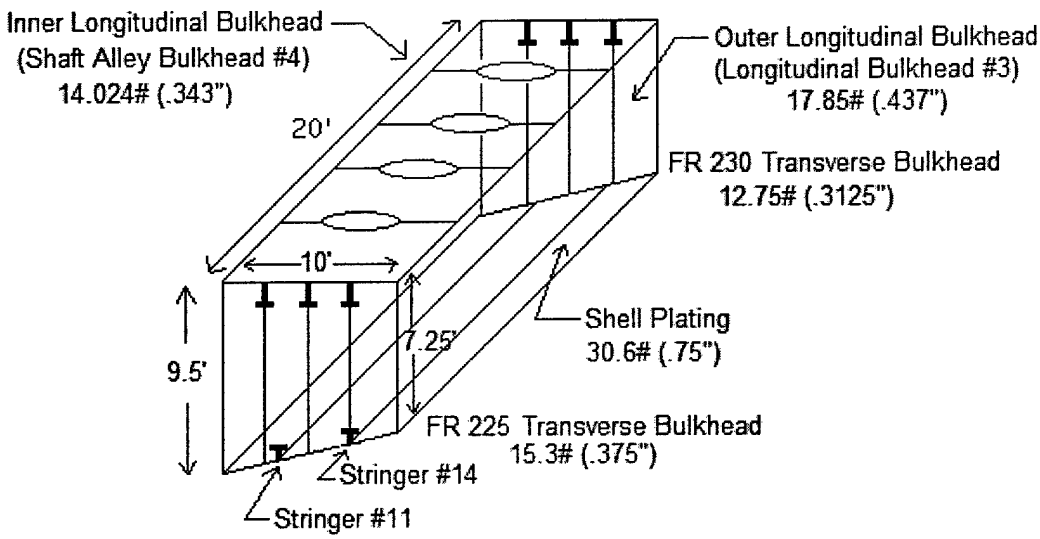

Ship Motion Factors:

$V := 1.25$ Vertical

$A := 0.75$ Athwartship

$F := 0.4$ Fore/Aft

Loading on Outer Longitudinal Bulkhead Plating:

$W_{Perma} = 5.085\times 10^5 lb$ Weight of Perma Ballast®

$F_V := V\cdot W_{Perma}$ $F_V = 6.356\times 10^5 lb$ Vertical Load (Downward)

$F_A := A\cdot W_{Perma}$ $F_A = 3.814\times 10^5 lb$ Athwartship Load (Port)

$F_F := F\cdot W_{Perma}$ $F_F = 2.034\times 10^5 lb$ Fore/Aft Load

$F_N := F_A$ $F_N = 3.814\times 10^5 lb$ Normal Force

Resulting Pressure on Outer Longitudinal Bulkhead Plating:

Compartment Dimensions:

$L := 20ft$ $\quad Ht := 87in$

$Area := L \cdot Ht$ $\quad Area = 145ft^2$

$P := \frac{F_N}{Area}$ $\quad P = 2.63 \times 10^3 \frac{lb}{ft^2}$ $\quad P = 18.264 \frac{lb}{in^2}$

$H := \frac{P}{\rho_{sw}}$ $\quad H = 40.84ft$ $\quad$ Equivalent Head

Design of Plating for Surface Ships, IAW General Specs (Section 100)

$b := 48in$ $\quad a := 87in$ $\quad AR := \frac{b}{a}$ $\quad AR = 0.552$

$t_{actual} := .437in$ Thickness of Plate, HTS

$H = 40.84ft$ Head of Water

$K := .95$ For AR = 0.552, IAW with Table I of the General Specs (Section 100)

$C := 400ft^{.5}$ For HTS, No Set, IAW with Table I of the General Specs (Section 100)

b = short dimension of the panel (inches)
t = thickness of the plate (inches)
C = Coefficient that is a function of the plating material and the location of the plating on the ship

$$\frac{b}{t} \le \frac{C}{K \cdot \sqrt{H}}$$

K = coefficient that depends on the aspect ratio (AR) of the panel

H = Head of salt water (feet)

$$t_{min} := \frac{K \cdot \sqrt{H} \cdot b}{C}$$

$t_{min} = 0.759in$

The minimum thickness calculated for this section of plate to meet Navy Structural Standards with no set is .759 in. The actual plate thickness is .437 in. Therefore, the 8th deck outer longitudinal bulkhead plating must be stiffened.

t_min >> t_actual

Calculations to Determine Strength Corrections:

$t_{min} := .437in$ Thickness of Plate, HTS

$H = 40.84ft$ Head of Water (With new head of water calculated using maximum allowable ballast addition)

$K := .9$ Assume AR remains less than .552

$C := 400ft^{.5}$ For HTS, No Set

$$\frac{b}{t} \le \frac{C}{K \cdot \sqrt{H}}$$

b = short dimension of the panel (inches)
t = thickness of the plate (inches)
C = Coefficient that is a function of the plating material and the location of the plating on the ship
K = coefficient that depends on the aspect ratio (AR) of the panel
H = Head of salt water (feet)

$$b_{limit} := t_{min} \cdot \frac{C}{K \cdot H^{\frac{1}{2}}} \qquad b = 48in \qquad \frac{b}{2} = 24in$$

$b_{limit} = 30.392in$

30.392 in is the maximum distance that stiffeners can be located apart and have no deformation occur to the .437 in plating. The outer longitudinal bulkhead plating currently has 4 vertical stiffeners spaced 4 ft apart. It is recommended that a vertical stiffener be placed in the middle of each existing stiffener on the outer longitudinal bulkhead. Therefore, adding a total of 5 stiffeners to the outer longitudinal bulkhead will put b at approximately 24 in and meet the 30.392 in requirement.

Stress Calculations:

$$\sigma := k \cdot P \cdot \left(\frac{b}{t}\right)^2$$

k = coefficient that depends on the plate edge conditions, aspect ratio (AR) of the panel, and position of point being considered

p = pressure based on limiting ballast add for shell plating calculations

b = panel width
a = panel length
t = plate thickness

$k_{simply_supported} := .75$ $\quad k_{clamped} := .5$ $\quad$ k values are most conservative

$a := 20ft$ $\quad b := 24in$ $\quad$ based on 24 in separation between stiffeners

$P = 18.264 \frac{lb}{in^2}$ $\quad t := .437in$

$\sigma_{max_allowable} = 40,000 \frac{lb}{in^2}$ $\quad$ IAW with the General Specs (Section 100)

$$\sigma_{simply_supported} := k_{simply_supported} \cdot P \cdot \left(\frac{b}{t}\right)^2$$

$$\sigma_{simply_supported} = 41317 \frac{lb}{in^2}$$

$$\sigma_{clamped} := k_{clamped} \cdot P \cdot \left(\frac{b}{t}\right)^2$$

$$\sigma_{clamped} = 27544 \frac{lb}{in^2}$$

Maximum Allowable Stress for HTS is 40,000 psi. By adding vertical stiffeners at 24 in, this stress falls below that of simply supported and that of clamped. Simply supported and clamped structural cases are idealizations of structural member support illustrating zero stiffness and infinite stiffness, neither of which exists in any real-world structural system. On board ship, structural systems can be conveniently approximated by one or the other case, but in fact have stiffness between one or the other. Navy structural analysis is based off clamped ends, therefore the stress falls well below maximum allowable.

$$\sigma_{clamped} << \sigma_{max_allowable}$$

Structural Analysis for Compartment 8-225-6-V: Transverse Bulkhead Frame 225

Perma Ballast® Data

$\rho_{Perma} := 200\frac{lb}{ft^3}$ Density of Perma Ballast®

$\%_{Perma_fill} := .95$ Based on 95% Fillable Volume

Conversion Factors

$lton := 2240lb$

$\rho_{sw} := 64.4\frac{lb}{ft^3}$ Density of Seawater

Compartment 8-225-6-V

$Volume := 2814ft^3$ Volume of Compartment

$W_{Perma} := 227lton$ Weight of Permanent Ballast

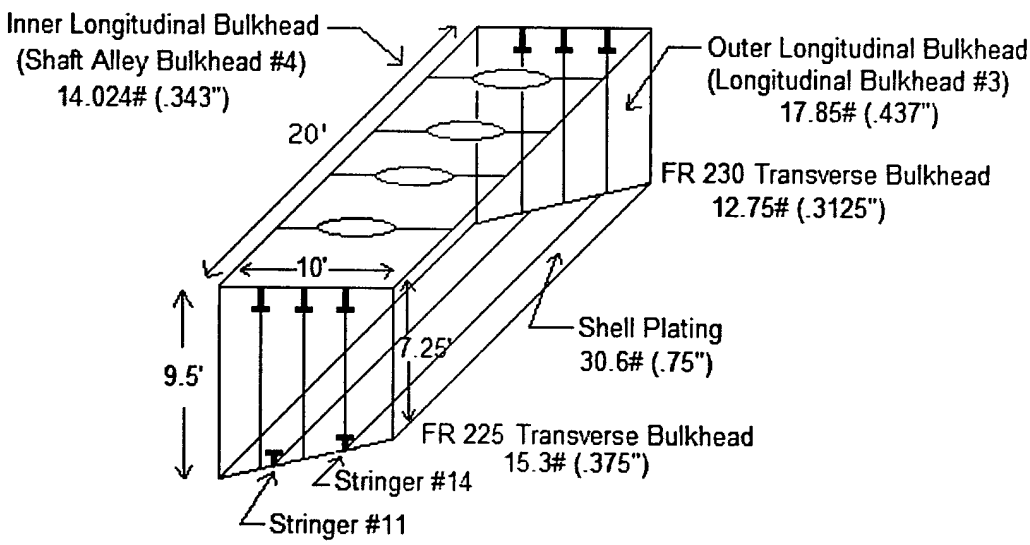

Ship Motion Factors:

$V := 1.25$ Vertical

$A := 0.75$ Athwartship

$F := 0.4$ Fore/Aft

Loading on Transverse Bulkhead Plating:

$W_{Perma} = 5.085\times 10^5 lb$ Weight of Perma Ballast®

$F_V := V\cdot W_{Perma}$ $F_V = 6.356\times 10^5 lb$ Vertical Load (Downward)

$F_A := A\cdot W_{Perma}$ $F_A = 3.814\times 10^5 lb$ Athwartship Load (Port)

$F_F := F\cdot W_{Perma}$ $F_F = 2.034\times 10^5 lb$ Fore/Aft Load

$F_N := F_F$ $F_N = 2.034\times 10^5 lb$ Normal Force

Resulting Pressure on Transverse Bulkhead Plating:

Compartment Dimensions:

$Ht := 114in$ $\quad$ $Width := 120in$ $\quad$ Dimensions of rectangular section

$\beta := asin\left(\frac{114 - 87}{123}\right)$ $\quad$ $\beta = 12.68deg$

$base := 120in$ $\quad$ Dimensions of small triangle

$ht := sin(\beta) \cdot base$ $\quad$ $ht = 26.341in$

$Area := Ht \cdot Width - (.5 \cdot base \cdot ht)$

$Area = 1.21 \times 10^4 in^2$

$P := \frac{F_N}{Area}$ $\quad$ $P = 2.421 \times 10^3 \frac{lb}{ft^2}$ $\quad$ $P = 16.81 \frac{lb}{in^2}$

$H := \frac{P}{\rho_{sw}}$ $\quad$ $H = 37.587ft$ $\quad$ Equivalent Head

Design of Plating for Surface Ships, IAW General Specs (Section 100)

The transverse bulkhead is trapezoidal in shape with 3 vertical stiffeners at Frames 225 and 230 respectively. The transverse bulkhead is evenly divided into 4 rectangular panels so that a cylindrical plate bending analysis can be performed on each panel.

$base := 30in$	Dimensions of small triangle		
$ht = 26.341in$	$ht := \sin(\beta)\cdot base$		
$b := 30in$	$a_A := 114in$	$AR_A := \frac{b}{a_A}$	$AR_A = 0.263$
$a_B := 114in - ht$	$a_B = 107.415in$	$AR_B := \frac{b}{a_B}$	$AR_B = 0.279$
$a_C := a_B - ht$	$a_C = 100.829in$	$AR_C := \frac{b}{a_C}$	$AR_C = 0.298$
$a_D := a_C - ht$	$a_D = 94.244in$	$AR_D := \frac{b}{a_D}$	$AR_D = 0.318$
$t_{actual} := .375in$	Thickness of Plate, HTS		
$H = 37.587ft$	Head of Water		
$K := 1$	For AR < 0.5, IAW with Table I of the General Specs (Section 100)		
$C := 400ft^{.5}$	For HTS, No Set, IAW with Table I of the General Specs (Section 100)		

$$\frac{b}{t} \le \frac{C}{K\cdot\sqrt{H}}$$

b = short dimension of the panel (inches)
t = thickness of the plate (inches)
C = Coefficient that is a function of the plating material and the location of the plating on the ship
K = coefficient that depends on the aspect ratio (AR) of the panel
H = Head of salt water (feet)

$$t_{min} := \frac{K\cdot\sqrt{H}\cdot b}{C}$$

$t_{min} = 0.46in$

The minimum thickness calculated for this section of plate to meet Navy Structural Standards with no set is .46 in. The actual plate thickness is .375 in. Therefore, the 8th deck transverse plating at Frame 225 must be stiffened.

t_min >> t_actual

Calculations to Determine Strength Corrections:

$t_{min} := .375in$ Thickness of Plate, HTS

$H = 37.587ft$ Head of Water (With new head of water calculated using maximum allowable ballast addition)

$K := 1$ Assume AR remains less than .5

$C := 400ft^{.5}$ For HTS, No Set

$$\frac{b}{t} \le \frac{C}{K \cdot \sqrt{H}}$$

b = short dimension of the panel (inches)
t = thickness of the plate (inches)
C = Coefficient that is a function of the plating material and the location of the plating on the ship
K = coefficient that depends on the aspect ratio (AR) of the panel
H = Head of salt water (feet)

$$b_{limit} := t_{min} \cdot \frac{C}{K \cdot H^{\frac{1}{2}}} \qquad b = 30in \qquad \frac{b}{2} = 15in$$

$b_{limit} = 24.466in$

24.466 in is the maximum distance that vertical stiffeners can be located apart and have no deformation occur to the .375 in plating. The transverse bulkhead plating has 3 vertical stiffeners It is recommended that a stiffener be placed between these existing vertical stiffeners. Therefore, adding 4 stiffeners to the transverse bulkhead plating will put b at approximately 15 in and meet the 24.466 in requirement.

Stress Calculations:

$\sigma := k \cdot P \cdot \left(\frac{b}{t}\right)^2$

k = coefficient that depends on the plate edge conditions, aspect ratio (AR) of the panel, and position of point being considered

p = pressure based on limiting ballast add for shell plating calculations

b = panel width
a = panel length
t = plate thickness

$k_{simply_supported} := .75$ $\quad k_{clamped} := .5$ $\quad$ k values are most conservative

$a := 114in$ $\quad b := 15 \cdot in$ $\quad$ based on 15 in separation between stiffeners

$P = 16.81 \frac{lb}{in^2}$ $\quad t := .375in$

$\sigma_{max_allowable} = 40{,}000 \frac{lb}{in^2}$ $\quad$ IAW with the General Specs (Section 100)

$\sigma_{simply_supported} := k_{simply_supported} \cdot P \cdot \left(\frac{b}{t}\right)^2$

$\sigma_{simply_supported} = 20172 \frac{lb}{in^2}$

$\sigma_{clamped} := k_{clamped} \cdot P \cdot \left(\frac{b}{t}\right)^2$

$\sigma_{clamped} = 13448 \frac{lb}{in^2}$

Maximum Allowable Stress for HTS is 40,000 psi. By adding stiffeners at 15 in, this stress falls below that of simply supported and that of clamped. Simply supported and clamped structural cases are idealizations of structural member support illustrating zero stiffness and infinite stiffness, neither of which exists in any real-world structural system. On board ship, structural systems can be conveniently approximated by one or the other case, but in fact have stiffness between one or the other. Navy structural analysis is based off clamped ends, therefore the stress falls well below maximum allowable.

$\sigma_{clamped} << \sigma_{max_allowable}$

Structural Analysis for Compartment 8-225-6-V: Transverse Bulkhead Frame 230

Perma Ballast® Data

$\rho_{Perma} := 200\frac{lb}{ft^3}$ Density of Perma Ballast®

$\%_{Perma_fill} := .95$ Based on 95% Fillable Volume

Conversion Factors

$lton := 2240lb$

$\rho_{sw} := 64.4\frac{lb}{ft^3}$ Density of Seawater

Compartment 8-225-6-V

$Volume := 2814ft^3$ Volume of Compartment

$W_{Perma} := 227lton$ Weight of Permanent Ballast

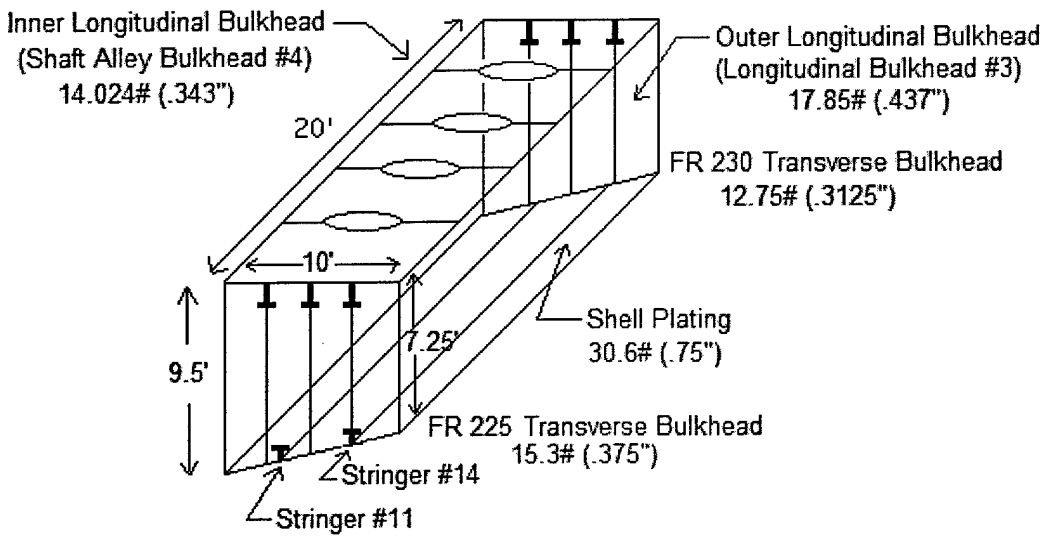

Ship Motion Factors:

$V := 1.25$ Vertical

$A := 0.75$ Athwartship

$F := 0.4$ Fore/Aft

Loading on Transverse Bulkhead Plating:

$W_{Perma} = 5.085\times 10^5 lb$ Weight of Perma Ballast®

$F_V := V\cdot W_{Perma}$	$F_V = 6.356\times 10^5 lb$	Vertical Load (Downward)
$F_A := A\cdot W_{Perma}$	$F_A = 3.814\times 10^5 lb$	Athwartship Load (Port)
$F_F := F\cdot W_{Perma}$	$F_F = 2.034\times 10^5 lb$	Fore/Aft Load
$F_N := F_F$	$F_N = 2.034\times 10^5 lb$	Normal Force

Resulting Pressure on Transverse Bulkhead Plating:

Compartment Dimensions:

$Ht := 114in$ Dimensions of rectangular section

$Width := 120in$

$\beta := asin\left(\frac{114 - 87}{123}\right)$ $\beta = 12.68deg$

$base := 120in$ Dimensions of small triangle

$ht := sin(\beta) \cdot base$ $ht = 26.341in$

$Area := Ht \cdot Width - (.5 \cdot base \cdot ht)$

$Area = 1.21 \times 10^4 in^2$

$P := \frac{F_N}{Area}$ $P = 2.421 \times 10^3 \frac{lb}{ft^2}$ $P = 16.81 \frac{lb}{in^2}$

$H := \frac{P}{\rho_{sw}}$ $H = 37.587ft$ Equivalent Head

Design of Plating for Surface Ships, IAW General Specs (Section 100)

The transverse bulkhead is trapezoidal in shape with 3 vertical stiffeners at Frames 225 and 230 respectively. The transverse bulkhead is evenly divided into 4 rectangular panels so that a cylindrical plate bending analysis can be performed on each panel.

$base := 30in$ Dimensions of small triangle

$ht = 26.341in$ $ht := \sin(\beta) \cdot base$

$b := 30in$	$a_A := 114in$	$AR_A := \frac{b}{a_A}$	$AR_A = 0.263$
$a_B := 114in - ht$	$a_B = 107.415in$	$AR_B := \frac{b}{a_B}$	$AR_B = 0.279$
$a_C := a_B - ht$	$a_C = 100.829in$	$AR_C := \frac{b}{a_C}$	$AR_C = 0.298$
$a_D := a_C - ht$	$a_D = 94.244in$	$AR_D := \frac{b}{a_D}$	$AR_D = 0.318$

$t_{actual} := .3125in$ Thickness of Plate, HTS

$H = 37.587ft$ Head of Water

$K := 1$ For AR < 0.5, IAW with Table I of the General Specs (Section 100)

$C := 400ft^{.5}$ For HTS, No Set, IAW with Table I of the General Specs (Section 100)

$$\frac{b}{t} \le \frac{C}{K \cdot \sqrt{H}}$$

b = short dimension of the panel (inches)
t = thickness of the plate (inches)
C = Coefficient that is a function of the plating material and the location of the plating on the ship
K = coefficient that depends on the aspect ratio (AR) of the panel
H = Head of salt water (feet)

$$t_{min} := \frac{K \cdot \sqrt{H} \cdot b}{C}$$

$t_{min} = 0.46in$

The minimum thickness calculated for this section of plate to meet Navy Structural Standards with no set is .46 in. The actual plate thickness is .3125 in. Therefore, the 8th deck transverse plating at Frame 230 must be stiffened.

t_min >> t_actual

Calculations to Determine Strength Corrections:

$t_{min} := .3125in$ Thickness of Plate, HTS

$H = 37.587ft$ Head of Water (With new head of water calculated using maximum allowable ballast addition)

$K := 1$ Assume AR remains less than .5

$C := 400ft^{.5}$ For HTS, No Set

$$\frac{b}{t} \le \frac{C}{K \cdot \sqrt{H}}$$

b = short dimension of the panel (inches)
t = thickness of the plate (inches)
C = Coefficient that is a function of the plating material and the location of the plating on the ship
K = coefficient that depends on the aspect ratio (AR) of the panel
H = Head of salt water (feet)

$$b_{limit} := t_{min} \cdot \frac{C}{K \cdot H^{\frac{1}{2}}} \qquad b = 30in \qquad \frac{b}{2} = 15in$$

$b_{limit} = 20.389in$

20.389 in is the maximum distance that vertical stiffeners can be located apart and have no deformation occur to the .3125 in plating. The transverse bulkhead plating has 3 vertical stiffeners It is recommended that a stiffener be placed between these existing vertical stiffeners. Therefore, adding 4 stiffeners to the transverse bulkhead plating will put b at approximately 15 in and meet the 20.389 in requirement.

Stress Calculations:

$$\sigma := k \cdot P \cdot \left(\frac{b}{t}\right)^2$$

k = coefficient that depends on the plate edge conditions, aspect ratio (AR) of the panel, and position of point being considered

p = pressure based on limiting ballast add for shell plating calculations

b = panel width
a = panel length
t = plate thickness

$k_{simply_supported} := .75$ $\quad k_{clamped} := .5$ $\quad$ k values are most conservative

$a := 114in$ $\quad b := 15 \cdot in$ $\quad$ based on 15 in separation between stiffeners

$P = 16.81 \frac{lb}{in^2}$ $\quad t := .3125in$

$\sigma_{max_allowable} = 40{,}000 \frac{lb}{in^2}$ $\quad$ IAW with the General Specs (Section 100)

$$\sigma_{simply_supported} := k_{simply_supported} \cdot P \cdot \left(\frac{b}{t}\right)^2$$

$$\sigma_{simply_supported} = 29048 \frac{lb}{in^2}$$

$$\sigma_{clamped} := k_{clamped} \cdot P \cdot \left(\frac{b}{t}\right)^2$$

$$\sigma_{clamped} = 19365 \frac{lb}{in^2}$$

Maximum Allowable Stress for HTS is 40,000 psi. By adding stiffeners at 15 in, this stress falls below that of simply supported and that of clamped. Simply supported and clamped structural cases are idealizations of structural member support illustrating zero stiffness and infinite stiffness, neither of which exists in any real-world structural system. On board ship, structural systems can be conveniently approximated by one or the other case, but in fact have stiffness between one or the other. Navy structural analysis is based off clamped ends, therefore the stress falls well below maximum allowable.

$$\sigma_{clamped} << \sigma_{max_allowable}$$

Appendix F: Final POSSE Modeling Results

Tanks		Capacity (200 lbs/ft³)		Degrees																							
				0.5				1				1.5				2				2.5				3			
	Volume (ft³)	Density (LT/ft³)	Weight (LT)	Weight (LT)	Percent (%)	Δ KG	Δ Trim	Weight (LT)	Percent (%)	Δ KG	Δ Trim	Weight (LT)	Percent (%)	Δ KG	Δ Trim	Weight (LT)	Percent (%)	Δ KG	Δ Trim	Weight (LT)	Percent (%)	Δ KG	Δ Trim	Weight (LT)	Percent (%)	Δ KG	Δ Trim
2nd Deck																											
2-165-8-V	3,969	0.0893	354	124	35			262	74			280	79			280	79			280	79			280	79		
2-180-6-V	6,273	0.0893	560									123	22			263	47			403	72			448	80		
2-250-4-V	3,362	0.0893	300																					111	37		
Total (LT)				124	10.2	0.02	.07A	262	21.6	0.04	.15A	403	33.2	0.05	.28A	543	44.7	0.07	.41A	683	56.2	0.09	.55A	839	69.1	0.11	.85A
Number of Tanks				1 Tank				1 Tank				2 Tanks				2 Tanks				2 Tanks				3 Tanks			
8th Deck																											
8-210-10-V	1,716	0.0893	153					138	90			138	90			138	90			138	90			138	90		
8-215-8-V	1,238	0.0893	111					99	90			99	90			99	90			99	90			99	90		
8-215-10-V	1,187	0.0893	106	95	90			95	90			95	90			95	90			95	90			95	90		
8-220-8-V	1,019	0.0893	91	82	90							82	90			82	90			82	90			82	90		
8-220-10-V	737	0.0893	66									59	90			59	90			59	90			59	90		
8-225-6-V	2,814	0.0893	251													226	90							226	90		
8-225-8-V	1,145	0.0893	102									92	90							92	90			92	90		
8-230-4-V	2,096	0.0893	187													168	90			168	90			168	90		
8-230-6-V	646	0.0893	58					52	90											52	90			52	90		
8-235-6-V	1,491	0.0893	133																	120	90			120	90		
8-235-8-V	2,073	0.0893	185																	167	90			167	90		
Total (LT)				177	12.3	-0.02	.27A	384	26.7	-0.05	.58A	565	39.2	-0.08	0.87A	867	60.2	-0.13	1.41A	1072	74.3	-0.14	1.82A	1298	90	-0.17	2.21A
Number of Tanks				2 Tanks				4 Tanks				6 Tanks				7 Tanks				10 Tanks				11 Tanks			

Appendix G: Final Cost Estimation Data and Worksheets

Provided by Norfolk Naval Shipyard Structural Engineering and Planning Office (Code 256)

PERMA BALLAST® INSTALLATION

ESTIMATORS NAME BACK DATE NOV 2003

ESTIMATE SHEET

(This work sheet was created for the final costing estimation due to the lesser lton addition for each 2nd deck void, thus requiring compartment 2-250-4-V to be utilized)

PC NO.	WORK TO BE ACCOMPLISHED	11 S1	11 S2	11 S6	74 YY	11 S5	24 J1	17 SC	26 W1	35 GA	38 YY	51 E1	56 P1	64 A1	64 A6	71 AA	72 R1	99 TS	75K A
	STIFFENING FOR 2-250-4-V																		
	OPEN & CLOSE VOID					**10**	**4**												
	CUT/INST ACCESSES FOR STIFFENING	**96**							**112**										
	4 LOCATIONS																		
	INST SUPPORT STR	**198**							**257**								**24**	**48**	
	CUT/INST ACCESSES (6) 12" FOR FILLING	**48**							**56**										
	TEST ACCESSES					**32**													
	PREPARE AND PAINT STRUCT														**384**	**256**			
	TOTALS:	**342**				**42**	**4**		**425**						**384**	**256**	**24**	**48**	**211**
	TOTAL 1736 MH'S TOTAL 217 MD'S																		
	TOTAL PROD $139,216																		
	MATERIAL: $9,371																		
	ADD'L WEIGHT: 4,470 #'S																		

MATERIAL WORK SHEET

PERMA BALLAST® INSTALLATION

(This work sheet was created for the final costing estimation due to the lesser lton addition for each 2nd deck void, thus requiring compartment 2-250-4-V to be utilized)

SHOP	PC #	MATERIAL	STOCK NO.	QTY	SS/PUR	COST
		SPONSON STIFFENING: 2-250-4-V				
11S1	003	5" X 4" ANGLE (7.5#LF)	9520-00-277-5978	225	$6.46/FT	$1,454
71AA	004	PAINT				$1,200
74YY	N/A	BLAST AND PAINT FACILITY				$4,500
ALL	N/A	CONSUMABLES				$2,217
		TOTAL MATERIAL COSTS:				$9,371
		TOTAL MATERIAL WEIGHT:				4,470 #'S

MATERIAL WORK SHEET

PERMA BALLAST® INSTALLATION

(This work sheet was created for the final costing estimation due to the stiffening required for the 8th deck and is not reflected on the previous estimate page)

SHOP	PC #	MATERIAL	STOCK NO.	QTY	SS/PUR	COST
		BHD STIFFENING: 8th DECK				
11S1	001	5" X 4" ANGLE (7.5#LF)	9520-00-277-5978	120	$6.46/FT	$775
71AA	002	PAINT				$1,000
74YY	N/A	BLAST AND PAINT FACILITY				$2,400
ALL	N/A	CONSUMABLES				$250
		TOTAL MATERIAL COSTS:				$4,425
		TOTAL MATERIAL WEIGHT:				900 #'S

PERMA BALLAST® INSTALLATION

OPTION 1
(2ND DECK VOIDS 0.5° LIST)

TANK	LIST	PERCENT	TYPE	PROD $	MAT $	MAT #
2-165-8-V	0.5°	35%	200LBS/FT³	$115,046	$7,744	3,695 #'S
2-180-6-V	0.5°					
2-250-4-V	0.5°					
TOTALS				$115,046	$7,744	3,695 #'S

PERMA BALLAST® INSTALLATION

OPTION 2
(8TH DECK VOIDS 0.5° LIST)

TANK	LIST	PERCENT	TYPE	PROD $	MAT $	MAT #
8-210-10-V	0.5°					
8-215-8-V	0.5°					
8-215-10-V	0.5°	90%	200LBS/FT³	$21,186	$4,425	900 #'S
8-220-8-V	0.5°	90%	200LBS/FT³	$21,186	$4,425	900 #'S
8-220-10-V	0.5°					
8-225-6-V	0.5°					
8-225-8-V	0.5°					
8-230-4-V	0.5°					
8-230-6-V	0.5°					
8-235-6-V	0.5°					
8-235-8-V	0.5°					
TOTALS				$42,372	$8,850	1,800 #'S

PERMA BALLAST® INSTALLATION

OPTION 3
(2ND DECK VOIDS 1.0° LIST)

TANK	LIST	PERCENT	TYPE	PROD $	MAT $	MAT #
2-165-8-V	1.0°	74%	200LBS/FT³	$243,240	$16,373	7,811 #'S
2-180-6-V	1.0°					
2-250-4-V	1.0°					
TOTALS				$243,240	$16,373	7,811 #'S

PERMA BALLAST® INSTALLATION

OPTION 4
(8TH DECK TANKS 1.0° LIST)

TANK	LIST	PERCENT	TYPE	PROD $	MAT $	MAT #
8-210-10-V	1.0°	90%	200LBS/FT³	$21,186	$4,425	900 #'S
8-215-8-V	1.0°	90%	200LBS/FT³	$21,186	$4,425	900 #'S
8-215-10-V	1.0°	90%	200LBS/FT³	$21,186	$4,425	900 #'S
8-220-8-V	1.0°					
8-220-10-V	1.0°					
8-225-6-V	1.0°					
8-225-8-V	1.0°					
8-230-4-V	1.0°					
8-230-6-V	1.0°	90%	200LBS/FT³	$21,186	$4,425	900 #'S
8-235-6-V	1.0°					
8-235-8-V	1.0°					
TOTALS				$84,744	$17,700	3,600 #'S

PERMA BALLAST® INSTALLATION

OPTION 5
(2ND DECK VOIDS 1.5° LIST)

TANK	LIST	PERCENT	TYPE	PROD $	MAT $	MAT #
2-165-8-V	1.5°	79%	200LBS/FT³	$164,352	$11,063	5,278 #'S
2-180-6-V	1.5°	22%	200LBS/FT³	$115,710	$7,788	3,715 #'S
2-250-4-V	1.5°					
TOTALS				$280,062	$18,851	8,993 #'S

PERMA BALLAST® INSTALLATION

OPTION 6
(8TH DECK TANKS 1.5° LIST)

TANK	LIST	PERCENT	TYPE	PROD $	MAT $	MAT #
8-210-10-V	1.5°	90%	200LBS/FT³	$21,186	$4,425	900 #'S
8-215-8-V	1.5°	90%	200LBS/FT³	$21,186	$4,425	900 #'S
8-215-10-V	1.5°	90%	200LBS/FT³	$21,186	$4,425	900 #'S
8-220-8-V	1.5°	90%	200LBS/FT³	$21,186	$4,425	900 #'S
8-220-10-V	1.5°	90%	200LBS/FT³	$21,186	$4,425	900 #'S
8-225-6-V	1.5°					
8-225-8-V	1.5°	90%	200LBS/FT³	$21,186	$4,425	900 #'S
8-230-4-V	1.5°					
8-230-6-V	1.5°					
8-235-6-V	1.5°					
8-235-8-V	1.5°					
TOTALS				$127,116	$26,550	5,400 #'S

PERMA BALLAST® INSTALLATION

OPTION 7
(2ND DECK VOIDS 2.0° LIST)

TANK	LIST	PERCENT	TYPE	PROD $	MAT $	MAT #
2-165-8-V	2.0°	79%	200LBS/FT³	$164,352	$11,063	5,278 #'S
2-180-6-V	2.0°	47%	200LBS/FT³	$247,200	$16,638	7,938 #'S
2-250-4-V	2.0°					
TOTALS				$411,552	$27,701	13,216 #'S

PERMA BALLAST® INSTALLATION

OPTION 8
(8TH DECK TANKS 2.0° LIST)

TANK	LIST	PERCENT	TYPE	PROD $	MAT $	MAT #
8-210-10-V	2.0°	90%	200LBS/FT³	$21,186	$4,425	900 #'S
8-215-8-V	2.0°	90%	200LBS/FT³	$21,186	$4,425	900 #'S
8-215-10-V	2.0°	90%	200LBS/FT³	$21,186	$4,425	900 #'S
8-220-8-V	2.0°	90%	200LBS/FT³	$21,186	$4,425	900 #'S
8-220-10-V	2.0°	90%	200LBS/FT³	$21,186	$4,425	900 #'S
8-225-6-V	2.0°	90%	200LBS/FT³	$21,186	$4,425	900 #'S
8-225-8-V	2.0°					
8-230-4-V	2.0°	90%	200LBS/FT³	$21,186	$4,425	900 #'S
8-230-6-V	2.0°					
8-235-6-V	2.0°					
8-235-8-V	2.0°					
TOTALS				$148,302	$30,975	6,300 #'S

PERMA BALLAST® INSTALLATION

OPTION 9
(2ND DECK VOIDS 2.5° LIST)

TANK	LIST	PERCENT	TYPE	PROD $	MAT $	MAT #
2-165-8-V	2.5°	79%	200LBS/FT³	$164,352	$11,063	5,278 #'S
2-180-6-V	2.5°	72%	200LBS/FT³	$262,979	$17,701	8,445 #'S
2-250-4-V	2.5°					
TOTALS				$427,331	$28,764	13,723 #'S

PERMA BALLAST® INSTALLATION

OPTION 10
(8TH DECK TANKS 2.5° LIST)

TANK	LIST	PERCENT	TYPE	PROD $	MAT $	MAT #
8-210-10-V	2.5°	90%	200LBS/FT³	$21,186	$4,425	900 #'S
8-215-8-V	2.5°	90%	200LBS/FT³	$21,186	$4,425	900 #'S
8-215-10-V	2.5°	90%	200LBS/FT³	$21,186	$4,425	900 #'S
8-220-8-V	2.5°	90%	200LBS/FT³	$21,186	$4,425	900 #'S
8-220-10-V	2.5°	90%	200LBS/FT³	$21,186	$4,425	900 #'S
8-225-6-V	2.5°					
8-225-8-V	2.5°	90%	200LBS/FT³	$21,186	$4,425	900 #'S
8-230-4-V	2.5°	90%	200LBS/FT³	$21,186	$4,425	900 #'S
8-230-6-V	2.5°	90%	200LBS/FT³	$21,186	$4,425	900 #'S
8-235-6-V	2.5°	90%	200LBS/FT³	$21,186	$4,425	900 #'S
8-235-8-V	2.5°	90%	200LBS/FT³	$21,186	$4,425	900 #'S
TOTALS				$211,860	$44,250	9,000 #'S

PERMA BALLAST® INSTALLATION

OPTION 11
(2ND DECK VOIDS 3.0° LIST)

TANK	LIST	PERCENT	TYPE	PROD $	MAT $	MAT #
2-165-8-V	3.0°	79%	200LBS/FT³	$164,352	$11,063	5,278 #'S
2-180-6-V	3.0°	80%	200LBS/FT³	$262,979	$17,701	8,445 #'S
2-250-4-V	3.0°	37%	200LBS/FT³	$51,509	$3,467	1,654 #'S
TOTALS				$478,840	$32,231	15,377 #'S

PERMA BALLAST® INSTALLATION

OPTION 12
(8TH DECK VOIDS 3.0° LIST)

TANK	LIST	PERCENT	TYPE	PROD $	MAT $	MAT #
8-210-10-V	3.0°	90%	200LBS/FT³	$21,186	$4,425	900 #'S
8-215-8-V	3.0°	90%	200LBS/FT³	$21,186	$4,425	900 #'S
8-215-10-V	3.0°	90%	200LBS/FT³	$21,186	$4,425	900 #'S
8-220-8-V	3.0°	90%	200LBS/FT³	$21,186	$4,425	900 #'S
8-220-10-V	3.0°	90%	200LBS/FT³	$21,186	$4,425	900 #'S
8-225-6-V	3.0°	90%	200LBS/FT³	$21,186	$4,425	900 #'S
8-225-8-V	3.0°	90%	200LBS/FT³	$21,186	$4,425	900 #'S
8-230-4-V	3.0°	90%	200LBS/FT³	$21,186	$4,425	900 #'S
8-230-6-V	3.0°	90%	200LBS/FT³	$21,186	$4,425	900 #'S
8-235-6-V	3.0°	90%	200LBS/FT³	$21,186	$4,425	900 #'S
8-235-8-V	3.0°	90%	200LBS/FT³	$21,186	$4,425	900 #'S
TOTALS				$233,046	$48,675	9,900 #'S