ARMY RESEARCH LABORATORY

The Mechanical and Ballistic Properties of an Electron Beam Single Melt of Ti-6Al-4V Plate

by Matthew Burkins, Martin Wells, John Fanning,
and Brijmohan Roopchand

ARL-MR-515 May 2001

Approved for public release; distribution is unlimited.

20010613 031

The findings in this report are not to be construed as an official Department of the Army position unless so designated by other authorized documents.

Citation of manufacturer's or trade names does not constitute an official endorsement or approval of the use thereof.

Destroy this report when it is no longer needed. Do not return it to the originator.

Army Research Laboratory
Aberdeen Proving Ground, MD 21005-5066

ARL-MR-515 **May 2001**

The Mechanical and Ballistic Properties of an Electron Beam Single Melt of Ti-6Al-4V Plate

Matthew Burkins and Martin Wells
Weapons and Materials Research Directorate, ARL

John Fanning
TIMET Henderson Technical Laboratory

Brijmohan Roopchand
U.S. Army Armament Research, Development, and Engineering Center

Approved for public release; distribution is unlimited.

Abstract

Titanium alloys are beginning to be used in Army ground systems as a result of their unique combination of ballistic and mechanical properties. However, more widespread use has been limited by cost of both the initial plate product and fabrication. Ti-6Al-4V is the current alloy of choice for structural and appliqué armor for Army applications. Until now, virtually all of the production of this alloy has been for aircraft/aerospace applications. These products all require at least two vacuum arc melts, and for flight critical parts and all rotating components in gas turbine engines, a third melt is required. During the past several years, cold hearth melting has been used for one of the melts because this process can remove inclusions. However, while single melts of commercially pure (unalloyed) titanium for industrial uses are now being routinely produced by electron beam, cold hearth melting, there is little production of titanium alloys.

The object of this study was to evaluate an electron beam, cold hearth, single melt of Ti-6Al-4V plate for application to Army ground vehicles. Single-hearth melting would considerably reduce the cost of titanium alloy plate (and other mill products) through the use of lower cost raw materials and reduced energy consumption. The plates produced by the electron beam, cold hearth, single-melt process were ballistically equivalent to standard production Ti-6Al-4V material.

Table of Contents

		Page
	List of Figures	v
	List of Tables	vii
1.	**Introduction**	1
2.	**Materials and Procedures**	1
2.1	Electron Beam Cold Hearth Melting (EBCHM)	1
2.2	Details of the EBCHM Ingot	3
3.	**Results and Discussion**	6
3.1	Tensile Properties	6
3.2	Fracture Toughness	8
3.3	Fatigue	8
3.4	Ballistic Properties	9
4.	**Potential Applications**	14
5.	**Recommendations and Future Work**	14
6.	**Summary and Conclusions**	15
7.	**References**	17
	Appendix A: Chemical Analysis and Tensile Testing Data	19
	Appendix B: Ballistic Test Data	23
	List of Abbreviations	31
	Distribution List	33
	Report Documentation Page	43

INTENTIONALLY LEFT BLANK.

List of Figures

Figure		Page
1.	Schematic of the Hearth Arrangement at Titanium Hearth Technologies	2
2.	Chemical Composition of Single-Melt Ti-6Al-4V Ingot Produced by EBCHM	5
3.	Longitudinal Photomicrograph of a 64-mm (2.5-in) Ti-6Al-4V Plate, THT Heat AR7006	7
4.	Fracture Toughness (K_{Ic}) of 64-mm (2.5-in) Plate	8
5.	High-Cycle Fatigue Data for Smooth (Unnotched) Specimens ($K_t = 1.0$)	9
6.	Projectiles used in Ballistic Evaluation	10
7.	Photographs of 38-mm (1.5-in) EBCHM Plate After Ballistic Testing	11
8.	Photographs of 64-mm (2.5-in) EBCHM Plate After Ballistic Testing	12
9.	Close-Up Photographs of Impact Locations on the 25-mm (0.97-in) EBCHM Plate	13

INTENTIONALLY LEFT BLANK.

List of Tables

Table		Page
1.	Advantages/Disadvantages of Electron Beam vs. Plasma Arc	3
2.	Chemical Composition of the Ingot in Weight Percent	4
3.	Composition Ranges in Weight Percent	4
4.	Tensile Properties of the Three Plate Thicknesses in the Longitudinal and Transverse Directions	7
5.	Ballistic Properties of EBCHM Ti-6Al-4V Plate and Other Sources	10
A-1.	Chemical Analysis for Standard-Processed Ti-6Al-4V Plates	21
A-2.	Average Tensile Testing Data for Standard-Processed Ti-6Al-4V Plates	21

INTENTIONALLY LEFT BLANK.

1. Introduction

Titanium alloys are beginning to be used in Army ground systems because of their unique combination of ballistic and mechanical properties [1, 2]. However, more widespread use has been limited by the cost of both the initial plate product and fabrication. Ti-6Al-4V is the current alloy of choice for structural and appliqué armor for U.S. Army applications. Until now, virtually all of the production of this alloy has been for aircraft/aerospace applications. These products require at least two vacuum arc melts; for flight-critical parts and all rotating components in gas turbine engines, a third melt is required. Over the past several years, cold hearth melting has been used for one of the melts because the process can remove inclusions [3]. Even though single melts of commercially pure (unalloyed) titanium are now being routinely produced by electron-beam, cold hearth melting, there is little production of titanium alloys.

This study evaluated an electron beam, cold hearth, single melt of Ti-6Al-4V plate for application to Army ground vehicles. Single-hearth melting would considerably reduce the cost of titanium alloy plate (and other mill products) through lower-cost raw materials and reduced energy consumption.

2. Materials and Procedures

2.1 Electron Beam Cold Hearth Melting (EBCHM). There are two basic types of cold hearth melting for reactive and refractory metals—electron beam and plasma arc (PAM). Both are quite similar, but differ in the heat source. In both processes, the feed stock is first melted by electron beam or plasma arc into a water-cooled copper hearth. The molten metal then passes into a refining section. Finally, it passes over a small lip or weir and into an ingot mold where solidification occurs. An EBCHM furnace is shown schematically in Figure 1. In the bath, the metal is kept molten by surface heating with additional electron beam guns in the case of EBCHM, or plasma torches for PAM. Solidification takes place in a water-cooled copper mold, and the resulting ingot is continuously withdrawn into a pit.

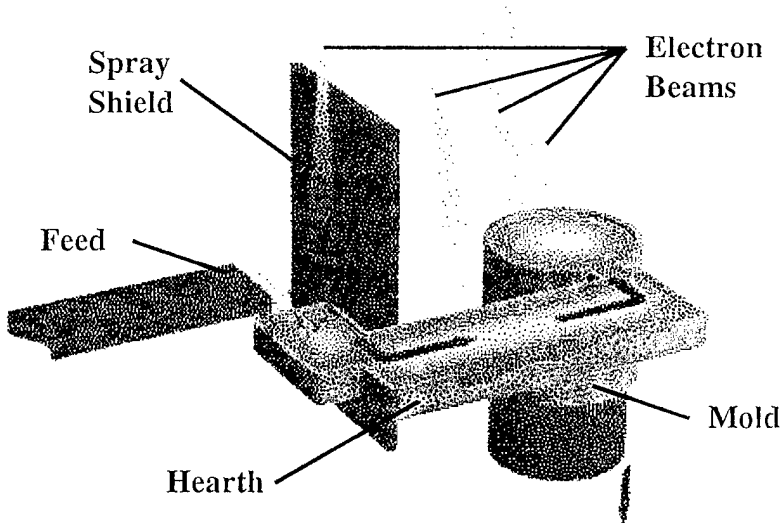

Figure 1. Schematic of the Hearth Arrangement at Titanium Hearth Technologies.

The molten metal is in contact with a protective solidified metal shell, or "skull," a few inches thick, that in turn is in contact with the copper hearth. The composition of the skull is the same as that of the alloy being melted. Any high-density inclusions, such as tungsten carbide particles, will deposit into the skull during processing. The skull may be removed from the furnace if a change of alloy is required, and then replaced when the same composition gets melted again. Both processes use a wide variety of raw materials, including machining chips, revert scrap/croppings from rolling, forging and other primary processes, and sponge combined with master alloy. This report, however, will limit discussion to the EBCHM processing route.

In the electron beam process, melting is done under a vacuum of 10^{-5} Torr or better. Elements with a high vapor pressure (such as aluminum) evaporate in the vacuum environment of the EB melt chamber, and additions (of aluminum shot) are necessary to compensate for this loss.

There are now two companies with EBCHM capability for ingot sizes up to 22,727 kg (50,000 lb). Ingot length (and thus weight) is governed by the depth of the pit beneath the ingot mold. Both round and rectangular ingots may be produced. A common ingot size in

commercially pure (CP or unalloyed titanium) grades is 0.66 m × 1.32 m × 4.06+ m (26 in × 52 in × 160+ in) weighing 15,909 kg (35,000 lb). These furnaces are capable of melting up to about 3,636 kg (8,000 lb)/hr for CP grades and perhaps 2,273 kg (5,000 lb)/hr for alloy grades.

Table 1 shows some advantages and disadvantages of EBCHM and PAM as they relate to U.S. Army applications for Ti-6Al-4V in ground systems. Both processes cost less than the double-melt or triple-melt operations currently used for titanium alloy production.

Table 1. Advantages/Disadvantages of Electron Beam vs. Plasma Arc

Electron Beam	Plasma Arc
Advantages	
High scrap usage rate	High scrap usage rate
High melt rate	Composition control
Large rectangular ingots	—
Removal of inclusions	Removal of inclusions
Disadvantages	
Composition control of high vapor pressure elements (e.g., Al)	Plasma torch heat input control
	Smaller and only round ingots
—	Lower melt rate

2.2 Details of the EBCHM Ingot. A round, 760-mm (30-in) diameter ingot of Ti-6Al-4V weighing 3,994 kg (8,786 lb) was purchased from Titanium Hearth Technologies (THT). This ingot was melted in a 3.2-MW furnace with five separate electron beam (EB) guns (3 of 750 kW and 2 of 500 kW)—one on the feed stock, one on the initial melt pool, two in the refining section, and one on the ingot mold.

The blend composition used to make this heat consisted of 31.6% titanium sponge, 62.4% titanium Ti-6Al-4V turnings, and the balance aluminum shot and V0Al master alloy.

During the melt, a sample of the hot metal was taken for chemical analysis every 12.5 cm (5 in) along the ingot. The results of these analyses are shown in Table 2, and additional composition ranges for other elements are listed in Table 3.

Table 2. Chemical Composition of the Ingot in Weight Percent

Element	Al	V	O	Fe
Average	6.28	4.16	0.176	0.151
Std. Dev.	0.145	0.068	0.004	0.003
Max.	6.66	4.25	0.181	0.155
Min.	6.05	3.97	0.166	0.144
Range	0.61	0.28	0.015	0.011

Table 3. Composition Ranges in Weight Percent

Element	Sn	Zr	Ni	Mo	Mn	Si	Cr	Cu	H	C
Minimum	0.017	0.022	0.032	0.026	0.0	0.0	0.024	0.001	0.007	0.024
Maximum	0.019	0.024	0.035	0.027	—	—	0.036	0.004	0.010	0.026

These samples were taken to ensure the composition's uniformity along the ingot length. Adjustments (additions) must be made during melting to compensate for the loss of high-vapor pressure elements. Aluminum is one such element, and it was added continuously during the melt. Figure 2 plots the average composition of the three principal elements of aluminum, vanadium, and oxygen vs. the location along the ingot. While composition control has been a concern in the past for EBCHM, excellent control of Al was obtained along the length of this ingot.

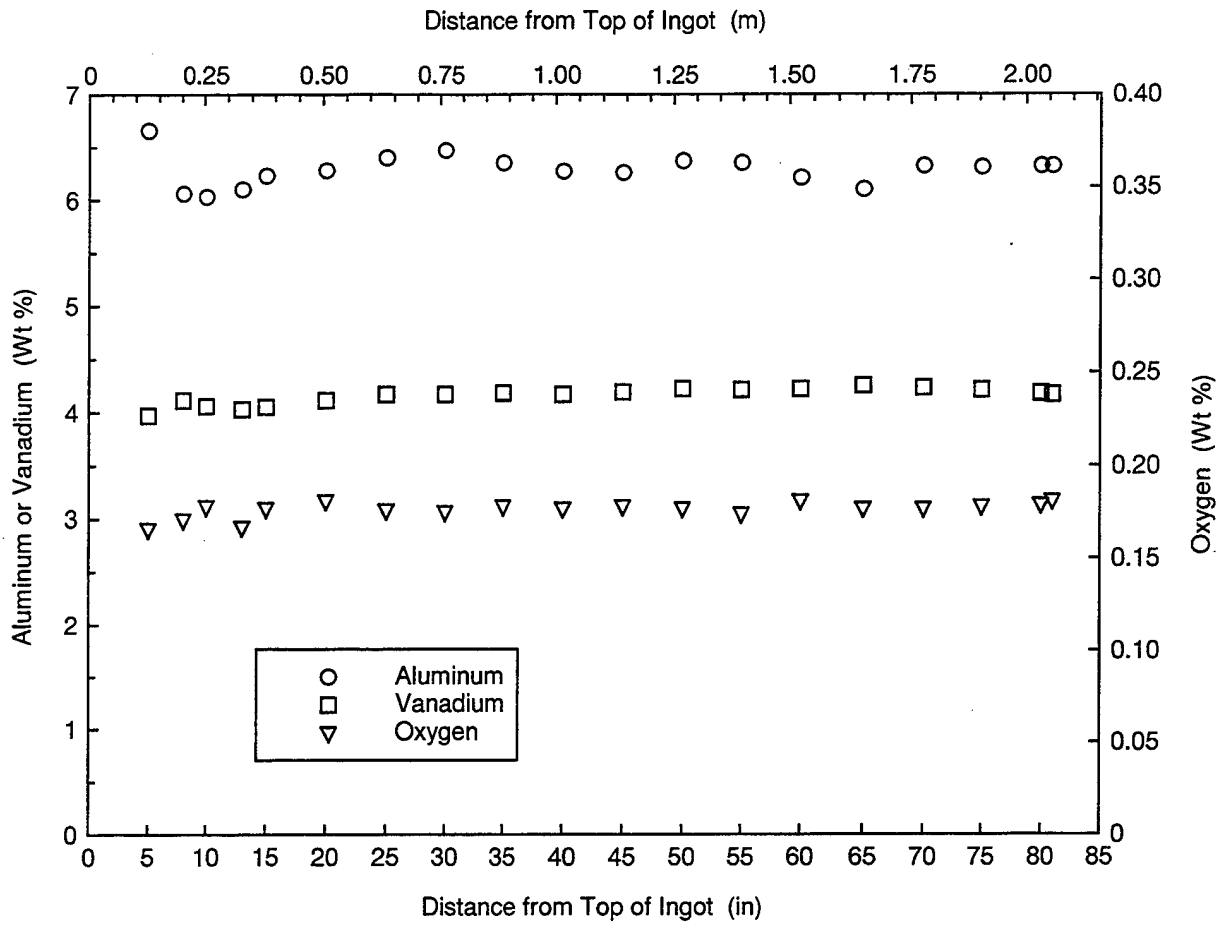

Figure 2. Chemical Composition of Single-Melt Ti-6Al-4V Ingot Produced by EBCHM.

The ingot was first conditioned by removing approximately 6.4 mm (0.25 in) from the circumference by turning and then rolling it on conventional steel mill facilities according to the following schedule:

(a) The ingot was heated to 1150 °C (2100 °F) and rolled to a slab 210 mm thick × 1030 mm wide × 3,810 mm long (8.25 in thick × 40.5 in wide × 150 in long).

(b) The ingot was cut into three sections and reheated to 940 °C (1725 °F).

(c) The ingot was then rolled to 25-mm (1-in), 38-mm (1.5-in), and 64-mm (2.5-in) thick plates.

(d) The plates were annealed at 940 °C (1725 °F) for 2 hr, and roller leveled.

(e) A final mill anneal occurred at 760 °C (1400 °F) for 1 hr.

(f) Each plate thickness was cut into two pieces and finished by overall belt grinding.

The rolled plates had the following dimensions:

(a) two plates were 25 mm thick × 1,232 mm wide × 2,908 mm long (1 in × 48.5 in × 114.5 in);

(b) two plates were 38 mm thick × 927 mm wide × 2,451 mm long (1.5 in × 36.5 in × 96.5 in); and

(c) two plates were 64 mm thick × 927 mm wide × 2,451 mm long (2.5 in × 36.5 in × 96.5 in).

This processing schedule resulted in an ingot-to-plate yield of about 71%. For larger production quantities with a single rolled thickness, an ingot-to-plate yield close to 80% should be achieved. Yield is a very important factor in determining the final cost of finished plate. The typical microstructure of the rolled Ti-6Al-4V plate is shown in Figure 3.

3. Results and Discussion

3.1 Tensile Properties. The tensile properties of the plate product are given in Table 4. Two tensile test specimens were taken from both ends of each plate in the longitudinal and

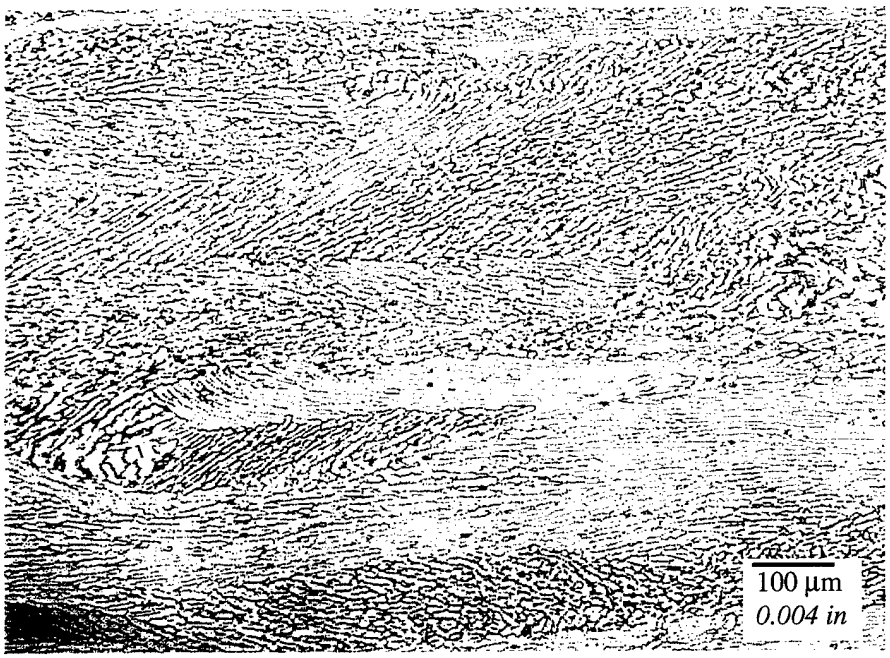

Figure 3. Longitudinal Photomicrograph of a 64-mm (2.5-in) Ti-6Al-4V Plate, THT Heat AR7006.

Table 4. Tensile Properties of the Three Plate Thicknesses in the Longitudinal and Transverse Directions

Thickness		Orientation	Tensile Strength		Yield Strength		Elongation	Reduction of Area
(in)	(mm)		(ksi)	(MPa)	(ksi)	(MPa)	(%)	(%)
0.97	25	L	145	999	134	923	13	21
0.97	25	T	149	1027	138	951	15	24
1.5	38	L	142	978	132	909	12	22
1.5	38	T	144	992	135	930	13	23
2.5	64	L	138	951	128	882	13	24
2.5	64	T	140	965	132	909	13	25
MIL-T-9046J [4]		Spec. Min:	130	896	120	827	10	—

transverse directions. Thus, each data point in Table 4 is an average of eight readings. All values exceed the requirements of MIL-T-9046J [4], Grade AB-1, and MIL-DTL-46077F [5]. Values for standard-processed Ti-6Al-4V alloy can be found in Appendix A.

3.2 Fracture Toughness. Fracture toughness was measured on the 2.5-in plate in three orthogonal directions, as shown in Figure 4. Each value is the average of four measurements, two each from the ends of one plate. Two of the S-T measurements were invalid K_Q values because of insufficient specimen thickness to meet the requirements of the ASTM E399 specification.

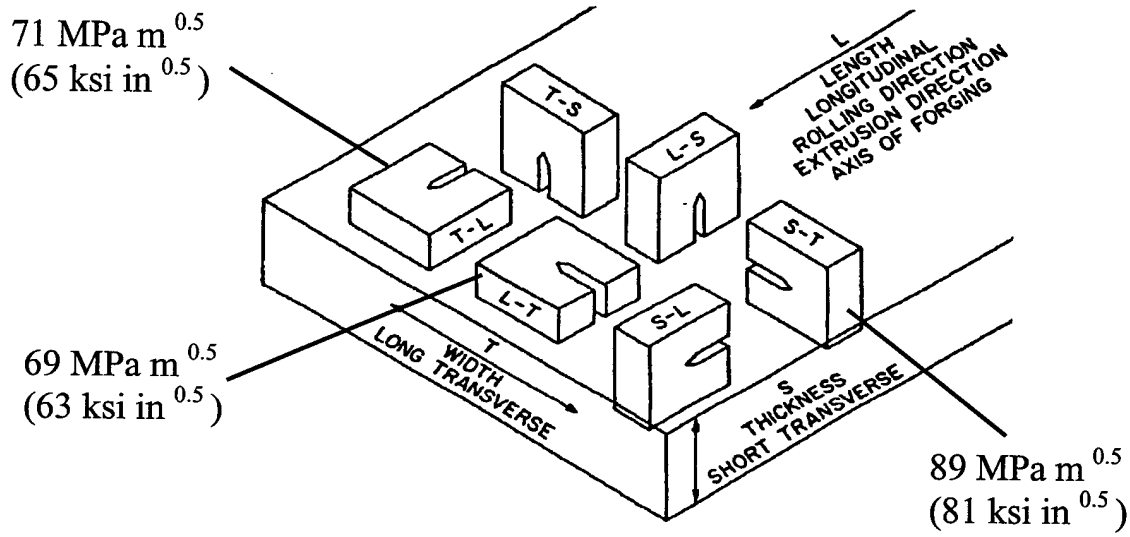

Figure 4. Fracture Toughness (K_{Ic}) of 64-mm (2.5-in) Plate.

3.3 Fatigue. High-cycle fatigue results are given in Figure 5. The fatigue life was slightly below what would be expected for a conventional Ti-6Al-4V aerospace plate and is attributed to the processing route and final mill anneal, which were selected to develop optimum ballistic properties. This resulted in a relatively coarse microstructure (see Figure 3) that was not optimal for fatigue life. For armor applications, fatigue life is usually not of primary importance because the thickness of the plate is dictated by the required protection level, rather than by structural considerations.

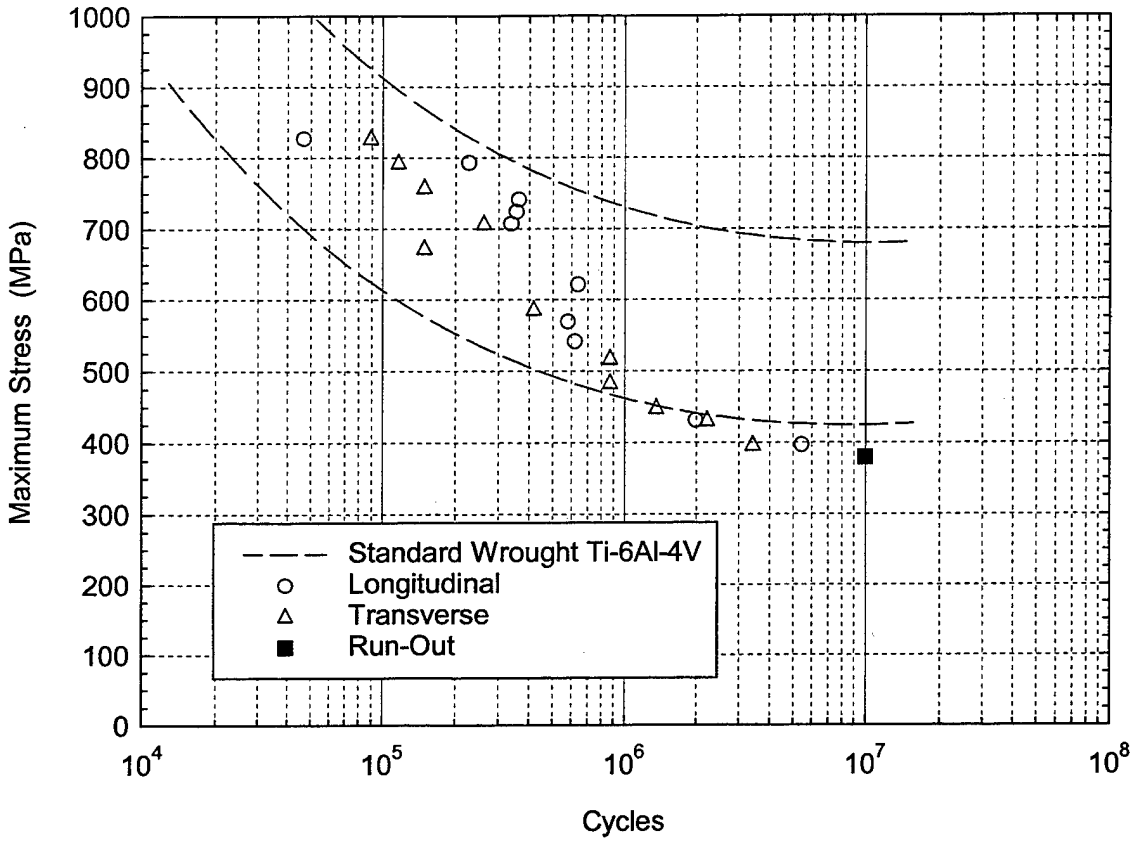

Figure 5. High-Cycle Fatigue Data for Smooth (Unnotched) Specimens (K_t = 1.0).

3.4 Ballistic Properties. Ballistic testing was performed on the three plate thicknesses with 20-mm fragment simulating projectiles (FSP) and 30-mm armor piercing discarding sabot (APDS) projectiles. These projectiles are shown in Figure 6. All target plates were positioned normal to the penetrator line of flight (0 degrees obliquity). Ballistic testing was performed according to standard military test procedures [6] to obtain V_{50} ballistic limit values. The plate size was 305 mm × 457 mm (12 in × 18 in). Ballistic test results are summarized in Table 5. The expected values in Table 5 are the required passing values developed for MIL-DTL-46077F [5] for the respective thickness. The 30-mm APDS data tables were developed for MIL-DTL-46077F, but were never included in the final specification. For comparison purposes, V_{50} velocities are given for equivalent plate thicknesses of standard wrought product.

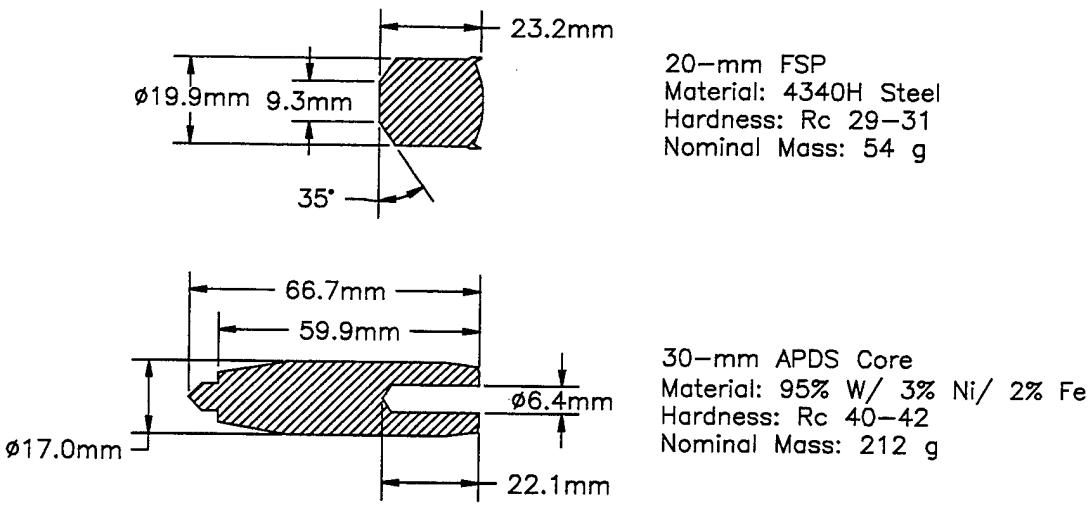

Figure 6. Projectiles Used in Ballistic Evaluation.

Table 5. Ballistic Properties of EBCHM Ti-6Al-4V Plate and Other Sources

Thickness		Material	Test Projectile	Test V_{50}		Expected V_{50}[a]	
(mm)	(in)			(m/s)	(f/s)	(m/s)	(f/s)
25.35	1	EB Single Melt	20-mm FSP	1016	3333	950	3117
26.72	1	Standard	20-mm FSP	1023	3356	1008	3307
38.79	1.5	EB Single Melt	20-mm FSP	1493	4898	1362	4469
38.30	1.5	Standard	20-mm FSP	1494	4902	1352	4436
63.96	2.5	EB Single Melt	30-mm APDS	932	3058	889	2917
63.83	2.5	Standard	30-mm APDS	941	3087	888	2913

[a]From MIL-DTL-46077F [5] for the 20-mm FSP, or from existing data in the case of the 30-mm APDS.

Photographs of the front and back surfaces of the 38-mm and 64-mm thick plates after shooting are shown in Figures 7 and 8, respectively. Figure 9 shows a close-up view of impact crater and rear surface bulge for the 25-mm-thick plate. All of the results compared favorably to prior ballistic results with standard wrought Ti-6A1-4V plate [7–9]. The detailed ballistic data are provided in Appendix B.

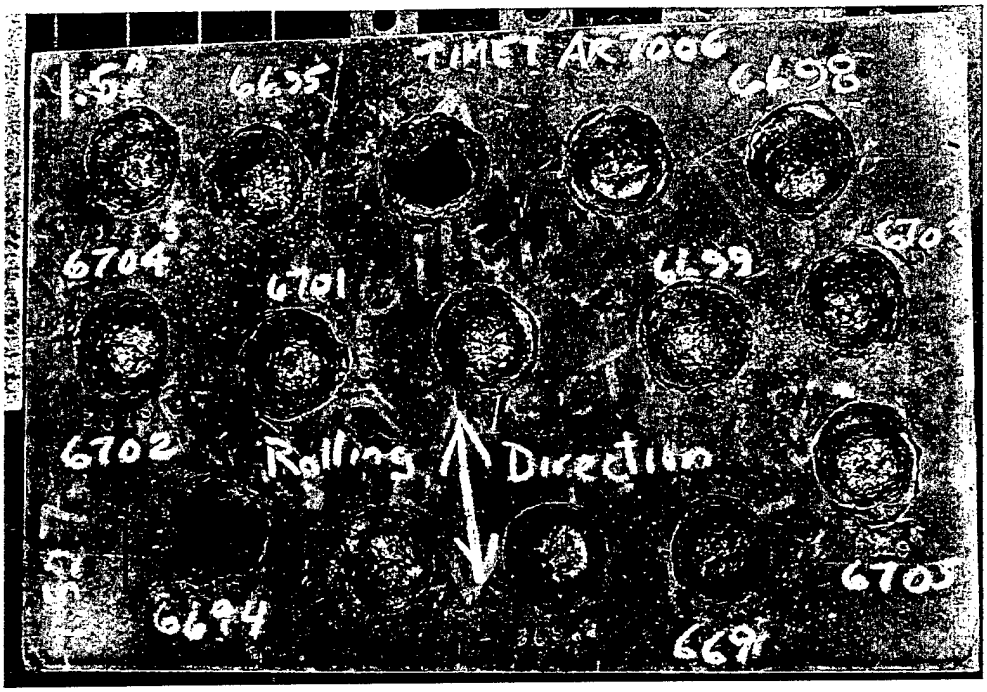

(a) Front

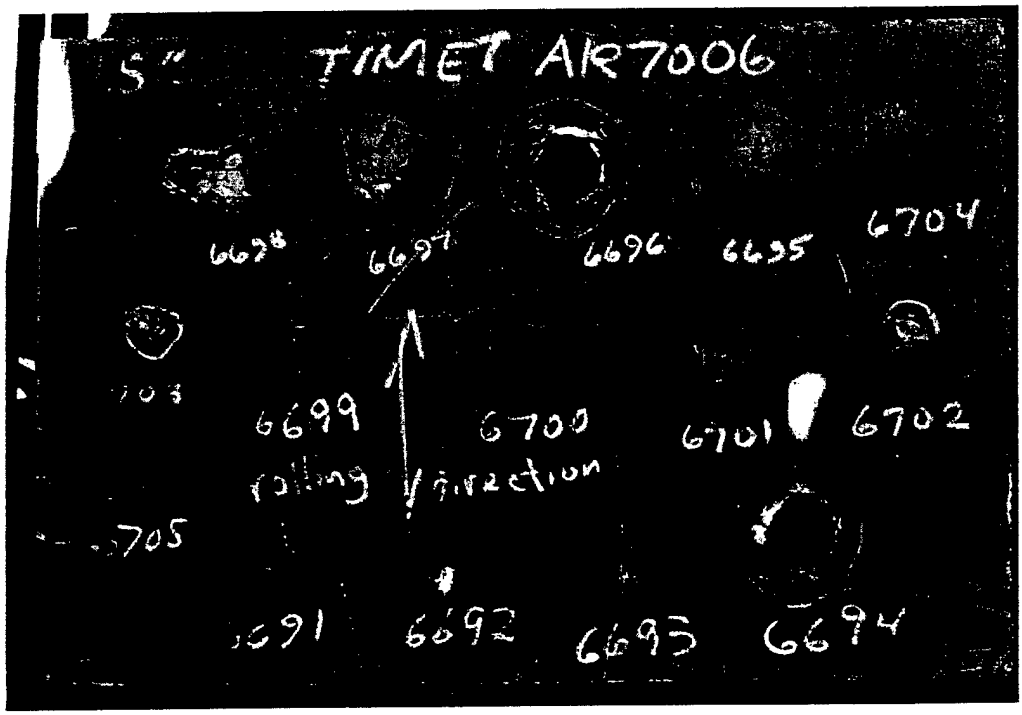

(b) Rear

Figure 7. Photographs of 38-mm (1.5-in) EBCHM Plate After Ballistic Testing.

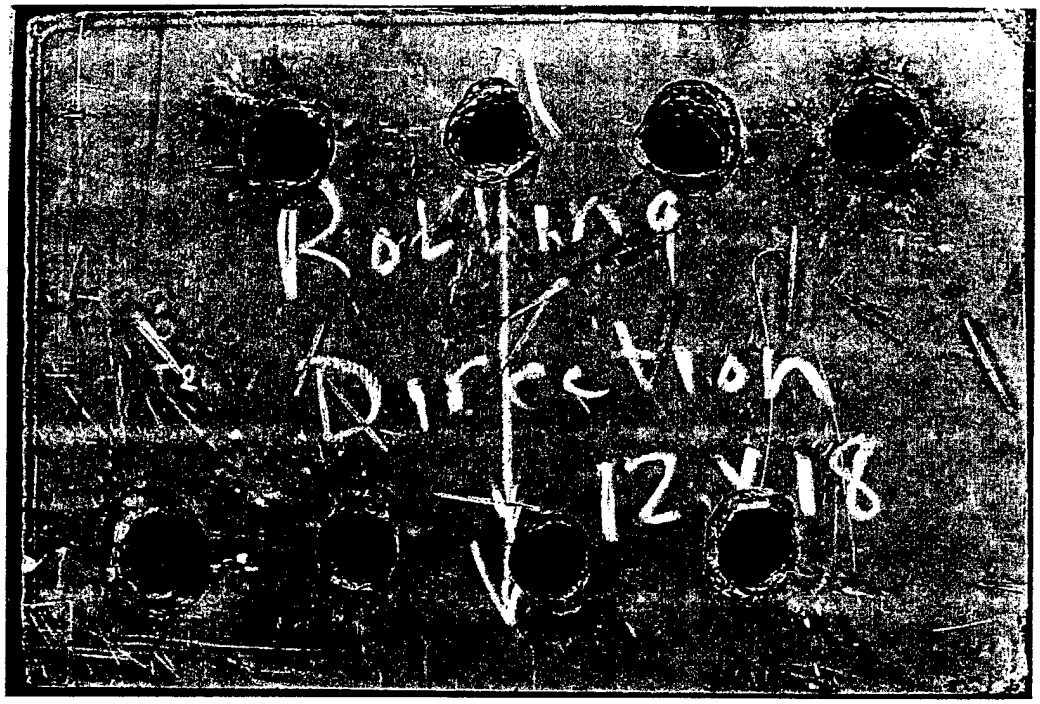

(a) Front

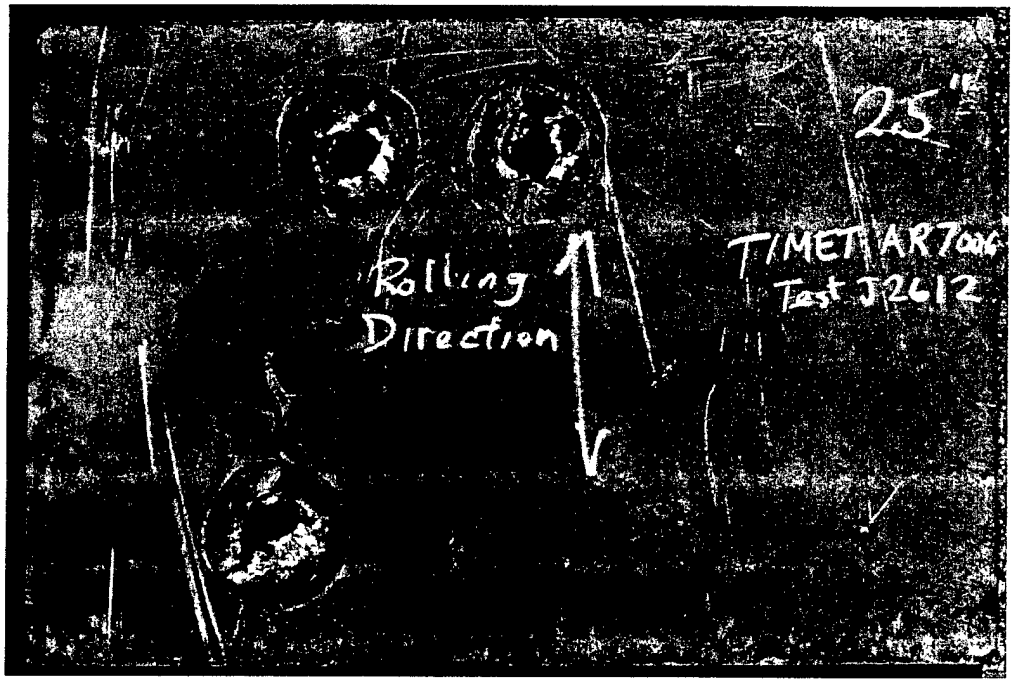

(b) Rear

Figure 8. Photographs of 64-mm (2.5-in) EBCHM Plate After Ballistic Testing.

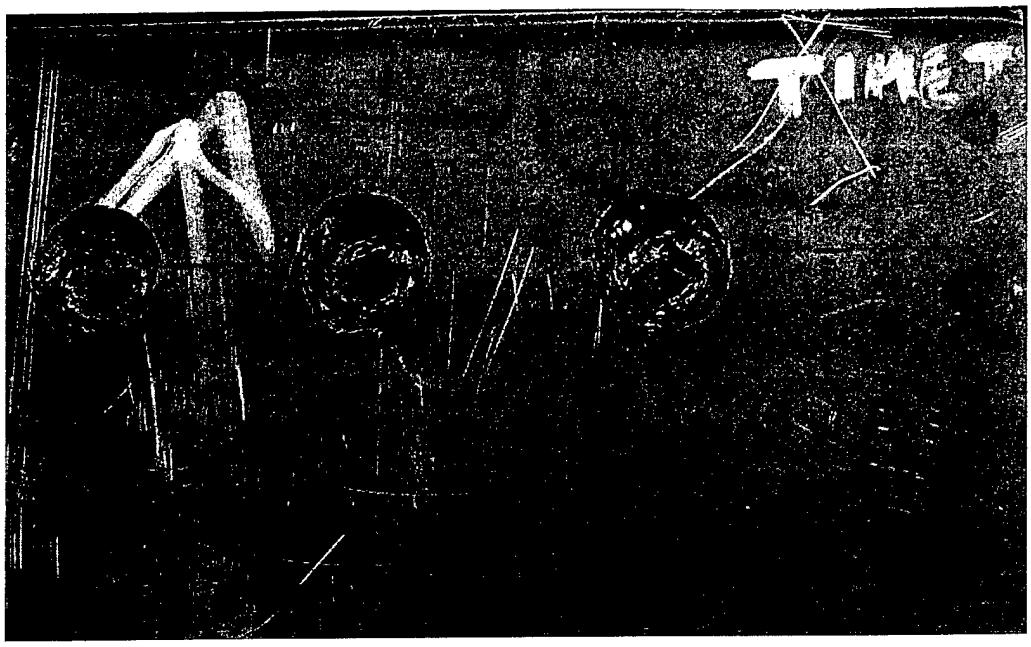

(a) Front

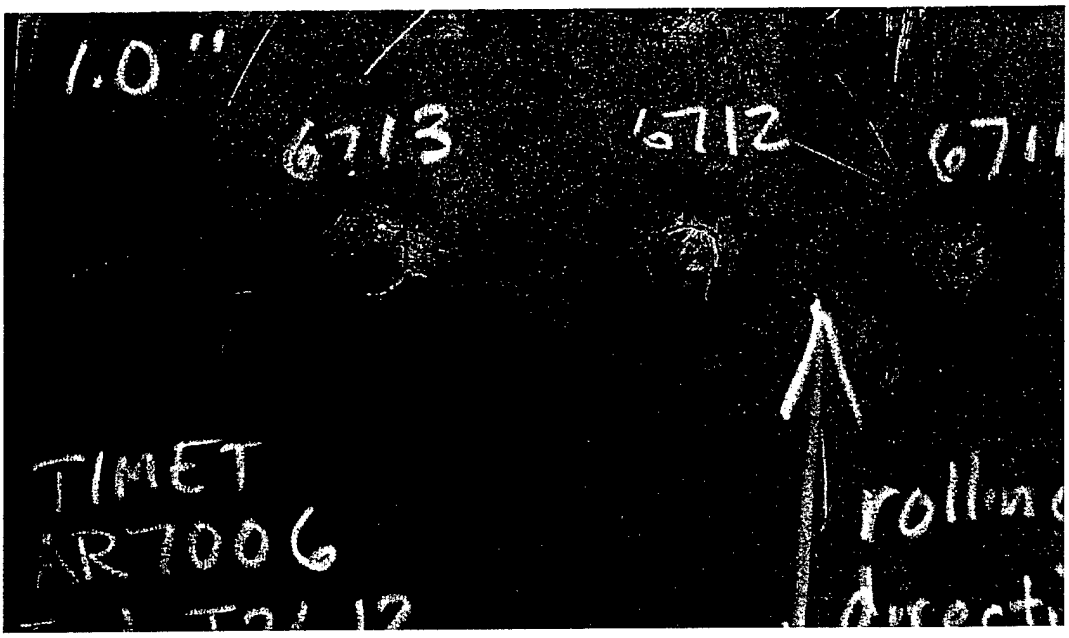

(b) Rear

Figure 9. Close-Up Photographs of Impact Locations on the 25-mm (0.97-in) EBCHM Plate.

4. Potential Applications

Numerous U.S. Army programs can benefit from the cost reductions that might be achieved using single-melt titanium alloy products, including the Future Combat System, the M1A2 Abrams Main Battle Tank, the M2 Bradley Infantry Fighting Vehicle, the M113, mortar tubes, the Crusader, and the Ultralightweight 155-mm Howitzer.

5. Recommendations and Future Work

To further characterize this heat and the quality of single, cold-hearth melting of titanium alloys, the following activities are underway or recommended:

- Weldability is currently being evaluated at the United Defense Limited Partnership, San Jose, CA.

- X-ray pole figures are being generated by the Structural Materials Centre, Defence Research Agency (DRA), United Kingdom, to determine the crystallographic texture of the plates.

- Ballistic evaluation of the 25-mm (1-in) plate is ongoing in Australia and Canada under The Technical Cooperation Program (TTCP). Both countries will use 12.7-mm APM2 projectiles and possibly others.

- Another ingot should be purchased, preferably rectangular, for further qualification and actual application to U.S. Army production component(s).

6. Summary and Conclusions

A 762-mm (30-in) diameter, 3,994-kg (8,786-lb) electron beam, single melt of Ti-6Al-4V was produced and rolled to plates of three different thicknesses. The results of the mechanical and ballistic properties may be summarized as follows:

- This EBCHM heat met all the requirements of the new military specification for titanium alloys, MIL-DTL-46077F [5].

- Chemical composition was within specification limits along the entire length of the ingot.

- Ballistic performance was excellent and compared very favorably to conventional Ti-6Al-4V aerospace-quality plate.

- Tensile mechanical properties and fracture toughness were similar to those of conventional Ti-6Al-4V aerospace-quality plate.

- The high-cycle fatigue life was slightly less than that of conventional Ti-6Al-4V aerospace-quality plate. When good fatigue performance is required, a conversion route that produces the appropriate microstructure should be selected.

The electron beam, cold hearth, single melt process can provide titanium alloy plate that is suitable for many Army applications, including armor and structural components. In quantity, the price is expected to be < $22/kg ($10/lb).

INTENTIONALLY LEFT BLANK.

7. References

1. Montgomery, J. S., M. G. H. Wells, B. Roopchand, and J. W. Ogilvy. "Low-Cost Titanium Armors for Combat Vehicles." *Journal of Metals,* vol. 49, pp. 45–47, 1997.

2. Wells, M. G. H., B. Roopchand, J. S. Montgomery, and W. S. Gooch. "Titanium Applications and R&D for Army Ground Systems." *Proceedings of the Symposium on Non-Aerospace Applications of Titanium,* pp. 289–296, edited by F. H. Froes et al., San Antonio, TX, TMS, Warrendale, PA, February 1998.

3. Chamblen, C. E., W. H. Buttrill, and G. B. Hunter. "Titanium Alloy Hearth Melt Technology." *Titanium '92,* pp. 2452–2458, edited by F. H. Frows and I. Caplan, Science and Technology, The Metals Society, 1993.

4. U.S. Department of Defense. *Titanium and Titanium Alloy, Sheet, Strip, and Plate.* MIL-T-9046J, Washington, DC.

5. U.S. Department of Defense. *Detail Specification: Armor Plate, Titanium Alloy, Weldable.* MIL-DTL-46077F, Washington, DC, 1999.

6. U.S. Department of Defense. *Military Standard: V50 Ballistic Test for Armor.* MIL-STD-662E, Washington, DC, 1987.

7. Burkins, M. S., J. Hansen, J. Paige, and P. Turner. "The Effect of Thermo-Mechanical Processing on the Ballistic Limit Velocity of Extra Low Intenstitial Titanium Alloy Ti-6AL-4V." ARL-MR-486, U.S. Army Research Laboratory, Aberdeen Proving Ground, MD, July 2000.

8. Burkins, M. S., W. W. Love, and J. R. Wood. "Effect of Annealing Temperature on the Ballistic Limit Velocity of Ti-6Al-4V ELI." ARL-MR-359, U.S. Army Research Laboratory, Aberdeen Proving Ground, MD, August 1997.

9. Burkins, M. S. Personal Communication with J. C. Fanning, October 1995, as published in "Terminal Ballistic Properties of TIMETAL-62S." *Proceedings of the 8th World Conference on Titanium,* Institute of Materials, Birmingham, UK, vol. 2, p. 1688–1695, 1995.

INTENTIONALLY LEFT BLANK.

Appendix A:

Chemical Analysis and Tensile Testing Data

INTENTIONALLY LEFT BLANK.

Table A-1. Chemical Analysis for Standard-Processed Ti-6Al-4V Plates

Heat/Test No.	Source	Thickness (mm)	Average Chemical Composition (Wt %)									
			Al	V	O	Fe	C	H	N	Y	Other	Ti
D940517	OREMET	63.83	6.34	3.98	0.18	0.19	0.015	0.0019	0.01	< 0.001	<0.40	Balance
G3540, Test R1493	TIMET	38.30	6.16	3.89	0.198	0.156	0.012	0.0056	0.006	< 0.001	0.050	Balance
G9782, Test J0411	TIMET	26.72	6.245	3.925	0.175	0.175	0.012	0.0091	0.007	< 0.001	<0.40	Balance

Table A-2. Average Tensile Testing Data for Standard-Processed Ti-6Al-4V Plates

Heat/Test No.	Source	Thickness (mm)	Yield Strength (MPa)		Ultimate Tensile Strength (MPa)		Elongation (%)		Reduction in Area (%)	
			Long.	Trans.	Long.	Trans.	Long.	Trans.	Long.	Trans.
D940517	OREMET	63.83	910.8	952.2	981.8	1028.0	16.0	16.0	34.5	26.7
G3540, Test R1493	TIMET	38.30	882.5	958.4	972.2	1034.2	16.0	15.0	27.0	31.0
G9782, Test J0411	TIMET	26.72	875.6	944.6	972.2	1020.4	15.0	13.0	27.0	28.0

INTENTIONALLY LEFT BLANK.

Appendix B:

Ballistic Test Data

INTENTIONALLY LEFT BLANK.

Material:	Ti - 6Al - 4V, EB Single-Melt	**Source:**	THT, PA
Heat:	TIMET AR7006, Test #J2612	**Additional Processing:**	None
Thickness:	63.96 mm (2.518")	**Hardness:**	321 BHN
Penetrator:	30mm APDS (OSRAM)	**Obliquity:**	0°

Tested V_{50} Limit Velocity: 932 m/s **Std Dev:** 6 m/s

V_S (m/s)	Pitch (°)	Yaw (°)	Result (CP/PP)	V_R (m/s)	L_R (mm)	M_R (g)	P_R (mm)	Comments	Shot No.
889	0	0.25L	PP	NA	NA	NA	42	5-mm bulge with crack	6677
899	0	0	PP	NA	NA	NA	44	5-mm bulge with crack	6674
912	0.50U	0.75L	PP	NA	NA	NA	43	8.5-mm bulge with crack	6678
925	0.25U	0.25R	*PP*	NA	NA	NA	50	10-mm bulge with cracks	6680
927	1.00U	0	*PP*	NA	NA	NA	49	10-mm bulge with cracks	6679
938	0.25U	0	*CP*	169 98	23.4 9.5	Lost 42.3	NA	penetrator spall	6676
939	0.50U	0.25R	*CP*	181	7.2	59.8	NA	spall	6675
945	0.25D	0	CP	151 97	27.8 9.6	99.8 56.1	NA	penetrator spall	6681

Note: See p. 31 for a list of abbreviations.

Material: Ti - 6Al - 4V, EB Single-Melt
Heat: TIMET AR7006, Test #J2612
Thickness: 25.35 mm (0.998")
Penetrator: 20mm FSP

Source: THT, PA
Additional Processing: None
Hardness: 340 BHN
Obliquity: 0°

Tested V_{50} Limit Velocity: 1016 m/s **Std Dev:** 8 m/s

V_S (m/s)	Pitch (°)	Yaw (°)	Result (CP/PP)	V_R (m/s)	L_R (mm)	M_R (g)	P_R (mm)	Comments	Shot No.
947	0.50D	0.25L	PP	NA	NA	NA	11	6-mm bulge with cracks	6711
984	0.25D	0.75R	PP	NA	NA	NA	13.5	5-mm bulge with cracks	6712
1005	0.50U	0.50R	PP	NA	NA	NA	15	8-mm bulge with cracks	6714
1008	0.75D	0.75L	*PP*	NA	NA	NA	17	7-mm bulge with cracks	6713
1009	0.50D	0.50L	*CP*	79	4.2	4.0	20	spall	6715
1021	0.50U	Lost	*PP*	NA	NA	NA	23.5	13-mm bulge with cracks	6716
1026	0.50D	0.50U	*CP*	133	15.4	40.2	NA	spall	6710

Note: See p. 31 for a list of abbreviations.

Material: Ti - 6Al - 4V, EB Single-Melt
Heat: TIMET AR7006, Test #J2612
Thickness: 38.79 mm (1.527")
Penetrator: 20mm FSP

Source: THT, PA
Additional Processing: None
Hardness: 351 BHN
Obliquity: 0°

Tested V_{50} Limit Velocity: 1493 m/s **Std Dev:** 8 m/s

V_S (m/s)	Pitch (°)	Yaw (°)	Result (CP/PP)	V_R (m/s)	L_R (mm)	M_R (g)	P_R (mm)	Comments	Shot No.
1409	1.25U	0.75R	PP	NA	NA	NA	19	4-mm bulge	6691
1414	0.75U	1.00L	PP	NA	NA	NA	21	6-mm bulge with crack	6692
1450	0.50D	0.75L	PP	NA	NA	NA	22	8-mm bulge with crack	6693
1467	0.50D	2.25L	PP	NA	NA	NA	22	9-mm bulge with cracks	6704
1472	0.25D	0.75R	PP	NA	NA	NA	23.5	9.5-mm bulge with crack	6699
1473	0.75U	1.25U	PP	NA	NA	NA	26	11-mm bulge with cracks	6702
1474	0.25U	2.00R	PP	NA	NA	NA	24	10-mm bulge with cracks	6701
1479	1.50D	1.25L	*PP*	NA	NA	NA	30	9-mm bulge with cracks	6695
1486	0.25U	0.25R	*CP*	50	8.5	22.5	23	spall	6698
1495	1.25D	0.50L	*PP*	NA	NA	NA	25	9-mm bulge with cracks	6700
1498	1.50D	2.25L	*PP*	NA	NA	NA	23	8-mm bulge with cracks	6705
1498	0.25D	0.25L	*CP*	92	2	NM	26	chip	6697
1502	0.75U	0	*CP*	84	3	NM	25	chip	6703
1509	1.25D	0.50L	CP	116	8.8	39.5	NA	spall	6696
1530	2.00U	2.00L	CP	88	24.0	64.5	NA	spall (center)	6694

Note: See p. 31 for a list of abbreviations.

Material: Ti - 6Al - 4V, ASTM B265-94 Gr-5 **Source:** OREMET, OR
Heat: D940517 **Additional Processing:** None
Thickness: 63.83 mm (2.513") **Hardness:** 311 BHN
Penetrator: 30mm APDS (OSRAM) **Obliquity:** 0°

Tested V_{50} Limit Velocity: 941 m/s **Std Dev:** 9 m/s

V_S (m/s)	Pitch (°)	Yaw (°)	Result (CP/PP)	V_R (m/s)	L_R (mm)	M_R (g)	P_R (mm)	Comments	Shot No.
898	0.50U	0.25R	PP	NA	NA	NA	37	5-mm bulge	5017
919	0.25U	1.00R	PP	NA	NA	NA	48	11-mm bulge with cracks	5021
931	0.75D	0	*PP*	NA	NA	NA	44	8-mm bulge with cracks	5024
933	0.25U	0.50R	*PP*	NA	NA	NA	48.5	10-mm bulge with cracks	5022
934	0.75U	0	*PP*	NA	NA	NA	50	11-mm bulge with cracks	5025
944	0.50U	0	*CP*	118 124	24.9 9.5	110 39.9	NA	penetrator spall	5023
951	0.75U	0.50R	*CP*	94	9.3	48.2	NA	spall	5019
955	0.50U	0	*CP*	180 122	26 9.9	NM 35.3	NA	penetrator spall	5026
1008	0	0.50R	CP	318 121	25 12.1	NM. 47.6	NA	penetrator spall	5018

Note: See p. 31 for a list of abbreviations.

Material: Ti - 6Al - 4V, MIL-T-9046J
Heat: G9782, Test J0411
Thickness: 26.72 mm (1.052")
Penetrator: 20mm FSP

Source: TIMET, NV
Additional Processing: None
Hardness: 302 BHN
Obliquity: 0°

Tested V_{50} Limit Velocity: 1023 m/s **Std Dev:** 13 m/s

V_S (m/s)	Pitch (°)	Yaw (°)	Result (CP/PP)	V_R (m/s)	L_R (mm)	M_R (g)	P_R (mm)	Comments	Shot No.
956	3.00U	0.75L	PP	NA	NA	NA	11	4-mm bulge with cracks	5036
977	1.50U	0	PP	NA	NA	NA	12	5.5-mm bulge with cracks	5037
1003	0.25D	0.25L	*PP*	NA	NA	NA	15.5	9-mm bulge with cracks	5079
1009	2.50U	2.25R	*PP*	NA	NA	NA	15	9.5-mm bulge with cracks	5046
1011	0.75U	2.00R	*PP*	NA	NA	NA	14	7-mm bulge with cracks	5048
1014	0.50D	2.75L	*PP*	NA	NA	NA	17	7-mm bulge with cracks	5038
1021	0	0.50R	*CP*	53	5.4	6.4	15.5	spall	5078
1023	1.00D	1.25R	*CP*	58	6.4	6.7	NA	spall	5047
1034	1.00U	0	*CP*	138	9.7	7.1	NA	spall	5048
1036	0.75D	3.00L	*CP*	101	5	NM	NA	spall	5045
1038	0.25D	0.50R	*CP*	89 169	14.4 6.2	39.3 3.6	NA	penetrator spall	5077
1040	0.50D	0.50L	CP	83	15.4	28.1	NA	spall	5044
1045	1.50U	0.50L	*PP*	NA	NA	NA	16	Plug pushed out 3 mm	5040
1045	0	2.50L	CP	60	11.5	9.7	NA	spall	5042
1053	2.00U	3.75R	CP	172	10.0	8.6	NA	spall	5043
1060	2.00U	1.25R	CP	53 110	14.1 15.9	37.5 25.8	NA	penetrator spall	5041
1062	0	0.50L	CP	86 86	13.6 20.2	38.8 33.9	NA	penetrator spall	5039

Note: See p. 31 for a list of abbreviations.

Material: Ti - 6Al - 4V, MIL-T-9046J
Heat: G3540, Test R1493
Thickness: 38.30 mm (1.508")
Penetrator: 20mm FSP

Source: TIMET, NV
Additional Processing: None
Hardness: 321 BHN
Obliquity: 0°

Tested V_{50} Limit Velocity: 1494 m/s **Std Dev:** 12 m/s

V_S (m/s)	Pitch (°)	Yaw (°)	Result (CP/PP)	V_R (m/s)	L_R (mm)	M_R (g)	P_R (mm)	Comments	Shot No.
Lost	Lost	Lost	PP	NA	NA	NA	26	10-mm bulge with cracks	3851
1302	1.00D	1.25R	PP	NA	NA	NA	16	5-mm bulge with crack	3838
1442	0.50D	0.50R	PP	NA	NA	NA	22	6-mm bulge with crack	3840
1455	9.00U	5.00R	PP	NA	NA	NA	24	9-mm bulge with crack	3839
1471	0	0.75L	PP	NA	NA	NA	23	8-mm bulge with crack	3843
1475	0.50D	1.25L	*PP*	NA	NA	NA	22.5	6-mm bulge with cracks	3847
1480	0	0.50R	*PP*	NA	NA	NA	23	8-mm bulge with cracks	3844
1488	1.00D	2.00L	PP	NA	NA	NA	24	10-mm bulge with cracks	3848
1497	0.25D	0.50L	*PP*	NA	NA	NA	24	8-mm bulge with cracks	3850
1499	0.25U	1.00R	*CP*	62	10.8	28.7	NA	spall	3842
1506	0.50U	0	*CP*	102	5	NM	NA	spall	3852
1506	0.50U	0.25R	*CP*	136	8	NM	NA	spall	3849
1561	0.25D	0.50L	CP	112	8.8	44.6	NA	spall	3841

Note: See p. 31 for a list of abbreviations.

List of Abbreviations

NA	Not applicable.
CP	Complete penetration; penetrator or target material exits at the rear surface of the target. Asterisks (*CP*) indicate the shots that were used to calculate the V_{50}.
L_R	Residual length; the length of the residual penetrator or the thickness of ejected target material for a CP result.
M_R	Residual mass; the mass of the residual penetrator or ejected target material for a CP result.
NM	Not measured.
PIP	Penetrator in plate; penetrator lodged in impact crater.
Pitch	Attitude of projectile in the vertical direction.
PP	Partial penetration; the penetrator is defeated by the target. Asterisks (*PP*) indicate shots that were used to calculate the V_{50}.
P_R	Penetration into plate; the impact crater depth.
Result	Result of shot; CP or PP.
V_R	Residual velocity; the velocity measured behind the target when a CP result occurs. The "COMMENTS" column defines whether this velocity is for penetrator or ejected target material.
V_S	Striking velocity of projectile just prior to impacting the target.
Yaw	Attitude of projectile in the horizontal direction.

INTENTIONALLY LEFT BLANK.

NO. OF COPIES	ORGANIZATION
2	DEFENSE TECHNICAL INFORMATION CENTER DTIC OCA 8725 JOHN J KINGMAN RD STE 0944 FT BELVOIR VA 22060-6218
1	HQDA DAMO FDT 400 ARMY PENTAGON WASHINGTON DC 20310-0460
1	OSD OUSD(A&T)/ODDR&E(R) DR R J TREW 3800 DEFENSE PENTAGON WASHINGTON DC 20301-3800
1	COMMANDING GENERAL US ARMY MATERIEL CMD AMCRDA TF 5001 EISENHOWER AVE ALEXANDRIA VA 22333-0001
1	INST FOR ADVNCD TCHNLGY THE UNIV OF TEXAS AT AUSTIN 3925 W BRAKER LN STE 400 AUSTIN TX 78759-5316
1	DARPA SPECIAL PROJECTS OFFICE J CARLINI 3701 N FAIRFAX DR ARLINGTON VA 22203-1714
1	US MILITARY ACADEMY MATH SCI CTR EXCELLENCE MADN MATH MAJ HUBER THAYER HALL WEST POINT NY 10996-1786
1	DIRECTOR US ARMY RESEARCH LAB AMSRL D DR D SMITH 2800 POWDER MILL RD ADELPHI MD 20783-1197

NO. OF COPIES	ORGANIZATION
1	DIRECTOR US ARMY RESEARCH LAB AMSRL CI AI R 2800 POWDER MILL RD ADELPHI MD 20783-1197
3	DIRECTOR US ARMY RESEARCH LAB AMSRL CI LL 2800 POWDER MILL RD ADELPHI MD 20783-1197
3	DIRECTOR US ARMY RESEARCH LAB AMSRL CI IS T 2800 POWDER MILL RD ADELPHI MD 20783-1197
	ABERDEEN PROVING GROUND
2	DIR USARL AMSRL CI LP (BLDG 305)

NO. OF COPIES	ORGANIZATION
7	COMMANDER US ARMY TACOM AMSTA TR S T FURMANIAK S GOODMAN D HANSEN L PROKURAT FRANKS D TEMPLETON D THOMAS AMSTA TR STI J CARIE WARREN MI 48397-5000
1	PROJECT MANAGER ABRAMS TANK SYSTEM SFAE GCSS W ABS J ROWE WARREN MI 48397-5000
3	COMMANDER US ARMY RESEARCH OFFICE J BAILEY K IYER K LOGAN PO BOX 12211 RESEARCH TRIANGLE PARK NC 27709-2211
1	COMMANDER NGIC J CRIDER W GSTATTENBAUER 220 SEVENTH AVENUE CHARLOTTESVILLE VA 22901-5391
10	CRUSADER OPM SFAE GCSS CR E B ROOPCHAND (10 CPS) BLDG 171A PICATINNY ARSENAL NJ 07806-5000

NO. OF COPIES	ORGANIZATION
1	CIA OSWR DSD W WALTMAN RM 5P0110 NHB WASHINGTON DC 20505
1	DIRECTOR DARPA 3701 NORTH FAIRFAX DR ARLINGTON VA 22203-1714
1	PM BFVS SFAE GCSS W BV S M KING WARREN MI 48397-5000
1	CDR CARDEROCK DIV NSWC CODE 28 R PETERSON 9500 MACARTHUR BLVD W BETHESDA MD 20817-5700
1	DEPT OF NAVY OFFICE DIR REPORTING PROG MGR ADVCED AMPHIBIOUS ASSLT D ERDLEY WASHINGTON DC 20380-0001
3	LAWRENCE LIVERMORE NATL LAB R GOGOLEWSKI L290 R LANDINGHAM L369 J REAUGH L32 PO BOX 808 LIVERMORE CA 94550
2	LOS ALAMOS NATL LAB F ADDESSIO M BURKETT LOS ALAMOS NM 87545

NO. OF COPIES	ORGANIZATION
5	SANDIA NATL LAB J ASAY MS 0548 R BRANNON MS 0820 L CHHABILDAS MS 0821 D CRAWFORD ORG 0821 M FORRESTAL DIV 1551 PO BOX 5800 ALBUQUERQUE NM 87185-0307
1	NAVAL RSCH LABORATORY CODE 6684 4555 OVERLOOK AVE SW WASHINGTON DC 20375
1	AIR FORCE ARMAMENT LAB AFATL DLJW W COOK EGLIN AFB FL 32542
4	INST FOR ADVNCD TECH S BLESS H FAIR D LITTLEFIELD R SUBRAMANIAN 3925 W BRAKER LANE SUITE 400 AUSTIN TX 78759-5316
1	UNIV OF DAYTON RSCH INST KLA14 N BRAR 300 COLLEGE PARK DAYTON OH 45469-0182
3	SOUTHWEST RSCH INST C ANDERSON J RIEGEL J WALKER 6220 CULEBRA RD SAN ANTONIO TX 78238
4	US DEPT OF ENERGY ALBANY RSCH CENTER J HANSEN (2CPS) P TURNER (2 CPS) 1450 QUEEN AVE SW ALBANY OR 97321-2198

NO. OF COPIES	ORGANIZATION
1	BROWN UNIV DIV OF ENGINEERING R CLIFTON PROVIDENCE RI 02912
2	UNIV OF CA SAN DIEGO DEPT OF APPL MECH & ENGR SVC R011 S NEMAT NASSER M MEYERS LA JOLLA CA 92093-0411
1	ARMORWORKS W PERCIBALLI 1701 W 10TH ST SUITE 5 TEMPE AZ 85281
2	AERONAUTICAL RSCH ASSOC R CONTILIANO J WALKER PO BOX 2229 50 WASHINGTON RD PRINCETON NJ 08540
1	ALLIANT TECHSYSTEMS INC G JOHNSON 600 SECOND ST NE HOPKINS MN 55343
1	APPLIED RSCH ASSOC INC J YATTEAU 5941 S MIDDLEFIELD RD STE 100 LITTLETON CO 80123
1	APPLIED RSCH ASSOC INC D GRADY 4300 SAN MATEO BLVD NE STE A 220 ALBUQUERQUE NM 87110
1	BRIGGS COMPANY J BACKOFEN 2668 PETERSBOROUGH ST HERNDON VA 222071-2443

NO. OF COPIES	ORGANIZATION
2	CENTURY DYNAMICS INC B GERBER N BIRNBAUM 2333 SAN RAMON VALLEY BLVD SAN RAMON CA 94583-1613
3	CERCOM R PALICKA G NELSON B CHEN 1960 WATSON WAY VISTA CA 92083
1	CYPRESS INTERNTL A CAPONECCHI 1201 E ABINGDON DR ALEXANDRIA VA 22314
1	RJ EICHELBERGER 409 W CATHERINE ST BEL AIR MD 21014-3613
1	EPSTEIN AND ASSOC K EPSTEIN 2716 WEMBERLY DR BELMONT CA 94002
2	GALT ALLOYS INC S FELLOWS S GIANGIORDANO 122 CENTRAL PLAZA N CANTON OH 44702
6	GDLS W BURKE MZ436 21 24 G CAMPBELL MZ436 30 44 D DEBUSSCHER MZ436 20 29 J ERIDON MZ436 21 24 W HERMAN MZ435 01 24 S PENTESCU MZ436 21 24 38500 MOUND RD STERLING HTS MI 48310-3200
1	GENERAL RSCH CORP PO BOX 6770 SANTA BARBARA CA 93160-6770

NO. OF COPIES	ORGANIZATION
1	INTERNATL RSCH ASSOC D ORPHAL 4450 BLACK AVE PLEASANTON CA 94566
1	JET PROPULSION LAB IMPACT PHYSICS GROUP M ADAMS 4800 OAK GROVE DR PASADENA CA 91109-8099
1	KAMAN SCIENCES CORP 1500 GARDEN OF THE GODS RD COLORADO SPRINGS CO 80907
3	OGARA HESS & EISENHARDT G ALLEN D MALONE T RUSSELL 9113 LE SAINT DR FAIRFIELD OH 45014
2	ALLVAC OREMET FACILITY J KOSIN B MAHONEY 530 34TH AVE SW PO BOX 460 ALBANY OR 97321
4	POULTER LABORATORY SRI INTERNATIONAL D CURRAN R KLOOP L SEAMAN D SHOCKEY 333 RAVENSWOOD AVE MENLO PARK CA 94025
1	RMI TITANIUM CO W LOVE 2590 BIRCH ST BREA CA 92621

NO. OF COPIES	ORGANIZATION
6	RMI TITANIUM CO J BENNETT E CHRIST F JANOWSKI W PALLANTE S ROBERTSON O YU 1000 WARREN AVE NILES OH 44446
15	TIMET J FANNING (15 CPS) PO BOX 2128 HENDERSON NV 89009
1	TIMET J BARBER 1999 BROADWAY STE 4300 DENVER CO 80202
1	SAIC J FURLONG MS 264 1710 GOODRIDGE DR MCLEAN VA 22102
2	SIMULA INC R WOLFFE 10016 SOUTH 51ST ST PHOENIX AZ 85044
7	UNITED DEFENSE LP J DORSCH V HORVATICH B KARIYA M MIDDIONE R MUSANTE R RAJAGOPAL D SCHADE PO BOX 367 SANTA CLARA CA 95103
3	UNITED DEFENSE LP E BRADY R JENKINS J JOHNSON PO BOX 15512 YORK PA 17405-1512

NO. OF COPIES	ORGANIZATION
1	ZERNOW TECH SVCS INC L ZERNOW 425 W BONITA AVE SUITE 208 SAN DIMAS CA 91773
1	EMBASSY OF AUSTRALIA COUNSELLOR DEFENCE SCIENCE 1601 MASSACHUSETTS AVE NW WASHINGTON DC 20036-2273
	ABERDEEN PROVING GROUND
1	DIR USA EBCC SCBRD RT 5183 BLACKHAWK RD APG EA MD 21010-5424
1	CDR USA SBCCOM AMSCB CII 5183 BLACKHAWK RD APG EA MD 21010-5424
2	DIR USAMSAA AMXSY D AMXSY MP H COHEN BLDG 392
3	CDR USATEC STEAC LI LV E SANDERSON M SIMON (2 CPS) BLDG 400
73	DIR USARL AMSRL SL I AMSRL WM M D VIECHNICKI AMSRL WM MC J BEATTY

NO. OF COPIES	ORGANIZATION

ABERDEEN PROVING GROUND (CONT)

J MONTGOMERY (15 CPS)
J WELLS
R SQUILLACIOTI
AMSRL WM MD
D SNOHA
W ROY
AMSRL WM T
B BURNS
AMSRL WM TA
W BRUCHEY
M BURKINS (15 CPS)
W GILLICH
W GOOCH (2 CPS)
T HAVEL
D HACKBARTH
E HORWATH
Y HUANG
D KLEPONIS
H MEYER
M NORMANDIA
J RUNYEON
M ZOLTOSKI
AMSRL WM TC
K KIMSEY
M LAMPSON
L MAGNESS
D SCHEFFLER
G SILSBY
R SUMMERS
W WALTERS
AMSRL WM TD
A DIETRICH
T FARRAND
D DANDEKAR
K FRANK
A GUPTA
M RAFTENBERG
R RAJENDRAN
E RAPACKI
N RUPERT
M SCHEIDLER
S SCHOENFELD
S SEGLETES
T WEERASOORIYA
T WRIGHT
AMSRL WM TE
T NIILER

NO. OF COPIES	ORGANIZATION
3	AERONAUTICAL & MARITIME RSCH LABORTORY N MURMAN S CIMPOERU D PAUL PO BOX 4331 MELBOURNE VIC 3001 AUSTRALIA
1	ARMSCOR L DU PLESSIS PRIVATE BAG X337 PRETORIA 0001 SOUTH AFRICA
1	BATTELLE INGENIEURTECHNICK GMBH W FUCKE DUESSELDORFFER STR 9 D 65760 ESCHBORN GERMANY
1	DEFENCE RSCH AGENCY FORT HALSTEAD SEVEN OAKS KENT TN14 7BP UNITED KINGDOM
1	CARLOS III UNIV OF MADRID C NAVARRO ESCUELA POLTEENICA SUPERIOR C/. BUTARQUE 15 28911 LEGANES MADRID SPAIN
1	CELIUS MATERIAL TEKNIK KARLSKOGA AB L HELLNER S 691 80 KARLSKOGA SWEDEN
3	CENTRE D'ETUDES GRAMAT J CAGNOUX C GALLIC J TRANCHET GRAMAT 46500 FRANCE

NO. OF COPIES	ORGANIZATION
1	MINISTRY OF DEFENCE DGA DSP STTC G BRAULT 4 RUE DE LA PORTE D'ISSY 00460 ARMEES F 75015 PARIS FRANCE
1	CONDAT J KIERMEIR MAXILLANSTR 28 8069 SCHEYERN FERNHAG GERMANY
2	DEFENCE PROCUREMENT AGCY G LAUBE W ODERMATT BALLISTICS WPNS & COMBAT VEHICLE TEST CTR CH 3602 THUN SWITZERLAND
2	TDW M HELD POSTFACH 1340 D 86523 SCHROBENHAUSEN GERMANY
6	DEFENSE RSCH AGENCY W CARSON I CROUCH C FREW T HAWKINS B JAMES B SHRUSBSALL CHOBHAM LANE CHERTEY SURREY KT16 OEE UNITED KINGDOM
1	DEFENCE RSCH ESTAB SUFFIELD C WEICKERT BOX 4000 MEDICINE HAT ALBERTA TIA 8K6 CANADA

NO. OF COPIES	ORGANIZATION
1	DEFENCE RSCH ESTAB VALCARTIER ARMAMENTS DIV R DELAGRAVE 2459 PIE X1 BLVD N PO BOX 8800 CORCELETTE QUEBEC GOA 1RO CANADA
2	DEUTSCH FRANZOSISCHES FORSCHUNGSINSTITUT ST LOUIS H ERNST H LERR CEDEX 5 RUE DU GENERAL CASSAGNOU F 68301 SAINT LOUIS FRANCE
1	DIEHL GMBH AND CO M SCHILDKNECHT FISCHBACHSTRASSE 16 D 90552 ROTBENBACH AD PEGNITZ GERMANY
1	DYNAMEC RSCH AB A PERSSON PO BOX 201 S 151 23 SODERTALJE SWEDEN
2	ETBS DSTI P BARNIER M SALLES ROUTE DE GUERAY BOITE POSTALE 712 18015 BOURGES CEDEX FRANCE
1	FEDERAL MINISTRY OF DEFENCE DIR OF EQPT & TECH LAND RUV 2 D HAUG POSTFACH 1328 53003 BONN GERMANY

NO. OF COPIES	ORGANIZATION
4	FRANHOFER INSTITUT FUR KURZZEITDYNAMIK ERNST MACH INSTITUT V HOHLER E STRASSBURGER R THAM K THOMA ECKERSTRASSE 4 D 79 104 FREIBURG GERMANY
1	MINISTRY OF DEFENCE DGA/SPART C CANNAVO 10 PLACE GEORGES CLEMENCEAU BP19 F 92211 SAINT CLOUD CEDEX FRANCE
2	HIGH ENERGY DENSITY RSCH CTR V FORTOV G KANEL IZHORSKAY STR 13/19 MOSCOW 127412 RUSSIAN REPUBLIC
1	INGENIEURBURO DEISENROTH F DEISENROTH AUF DE HARDT 33 35 D 5204 LOHMAR 1 GERMANY
1	INST OF CHEMICAL PHYSICS S RAZORENOV 142432 CHERNOGOLOVKA MOSCOW REGION RUSSIAN REPUBLIC
7	INST FOR PROBLEMS IN MATERIALS SCIENCE S FIRSTOV B GALANOV O GRIGORIEV V KARTUZOV V KOVTUN Y MILMAN V TREFILOV 3 KRHYZHANOVSKY STR 252142 KIEV 142 UKRAINE

NO. OF COPIES	ORGANIZATION
1	INST FOR PROBLEMS OF STRENGTH G STEPANOV TIMIRY AZEVSKAYA STR 2 252014 KIEV UKRAINE
3	INST OF MECH ENGR PROBLEMS V BULATOV D INDEITSEV Y MESCHERYAKOV BOLSHOY 61 VO ST PETERSBURG 199178 RUSSIAN REPUBLIC
2	IOFFE PHYSICO TECH INST E DROBYSHEVSKI A KOZHUSHKO ST PETERSBURG 194021 RUSSIAN REPUBLIC
1	K&W THUN W LANZ ALLMENDSSTRASSE 86 CH 3602 THUN SWITZERLAND
1	R OGORKIEWICZ 18 TEMPLE SHEEN LONDON SW 14 7RP UNITED KINGDOM
1	MAX PLANCK INSTITUT FUR EISENFORSCHUNG GMBH C DERDER MAX PLANCK STRASSE 1 40237 DUSSELDORF GERMANY
2	NATL DEFENCE HDQRTRS PMO MRCV MAJ PACEY PMO LAV A HODAK OTTOWA ONTARIO KIA OK2 CANADA

NO. OF COPIES	ORGANIZATION
1	OTO BREDA M GUALCO VIA VALDIOCCHI 15 I 19136 LA SPEZIA ITALY
5	RAPHAEL BALLISTICS CTR M MAYSELESS Y PARTOM G ROSENBERG Z ROSENBERG Y YESHURUN BOX 2250 HAIFA 31021 ISRAEL
1	ROYAL MILITARY ACADEMY E CELENS RENAISSANCE AVE 30 B 1040 BRUSSELS BELGIUM
1	ROYAL NETHERLANDS ARMY J HOENEVELD V D BURCHLAAN 31 PO BOX 90822 2509 LS THE HAGUE NETHERLANDS
1	DEFENCE MATERIEL ADMIN WEAPONS DIRECTORATE A BERG S 11588 STOCKHOLM SWEDEN
2	SWEDISH DEFENCE RSCH ESTAB DIVISION OF MATERIALS S J SAVAGE J ERIKSON S 172 90 STOCKHOLM SWEDEN

NO. OF COPIES	ORGANIZATION
3	SWEDISH DEFENCE RSCH ESTAB L HOLMBERG B JANZON P LUNDBERG BOX 551 S 147 25 TUMBA SWEDEN
1	TECHNION INST OF TECH FACULTY OF MECH ENGINEERING S BODNER TECHNION CITY HAIFA 32000 ISRAEL
3	TECHNISCHE UNIVERSITAT CHEMNITZ ZWICKAU A SCHROEDTER L KRUEGER L MEYER POSTFACH D 09107 CHEMINITZ GERMANY
2	TNO PRINS MAURITS LAB H PESKES R IJSSELSTEIN LANGE KLEIWEG 137 PO BOX 45 2280 AA RIJSWIJK THE NETHERLANDS
6	CENTRE DE RECHERCHES ET D'ETUDES D'ARCUEIL D BOUVART C COTTENNOT S JONNEAUX H ORSINI S SERROR F TARDIVAL 16 BIS AVENUE PRIEUR DE LA COTE D'OR F 94114 ARCUEIL CEDEX FRANCE

NO. OF COPIES	ORGANIZATION
1	CDR EUROPEAN RSCH OFFICE USARDSG (UK) S SAMPATH PSC 802 BOX 15 FPO AE 09499-1500

REPORT DOCUMENTATION PAGE

Form Approved
OMB No. 0704-0188

Public reporting burden for this collection of information is estimated to average 1 hour per response, including the time for reviewing instructions, searching existing data sources, gathering and maintaining the data needed, and completing and reviewing the collection of information. Send comments regarding this burden estimate or any other aspect of this collection of information, including suggestions for reducing this burden, to Washington Headquarters Services, Directorate for Information Operations and Reports, 1215 Jefferson Davis Highway, Suite 1204, Arlington, VA 22202-4302, and to the Office of Management and Budget, Paperwork Reduction Project(0704-0188), Washington, DC 20503.

1. AGENCY USE ONLY *(Leave blank)*	2. REPORT DATE	3. REPORT TYPE AND DATES COVERED
	May 2001	Final, 1998-1999

4. TITLE AND SUBTITLE
The Mechanical and Ballistic Properties of an Electron Beam Single Melt of Ti-6Al-4V Plate

5. FUNDING NUMBERS
62260DC05

6. AUTHOR(S)
Matthew Burkins, Martin Wells, John Fanning,* and Brijmohan Roopchand†

7. PERFORMING ORGANIZATION NAME(S) AND ADDRESS(ES)
U.S. Army Research Laboratory
ATTN: AMSRL-WM-TA
Aberdeen Proving Ground, MD 21005-5066

8. PERFORMING ORGANIZATION REPORT NUMBER
ARL-MR-515

9. SPONSORING/MONITORING AGENCY NAMES(S) AND ADDRESS(ES)
U.S. Army Tank-Automotive Research, Development, and Engineering Center, Warren, MI 48397

10.SPONSORING/MONITORING AGENCY REPORT NUMBER

11. SUPPLEMENTARY NOTES
* TIMET Henderson Technical Laboratory, P.O. Box 2128, Henderson, NV 89009
† U.S. Army Armament Research, Development and Engineering Center, Picatinny Arsenal, NJ 07876-5000

12a. DISTRIBUTION/AVAILABILITY STATEMENT
Approved for public release; distribution is unlimited.

12b. DISTRIBUTION CODE

13. ABSTRACT *(Maximum 200 words)*
Titanium alloys are beginning to be used in Army ground systems as a result of their unique combination of ballistic and mechanical properties. However, more widespread use has been limited by cost of both the initial plate product and fabrication. Ti-6Al-4V is the current alloy of choice for structural and appliqué armor for Army applications. Until now, virtually all of the production of this alloy has been for aircraft/aerospace applications. These products all require at least two vacuum arc melts, and for flight critical parts and all rotating components in gas turbine engines, a third melt is required. During the past several years, cold hearth melting has been used for one of the melts because this process can remove inclusions. However, while single melts of commercially pure (unalloyed) titanium for industrial uses are now being routinely produced by electron beam, cold hearth melting, there is little production of titanium alloys.

The object of this study was to evaluate an electron beam, cold hearth, single melt of Ti-6Al-4V plate for application to Army ground vehicles. Single-hearth melting would considerably reduce the cost of titanium alloy plate (and other mill products) through the use of lower cost raw materials and reduced energy consumption. The plates produced by the electron beam, cold hearth, single-melt process were ballistically equivalent to standard production Ti-6Al-4V material.

14. SUBJECT TERMS
titanium, armor, electron beam melting, ballistic properties, mechanical properties

15. NUMBER OF PAGES
41

16. PRICE CODE

17. SECURITY CLASSIFICATION OF REPORT	18. SECURITY CLASSIFICATION OF THIS PAGE	19. SECURITY CLASSIFICATION OF ABSTRACT	20. LIMITATION OF ABSTRACT
UNCLASSIFIED	UNCLASSIFIED	UNCLASSIFIED	UL

NSN 7540-01-280-5500

Standard Form 298 (Rev. 2-89)
Prescribed by ANSI Std. 239-18 298-102

INTENTIONALLY LEFT BLANK.

USER EVALUATION SHEET/CHANGE OF ADDRESS

This Laboratory undertakes a continuing effort to improve the quality of the reports it publishes. Your comments/answers to the items/questions below will aid us in our efforts.

1. ARL Report Number/Author ARL-MR-515 (Burkins) Date of Report May 2001

2. Date Report Received _____

3. Does this report satisfy a need? (Comment on purpose, related project, or other area of interest for which the report will be used.) _____

4. Specifically, how is the report being used? (Information source, design data, procedure, source of ideas, etc.) _____

5. Has the information in this report led to any quantitative savings as far as man-hours or dollars saved, operating costs avoided, or efficiencies achieved, etc? If so, please elaborate. _____

6. General Comments. What do you think should be changed to improve future reports? (Indicate changes to organization, technical content, format, etc.) _____

CURRENT ADDRESS

Organization

Name E-mail Name

Street or P.O. Box No.

City, State, Zip Code

7. If indicating a Change of Address or Address Correction, please provide the Current or Correct address above and the Old or Incorrect address below.

OLD ADDRESS

Organization

Name

Street or P.O. Box No.

City, State, Zip Code

(Remove this sheet, fold as indicated, tape closed, and mail.)

(DO NOT STAPLE)