061126

JPRS-EST-86-024

26 SEPTEMBER 1986

DISTRIBUTION STATEMENT A
Approved for public release;
Distribution Unlimited

Europe Report

SCIENCE AND TECHNOLOGY

DTIC QUALITY INSPECTED 2

19980727 217

FBIS FOREIGN BROADCAST INFORMATION SERVICE

REPRODUCED BY
U.S. DEPARTMENT OF COMMERCE
NATIONAL TECHNICAL
INFORMATION SERVICE
SPRINGFIELD, VA. 22161

16
106
A06

NOTE

JPRS publications contain information primarily from foreign newspapers, periodicals and books, but also from news agency transmissions and broadcasts. Materials from foreign-language sources are translated; those from English-language sources are transcribed or reprinted, with the original phrasing and other characteristics retained.

Headlines, editorial reports, and material enclosed in brackets [] are supplied by JPRS. Processing indicators such as [Text] or [Excerpt] in the first line of each item, or following the last line of a brief, indicate how the original information was processed. Where no processing indicator is given, the information was summarized or extracted.

Unfamiliar names rendered phonetically or transliterated are enclosed in parentheses. Words or names preceded by a question mark and enclosed in parentheses were not clear in the original but have been supplied as appropriate in context. Other unattributed parenthetical notes within the body of an item originate with the source. Times within items are as given by source.

The contents of this publication in no way represent the policies, views or attitudes of the U.S. Government.

PROCUREMENT OF PUBLICATIONS

JPRS publications may be ordered from the National Technical Information Service, Springfield, Virginia 22161. In ordering, it is recommended that the JPRS number, title, date and author, if applicable, of publication be cited.

Current JPRS publications are announced in Government Reports Announcements issued semi-monthly by the National Technical Information Service, and are listed in the Monthly Catalog of U.S. Government Publications issued by the Superintendent of Documents, U.S. Government Printing Office, Washington, D.C. 20402.

Correspondence pertaining to matters other than procurement may be addressed to Joint Publications Research Service, 1000 North Glebe Road, Arlington, Virginia 22201.

JPRS-EST-86-024

26 SEPTEMBER 1986

EUROPE REPORT

SCIENCE AND TECHNOLOGY

WEST EUROPE

AEROSPACE

Italy To Fund Columbus, Ariane Research
(FRANKFURTER ALLGEMEINE ZEITUNG, 13 Aug 86) 1

AUTOMOBILE INDUSTRY

Daimler, BMW of FRG Work on Hydrogen-Powered Auto
(Josef Hess; HANDELSBLATT, 5 Aug 86) 3

VDT Transmission System Set for Mass Production
(ANP NEWS BULLETIN, 21 Aug 86) 6

CIVIL AVIATION

Briefs
Fokker Seeks U.S. Production Unit 7

COMPUTERS

Activities of FRG's Largest Systems Analysis, Testing Center
(HANDELSBLATT, 5 Jun 86) 8

Siemens Corporate R&D Structure
(FRANKFURTER ZEITUNG/BLICK DURCH DIE WIRTSCHAFT, 6 Jun 86) 10

Briefs
Bull Air Research 12

MICROELECTRONICS

Thomson of France Steps Up Application-Specific IC Work
(MINIS ET MICROS, 23 Jun 86) 13

Competition Drives Recruiting Strategy at France's Thomson
(ELECTRONIQUE INDUSTRIELLE, 1 Jun 86) 16

Briefs
Dutch-Japanese Joint Venture 18
FRG X-ray Lithography 18

EAST EUROPE

LASERS, SENSORS, AND OPTICS

Significance, Prospects of Optoelectronics Discussed
(Klaus Thiessen Interview; URANIA, No 6, Jun 86) 19

MICROELECTRONICS

New Application Potential of Commodore 64 Plus Uniport
(Laszlo Bansaghi; MAGYAR ELEKTRONIKA, No 3, 1986) 23

Hungary's TXC-2000 Telexcomputer
(MAGYAR ELEKTRONIKA, No 3, 1986) 24

Possibilities, Tasks of Hungarian Telecommunications Industry
(Frigyes Berecz; MAGYAR ELEKTRONIKA, No 3, 1986) 27

Development of Hungarian Telecommunications Network
(Gabor Jako; MAGYAR ELEKTRONIKA, No 3, 1986) 30

LOTRIMOS: System for Improving Telephone Network Efficiency
(Peter Eisler; MAGYAR ELEKTRONIKA, No 3, 1986) 47

Text Communications Services Plans Seventh 5-Year Plan
(Ivan Feczko; MAGYAR ELEKTRONIKA, No 3, 1986) 61

Hungarian Automatic Testing Equipment for Soviet TV
(Peter Mahr; MAGYAR ELEKTRONIKA, No 3, 1986) 66

SZAMALK Official on Lack of Communications
(Zoltan Huba Interview; MAGYAR ELEKTRONIKA, No 3, 1986) ... 77

Professor Kalman Tarnay Interviewed on Microelectronics Training
(MAGYAR ELEKTRONIKA, No 3, 1986) 79

Table of Contents of MAGYAR ELEKTRONIKA
(MAGYAR ELEKTRONIKA, No 3, 1986) 81

SCIENTIFIC AND INDUSTRIAL POLICY

Polish Council of Ministers' Order on S&T Funding
(DZIENNIK USTAW, No 18, 12 May 86) 84

GDR University Research Coordinated With Industry
(Karla Schroeder; NEUES DEUTSCHLAND, 5-6 Jul 86) 91

LEIPZIGER VOLKZEITUNG Interview With Soviet Nuclear Scientist (Georgiy Flyorov Interview; LEIPZIGER VOLKZEITUNG, 14-15 Jun 86) 93

Director Discusses GDR Machine Tool Research Center (Peter Ulrich Interview; TRIBUENE, 13 Jun 86) 96

/9987

WEST EUROPE/AEROSPACE

ITALY TO FUND COLUMBUS, ARIANE RESEARCH

Frankfurt/Main FRANKFURTER ALLGEMEINE ZEITUNG in German 13 Aug 86 p 24

[Article: "More Money for Italian Spaceflight. One Milliard (Billion) Marks Annually. Rockets and Research Satellites"]

[Text] Italy intends to spend substantially more money on spaceflight in the future. Expenditures of one milliard (billion) marks per year are planned until 1992. The space budget is currently 900 million. The additional expenditures are necessary primarily for Italy's participation in Columbus--the European contribution to America's space station--and in the Ariane 5 project. Moreover, to better coordinate the projects, the Italian government intends to establish a national space agency by the end of the year which is to employ 150 to 200 people.

If the government's suggestions are accepted, in the future Italy will spend equal amounts of money on European and national space projects. The European projects primarily involve Columbus and the Ariane 5. Italy's own projects on the other hand deal with the development of satellites, even though individual projects may involve joint efforts with foreign partners. The first of five Italian satellites to date was launched into space as early as 1964 from America's Wallops Island launch pad. Italy has its own launch pad, however, for high-altitude research rockets. The American astronomical satellite Uhuru was launched from this floating San Marco pad off the coast of Kenya in 1970.

Among other things the Italians are currently working on a so-called captive satellite which is to be lowered from the Space Shuttle on an approximately 100-km-long tether and then later retrieved. The satellite can thus spend several days making atmospheric, ionospheric and electromagnetic measurements at an altitude of 100 to 150 km. A free-flying satellite traveling so low would fall back to earth within one orbit because of the still considerable effects of air resistance at that altitude. Another research satellite which Italy intends to build together with the Netherlands is the x-ray astronomy satellite called "Sax" (Satellite Astronomia X).

For satellite launches from the shuttle the Italians are developing their own rocket, the "Iris" (Italian Research Interim Stage). According to AVIATION WEEK AND SPACE TECHNOLOGY, Iris is supposed to place 600 to 900 kg satellites into a geostationary orbit 36,000 km above the earth. The first satellite

that Iris is supposed to launch is the geodetic satellite, Lageos 2, which like its predecessor, Lageos 1, was built by Aeritalia. Nasa's Lageos 1 satellite has been orbiting the earth since 1976. On its surface it has 426 prisms which reflect laser beams aimed at it from ground stations. The data thus obtained is used to determine the movement of the plates of the earth's crust.

12552
CSO: 3698/650

WEST EUROPE/AUTOMOBILE INDUSTRY

DAIMLER, BMW OF FRG WORK ON HYDROGEN-POWERED AUTO

Duesseldorf HANDELSBLATT in German 5 Aug 86 p 13

[Article by Josef Hess: "Daimler and BMW Following Different Paths"]

[Text] HANDELSBLATT, Monday, 4 Aug 1986, Duesseldorf--Will the next generation, or at the latest the next generation after that, be driving cars fueled with hydrogen instead of gasoline or diesel? Many participants at the just concluded International Hydrogen Energy Conference in Vienna answer in the affirmative even though fuel prices are currently at a low point and "white gold" (crude oil), appears to be available in abundant quantities. The two German producers of luxury cars, Daimler-Benz and BMW, in any case are gearing up over the long term for the "hydrogen age."

In contrast to electric cars in which "lead" (in the truest sense of the word) batteries with relatively low capacity--technical experts talk of low energy density per weight unit--permit only a limited range of travel and miserably low acceleration values and peaks and, moreover, in which the battery is ready for the junk heap after a limited number of recharging cycles, hydrogen guarantees driving performance like that of gasoline-powered cars. Only the range is still a problem.

If in the future--sometime after the year 2000--hydrogen cars have to be used in greater numbers in order to save gas, a special infrastructure will be necessary, e.g. giant electrolysis plants for obtaining hydrogen (and oxygen) from water, as well as a corresponding distribution network. Even more electrical energy than has been required to date would be necessary to operate the electrolysis plants.

In Vienna, Daimler-Benz was already able to offer an interim report on its experiences with a fleet of 10 experimental vehicles in a test which began in October 1984 and will run until the end of this year in Berlin and which instead of a "tiger" in the tank have hydrogen. This hydrogen is adsorbed by the metals titanium, vanadium and manganese to form hydrides and is transferred to the engine from such a metal hydride tank. Two Mercedes models are in use: a van with a 2.3 liter, four-cylinder, 102 hp engine and a 280 TE station wagon with a six-cylinder, 163 hp engine. The highest speeds achieved are 130 to 185 km/h or about the same as with a gasoline-powered engine. Only the range, at 120 to 150 km, is still too limited. And also the fill-up time

of 10 minutes needed to fill the tank which is then only 80% full, must be considerably shortened, in Daimler's view as well, by the development of a completely new fill-up technique. Nevertheless, after a two-year fleet experiment over about 160,000 km driven, the Stuttgart company is striking a positive balance overall. According to them the problems which developed were not all too great.

BMW in Vienna offered an entirely different technology for hydrogen storage as well as for the engines themselves. The Munich company has joined with the renowned DFVLR (German Research and Testing Institute for Aviation and Spaceflight) in Stuttgart to develop a hydrogen-powered car and has converted two 745i's with the option of running on either hydrogen or gasoline. In contrast to Daimler, the DFVLR and BMW have chosen to store (supercooled) liquid hydrogen in a double-walled, vacuum-insulated cryogenic container with exhaust-cooled super insulation which in the test vehicles is located in the trunk. The evaporation rate in the 50 and 130 liter tanks is currently less than two percent per day. Fully automatic fill-up stations permit filling of the cryogenic tank in approximately three minutes.

In addition to the type of storage, the motor concept represents a second problem area. DFVLR and BMW say that the concept of external mixture formation by warming the liquid hydrogen coming from the tank to room temperature has been "outbid" because its power output is at most just under 48 hp (35 kW) per liter of displacement. The situation is different, however, when supercooled hydrogen already in gaseous form is blown into the intake manifold where filling losses of only 10 percent occur instead of the 30 percent lost in gasoline engine operation. The disadvantage of both concepts is the danger of backfiring in the intake manifold or of pre-ignition.

This disadvantage is avoided completely by direct injection of the hydrogen after the end of the induction phase--e.g. during the compression phase. Moreover, the heat value of the mixture with such internal mixture formation is still 17 percent higher than in a gasoline-powered engine. The specific fuel consumption is favorable, and in addition emissions of nitrous oxides are negligibly small.

Electronic Conversion From Gasoline to Hydrogen Operation

The model 745i BMW-DFVLR test vehicles are equipped with a 3.5 liter, 185 kW (252 hp) turbo engine which was of course modified to run on hydrogen. A hydraulically driven piston pump right next to the tank withdraws liquid hydrogen and compresses it. A "cryogenic" tube guides the supercooled fuel to a pressure-equalizing vessel where it is already gaseous at a temperature of not less than minus 240°C. From this vessel the injectors are supplied, via a pressure reducing valve, with a constant fuel pressure for direct injection of the supercooled but gaseous hydrogen. Precise metering is performed electronically. Electronics also assist in adapting part-load throttling, supercharging pressure, ignition angle and transmission shift points, depending on whether the engine is to be driven using hydrogen or gasoline.

The test engineers at BMW and DFVLR presented a series of visual aids in Vienna. They were used to demonstrate, among other things, that hydrogen-driven vehicles can produce clearly lower figures for harmful emissions than vehicles with catalytic converters and lead-free gasoline.

Gasoline Still Alone at the Top

Two other visual aids were presented which took a probably not entirely unintentional jab at the major competition in Stuttgart. They showed that the density of energy storage was 2.1 megajoule per liter (MJ/l) for gaseous hydrogen, 4.4 MJ/l for metal hydride storage based on iron and titanium and 7.8 MJ/l for liquid hydrogen. In other words, approximately 77 percent more fuel can be stored in the same space using the liquid hydrogen method than using the metal hydride method (Daimler method). However, for both companies the hydrogen-powered car is still in its initial stages. And in any case the gasoline "tiger" in the tank still holds the top spot with 28 MJ/l in terms of energy density. And with the same tank capacity you can still drive four times farther than with liquid hydrogen. The situation with regard to gasoline and diesel would have to be pretty bleak before hydrogen would be able to be viable.

12552
CSO: 3698/650

WEST EUROPE/AUTOMOBILE INDUSTRY

VDT TRANSMISSION SYSTEM SET FOR MASS PRODUCTION

The Hague ANP NEWS BULLETIN in English 21 Aug 86 pp 4-5

[Text] Tilburg, August 20--Car transmission manufacturer Van Doorne's Transmissie (VDT) today confirmed mass production plans for its revolutionary gear change system were on schedule and said cars fitted with the new system could be on the market by the end of the year.

The company said it would switch next month from laboratory to technical production of metal v-belts--the vital component of its continuous shift variable transmission system--although mass production could only be fully realised by end 1987.

VDT director P. de Bruin said it was up to company clients to decide when the first models fitted with the new gear shift would appear on the market, but said it was 'not unlikely' these would start selling this year.

From September, VDT would continually expand production by adapting machinery and streamlining production methods, De Bruin said.

The company has in the past repeatedly hit snags in moving from the development stage to mass production and shareholders agreed late last year that unless VDT adhered to a strict timetable to start manufacture it would lose production rights.

Shareholders Fiat, Volvo and the Company for Industrial Projects (MIP) at the time of the agreement pumped an additional 50 million guilders into the company.

Fiat has a 24 percent stake in VDT, Volvo 27 percent and MIP, an independently operating venture capital fund, holds a majority 49 percent stake.

/9317
CSO: 3698/685

WEST EUROPE/CIVIL AVIATION

BRIEFS

FOKKER SEEKS U.S. PRODUCTION UNIT--The Hague, July 16--Dutch aircraft maker Fokker is considering setting up or acquiring production facilities in the United States, company chairman Frans Swarttouw said in a newspaper interview published today. Swarttouw told Het Financieele Dagblad that production facilities in the U.S. would enable the Dutch company to respond better to any large-scale orders placed by U.S. airlines. Fokker said in June that it was negotiating several large sales of its F-100 airliner which is due to enter service next year. Recent Dutch press reports have said that American Airlines of the U.S. is considering an order for 100 of the 100-seat jetliners. Swarttouw stressed that establishment of a U.S. production unit was a long-term goal and that the company had no hard and fast plans as yet. Fokker would prefer to acquire an existing plant rather than start from scratch, but so far everything the company had looked at had been in 'rather a disastrous state,' he told the newspaper. [Text] [The Hague ANP NEWS BULLETIN in English 17 Jul 86 p 5] /9317

CSO: 3698/685

WEST EUROPE/COMPUTERS

ACTIVITIES OF FRG'S LARGEST SYSTEMS ANALYSIS, TESTING CENTER

Duesseldorf HANDELSBLATT in German 5 Jun 86 p 14

[Article under the "Enterprises and Markets" rubric: "Strauss: After 25 Years in Operation the Largest Systems Analysis and Testing Center--IABG/IVG Subsidiary Made a Small Profit in the Last Business Year"; first paragraph is HANDELSBLATT introduction]

[Text] Munich, 4 Jun 86--Within 25 years, the Industrial Plant Operating Company (IABG) mbH in Munich, part of the federally-owned IVG concern, has developed into the largest systems analysis and testing center, declared Bavaria's Prime Minister Franz Josef Strauss in his jubilee speech.

The service enterprise IABG tests not only the European rocket Ariane before launch but likewise subjects the combat aircraft "Tornado" and the "Airbus" to a hardness test.

At the initiative of the Federal Defense Ministry and the German aeronautical and space industry, the IVG subsidiary was founded, which prepares planning and decision aid for public and private contracting authorities. It thereby attaches great importance to "neutrality and independence" in its expertise. Both are also to be ensured through a partial conversion to private ownership of the IVG concern.

The IABG also operates the magnetic rail experimental system in Emsland for the MVP Experimental and Planning Company for Magnetic Rail Systems mbH. With its more than 1,700 employees, it was able to increase its sales by 11.2 percent in 1985 to DM236.8 million. Of this amount, DM221.5 million were for services. The bottom line was a profit of DM1.2 million (1.6 million the previous year). The investments increased to DM8.3 (5.7) million, which is somewhat more than the almost DM8 (4.8) million in depreciation.

Naturally the federal government is still the largest customer but in recent years the "third-party business" with industry has continuously increased, so that its share now amounts to 26 percent. In 1979, the share of industrial customers in total sales was only 13 percent. The IABG supports its customers through studies and technical analyses and simulations.

Thus the reliability of all German satellites under simulated launch and space-mission conditions was tested at the IABG facilities in Munich-Ottobrunn. There is close cooperation with the neighboring largest German aeronautical and space company MBB, which extends to tests of material fatigue on aircraft, for example.

That profits declined somewhat in 1985 is attributable not least to the fact that the special depreciation for research and development investment was increased from DM0.5 million to DM3 million. In addition, the IABG expended DM4 million of its own resources in 1985 for the improvement of procedures and methods within the scope of its measures to provide for the future.

9746
CSO: 3698/578

WEST EUROPE/COMPUTERS

SIEMENS CORPORATE R&D STRUCTURE

Frankfurt/Main FRANKFURTER ZEITUNG/BLICK DURCH DIE WIRTSCHAFT in German 6 Jun 86 p 7

[Article: "Siemens Wants to Develop New Base Technologies: 36,000 Employees in Research and Development/1 Out of Every 10 Marks Is a Research Expenditure"]

[Text] Munich--Since the time when Werner von Siemens had the pointer telegraph patented and discovered the dynamo-electric principle, the enterprise founded by him has contributed to progress in electrical engineering and eletronics through an uninterrupted chain of innovations. For Siemens AG, research and development are a decisive basis for enterprise action. Its weight is correspondingly high, both internally and in relation to the environment.

The enterprise curently employs about 36,000 people in research and development and it is expected that DM5.5 billion may be spent on it during the current business year. Thus approximately 10 percent of its overall activities in terms of the number of employees and sales are for this field of work. The absolute numbers stamp Siemens as probably the largest European research and development enterprise. In this connection, the enterprise saw itself in third place internationally a while back. Approximately 1 out of every 10 marks that in the FRG [section of text missing]...also the elaboration of new production technologies, especially now that electronics is playing an ever greater role in process automation. There is also the development of implements and tools. A larger share of the overall budget of DM800 million goes for this task than for basic development. All of this work is currently aimed primarily at four areas of appliation: the office of the future, the factory of the future, the information and communications networks of the future, and finally semiconductor technology as an overlapping key technology. Even development fields of undiminished importance such as medical or energy technology recede in the background in comparison.

Among the important tasks of the central area for research and development is the coordination of the uncommonly broad development activities. Initially that means the coordination of one's own work and the different enterprise areas from which a large part of the orders and money comes. The management of research and development is especially [section of text

missing]....According to Prof Karl Heinz Beckurts, board member and chief of the central area for research and development, such cooperation affects less than 10 percent of the total development potential.

Cooperation with the universities, however, is being greatly expanded after the reduction of the previous fear of contact between the universities and the economy. Siemens spends about DM50 million annually for this cooperation. Behind this is a long-term concept that beyond the mutual advantages of a joint utilization of the technical and scientific potential does not, in the view of Siemens, disregard the fact that in this way students of the relevant subjects become familiar with and accustomed to the equipment and systems of the large German eletrical enterprise early. That facilitates not only the recruiting of the coveted young scientists but also advances the degree of familiarity with its own products even prior to extensive marketing.

9746
CSO: 3698/578

WEST EUROPE/COMPUTERS

BRIEFS

BULL AIR RESEARCH--Bull's artificial intelligence strategy, including the Louveciennes research center where an "Artificial Intelligence" department was created in 1982, and the "Artificial Intelligence Mission" launched in November 1984 with Alice Recoque as mission leader, might well lead soon to a consistent line of artificial intelligence languages such as Lisp or Prolog, on the BM 30/60 and SPS 7/9, and expert system development tools. At the ECRC, the Bull/Siemens/ICL joint research center, Bull is also working on several projects of artificial intelligence machines, and it is participating in several AI-related ESPRIT projects. For the time being, the research done by the AI Mission have led to the creation of the CEDIAG in August (Expertise and Development Center for Group Artificial Intelligence). Subjects under development and likely to lead to products are, to name a few, Xlog, a Prolog interpreter for the Bull Micral; Boum, an expert system generator written in Le-Lisp; Kool, an object-oriented description language designed for expert system development, which is also based on Le-Lisp. Internally, Bull is working on Noemie, a computer-configuration expert system which should interactively help users prepare proposals for valid configurations and is being developed on SPS9, using Kool; and finally Diag, a maintenance expert system initially used for the MSU 452 diskette inventory. The manufacturer hopes to place full-scale versions of these expert systems in service during 1987. [Text] [Paris ELECTRONIQUE INDUSTRIELLE in French 1 Jun 86 p 129] 9294

CSO: 3698/668

WEST EUROPE/MICROELECTRONICS

THOMSON OF FRANCE STEPS UP APPLICATION-SPECIFIC IC WORK

Paris MINIS ET MICROS in French 23 Jun 86 pp 15-16

[Article signed R.C.: "Thomson Semiconductors: From Components to VME Cards in the Grenoble Area"]

[Text] A one-day visit at Thomson Semiconductors is hard work because there is so much information to gather. True, our national manufacturer covers the whole range, from components to cards (G64 and VME [Versa Module Eurocard]) for nearly all application fields, especially in the industry.

The first thing that struck us during our visit to Grenoble was that Thomson Semiconductors is returning to basics with the creation of a new division called "Thomson Asic"; the company thus returns to the field that was at the origin of the creation of EFCIS. Indeed, the latter company started by making custom circuits.

Today, Thomson Asic, with the benefit of Mostek's contribution (Mostek was taken over by Thomson last year), is covering the whole range of customizable circuits for analog or digital applications. The division even manufactures mask-programmable filters, which is not very common.

Something New for ASICs

From the start of his presentation, Zenyk Horbowy, manager of ASIC operations, stressed the fact that all Mostek and Thomson technologies will soon be perfectly compatible so that their customers will actually have a dual source on both sides of the Atlantic. Gate arrays and standard cells are made in two technologies, both of them in high-density CMOS. The former uses a 3-micron geometry with a single layer of metal; the latter uses a 2-micron geometry, with double metallization.

The gate array line consists of 4 models in the first technology, ranging from 360 to nearly 1,500 gates, and half a dozen models in the second technology, from 1,100 to nearly 10,000 gates. The multigate products are still used only by the military. Gate arrays are referenced (it is a new name) TSGA xxxx (number of gates) for the first category, and TSGC (xxxx) for the second.

Standard cells also come in two families; one, called TSGSM, is made in 4-5 micron technology, with single-layer metallization, but it may combine analog and digital functions on the same chip; the other, brand new, is called TSGSB (2 micron, double metallization) and is compatible with TSGB-type gate arrays.

As could be observed, the TSGSM series uses a relatively coarse geometry imposed in practice by the difficulty of mixing analog and digital technologies. The advantage resides in the fact that this technology has been mastered and that it subsequently reduces the risk of failure. The library of analog functions is continuously developed, but it already includes many functions: amplifiers, comparators, voltage references devices, oscillators, A/N 8 or 16-bit converters, programmable attenuators, etc. As for the library of digital functions, it includes all the traditional combinatorial and sequential functions.

For the time being, all TSGSM-series circuits are designed by Thomson, and the libraries are not yet transferred to customers. This should change by the end of the year, when the libraries will become available to customers requiring them. But we should point out that analog technology is far more difficult to master than digital technology.

The TSGSB series, introduced quite recently, is manufactured with the same technology as TSGB gate arrays (dual-well process with propagation time of 1.4 ns, bidirectional I/Os supporting up to 4 mA, etc.). However, it offers high level functions, like memories (RAM or ROM), PLAs and, in the future, "Megacells" like the core of microprocessors, peripherals, etc.

Development Resources

As is known, for customizable circuits, the design and development tools available to users are particularly important. The trend today is still to entrust this job to the semiconductor manufacturers themselves, especially when they are small or medium-size businesses. As a result, Thomson has design centers in most industrialized countries, in particular, for France, at Velizy (near Paris) and soon in Grenoble.

However, semiconductor manufacturers do not usually consider this job as part of their traditional activities. They would like customers to take care of the design themselve or to entrust it to independent companies, like Maxcell Design (in the Paris area), South System (Toulouse area) or Sorep (in Brittany), which have been approved by Thomson for its ASICs.

Customers who want to develop their own circuits have three options: either do it on their own premises and with their own tools, in particular work stations of the Daisy, Mentor or Valid types (in alphabetical order) for which libraries are available; connect themselves to the Thomson Vax (itself connected to Mostek's hardware in the United States); or, finally, go to the manufacturer's design centers where training classes are also given.

In short, as can be seen, Thomson is getting fully involved in the ASIC battle, and its experience of custom circuits plus Mostek's contribution certainly represent worthwhile assets that it would be a pity to waste. For

the time being, their battle horse is naturally the 2-micron technology with double metallization, but they are already working on 1.25-micron geometries which should be introduced next year. These will be directly compatible with today's geometries, but will of course make it possible to integrate still more complex functions.

VME Cards

We shall certainly have an opportunity to come back another time to microprocessors, memories and other telecommunication components. The most important novelty in this field is, we believe, the digital signal processor which we discuss briefly in a boxed insert [not reproduced].

If we decided to mention the cards, it is because the manufacturer's involvement in this field is well known (we have already mentioned it in the past, but it now materializes with the introduction of several novelties).

No less than 10 cards or so were introduced on the market during June. They are naturally in the VME format which Thomson was one of the first to adopt. Among these new cards, we should mention in particular two 68010-based central units, one running under Unix (TSVME 102) and the other (TSVME 103) intended for real-time industrial applications. We should also mention an IEEE 488 bus controller, interface cards and memory cards which we shall further discuss in the "New Products" column.

The distribution network marketing these cards in France has been entirely reorganized. Tekelec Airtronic is now the spearhead company in marketing these products. The distributor had to part with Force Computer (now marketed by A2M) for understandable reasons of competition among suppliers. The distribution network is completed by Silec, which brings to about 20 the number of Thomson cards points of sale.

With this new organization, the distribution network could claim 70-80 percent of French sales, which will represent about 40 percent of all card sales. The foreign network is also being developed, with new facilities in Great-Britain, Germany, Switzerland (Modulator company in Berne), etc.

9294
CSO: 3698/668

WEST EUROPE/MICROELECTRONICS

COMPETITION DRIVES RECRUITING STRATEGY AT FRANCE'S THOMSON

Paris ELECTRONIQUE INDUSTRIELLE in French 1 Jun 86 p 127

[Article signed E.F.: "Thomson Components: An Ambitious but Realistic Recruiting Program"]

[Text] To bridge the gap between its staff size and its current projects, Thomson Components launched a very aggressive recruiting policy a few months ago; it involves mostly France. Actually,the company wishes to increase the number of its cadres at the rate of 150 to 200 engineers per year until 1990. It is thus proposing to hire many of the engineers graduating from French schools specialized in electronics; they number about 900 every year.

Since a number of vacant positions already require some experience, and therefore skills that could be acquired only at competing companies, in France or abroad, Thomson is waging an international battle. For that purpose, new structures have emerged within the company during the past two years, in particular in departments directly in charge of the "personnel function."

Cadre jobs are changing, and the importance of an individual's human relations skills are becoming obvious. "A diploma is no longer the only passport."

The same is true of the recruiter's job; he must be able to rely on structures capable of providing job descriptions for recruiting as well as for transfers and promotions. This is a very difficult context, subject to keen competition, as all companies are targeting the same people: "good" engineers can therefore pick and choose. In addition, since recruiters are not allowed (or cannot afford) to make mistakes, selection criteria are severe, and if there is any doubt about an applicant, that applicant is a priori and preferably turned down.

This is unfortunate because, in our opinion, a grain of insight should enable recruiters to detect underlying abilities. Indeed, the success of any recruiting policy also requires improved interpersonal communication and mutual understanding between the applicant and the recruiter.

The diversity of positions that Thomson Components can now offer is obviously one of the company's strong points; but it requires from the applicants a geographic mobility which may not have become the custom yet. Geographic

mobility is mandatory, especially considering the growth of the company and the development prospects it offers.

Although a diploma is no longer the major selection criteria for trained specialists, beginners are preferably recruited from the best engineering schools (Polytechnique, Centrale, ENST, ESAM, Supelec, etc.) and also, but to a much lesser extent, among third-cycle university graduates.

However, there are still fewer engineers trained each year than are needed by companies in the electronic and data-processing fields. According to Thomson Components, companies could play an important part in the schools, in organizing the course of studies, with more widespread use of training periods, especially longer ones, and including training periods abroad.

With the method used in France by over 200 companies, including Thomson Components, to analyze and classify cadre positions (Hay method), it is possible to evaluate each position and determine its "weight" in the system as a whole. As part of a human resource strategy, this method is an element of communication, clarification and objectivization as well as an appreciable data base. In particular, it makes it possible to set up a new human resource management policy, at individual level and geared to performance, through a series of evaluation procedures between each cadre and his direct supervisor.

Promoting communication (meetings, training for "day-to-day" management) implementing a culture common to the Components branch (organizing joint efforts among the different centers) and helping cadres to better use modern methods of personnel management (evaluation, reflection on strategy, etc.), these are the company's three priority objectives, the main goal being to work out a structural and human plan designed to ensure the company's success in the international competition.

9294
CSO: 3698/668

WEST EUROPE/MICROELECTRONICS

BRIEFS

DUTCH-JAPANESE JOINT VENTURE--Eindhoven, August 20--Dutch electronics multinational Philips today announced the establishment of a new company for the production and sale of ceramic electronic components, in a joint venture with the Nippon Chemi-Con Corporation and the Nippon Steel Corporation. The three companies unveiled plans for the new firm, called the PNN Corporation, in March this year. PNN is based in Kamaishi-Shi, Japan, and will become operational in the course of next year. It will employ about 140 people and will initially produce ceramic multilayer capacitors. The initial production capacity will be one billion pieces a year. Philips, which holds a 40 percent stake in the new company, provided much of its production and process technology. Nippon Chemi-Con and Nippon Steel each hold 30 percent of PNN's 1.5 billion-yen share capital. [Text] [The Hague ANP NEWS BULLETIN in English 21 Aug 86 p 2] /9317

FRG X-RAY LITHOGRAPHY--Submicron lithography might well use X-ray sources sooner than expected. Many experts were forecasting their introduction for 1990, but the first systems are already appearing. At the West German Cosy MicroTec company, for instance, whose storage ring associated to a Karl Suess photorepeater will be tested at the West Berlin Fraunhofer Institute already at the end of 1986. Cosy MicroTec also intends to offer a 2 m x 4 m synchotron by 1988. The synchrotron will provide a 12-angstrom radiation at an energy level of 630 MeV. Cost: $8 million. [Text] [Paris INDUSTRIES ET TECHNIQUES in French 10 Jun 86 p 8] 9294

CSO: 3698/668

EAST EUROPE/LASERS, SENSORS, AND OPTICS

SIGNIFICANCE, PROSPECTS OF OPTOELECTRONICS DISCUSSED

Leipzig URANIA in German No 6, Jun 86 pp 20-23

[Interview with Prof Dr Klaus Thiessen, assistant director of the Central Institute for Optics and Spectroscopy of the GDR Academy of Sciences, by B. Wolter and E. Dahlke; date and place not specified; first paragraph is boxed material and the next two paragraphs are URANIA introduction]

[Text] Our interview partner: Prof Dr Klaus Thiessen, 58, is assistant director of the Central Institute for Optics and Spectroscopy of the GGR Academy of Sciences. Following his study of physics and graduation in the Soviet Union, he worked at the Academy of Sciences. After that, he was research director at the Television Electronics Works in Berlin. He has been back at the academy since 1981 and teaches at Karl-Marx-Stadt Technical College. In 1980, he received the National Prize of the GDR for Science and Technology. His specialty: optoelectronic componenents.

On the occasion of the 11th SED Congress, the Central Institute for Optics and Spectroscopy of the GDR Academy of Sciences was distinguished with a banner of honor of the SED Central Committee. In the presentation, Prof H. Hoernig, chief of the sciences section of the Central Committee, praised the work of the researchers, who with their projects stand on the front lines of science and technology.

We asked Prof Dr Klaus Thiessen, assistant institute director, about the importance and prospects of optoelectronics as a modern key technology.

[Answer] As you know, optoelectronic components serve in the conversion of electric into optical signals and vice versa or they utilize a combination of this converter function. In this sense, they are applied on the periphery of a microlectronics that processes exclusively electronic signals, whereby they are used increasingly--especially in recent years--in the transmission of information. The result is that up-to-date microelectronics is as good or as bad as the elements of the input or output of information into the microelectronic systems or equipment. There are various possibilities for the interaction of the electronics with the person or the machine--mechanical with the help of keyboard, for example, acoustical by means of a microphone, or optical. The latter seems to me to be especially important and promising. I am thereby thinking about the universal use of the television camera, for

example, but also about up-to-date robot control, which increasingly takes place through optical sensors. Fortunately, these "eyes" can be realized exclusively on the basis of silicon sensors, that is, precisely with the material and the technologies that play the main role in microelectronics.

Often, to be sure, one also needs sensors that can "see" infrared radiation. Today that too can be accomplished with modern semiconductor materials--with indium antimonide or cadmium/mercury telluride as a photoresistor, for example.

These few examples alone show that the optoelectronic elements must be very versatile with respect to their adaptability to man or machine--in contrast to the microelectronic circuits or memories that can be produced in millions of identical components. Optoelectronic components must, for example, always be adapted to a certain light band or to a certain configuration with respect to the arrangement of the test object. That involves a great abundance of different components, materials and processing technologies, which represents an extraordinary challenge for the researcher and developer.

[Question] You have accepted this challenge. What are you relying on?

[Answer] We in the GDR found very good preconditions when we began to promote modern optoelectronics intensively about 15 years ago. That is because shortly after World War II the VEB Television Electronic Works in Berlin, as a Soviet-German stock company, included a substantial volume of optoelectronic components in its production. Here it should be mentioned that the Television Electronics Works was the very first enterprise on the European continent to begin the series production of television picture tubes, indeed in 1951 with substantial support by the Soviet Union. The well-known gas discharge numerical indicator tubes were also produced in a large volume at the Television Electronics Works. That is, the optoelectronic operations of the GDR--one could say the sole producer--has decades of experience in the area of optoelectronics.

We also have longstanding traditions in research, in the institutions of the Academy of Sciences and of the colleges and universities, so that here as well the preconditions were good and meanwhile are very good for the development of optoelectronic components and their technologies. Here mention should be made in particular of Humboldt University in Berlin, which immediately after its reopening also applied optoelectronic methods above all in the investigation of the properties of semiconductors, initially not even with the goal of developing components. Karl Marx University in Leipzig has carried out pioneer work in the area of the III-V-compounds in particular.

The institutes of the Academy of Sciences in Berlin, the present Central Institute for Electron Physics and the Central Institute for Optics and Spectroscopy, have both carried out optoelectronic research for decades that is recognized in the world, also in very close cooperation with the research institutions of the USSR since the 1960's, above all in Moscow, Leningrad and Kiev. And on such a foundation of experiences and cooperation with the USSR,

one could naturally expect great accomplishments. To be sure, the requirements have naturally become greater and greater and we must always face up to the latest findings.

[Question] Which developments are worthy of special attention?

[Answer] Electronic equipment and especially consumer goods are now unthinkable without light-emitting diodes. Everyone is familiar with the shining red, orange, yellow or green diodes and indicator components that are used with great efficiency and a practically unlimited working life. The advantage of these light-emitting diodes is in the fact that they are exactly suited to the rest of microelectronics both in regard to the voltage level and the consumption of current and naturally reliability as well.

Exclusively the so-called p-n junctions are used for the technical realization of these components, because the effect is thereby the greatest. That is, two different areas must be realized in the involved semiconductor. The one area in this semiconductor from elements of the third and fifth groups of the periodic system must be provided with an element of the second group. As a rule, that is zink. This produces the p-type conduction. And the other area must be provided with an element of the sixth group of the periodic system. As a rule, that is tellurium or sulfur. That then produces the n-type conduction. Charge carriers are injected through these barriers and they then recombine. A portion of the energy thereby released is emitted in the form of photons (light quanta). Depending upon the semiconductor, the emission (a very narrow emission band is produced in this recombination) then lies in a spectral range with a shorter or longer wave length. In the case of gallium arsenide, it is in the near infrared spectral range and it is in the green in the case of gallium phosphide. And in mixtures of gallium arsenide and gallium phosphide--we can replace every arsenic atom with a phosphorus atom in the crystal lattice--we can produce intermediate colors, from the near infrared to red, orange, yellow and green. Just with the one system of gallium arsenide or gallium phosphide!

[Question] What will happen in this field next?

[Answer] Obviously as much as possible will be gained from this effect, the so-called injection luminescence in semiconductors. And, since the infrared emitter and in principle the semiconductor injection laser as well are based upon the same effect, that means that here we have a field of immense importance. The infrared emitter diodes are used on a large scale in the so-called optoelectronic couplers, which serve in the galvanic decoupling of electrical equipment. Medical technology in particular is increasingly dependent upon this decoupling, because we then obtain absolutely safe equipment that is linked to the human being. But the couplers are being used with an extraordinary rate of expansion in many other cases as well. The optoelectronic couplers consist of an infrared emitter diode and a silicon phototransistor or a photodiode as a unit. They are sometimes also separated by an interval through which some kind of disable pulse can be given--a punched card, for example, which then blocks the light current from the infrared emitter diode to the radiation receiver and switches off the signal. It can be used for counting operations, etc. Especially advantageous is the

fact that the spectral sensitivity of the silicon receiver corresponds superbly with the emission of the gallium arsenide infrared emitter diode.

But the injection lasers, which are more and more often mentioned in connection with the transmission of information over glass fibers, are in principle based upon the same effect. We know that the optical fiber shows absorption minima at certain wave lengths. And we want to conduct the farthest-reaching signals without having to use intermediate repeaters. We have three minima in the glass fibers now available. One minimum is at 0.85 micrometers, the second at a wave length of 1.3 micrometers, and the third at 1.55 micrometers. Indeed, the longer the wave length, the lower are the minima. So the best wave length to ensure a very far-reaching transmission would be 1.55 micrometers. To be sure, we still have the so-called dispersion in the fibers, which does play a role and whose minimum is 1.3 micormeters.

As early as the beginning of the 1970's, a group of Soviet researchers proposed--and this was realized very quickly--that a complicated system using indium, gallium arsenik and phosphorus be put into effect for semiconducters for these bands with longer waves. That is pioneer work on the part of these Soviet scientists. Today these wave ranges are the ones that are either already in use internationally or are being made accessible. Internationally, the longer wave lengths are only in the experimental stage or are just coming into use. We can say without exaggeration that optical fiber transmission may well unleash a technological revolution, just as in the use of microelectronics in general in computer technology, in the so-called computerization

[Question] How do the research results find their way into practice?

[Answer] Because of the large number of physical effects and the associated technologies of optoelectronics, an enterprise that develops and produces optoelectronic components is particularly dependent upon cooperation with research establishments outside the enterprise. Thus it is hardly any wonder that precisely the VEB Television Electronics Works in Berlin has for many years been providing examples for new and better methods of cooperation with academy and university facilities in checking out research results, just as the 11th SED Congress calls for on a large scale. Otherwise, the numerous optoelectronic components could not be developed by one enterprise at all.

I believe that in closing, without wishing to overvalue the field of optoelectronics, one can say that an end to this breath-taking pace in the implementation of optoelectronics as a modern key technology is not in sight either with respect to display technology, the issuing of information, or picture recording and especially the optical transmission of information.

9746
CSO: 2302/29

EAST EUROPE/MICROELECTRONICS

NEW APPLICATION POTENTIAL OF COMMODORE 64 PLUS UNIPORT

Budapest MAGYAR ELEKTRONIKA in Hungarian No 3, 1986 p 110

[Article by Laszlo Bansaghi: "Commodore 64 + Uniport=New Applications"]

[Text] The development of a universal signal receiving/signal transmitting peripheral, UNIPORT, which can be connected to the Commodore 64 microcomputer is nearing completion at the Mathematics Faculty of the Budapest Technical University.

As a receiver it is suitable for sampling electric signals on 16 analog channels and A/D conversion of them or receiving digital signals on four 8 bit channels. The signal samples collected are stored in the memory of the microcomputer.

As a transmitter it is suitable for producing programmed analog signals on four A/D converter channels or digital signals on four 8 bit channels. Direct control of switches or relays on eight independent lines is possible.

In both the transmitter and receiver mode it can realize many variations of the basic operations and it is capable of variable signal following contacts with the linked peripherals.

A BASIC and a machine code system program operate the hardware functions of the UNIPORT.

The machine code program makes fast operation possible; users acquainted with the program can also use it independently as a subroutine.

The BASIC program realizes a machine-user link of a query/response type, so those with less experience can also use the system without difficulty.

By using the UNIPORT the Commodore 64 becomes suitable for direct watching, collection and processing of the results of measurements or the signals of physical, chemical, biological, etc. processes and for sending analog or digital signals to connected peripherals for control and regulation.

8984
CSO: 2502/70

EAST EUROPE/MICROELECTRONICS

HUNGARY'S TXC-2000 TELEXCOMPUTER

Budapest MAGYAR ELEKTRONIKA in Hungarian No 3, 1986 pp 110-111

[Text] The TRITON Computer Technology and Telecommunications Small Cooperative has developed a modern telegram handling device for the Post Office. Using elements of a professional personal computer the fourth generation TELEXCOMPUTER offers subscribers high level and modern new services in the area of telegraphy (and data transmission). With its use one can produce fast and error free messages (telegrams) with automatic forwarding and reception and reliable archiving of all subscriber traffic.

The TELEXCOMPUTER does not automate the preparation of telegrams, issue and storage of call numbers and forwarding and reception of information with separate manual operations, rather it automates the entire process--the entire sequence of tasks--uniformly. After execution of the sequence of tasks the system automatically issues a report on the tasks carried out.

In the event of an unsuccessful call attempt the TELEXCOMPUTER automatically repeats the call attempt, after the passage of a waiting time.

These services are of outstanding significance for subscribers connected to electromechanical telegraph and telex centers (e.g., TW 55) for by using the TELEXCOMPUTER they get possibilities "equivalent" to the subscriber services of stored program controlled telex centers.

Its most important characteristics are:

--modern microprocessor structure,
--an easily read display free of fluctuation,
--a modern optical keyboard,
--a bidirectional alphanumeric printer,
--floppy disk background storage,
--adjustable line speed,
--exchangeable alphabets,
--automatic letter/number shift,
--automatic carriage return/line raising,
--accented letters,
--small and large letters on the screen to distinguish between incoming and outgoing messages,

--a service line on the screen with the most important information for subscribers,
--services supporting the user,
--archiving of messages received, and
--flexible program expansion.

The instruction system takes care that the operator can solve complicated tasks with simple instructions, while the TELEXCOMPUTER performs all the functions of traditional telex machines.

The program system creates four basic pillars:

--the instruction system,
--the file management system,
--the editing system, and
--the line transmitter/receiver system.

The instruction system makes possible the input of commands and corrections, checks the commands entered, provides information on the location and type of errors detected and executes them if they have no errors.

The task of the file management system is to provide and administer data traffic between the transmitter and receiver memories of the TELEXCOMPUTER and the files (telegrams, tables, etc.) stored on floppy disk.

The editing system serves error-free preparation of files (telegrams, tables, etc.), relieving the burden on the operator to a maximum degree. The editing system does this in such a way that some of the customary human errors are excluded in advance, and errors can be corrected quickly and conveniently.

The task of the line transmitter/receiver system is to constantly watch for incoming calls, service the calls and initiate and structure outgoing calls and conduct the correspondence. Correspondence can take place in the traditional way from the keyboard or by forwarding to the line information (telegrams) prepared in advance and stored. During correspondence the system has the task of constant break observation and break initiation.

Telegraph Subscriber Services

--Call initiation from the keyboard. Repeating the call in the event of an unsuccessful call (RETRY).

--Direct calling. When one of the three functional keys is pressed the system automatically calls up the preprogrammed call number (HOT1, HOT2 or HOT3).

--Calling with abbreviated numbers. A maximum of 99 abbreviated call numbers can be generated.

--Automatic forwarding. Messages edited in advance and stored on floppy disk can be forwarded automatically to subscribers designated with traditional or abbreviated call numbers; this includes making the contact automatically, .pa

getting a receipt and breaking the contact. In the event of an unsuccessful call it automatically repeats the call three times.

--Task series. By using a series of commands for automatic forwarding of messages with multiple addresses one can create a task file. When this is activated all the daily outgoing messages can be executed automatically, without manual intervention. This system provides a report about execution of this activity.

--Delayed forwarding. A time can be assigned to any of the commands figuring in the task file discussed above. In such cases the task is executed only after the given time.

--Multiple address messages. The system forwards the message (telegram) sequentially to subscribers on a list compiled by the operator. In the event of an unsuccessful call the call is repeated automatically three times.

--Preparation and editing of telegrams (messages). Telegrams are prepared and edited on the screen and then sent to the floppy disk. In the case of an incoming call the information received is printed out, then put on floppy disk, while the editing continues uninterrupted. When two bell characters are received an automatic connection to the line is made and the dialog becomes possible on the screen.

--Work storage (buffer). A minimum of 6 K bytes of work storage (RAM) makes it possible to prepare and store long texts. After the contact is made the information in work storage can be forwarded to the line.

--Text editing functions. A modern text editing program system supports the operator in correction-free preparation of messages or telegrams.

--Display (in accordance with CCITT standard S.21). The transmitted messages appear on the screen in accented large letters. The accented letters sent to the line consist of two letters in accordance with the rule given. Received telegrams or information appears in small letters.

--Indicator-service line. The following information appears in the top line of the screen, the so-called service line:

--designator (identifier) of station
--date, time
--line status
--operating mode of station
--type of alphabet used
--operability of floppy disk.

8984
CSO: 2502/70

EAST EUROPE/MICROELECTRONICS

POSSIBILITIES, TASKS OF HUNGARIAN TELECOMMUNICATIONS INDUSTRY

Budapest MAGYAR ELEKTRONIKA in Hungarian No 3, 1986 pp 28-31

[Article by Frigyes Berecz: "Tasks and Possibilities of the Hungarian Telecommunications Engineering Industry"]

[Excerpt] The Future of the Domestic Telecommunications Industry

The telecommunications of the future can be outlined with the aid of the four chief characteristics described thus far--the integration of computer technology and telecommunications, the integration of systems, the integration of services and the growth of information needs. The developed industrial countries may reach this development within one or two decades, the others may do so one to six decades later--depending on their level of development and economic development strategy. Some countries intend to participate in the development not only as users of the telecommunications systems but also as manufacturers of them. Only a few industrial great powers can strive for complex manufacture. The industrially developed smaller countries can become partners of the great powers by working together internationally. But modern telecommunications networks need very many types of final products and subassemblies and even more types of parts for them. Only relatively few countries are capable of full scale manufacture of these or of significant participation in international cooperation, but the conditions exist in numerous countries for the development and quality production of a part of the components.

The Hungarian telecommunications industry--despite the fact that thus far it has supplied its domestic customers with equipment up to nearly 100 percent--cannot aspire to manufacture of all the products needed for integrated services digital networks (ISDN) or of all the materials and parts needed for them. But thanks to its traditions and conditions it can assume a significant role in international cooperation and could be capable of considerable accomplishments in several special areas even independently. Considering that the enterprises manufacturing developed products of the telecommunications industry export two thirds to three fourths of their production it can be established that the industry which can be considered in the development of Hungarian telecommunications will not struggle with quantitative limits. If this branch of industry realizes the conversion to modern product generations then it need reckon on quantitative limits even less, since the new

technologies are extraordinarily productive. (On the contrary, holding the personnel and giving them enough work will be the chief problem.)

But from the viewpoint of technical level, quality and reliability it must achieve a very significant development. For this purpose the Hungarian telecommunications industry must gather together the achievements coming from the domestic research and development sites, those which can be obtained in socialist cooperation, those which can be purchased from the enterprises of capitalist industrial countries and those which can be attained by cooperation with them. This--as an aspiration--has been done with the development of the government and ministerial programs.

So the future of the domestic telecommunications industry depends on how successfully these programs are carried out.

The Path Toward ISDN

Not a single country today manufactures, much less uses, ISDN systems in a complex way, although thanks to the achievements of technical development a few countries would already be capable of it. The reason for this is that even the richest countries cannot permit themselves to replace the old networks with modern ones at one blow. So the task to be solved is the lasting cooperation of the new and the older generations.

For this reason the complete building up of an ISDN system in our country will be a task for the first half of the coming century. This does not mean, however, that the distant goal can be ignored. Development of final products meeting the ISDN requirements (and of the materials, parts and technological tools needed for them) is an extraordinarily time demanding task. Our offspring can attain the complete building up of an integrated services network in the first decades of the coming century only if even today every developmental goal is adjusted to the requirements of it and if work is done in the isolated developmental workshops for the attainment of a coordinated target system. The national medium-range research and development plans and the developmental programs assigned to them should encourage this work. On the one hand they should harmonize the following:

--the efforts of users (operators) and manufacturers,
--the domestic developmental goals and those formulated within the framework of CEMA,
--the common goals of the various domestic manufacturing branches and enterprises and of electronification, and
--the financial sources and cost needs of the developments.

On the other hand they should watch the new results of the technical development taking place in the world and the course of developmental work in progress in our country and, as needed, they should intervene and modify the goals of the programs and the directions of activities.

More money is available in the Seventh 5-Year Plan than in previous ones for the fulfillment of these programs--if you add together the resources of the state and of the enterprises intended for this purpose. So it can definitely

be stated that the growth of the significant "technological gap" which has arisen in electronics--and in the telecommunications industry therein--can be stopped, it can even be decreased, with work according to the program. Even today the domestic telecommunications industry is manufacturing switching technology, land-line and microwave transmission technology devices which meet the ISDN requirements (or could do so with not too much work). With fulfillment of the program goals this product scale will expand considerably by the end of the decade and thanks to industrial specialization and cooperation the achievements of the CEMA member countries and their products manufactured on this foundation will become accessible to us. The assortment may be supplemented and expanded by everything which we manufacture on the basis of licenses and know-how obtained from the enterprises of developed capitalist countries or which we can obtain by establishing cooperation projects and joint enterprises.

With a consistent exploitation of these achievements the domestic telecomumunications industry will be able to contribute, not only quantitatively but also from the viewpoint of technical level and quality, to seeing that Hungarian telecommunications moves out of its present unworthy position and can preserve and even strengthen its positions on the world market.

Autobiographic Note by Frigyes Berecz

I graduated from the Electrical Engineering School of the Budapest Technical University in 1964 and from the Economic Engineering School in 1969. I have worked at the BHG Communications Engineering Enterprise since 1956. I have worked in a number of areas of professional communications engineering and have been through virtually every step of leadership work. Since January 1981 I have been director general of the enterprise. I am married, my wife also is in the profession. We have two daughters. We might have some useful hobbies but we have virtually no free time which we might fill according to our desires.

8984
CSO: 2502/70

EAST EUROPE/MICROELECTRONICS

DEVELOPMENT OF HUNGARIAN TELECOMMUNICATIONS NETWORK

Budapest MAGYAR ELEKTRONIKA in Hungarian No 3, 1986 pp 18-27

[Article by Gabor Jako: "Program for the Development of the Hungarian Telecommunications Network"]

[Text] Introduction

Telecommunications is one of the most important elements of the infrastructure, an essential tool for the economic life of the country and for its defense potential. Telecommunications is one of the prerequisites for production and the receipts from it contribute to increasing the value of the gross national product.

The information offered by telecommunications, as a new production factor, has a crucial role in the development of the people's economy.

The development of telecommunications services is not only an economic question, it is also a social question. It has a signficant role in the property and physical security of the populace of the country, in contacts among families and in health protection. Telecommunications is an important element in the ability of the villages to hold their population.

The losses deriving from the lack of telecommunications appear at the postal, economic and social levels alike. Deficient, obsolete telecommunications service causes significant lost income for the Post Office and does not make possible the development of new, so-called telematic services to the necessary degree.

The lack of telecommunications information also makes its effect felt in industry and agriculture. Lost work time, empty runs by vehicles, lost business deals, etc. cost several billion forints at the national economic level.

The damage appearing in the area of health affairs and social policy is also considerable, and one cannot ignore the unfavorable effect of the lack of telecommunications on the general social environment either.

The national economic losses deriving from the low level and deficiencies of telecommunications can be put at about 11-12 billion forints per year.

The Status of Hungarian Telecommunications at the End of the Sixth 5-Year Plan

We have shown data characterizing the status of telecommunications in Table 1.

Table 1. The 1985 Indexes for Telecommunications and the Developmental Prescriptions for 1990 and the year 2000. (The 1990 data contain the prescriptions of the Postal Developmental Proposal.)

Category	Units	National Data		
		1985	1990	2000
Telephone sets	1,000	1,484.5	1,785.0	3,256
Main station phones	1,000	738.8	960.0	2,360
Substation phones	1,000	745.7	825.0	896
Sets/100 inhabitants	%	13.95	16.9	30.7
Main station sets/100 inhabit.	%	6.9	9.1	22.2
Main station/substation ratio	%	49.8/50.2	54/46	72/28
Public, official phones	1,000	219.9	248.0	1,316
Residential phones	1,000	498.9	685.0	1,890
Residential sets/100 inhabit.	%	13.1	17.3	42.4
Public, open phones	1,000	19.9	27.0	50.0
Exchange capacity, main exch.	1,000	911	1,164.2	2,821
Capacity loading	%	81.0	82.4	83.6
Degree of automation	%	88.8	93.8	100.0
Number of localities with long distance service	each	500	1,226	3,064
Customers waiting	1,000	465.5	520	600
Telex stations	each	10,782	13,750	27,000
Data stations	each	1,498	4,715	8,820
of these:				
--on data network	each	133	2,000	4,120
--on telephone network	each	1,365	2,715	4,700
Telex stations/10,000 inhab.	%	10.1	13.0	25.4
Number waiting for Telex	each	1,051	--	--

Telephone Service

The quantitative and service levels of domestic telephone development are not satisfactory. In the light of international data (Figure 1) it can be established that the telephone density characterizing service is one of the lowest in Europe.

The regional distribution of telephone sets and main station sets is unfavorable also; 49.4 percent of the all phones operate in the capital, 50.6 percent in the provinces.

The ratio of main station and substation phones indicates the traffic overload on the main exchanges and the decrease in the quality of service. At peak traffic times the ratio of successful calls does not reach even 50 percent.

From the viewpoint of the degree of automation of the telephone network we are in last place among the European countries (88.8 percent).

At present 81.3 percent of the main station phones participate in long-distance calling but only 500 (16.3 percent) of the 3,064 settled localities of the country are connected to the long-distance service. The map in Figure 2 illustrates the present status of the telephone service and the automated areas of it.

With the introduction and spread of long-distance calling telephone traffic grows at an annual average of about 10 percent. The increase in international traffic is even more considerable, about 24 percent per year in the last decade. The condition of the equipment of the telephone network shows an unfavorable picture. Almost 30 percent of the main exchanges and subexchanges, 18 percent of the sets and 4 percent of the transmission technology equipment should be replaced immediately.

Telegraph and Data Transmission Service

The Post Office has public telegraph, telex and data networks. The public telegraph network takes care of international and domestic telegraph traffic. The number of telegrams sent per year exceeds 12 million. We are at the head of the world list on the basis of telegram traffic per 100 inhabitants.

The telex network is completely automated. The international long-distance service links subscribers to more than 160 countries. The present 10,782 telex stations mean a national supply of 10.1 (per 10,000 inhabitants), which is a good bit behind the average for European countries.

An electronic teletype and data transmission center went into operation in 1981 in the area of data transmission service. The present 1,498 data stations indicate a lag below the European average. The number waiting is 1,228.

The Basic Telecommunications Network

The basic telecommunications network (interurban and local networks) make possible the transmission of all sorts of information (telephone, telegraph, data, etc.) for the general use and so-called closed use networks.

Nearly 90 percent of the local networks operate on underground cable pairs; the remaining 10 percent is divided among overhead, wall cable and PCM transmission systems.

Coaxial cables and broad band microwave systems provide the long-distance circuits of the interurban network, but the ratio of overhead lines is still significant (about 20 percent). The condition of the mainline interurban network is relatively good; about 6 percent needs reconstruction.

Evaluation of the Present Status of Hungarian Telecommunications, Conclusions

Domestic telecommunications shows a significant backwardness compared to the European countries and compared to the developmental level of the people's economy. The basic reason for this is that for decades we have turned only 3 thousandths of the gross national product, instead of a lasting average investment level of 6-7 thousandths, to the development of telecommunications. In recent decades the telecommunications needs have increased much more quickly than the investment resources awarded to the Post Office. It was possible to satisfy only the most urgent needs, while a significant proportion of the equipment got used up and the automation and development of the national telephone network was forced into the background. As a result of this the ratio of main station and substation phones and the regional distribution of them developed unfavorably.

The number waiting for residential phones grew at a good bit faster pace than the number of phones connected. At present a telephone operates in every third residence in the capital and in every fourteenth residence in the provinces. The small number of residential phones has become a factor in politics and public morale. During the Sixth 5-Year Plan the supply improved as a result of the development of public, open telephone stations, but the regional distribution of them is far from satisfactory.

LB and CB manual exchanges introduced in the 1920's make up 11.2 percent of the main exchange capacity of 911,000. Local automation according to lines remains a good bit below the European average. Table 2 shows characteristic data for a few European countries.

Table 2. Data Characterizing the Telephone Situation of a Few European Countries (1 Jan 84).

Country	Rate of Development: 9 Year Average (%)	Degree of Local Automation (%)
Sweden	3.8	100
Switzerland	3.3	100
Denmark	5.9	100
Norway	6.1	100
Holland	5.9	100
FRG	7.3	99.4
Finland	5.4	100
Austria	6.4	100
Belgium	4.8	100
Italy	5.7	100
Spain	6.3	99
Greece	5.5	99.6
Czechoslovakia	3.1	99.3
GDR	4.0	100
Bulgaria	10.4	97.2
Yugoslavia	9.5	99.8
Soviet Union	5.7	99.2
Hungary	3.3	88.3

As a result of the low level of automation of the network, of the equipment physically or morally used up and of the unfavorable station composition the ability of the network to take care of the traffic and the ratio of successful calls are small.

The number of telegrams sent per year in the area of the public, open telegraph service--because of the backward telephone supply--is very large. The labor demanding nature of handling telegrams causes a chronic labor shortage, especially in Budapest.

The completely automated telex traffic shows an annual traffic increase of about 10 percent. The Budapest center is modern but the provincial centers are obsolete and should be replaced. The investment sums available limit an expansion of the number of telex and data transmission stations.

The basic telecommunications network and the public use interurban network therein can handle the long distance traffic only at a great loss, with hand operation and great delays. The high ratio of overhead lines means a very big problem from the viewpoint of maintenance.

The number of domestic and international telephone circuits per 100 main station sets is 2.6, which is very low and one of the causes of the traffic congestion (3.5-4 would be a favorable value). Bringing the network to an acceptable level requires an expansion not only of circuits but also a proportional expansion of the capacity of the receiving exchanges.

The backwardness of telecommunications cannot be viewed with resignation. The unfavorable trends can be stopped and turned around by posting realistic goals and by coordinated measures. The next three 5-year plan periods seem necessary for this, and will be sufficient in the event of development on a suitable scale.

The Long-Range Goals of the Development of Telecommunications

The tensions appearing in telecommunications appear primarily in the area of the telephone service. Ending them is the most important task of long-range development.

The Telephone Service

The chief goals should be determined with an awareness of the quantitative, qualitative and service needs, starting from the present situation and keeping in mind the interests of the economy and the populace. A fast and good quality telephone service which can be used by everyone day and night has the character of a public utility and so belongs in the sphere of basic supply just like water, electricity and gas. The most important goals can be summarized as follows:

--In the interest of increasing the reliability of the network and improving the quality of service the reconstruction of the main exchanges and subexchanges and of the network must be carried out.

--By 1995 the provincial settlements must be supplied with automatic local and interurban telephone service by reducing the lack of proportion in regional supply.

--We must end the traffic overloading of telephone exchanges and networks, which can no longer be sustained and we must use a part of the new capacity for this purpose.

--We must develop telephone supply in accordance with the developmental level of the people's economy so that it will meet the goals of the settlement development conception.

--We must guarantee the continual satisfaction of the public, official needs directly linked to state leadership and production and serving to produce and increase the national income, guaranteeing that the traffic needs are taken care of.

--We must end the tensions appearing in the area of residential service needs and must improve the ratio of main station and substation sets to the benefit of the main station sets. By the end of the century the average waiting time, now longer than 10 years, must be reduced to a few months.

--The number of public, open telephone stations with average access--suitable for long-distance calls--must be increased significantly.

--In the interest of planned, economical frequency use we must create a uniform radiotelephone network in Budapest as a first step toward and as a part of a uniform telecommunications network for the country. Then the task will be building up national radiotelephone networks.

--For the purpose of service expansion, reconstruction, development, increasing the efficiency of operations and reducing the need for live work we must carry out a technical system change in such a way as to fit in with the future requirements of ISDN.

--We must develop a centralized, computerized operations and network control system for high level and efficient performance of the operational, maintenance and failure prevention work on networks which are constantly growing and becoming more complicated.

Table 1 contains the most important indexes for telecommunictions prescribed for the year 2000.

The base for the developmental strategy is creation of a national automated telephone network which will be capable of satisfying the needs of society at an appropriate level. With development a telephone density of 30.7 can be achieved. Figure 3 shows the development of the number of telephone installations and unsatisfied needs between 1965 and the year 2000.

Satisfying the public, official needs is possible within the framework of expanding investments in the cities, proportional with automation in the towns. The more important fraction of the residential telephone needs will be satisfied, and this will have a favorable effect in solving congestion--because it will dilute the traffic. The supply ratio between the capital and the provinces will improve and by the year 2000 will reach 55/45 percent to the benefit of the provinces.

A technical system change must be carried out in the interest of modernizing the operation of the telephone exchanges and reducing the need for development and live work. The appearance of electronic devices in the area of the telephone service can be expected from the end of the Seventh 5-Year Plan period. As a result of this--and as a result of modernization of the transmission devices--the gradual building up of an integrated digital network can begin. Network integration will appear first in the integration of switching and transmission and then in the integration of services. With the appearance of the new technology the sphere of subscriber and operator services can expand.

The Telegraph and Data Transmission Services

It is a prerequisite for the spread of computer technology applications that the Post Office be able to create data transmission and telematic systems suiting professional needs with high level services. On the one hand these systems will realize an integrated digital data network and on the other will move in the direction of services integration in that the telephone network will be part of the telematic systems.

In the course of introducing the services the Post Office must play a coordinating role, because the devices being connected to the postal systems must be developed according to uniform principles and standards.

Creation of a line switching and packet switching data network, a Teledata, Teletex and Facsimile service is absolutely necessary within the Seventh 5-Year Plan. Otherwise Hungary will be deprived, in both its domestic and international contacts, of the possibility of information flow and information exchange.

The chief goals of the telegraph and data transmission services are the following:

--satisfying the demand for the services to an ever greater degree;

--further expansion of the integrated digital data network begun in the preceding plan period, thus continuing the replacement of obsolete telegraph centers with electronic ones and building up a line switched data network;

--building up an infrastructural telecommunications network for telematic services to satisfy the needs of computer technology applications and creating a packet switching data transmission service, realizing cooperation with the international packet switching networks;

--establishing experimental centers for a national Teledata service and then establishing operational Teledata centers and the network subsystems belonging to them;

--opening a full Teletex service on the line switched and then on the packet switched data networks;

--building up an automated operations system for the telegraph and data transmission networks;

--mechanization of the receiving and forwarding system for telegrams arriving on telephone or telex and for international telegrams by creating a picture screen terminal message switching system in Budapest, and then spreading it throughout the country;

--creating line switched and packet switching and leased line data networks to satisfy the needs of computer technology;

--developing the postal systems for the broad spread of telematic services;

--introduction of new, value added data and text communications services and broad cooperation among networks and services;

--broadening international data network contacts;

--mechanizing the technical and business operations infrastructure for the services.

On the basis of a long-range forecast one cannot expect a substantial change in public-use telegraph network traffic, but one can reckon with a further increase in demand for the telex service.

A large scale increase in the quantitative and qualitative demands for data transmission can be taken as certain also.

Among the new services, in addition to facsimile already partially introduced, teletex and videotex services will play an important role. With a suitable organizational background teletex could reduce administrative work while videotex makes possible the transmission of text and graphics selected individually by the subscriber.

With the development of computer networks there will be an introduction of data transmission and packet switching services suiting the structure of communications between computers.

The Basic Telecommunications Network

The long-range developmental guiding principles for the basic telecommunications network are:

--We must determine, on the basis of the needs deriving from the reconstruction and development plans for the various public-use services, a developmental program for the wired and wireless transmission paths of the basic telecommunications network, the quantitative needs to be satisfied and a schedule for their realization.

--We must build up the telecommunications paths and the capacity of systems in such a way that in the event of the failure of one path or system traffic can be handled at first by manual and later by automatic controls bringing in reserve equipment or using a detour path.

--Taking into consideration the technical and economic factors and the acquisition possibilities we must prescribe the greatest possible use of digital (PCM) systems in the development of new paths for the network which now operates almost exculsively with analog transmission systems.

A very large scale development of the basic telecommunications network must be carried out if the swiftly growing long distance traffic is to be free of congestion. The number of public-use interurban telephone circuits must increase from the present 19,000 to 28,000 by 1990 and to 80,000 by the turn of the century.

An adequate quantitative and qualitative level of the basic network is a precondition for automation of the national telephone network, for the spread of the telex service, for introduction of new telematic services and for creation of an integrated services network.

In the course of the development of the basic telecommunications network we will realize the Hungarian sections of the complex communications system of the socialist countries and expansion of the basic network will create the conditions for the gradual integration of the postal network and the closed purpose networks.

Tasks for the Seventh 5-Year Plan

The chief goal of the Seventh 5-Year Plan is the time proportional fulfillment of the long-range developmental program for telecommunications to the year 2000. Table 1 contains the prescriptions of the Post Office developmental proposal prepared on the basis of the long-range telecommunications development conception.

Telephone Service

--The most important Seventh 5-Year Plan tasks of the telephone service include taking care of the further accumulation of reconstruction projects and improving the quality and operability of the service. Within the framework of the latter task:

--we must end traffic overloading;
--we must extend the automated long-distance network to about 40 percent of the settlements;
--we must modernize maintenance technologies; and

--we must create that part of the postal infrastructure and repair-assembly background industry which is now missing.

The capacity of the network must be expanded proportionally in harmony with reconstruction and automation of the network.

a. The basic version prescribes acquisition of a main exchange capacity of 282,000 and reconstruction of a main exchange capacity of 119,000. A developmental rate of 3 percent for telephone density does not reach the desired level; in addition the rate of reconstruction remains below expectations. By the end of the plan period the number of those waiting may exceed 600,000. The development makes possible the automation of only 272 settlements by 1990, so the planned automation cannot be completed until 1995.

b. The Post Office developmental proposal is adjusted to the needs of the long-range developmental conception and the telecommunications needs of the central electronics economic development program. Acquisition of the prescribed main exchange capacity of about 400,000 and reconstruction of a capacity of 151,000 will stop the deterioration in the operability of the network and bring a slight improvement in the quality of service.

The 254,000 net capacity increase will make possible the connection of about 220,000 new main station sets and the telephone density will be 16.9 per 100 inhabitants by 1990. The average annual development rate is 3.8 percent, which is half a percent higher than the development rate for the Sixth 5-Year Plan.

The automation of 726 localities will make possible completion of the automation of the national telephone network by 1995. If the Post Office developmental proposal is realized the degree of local automation of main exchanges will increase to nearly 94 percent and the ratio of main station and substation phones will improve significantly. Forty percent of the settlements of the country will be connected to the long-distance service and the rate of automation of the villages will accelerate in addition to the cities.

The following must be done in Budapest:

--reconstruction of the 7A1 exchanges and of the networks belonging to them, because the supply of spare parts for these exchanges cannot be solved and these exchanges are unsuitable for long-distance calls;

--traffic reconstruction and load reduction for the 7A2 exchanges by setting up ARF or TPV relief exchanges;

--operations reconstruction for the 7A2 exchanges and modernization of maintenance for the ARF exchanges by building in new, centralized maintenance equipment;

--replacing a part of the obsolete 7A2, PAM and CK equipment which is unsuitable for providing adequate service;

--simultaneous with creation of new exchanges, a reconstruction of the network of the area, together with a reconstruction of the trunk networks;

--introduction of a seven digit system in preparation for the further development of the capital;

--replacement of obsolete subexchanges and the subexchange networks belonging to them.

The following must be done in the provinces:

--reconstruction of the rotary collection node exchanges (IT3 and 7DU), since they cannot be expanded or supplied with spare parts and their presence in the network causes traffic congestion;

--installing new automated maintenance equipment simultaneous with the reconstruction;

--regional reconstruction of the collection point and node exchanges and local and zone networks;

--partial reconstruction of the zone networks so that the telephone service will improve even in areas not automated and so a possibility will be provided for continual service and for the spread of telex and data transmission needs;

--replacement of obsolete subexchanges and networks.

The Telegraph and Data Transmission Services

Further expansion of the integrated digital data network begun in the Sixth 5-Year Plan and replacement of obsolete telegraph centers with electronic systems will continue in the Seventh 5-Year Plan.

Connection of 3,000 telex stations will satisfy 70 percent of the needs; the growth in the number of data transmission stations could be 3,200. Of these 1,850 will be line switched data network stations.

Electronic concentrators or multiplexors will be installed at substation locations.

A packet switching data transmission service must be established to satisfy computer technology application needs. Some data transmission needs must be satisfied with a leased line data transmission service.

By creating a picture screen terminal message switching system in Budapest the mechanization of the system for forwarding telegrams arriving by telephone or telex will begin.

The Post Office plans to set up experimental and then operational teledata centers and network subsystems to create a national Teledata (interactive videotex) service.

Fast telex and teletex, which are tools for the development of modern office technology, will appear as a new service.

The Basic Telecommunications Network

The quality and extent of the basic network determine the telecommunications services in the Seventh 5-Year Plan:

--the use of digital devices and digital systems with a large number of channels must begin;

--digital devices with a small and medium number of channels must be used in development of the zone networks;

--we must prescribe the replacement of obsolete overhead line zone networks and expansion of the existing cables;

--telephone and data transmission needs must be satisfied with a properly scaled basic network in those areas where automation will take place later.

The growing telecommunications needs require that in the plan period we create the conditions for creating the nodes for a basic network with great reliability and sufficient capacity. In this way the level of telecommunications services in the main network and zone networks will increase from the technical and traffic viewpoints alike and it will become possible to satisfy the needs of computer technology. The building up of the basic network must be planned taking into consideration the postal and non-postal needs in the networks under the node. The significant number of networks under a node especially justify that the building up of them take place economically from both the technical and financial viewpoints, with increased use of wireless transmission systems.

Conditions for introduction of a modern operations monitoring and network control system must be created in regard to the entire basic telecommunications network, which will increase the quality of service and the ability to utilize equipment and will increase reliability.

The Conditions and Industrial Background for Realization of the Seventh 5-Year Plan

Realization of the developmental goals of the Seventh 5-Year Plan requires--in addition to the resource needs--the provision of the telephone main and subexchanges, the telegraph and data transmission centers, the wired and wireless transmission equipment, the power equipment, the storage batteries and the various types of cable needed for the investments.

On the basis of conferences with the manufacturing enterprises it can be expected that about 80-85 percent of the equipment, device and cable needs of the Post Office Seventh 5-Year Plan can be satisfied with products already manufactured or new products to be made in the plan period. The telegraph and data transmission centers, switching devices, storage batteries and some cable types will be obtained from import.

The development of the next period is based on modern switching and transmission technology. The ratio of digital devices is constantly increasing, but use of the AR crossbar exchange family and electronic rural exchanges and concentrators of domestic manufacture will still be the determining factor in the Seventh 5-Year Plan. Installation of analog AR exchanges is economical in the case of automating the node zones already begun and when expanding the existing AR type regional and collection node exchanges.

In the zones designated for reconstruction a decision between analog and digital technology must be made taking into consideration the device assortment and the existing conditions. Modern, digital switching technology cannot be considered in the first years of the plan period because of the embargo.

In the Seventh 5-Year Plan period the Post Office is planning developments primarily in those areas where domestic electronic devices make economical solutions possible. Thus the automation of the zone networks will be realized by installing the small electronic exchanges manufactured by Hungarian industry; these can be connected to the higher order exchanges by PCM wired and wireless transmission technology devices which are also of domestic manufacture.

These electronic exchanges cannot be used at higher levels of the network hierarchy because of their capacity limitations, so only the AR type crossbar exchanges can be considered in Budapest and in the cities.

The lack of larger capacity digital exchanges will present a problem primarily where use of the AR exchanges will require significant construction work--not previously planned.

In the plan period there will be a possibility for installation first of imported and then of domestically made digital exchanges only after a resolution of the import limitations.

A larger scale spread of digital switching technology can be planned for the Eighth 5-Year Plan. One of the tasks of the Seventh 5-Year Plan is to initiate this process, that is introducing digital switching and transmission technology into the Hungarian telecommunications network.

Because of the small capacity volume of telegraph and data center equipment we must import it over the longer run too.

The need for analog equipment with a large number of channels is significant in the area of wired and wireless devices, and the installation of digital metal and light conducting systems is beginning. Wireless analog and digital radio relay links will be used in both the main telecommunications network and the subscriber network.

The Post Office plans to satisfy the need for sets by using domestic products. The new types include electronic telephone sets, boss-secretary equipment and microprocessor coin operated sets. Electronic and electromechanical teletype machines will be obtained from socialist import.

Summing Up

Linking together the production goals, product development and the industrial development goals for technological equipment is fundamental from the technical viewpoint. The programs with a coordination character, such as the "G" program, can offer great help in working out and implementing these goals.

Integrating resources, assets and intellectual capacity and a common way of thinking can play a determining role in execution of the Seventh 5-Year Plan tasks of the telecommunications tasks.

An intensive development of telecommunications is a national economic requirement. The lack or poor quality of telecommunications services hurts to a serious degree the utilization of the resources of the people's economy, the low level of services causes serious harm in that it excludes the economy from the improvement in efficiency which could be attained thanks to cooperation and building up market contacts. The further development of the people's economy cannot be imagined without an infrastructure at a higher level than the present one and without the modern telecommunications services making up a part of that infrastructure.

Autobiographic Note by Gabor Jako

I was born in Szekesfehervar. After graduation from the Attila Jozsef Gymnazium I earned my electrical engineering degree at the Budapest Technical University in 1969. I have been working at the Post Office since 1961. At present I am a chief official in the Telecommunications Special Department of the Center of the Hungarian Post Office. My chief areas of specialization are working out system technology plans and medium and long-range development plans and development of equipment. I teach regularly in the further training study courses of the Post Office and conduct broad consulting and committee activity. I am married and the father of one child. My hobbies are travel and photography.

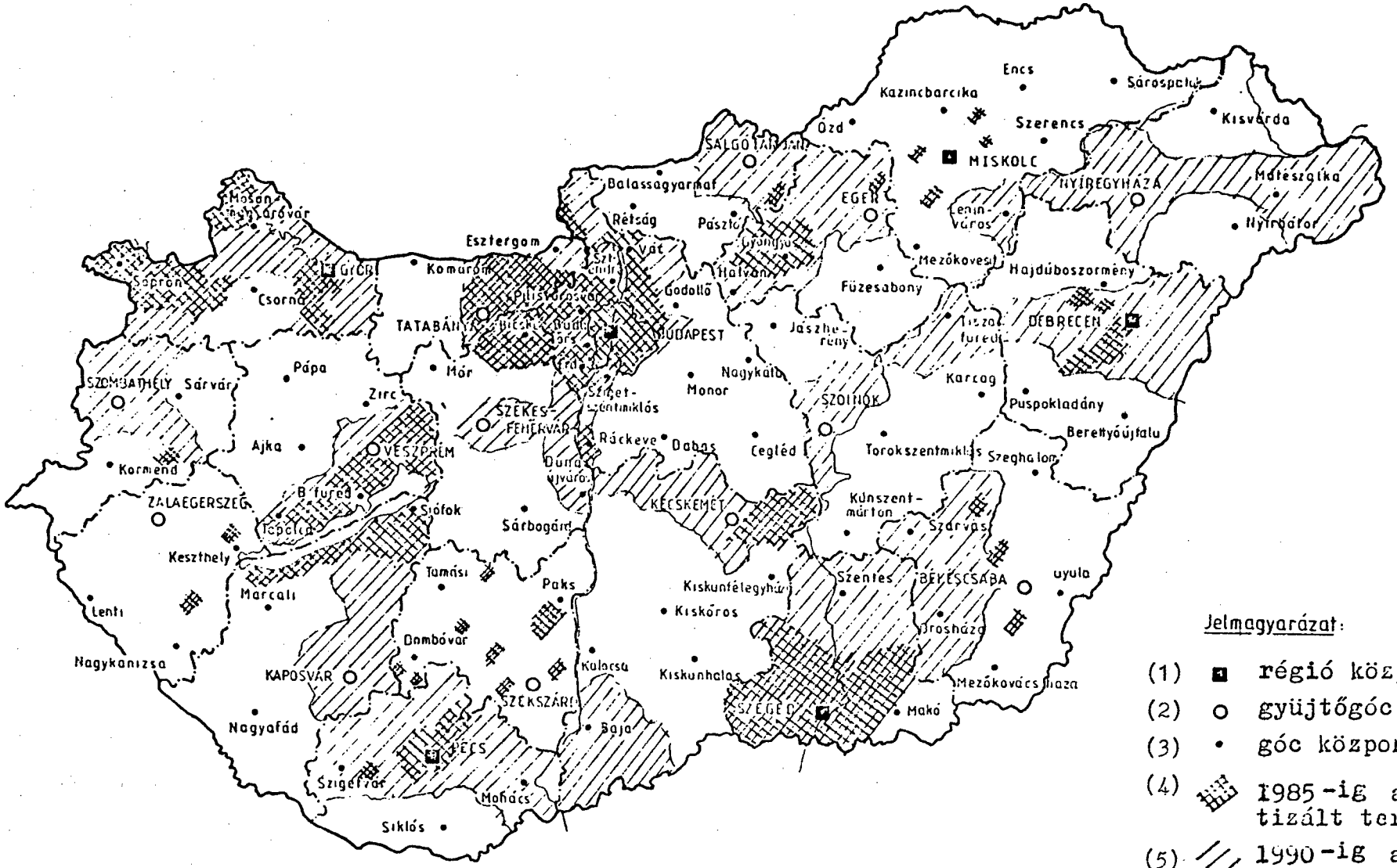

2. ábra Magyarország távbeszélő-gócközpontjai és automatizált területei 1985– 1990-ig

Figure 2. Development of Hungarian Telecommunications Network

Figure 3. Development of Hungarian Telecommunications Network

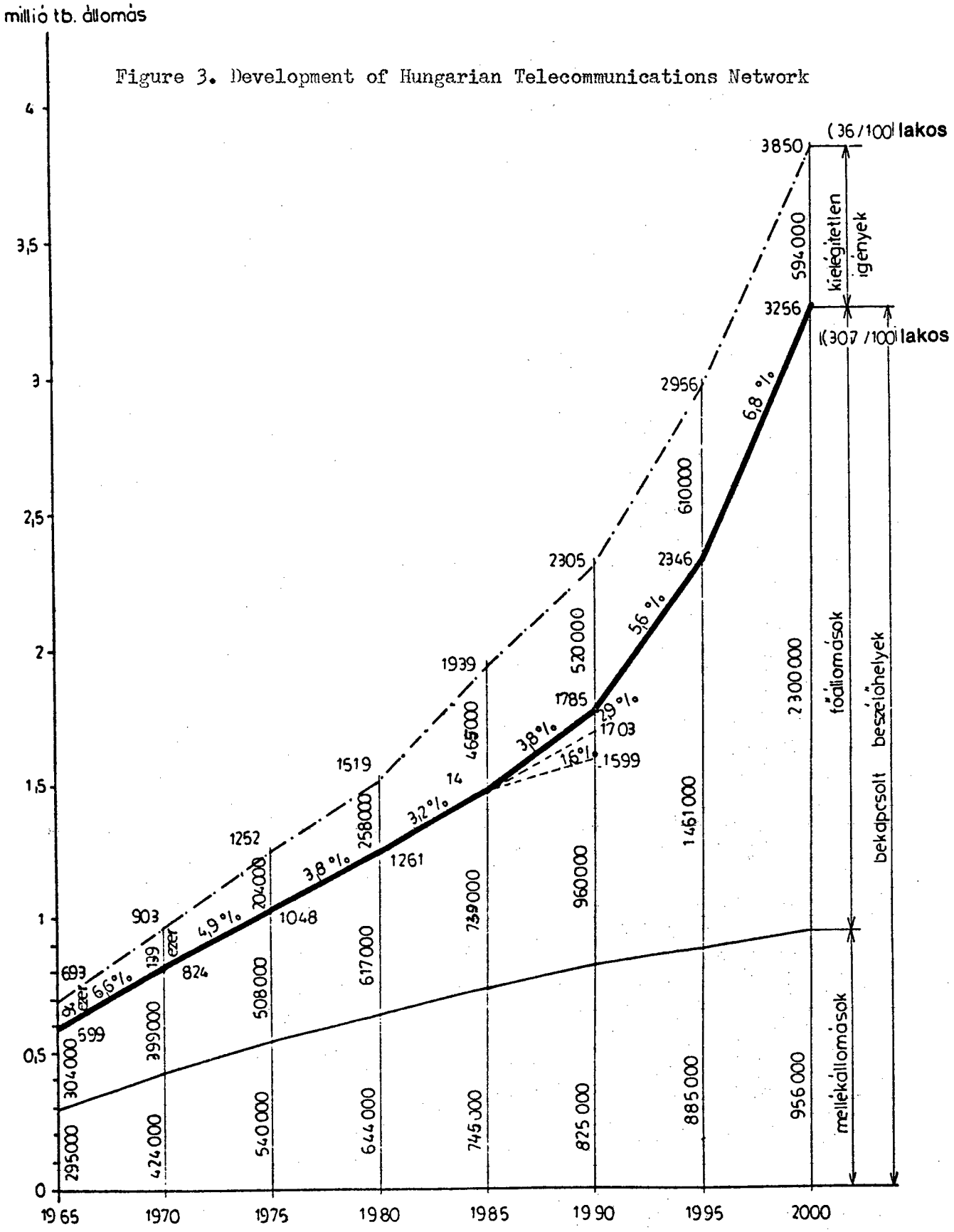

3. ábra A távbeszélő helyek (fő- és mellékállomások) számának és a kielégítetlen igényeknek az alakulása 1965– 2000 között

23

FIGURE CAPTIONS AND KEYS

2. p 22. Telephone node exchanges and automated areas of Hungary, 1985-1990.

   1. Regional exchange
   2. Collection node exchange
   3. Node exchange
   4. Automated area up to 1985
   5. Automated area up to 1990

3. p 23. Development of the number of telephones (main station and substation phones) and of unsatisfied needs between 1965 and the year 2000.

   The vertical line gives millions of phones.
   The top curve is needs, the heavy curve in the middle gives total number of phones, the light curve at the bottom gives the total therein of substation phones (the difference, the middle area of the graph, being the number of main station phones). The percents along the heavy curve give the rate of development. The figures in parentheses at the top give the number of phones, existing or needed, per 100 inhabitants in the year 2000.

8984
CSO: 2502/70

EAST EUROPE/MICROELECTRONICS

LOTRIMOS: SYSTEM FOR IMPROVING TELEPHONE NETWORK EFFICIENCY

Budapest MAGYAR ELEKTRONIKA in Hungarian No 3, 1986 pp 44-51

[Article by Peter Eisler: "Automated Operations Monitoring as a Tool to Improve Telephone Network Quality and Increase Efficiency." The title is followed by a note: "The article describes the results thus far in developing automated operations monitoring systems and summarizes the chief directions for further development."]

[Text] The Targets of the Development: Results

The BHG Communications Engineering Enterprise began development of the LOTRIMOS automated operations monitoring system in 1980. The fundamental guiding principles for design were:

--make the system suitable for performing services which could be supplied with various subsystems,

--modular hardware construction, which makes possible use of the same units in subsystems with different service assignments,

--modular software construction, which makes possible fast introduction of new services,

--flexible system structure, with the aid of which the system could be connected to optional telephone exchanges and network system elements and could be easily modified according to various user needs, and

--development of well defined data transmission and data processing tasks, which would make possible use of computer technology devices which can be obtained commercially.

We developed a new maintenance "philosophy" based on use of the LOTRIMOS system elements which can ensure efficient monitoring and operation of traditional telephone exchanges. We worked out measurement procedures with the aid of which faulty circuits can be located quickly and we developed the basic hardware and software systems for the terminals of the operations monitoring subsystem. By the end of the Sixth 5-Year Plan we had put into operation equipment with about 150,000 test points.

In what follows we will briefly outline the essence of the more important achievements.

Principles of the Maintenance System

Figure 1 shows the basic principles of the maintenance system supported by LOTRIMOS.

Equipment Monitoring

Its task is to establish the failure of equipment at a telephone exchange or a fault in any function, support the corrective maintenance phases with measurement data and collect statistical data characterizing operations.

Service Monitoring

Its task is to measure data characterizing the performance of the telephone exchange and the quality of services.

Analysis

Its task is to determine the operational and long-range inerventions at the telephone exchange making use of the results of equipment and service monitoring in cooperation with the maintenance personnel and to provide reports for the administrative supervisory organs. Another task is to initiate intervention (real-time actions) involving automatic traffic control (network management).

Actions

Using the results of analysis it plans and executes interventions with various time horizons (real-time, short term, long range).

Pragmatics

A goal oriented study of the operational characteristics of some units of the telephone exchange and of the quality of traffic and service, in the interest of discovery of irregularities and implementing scientific investigations.

Development of the Measurement Methods

During the development of the equipment significant emphasis was given to working out the measurement principle used, with the aid of which the faulty circuits can be located in the shortest possible time at the highest possible level of confidence. In the case of circuits with a long holding time we count, at the same time we count the number of busy signals, the number of calls ending in a conversation and generate an efficiency ratio as the quotient of the two. We compare this value--after reaching a defined number of busy signal calls--with the corresponding value of the busy signal response. In the event of a deviation we classify the circuit as faulty. Since measurement of the efficiency ratio itself does not always indicate faulty

operation of the circuit we began to measure the net conversation time. On a given circuit we regard the ratio of net conversation time and holding time as a parameter characterizing proper operation of the circuit. In the case of fast operating common circuits, in addition to determining the number of busy signals, we also count the signals indicating faulty operation. We evaluate as fault indications the positive circuit indications referring to actual failures and deviations of the given circuit from the operational sequence.

In the case of circuits of this type a "lack of success ratio" generated from the quotient of the fault indications and the number of busy signals serves to detect the failure.

Structure of the Operations Monitoring Terminals

The terminals, with three-level microprocessor control, can operate independently or in a network. A maximum of 32,000 test points can be connected to one subsystem terminal. The test points can be ordered into test groups by means of software; the maximum number of groups is 160. The measurement lines are connected to the circuits of the telephone exchange through high impedances. The terminal can have data recording and display peripherals (e.g., matrix printer, display, floppy disk, alarm lamp board) and a data transmission link for communication with the centralized monitoring system to which it is subordinate. Figure 2 shows the structure of the operations monitoring terminal.

The software system of the terminal consists of a real-time operating system and of modules performing various services. An important part is the internal operations monitoring system ensuring the reliability, operability and maintainability of the equipment.

Adaptions

The equipment put into operation thus far proves the correctness of the fundamental goals. The operations monitoring terminal has been coupled to ARM 201 and ARM 202 type transit exchanges (TIMOS system) and to ARF 102, 7A2, Pentaconta and EMD type subscriber exchanges (LIMOS system).

The postal directorates of four countries have approved the system and we have delivered and put into operation on their orders equipment with about 150,000 test points. It is worthy of note that those foreign postal directorates which were able to exploit the advantages of the new maintenance method reached levels in the efficient maintenance of the exchanges which were never reached with traditional tools.

Chief Developmental Trends

Concentration of Operational Monitoring of Unsupervised Exchanges

The first important idea in progress toward completely centralized operational monitoring is that the man/machine interface of the measurement terminals providing operational monitoring of unsupervised rural exchanges and containerized exchanges should be located at the monitoring site.

Development of Centralized Operations Monitoring Networks

The formation of the system can be seen in Figure 3. The tasks determine the number of functional maintenance centers.

The first step is development of an OMC to centralize equipment monitoring of individual stations and of a TAC to centralize monitoring of service (in regard only to the results of traffic measurements and call congestion). The task of the central unit can be taken care of by a suitable computer configuration which can be obtained commercially. The experimental network shown in Figure 4 is being developed through the cooperation of the Postal Experimental Institute and the MIKI [Instrument Industry Research Institute] FSZV subsidiary enterprise. The goal is the development of data transmission and query methods for centralized monitoring systems and of the basic applications software assortment. An essential factor when building up the experimental network was including a monitoring system for the transmission technology network.

Automatic Fee Accounting Systems (AMA)

It will be possible to perform more services with introduction of automatic fee accounting (Automatic Message Accounting, AMA) systems. We show the structure of an AMA system in Figure 5.

The AMA network consists of three important subunits:

--measurement terminals connected to the telephone exchanges (EXT),
--the central data collection and processing system (DKE) and
--the data transmission network.

The EXT unit located at the exchange scans the measurement lines assigned to the subscribers and to the corresponding units of the exchange; from the electric signals it establishes the following basic data:

--the number of subscriber A (the caller),
--the number of subscriber G (the party called),
--the time the party called responded,
--the time of the disconnection,
--the accumulated fee data which can be read on the subscriber branch, and
--the special numbers dialed.

The EXT stores the data temporarily, until it is polled at regular intervals by the DKE central data collection and processing system. The DKE analyzes, sorts and stores the data obtained by polling. The way in which services are organized always determines the structure of the DKE. The data transmission network links the EXT and DKE units. In Figure 6 we show an outline of the structure of the EXT unit. The EXT unit can be connected to any sort of telephone exchange. The IF2-SC interface provides the TTL coupling of the high level signals and the high impedance connection to the measurement lines. With the aid of the OF2-SC output interface it is possible to intervene, for example to disconnect the conversation branches. This service can provide an

outstanding possibility for introduction of the network management services to be described below. The PR2-SC polling and control processor polls and processes the changes of state arising on the measurement lines. The PR2-SC is connected through the serial system bus to the PR2-OP data processing and communications processor which collects the data arriving from the PR2-SC and hands it on to the DKE unit after being polled. This unit processes and forwards operator commands arriving from the DKE and organizes and monitors data transmission. The PR2-OP manages the necessary background stores and the tools for man/machine communication.

A system with the structure described is suitable for performing the following services by processing the basic data measured:

--detailed subscriber accounting,
--collecting bulk accounting data on subscribers (replacing the traditional electromechanical counters),
--identifying caller (subscriber) A,
--tracing nuisance calls,
--providing immediate billing information in the case of domestic and international long distance calls,
--limiting long distance calls, etc.

The services of traditional telephone exchanges can be significantly expanded by use of AMA systems. It is especially advantageous that from the hardware viewpoint the operations and maintenance systems can practically coincide with an AMA system making possible a significant service expansion. Combining the AMA and LOTRIMOS systems, using common data transmissiion networks, can mean a significant network simplification.

Carrying Out Traffic Control Tasks

Traffic control is a combined function of monitoring the network and initiating interventions, the goal of which is to influence traffic flow in the interest of ensuring maximal performance of the network at every location.

The traffic control action consists of three main activities:

--real-time measurement of appropriately selected parameters--characterizing the state of the network or of the telephone exchange,
--selecting the intervention algorithm, and
--performing the intervention.

Figure 7 shows this process.

Defining the intervention algorithms is a very important research task. The intervention algorithms must be defined in such a way that then can also be implemented with digital main exchange systems. There was no possibility for introduction of traffic control procedures in communications networks containing almost entirely traditional systems.

We want to prove with the following examples that supplementing traditional exchanges with stored program controlled operations monitoring systems can bring significant results in this important area also.

The property of the AMA system that it is capable of disconnecting the subscriber branches significantly aids the organization of traffic control interventions of a protective nature. The essence of such intervention is that we remove from the network those call attempts which have a low probability of successful completion. What is most suitable for this is subscriber direct access, for by virtue of this the initiation of the call attempts could be suspended so that barren call attempts would not even burden the initiating exchange. In the example shown in Figure 8 we can sense the overloading of an international or domestic long distance exchange. The sensing of this is done by the TIMOS subsystem of the LOTRIMOS centralized operations monitoring and maintenance system located at the transit exchanges. In the case of traditional exchanges the subsystem watches the development of call intensity on the common control circuits and with an analysis of this can initiate the interventions. In the case of stored program controlled transit exchanges the signals of the overload indicators can be directly disconnected from the processors performing the O/M functions. The LOTRIMOS system can give an instruction through the central data collection and processing unit, designated DKE, of the AMA system to the appropriate EXT units to forbid international and domestic long distance calls. The prohibition can also be executed optionally by taking into consideration the categories assigned to the subscribers. In Figure 9 we show the so-called code-blocking procedure which can be used to end the effect of focused overloading. Let us presume that the transit exchange for a given geographic zone is overloaded. Calls directed to this area from the other parts of the network have a high probability of failure and the repeated calls can lead to the overloading of the initiating exchange. At such a time the TIMOS operations monitoring subsystem terminal belonging to the transit exchange of the overloaded zone senses the overloading and informs the LOTRIMOS central unit of the national network about it. It sends a message, through the DKE unit of the AMA system, to the EXT units located in the subscriber exchanges to the effect that following the dialing of the area code for the given zone the call initiation should be terminated and the calling subscriber connected to the announcing service.

Conclusion

The above example proves that with automated operations monitoring the quality of the operations of traditional telephone networks can be improved and their efficiency increased.

An Expression of Gratitude

The author expresses his gratitude to the development team led by Jozsef Gatmezei, because their achievements made possible the writing of this article, and he expresses his hope that the developmental goals outlined will be realized as soon as possible thanks to their future high quality work.

Autobiographical Note by Peter Eisler

I won my diploma in 1968 in the Electrical Engineering School of the Budapest Technical University. In this same year I went to the BHG Communications Engineering Enterprise where I was active as a development engineer and then as a chief designer. At present I am product director of the enterprise. My theme area is switching technology and operations and maintenance systems. I obtained my title of university doctor in 1981.

BIBLIOGRAPHY

1. Englert, V., Gatmezei, J. and Peszleg, J.: "Service Supervision of Telephone Exchanges by Stored Program Controlled Equipment," BUDAVOX TELECOMMUNICATION REVIEW, No 1, 1984.

2. Eisler, Peter, Dr: "Program Controlled Equipment for Maintenance of Telephone Exchanges," AUTOMATIZALAS, No 1, 1985.

3. Eisler, Peter: "Computer Controlled Systems for Automatic Message Accounting and Effective Network Management," Inteltelec Symposium, Jakarta, 25-29 March.

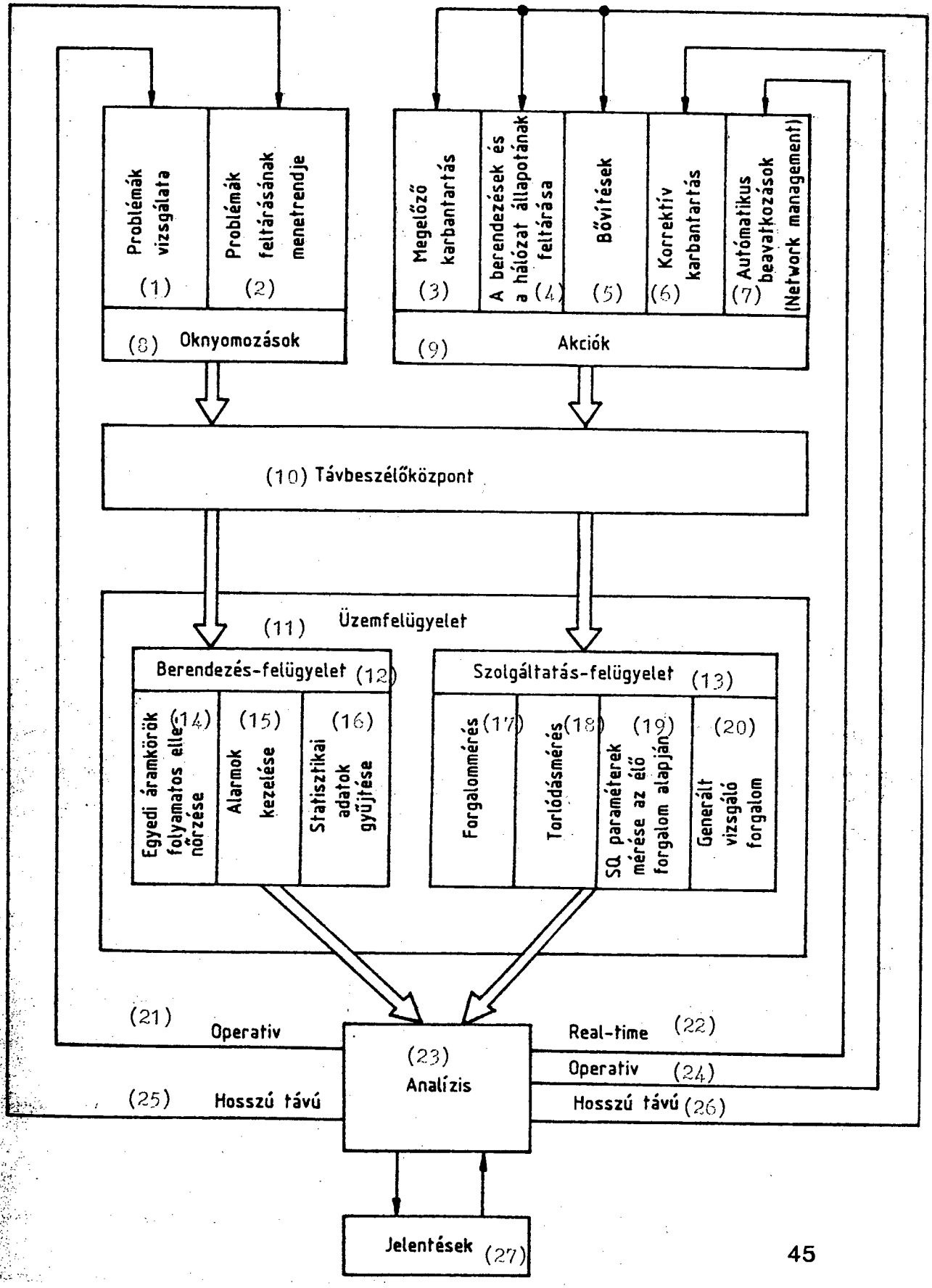

45

1. ábra Figure 1. LOTRIMOS

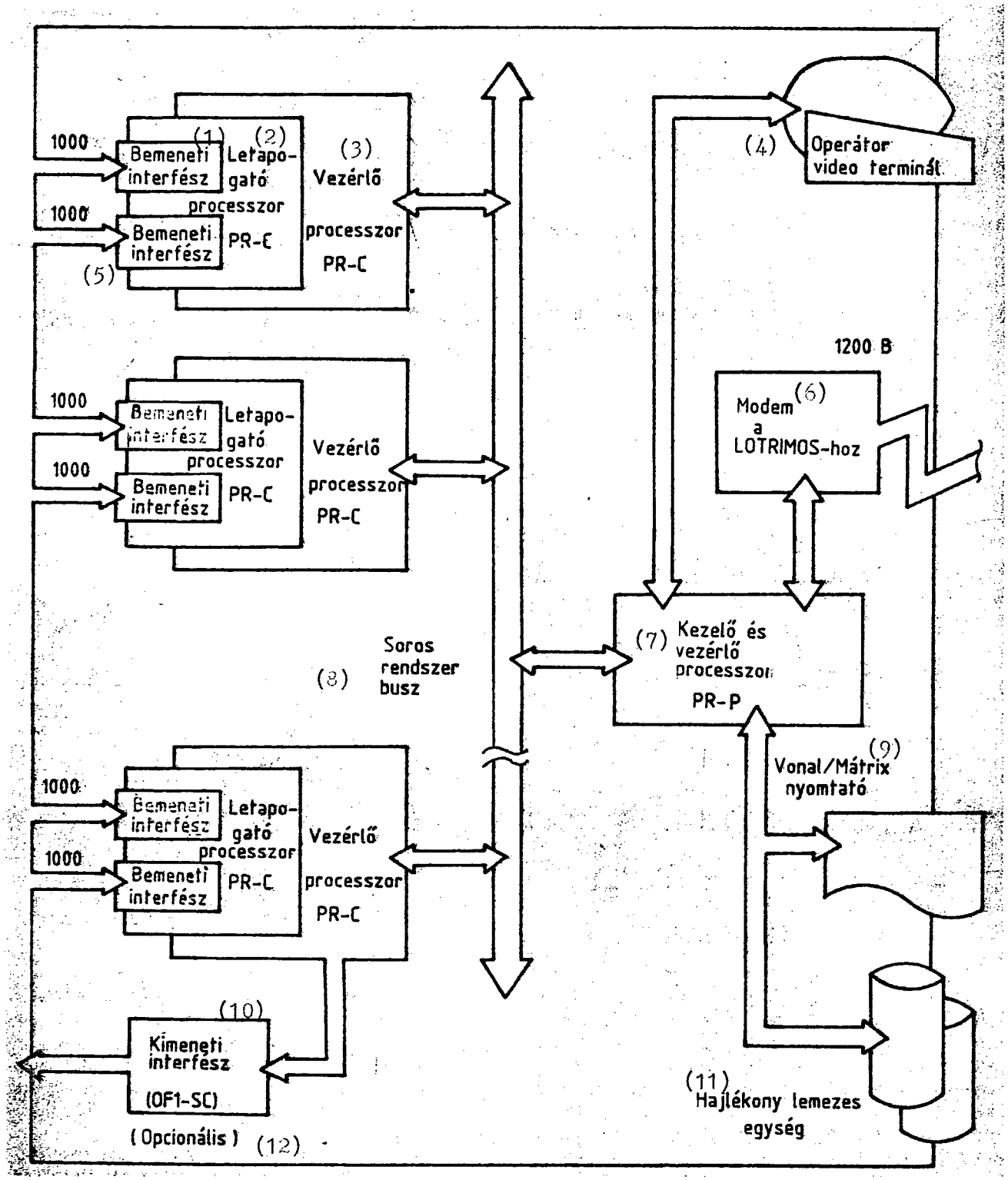

2. ábra Figure 2. LOTRIMOS

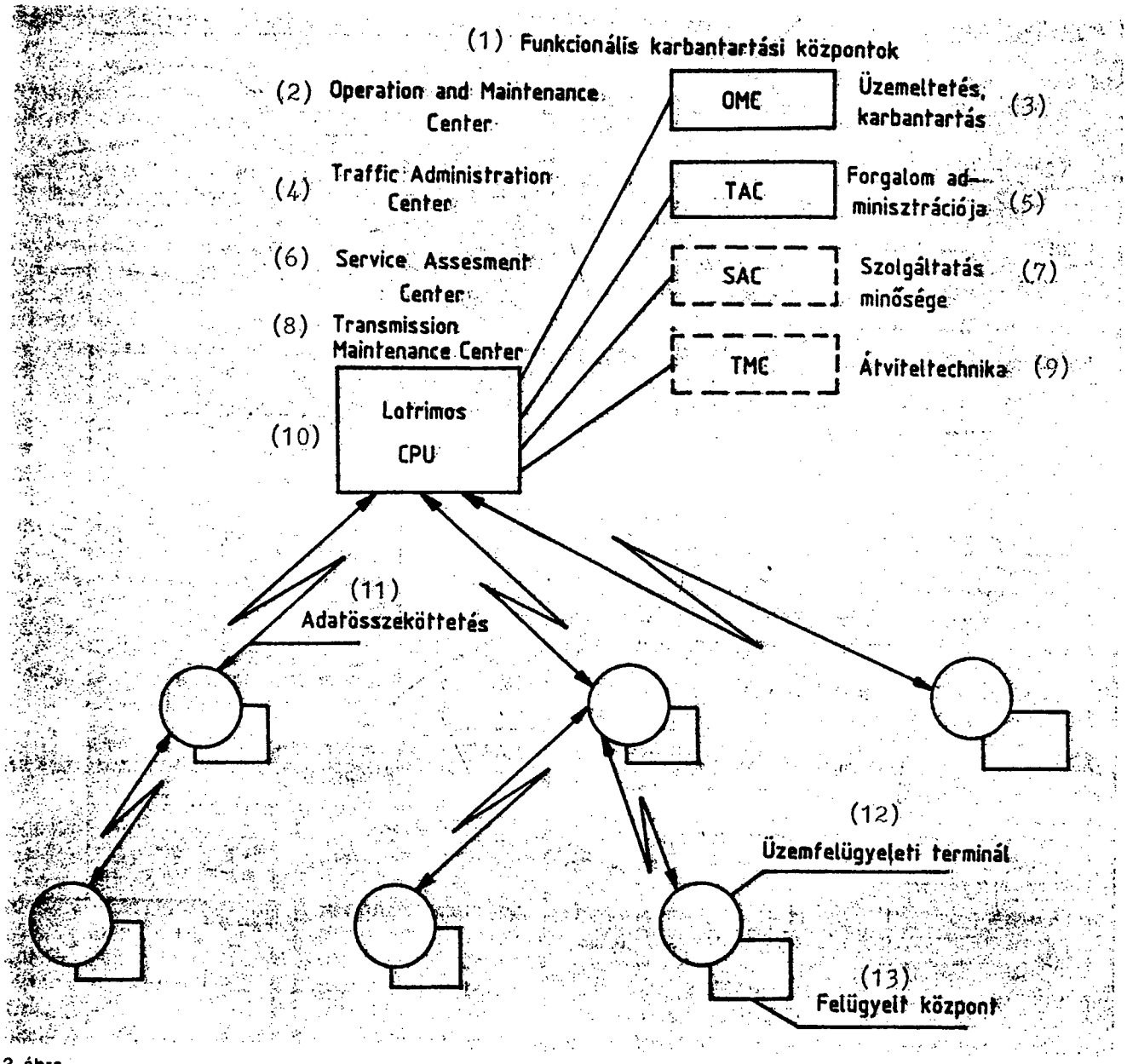

3. ábra

Figure 3. LOTRIMOS

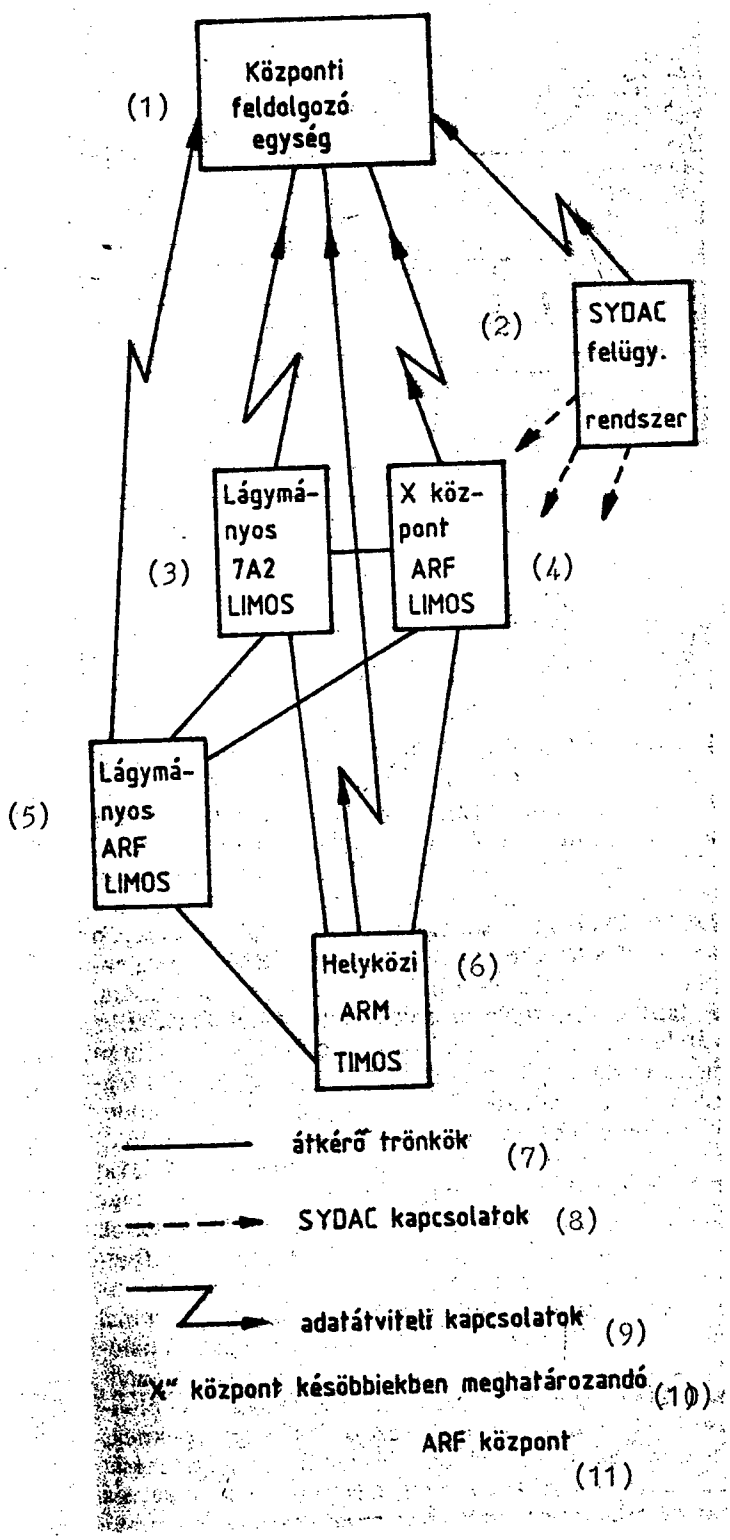

4. ábra Figure 4. LOTRIMOS

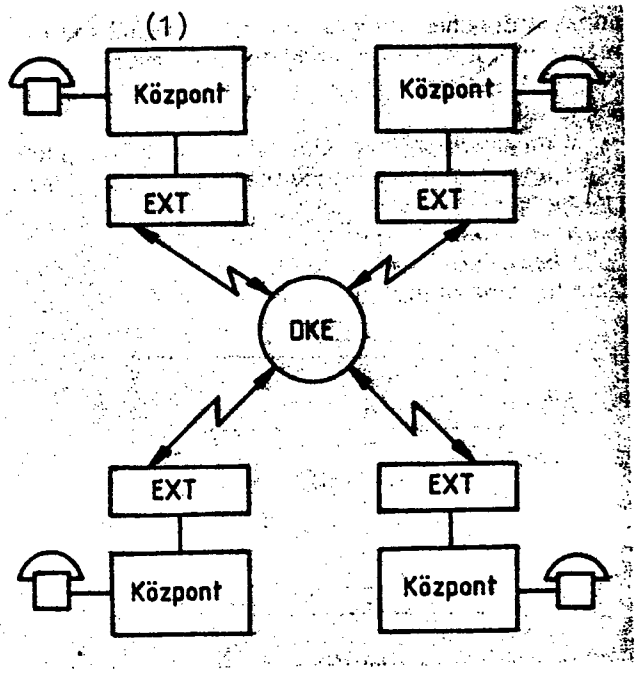

5. ábra Figure 5. LOTRIMOS

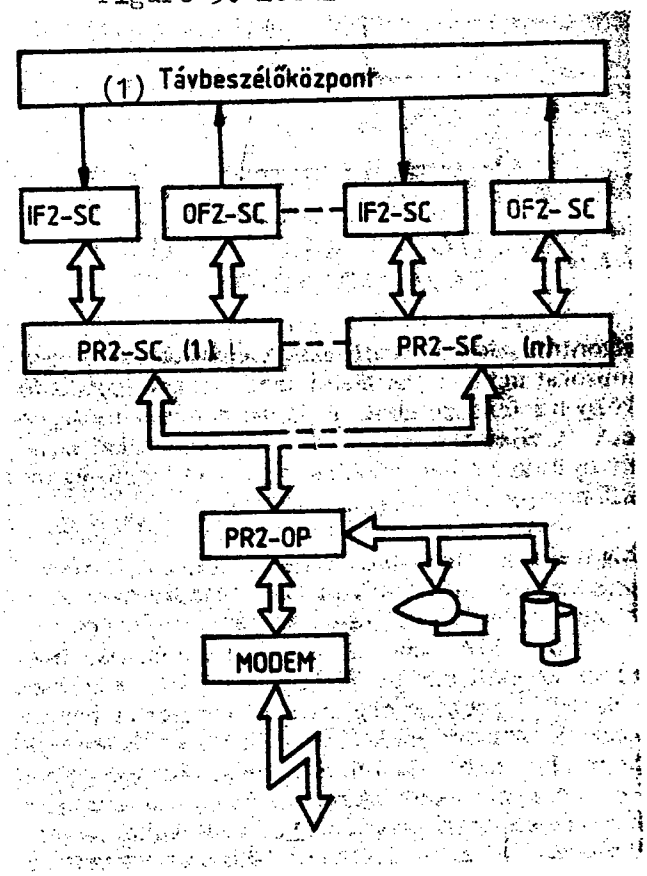

6. ábra Figure 6. LOTRIMOS

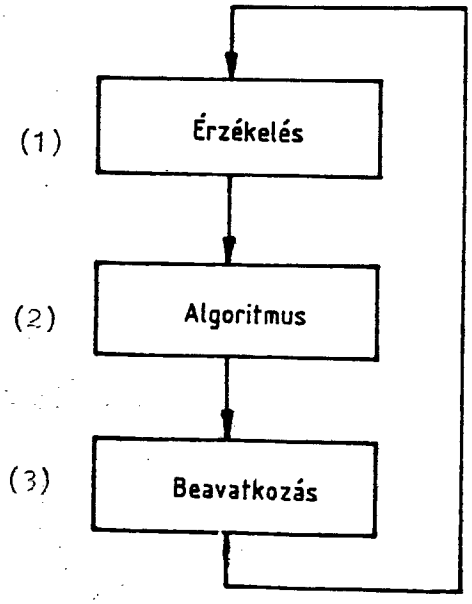

7. ábra Figure 7. LOTRIMOS

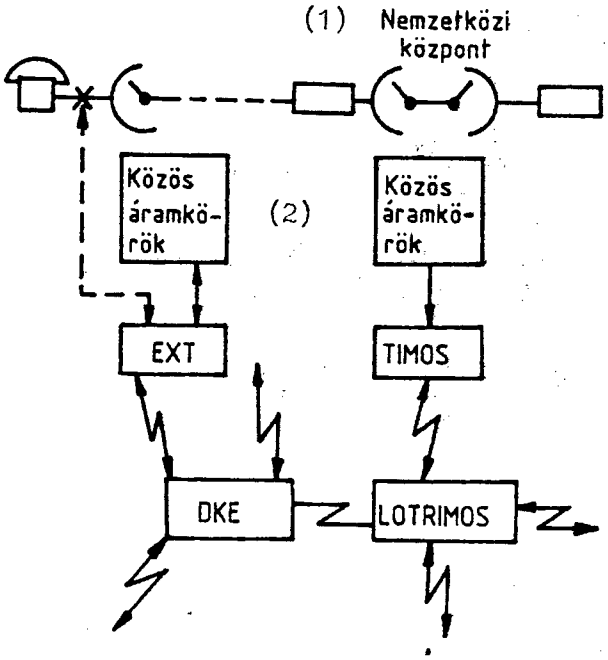

8. ábra Figure 8. LOTRIMOS

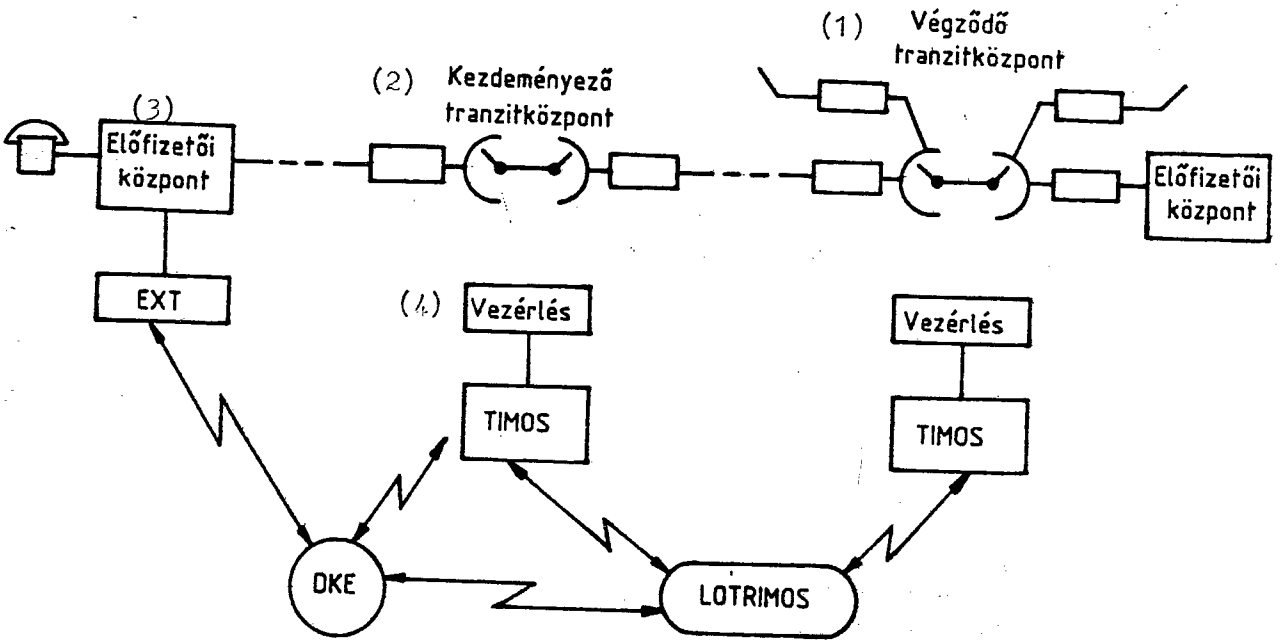

9. ábra Figure 9. LOTRIMOS

KEYS

1. p 45. Figure 1.

1. Study of problems
2. Schedule for discovering problems
3. Preventive maintenance
4. Discovering state of equipment and network
5. Expansions
6. Corrective maintenance
7. Automatic interventions (Network management)
8. Pragmatics
9. Actions
10. Telephone exchange
11. Operations monitoring
12. Equipment monitoring
13. Service monitoring
14. Continual checking of individual circuits
15. Management of alarms
16. Collection of statistical data
17. Measuring traffic
18. Measuring congestion
19. Measuring SQ parameters on basis of traffic
20. Generated study traffic
21. Operational
22. Real-time
23. Analysis
24. Operational
25. Long-range
26. Long-range
27. Reports

2. p 47. Figure 2.

1. Input interface
2. Scanning processor PR-C
3. Control processor PR-C
4. Operator video terminal
5. Input interface
6. Modem to LOTRIMOS
7. Management and control processor
8. Serial system bus
9. Line/matrix printer
10. Output interface (OF1-SC)
11. Floppy disk unit
12. (optional)

3. p 48. Figure 3.

1. Functional maintenance centers
2. Operation and maintenance center
3. Operations, maintenance
4. Traffic administration center
5. Traffic administration
6. Service assesment center
7. Quality of service
8. Transmission maintenance center
9. Transmission technology
10. LOTRIMOS CPU
11. Data links
12. Operations monitoring terminal
13. Monitored exchange

4. p 49. Figure 4.

1. Central processing unit
2. SYDAC monitoring system
3. Lagymanyos 7A2 LIMOS
4. X exchange ARF LIMOS
5. Lagymanyos ARF LIMOS
6. Interurban ARM TIMOS
7. Transit trunks
8. SYDAC connections
9. Data transmission connections
10 and 11. The "X" exchange is an ARF exchange to be decided on later

5. p 49. Figure 5. 1. Exchange

6. p 49. Figure 6. 1. Telephone exchange

7. p 50. Figure 7. 1. Sensing 2. Algorithm 3. Intervention

8. p 50. Figure 8. 1. International exchang 2. Common circuits

9. p 51. Figure 9.

1. Terminating transit exchange
2. Initiating transit exchange
3. Subscriber exchange
4. Control

8984
CSO: 2502/70

EAST EUROPE/MICROELECTRONICS

TEXT COMMUNICATIONS SERVICES PLANS SEVENTH 5-YEAR PLAN

Budapest MAGYAR ELEKTRONIKA in Hungarian No 3, 1986 pp 107-109

[Article by Ivan Feczko, deputy director for technical development, Postal Central Telegraph Office: "Research-Development-Manufacture; The Post Office's Plans in the Area of Text Communications Services (Telegraph, Data Transmission, Telematics) in the Seventh 5-Year Plan"]

[Text] Text Communications Services

The Post Office's plans in the area of text communications services (telegraph, data transmission, telematics) in the Seventh 5-Year Plan.

Text communications services are parts of the telecommunications services of the Post Office. In addition applications, the system of tools for the services and linking them to other telecommunications tools are well defined; telegraph technology, data transmission and telematics figure independently in the international standards (CCITT) pertaining to telecommunications.

The Hungarian Post Office creates its telecommunications services and networks according to the CCITT standards. The presently defined text communications services are, in more detail, the following: telex, telegram forwarding, data transmission, message handling (Message Handling System), and the telematics services--teletex, videotex and facsimile.

Under domestic conditions the foregoing services will be built on the following public telecommunications limits in the present plan period and presumably in the following ones: the telegram network or data transmission network (line switching, packet switching and leased line), connected telephones and direct telephone channels.

The several services use one or more networks. (Telex uses only the telegraph network, but videotex also uses the connected telephones and the data network.)

By linking the various networks the Post Office makes possible cooperation among the several services (not all of them)--in accordance with international standards--e.g., telex and teletex. Among the networks the telegraph network

and the data network are networks created for text communication and their service and technical characteristics are developed accordingly.

Because of its relatively high degree of dispersal use of the telephone network for data transmission is advantageous where the less favorable data transmission characteristics of the network (more limited speed, a long time to build up a connection, a less favorable error ratio, lack of a data transmission maintenance system) make this possible.

The basic tools needed to offer the services mentioned are the following:

--telegraph and data transmission line switching centers,
--packet switching centers and tools to activate synchronous terminals (PAD),
--videotex service centers,
--telecommunications service centers for message handling systems,
--devices for conversion between networks and services,
--network synchronizing devices;
--individual and multiplex data transmission tools, a broad assortment of concentrators which, in part, can be the same for various networks,
--tools to connect individual terminals (Network Control Units);
--a network monitoring and control system,
--testing and measurement devices;
--a record keeping, error reporting and information system supporting operations;
--end equipment for users (telex, teletex, videotex, facsimile and TAF [remote data processing] terminals and computers).

The transmission equipment operates on the local and interurban circuits of the basic telecommunications network. The telegraph and data transmission switching technology tools (centers) and the end equipment operating in the several services (e.g., teletype and data terminals) are connected to the telegraph or data-transmission transmission equipment.

At present and for some time to come--on the basis of traffic, postal receipts, and the value of postal equipment participating in the service--the customers for text communications services in Hungary come primarily from the economic and guidance sphere and to only a small extent from the sphere of the populace.

The number of telex, data transmission and telematic terminals in the world does not reach even two percent of the number of telephones. This ratio illustrates the degree of such use of the basic network.

In the case of a connected telephone network data station the use is a double one. The channel capacity need of a data subscriber is smaller than that of speech information, even in the case of the present analog basic network, but especially in the case of a digital basic network several telegraph or data transmission channels can be established on one transmission channel designed for speech. But in addition to all this the specific investment cost for a data or telex station (telegraph and data-transmission transmission technology, switching technology) is greater than in the case of a telephone.

The Present Situation and the Goals

In Hungary also the creation of an integrated digital data network (IDA) meeting international standards and the ever greater satisfaction of telematic needs is considered a goal to be reached by the telegraph and data transmission service. The first step in this was putting into operation an electronic telegraph and data transmission switching center and the network belonging to it (NEDIX 510-A).

In addition to IDA there will continue to be a need for use of the connected telephone network primarily in the case of the videotex and facsimile services and in the case of other interactive applications in addition to videotex. The most significant next domestic phase of modernizing the telephone network will be creation of an integrated digital telephone network (IDTH). Naturally the Hungarian Post Office will produce compatibility between IDTH and IDA.

Telex is a completely automated network; its Budapest center is electronic with stored program control. Development will be represented by a gradual replacement of the obsolete provincial centers, gradual use of time sharing transmission technology and more modern terminals.

The Budapest center of the line switching data network is common with telex. We will expand the service introduced in the plan period, we will create a provincial center and we will install multiplexors in additional county capitals. The expansion will be significant, but it will not be possible to completely satisfy the needs.

Creation of a packet switching network and its international center and of a network control center figures in our plans as a national, operational system of moderate size. We are conducting technical and applications experiments on the experimental system created in preparation for the service by the MTA SZTAKI [Computer Technology and Automation Research Institute of the Hungarian Academy of Sciences] (and already installed at the Post Office's Central Telegraph Office, a center based on a TPA-70 minicomputer and a PAD based on an MS 600 microcomputer).

The Post Office will open a teletex service on the line switched data network. First we will conduct applications experiments with the teletex terminals obtained with OMFB [National Technical Development Committee] support. In the synchronous divisions of the data network we will create a connection first with the German Federal Post, probably at the end of 1986, primarily in the interest of teletex. We plan to realize cooperation of telex and teletex in the first half of the plan period.

The Hungarian Post Office, in cooperation with the OMFB, has decided to create an experimental public videotex service and to acquire a system for this purpose suitable for operational use which can be expanded in volume and services. The system will contain a VTX service center, data transmission equipment, videotex terminals and the possibility of connecting to outside computerized information services. Bids in response to a request for bids to provide the system arrived at the end of 1985. We plan to sign the contract in the first half of 1986 and to start the service in 1987. The system will use

the CEPT display adopted by the postal directorates of 26 European countries and figuring as a CCITT standard.

The Post Office opened a postal facsimile service in 1986, domestically and with an experimental character, in five provincial and two Budapest post offices. An international extension will take place in 1986. Subscribers can purchase sets offered by the Post Office and can use them on the connected telephone network after postal installation.

Acquisition and Development of Equipment

The tools needed for the development of text communication services are of many types and acquisition of them also varies due to the varying degree of complexity and the differing quantitative needs.

Few manufacture line switching and public network packet switching data transmission centers, conversion devices or message handling systems because of their high technological level, high reliability, extraordinarily large developmental expenditure and relatively small market demand. Setting up for domestic manufacture is unrealistic for virtually all of the devices belonging here. We have started experiments with a small system based on domestic research and development achievements in the area of packet switching. This was not made for public network use, but in addition to preparing the Post Office and users it will help determine the sphere of domestic devices which might be used in a packet switching network.

The largest part of telegraph and data transmission individual or multiplex equipment is less complicated and is needed in substantially larger numbers than the centers. They provide a much greater proportion of the value of the complete network than the centers, especially as the number of subscribers grows. In addition domestic industry is already capable of manufacturing the necessary transmission equipment or equipment similar to it. In the area of telegraph technology the Telephone Factory and the ELKISZ and Elektronika cooperatives are traditional suppliers to the Post Office.

In the interest of developing the transmission system for text communication services, defining the basic network connections and preparing for domestic manufacture of some of the necessary data transmission equipment the Post Office, bringing in postal, research institute and industrial experts and making use of the experiences obtained on the line switching data network, has prepared a comprehensive plan titled "A Transmission Technology System With a Complex Approach for the Telegraph and Data Transmission Service."

The specifications for the equipment to be developed within the framework of this have been or are being prepared. As a prototype there already exists in the line switching data network a 4,800 or 2 x 2,400 bit per second subscriber speed dual port analog intended to be used in place of the present import (the import connects one subscriber and has two sorts of modem). The domestic one was developed by Videoton. There is also a network control unit (NCU) for data network connection of end equipment which meets the CCITT series V standards which is suitable for both synchronous and asynchronous connection and by using it only one type is needed for terminals in accordance with the CCITT X

and V series standards. The developer is the GENERAL-PLAN small cooperative, where they also make the DAT-1 error ratio meter and protocol tester which can already be obtained on the market. The goal is to begin manufacture, prepare specifications for the other equipment, find a developer-contractor and physical integration of the individual data transmission network elements into a uniform design. Selection of the uniform design has been made, but the conditions for assembly do not yet exist.

For a larger part of the text communication services the terminal itself is an element of the entire service, because the Post Office must guarantee compatibility within the same service for any subscriber, or must guarantee access to a service. For this reason it is the task of and in the interest of the Post Office to participate in the development of the terminal to be connected to the networks in this case and to initiate development in the case of new services.

In the area of the telex service, as an independent initiative and with the cooperation of postal experts, we have the TXC-2000/8 telex computer which the TRITON Computer Technology and Telecommunications Small Cooperative developed from elements of a professional personal computer. The device will be available in 1986.

In order to further the spread of the teletex service the OMFB, the Ministry of Industry and the Hungarian Post Office are supporting the development of a domestic teletex terminal within the framework of a competition.

The videotex modems (postal equipment) to be used in the videotex service and various videotex terminals represent primarily the devices requiring domestic development. One can expect a demand for videotex systems within an enterprise and for connection of these to the public videotex network.

The line switching data network is advantageous for both users and the Post Office if the connections are realized according to the CCITT series X standards, so we consider developments in this direction useful. The developmental goals will be realized partly with postal and partly with enterprise financing and a number of the developmental goals figure in the OKKFT [National Medium-Range Research and Development Plan] program G1 for the Seventh 5-Year Plan.

8984
CSO: 2502/70

EAST EUROPE/MICROELECTRONICS

HUNGARIAN AUTOMATIC TESTING EQUIPMENT FOR SOVIET TV

Budapest MAGYAR ELEKTRONIKA in Hungarian No 3, 1986 pp 52-57

[Article by Peter Mahr: "The USzCT TV Automatic Testing Equipment." Footnote: "The abbreviation USzCT is a CEMA standard abbreviation for Universal Standard Color Televesion Set." The following note is given under the title: "Development of an automatic TV testing device has begun at the Communications Engineering Cooperative at the request of Soviet television set manufacturers. The development has reached a phase where we can report to our readers about the large project."]

[Excerpt] Development of an automatic module testing device for Soviet USCT television receiver sets began first in our cooperative in the summer of 1984 in the course of a number of preparatory talks. The development is being realized in a number of steps, considering the great complexity of the device. In the first step the task is testing of the MC-2 color module, but at this stage of development one must think of what the basic structure of the automatic device should be so that testing of additional modules will be possible by exchanging or expanding the test program, the technological connections, etc.

In the interest of reducing development time maximum use had to be made of already finished, accepted products, parts and procedures within the cooperative.

Testing automation can be divided essentially into two large areas, the universal--multi-purpose--automatic testing devices and special--goal oriented--automatic testing devices made for individual tasks in industrial manufacture or product checking. The equipment developed by our cooperative belongs in the latter category.

The basic requirements made of the automatic testing equipment are the following:

--testing and aligning about 1,000 modules per day,
--simple operation,
--abbreviated documentation of the testing results on good modules,
--storing statistics prepared on daily production in a secure, uninterrupted memory and forwarding them to the central computer of the factory,

--maintaining the possibility of testing other USCT modules later,
--considering the requirements made of the device thus far, exclusive use of microprocessor testing controls,
--swift exchange of the technological connections and of the ROM unit storing the test programs for switching to the testing of other types of modules,
--ensuring good morale of operating personnel from the ergonomic viewpoint, in addition to a pleasing design, including the total effect of colors, arrangement of operating controls, etc., and
--ensuring the possibility of dismantling (into main pieces) and easy and fast assembly at the site, in order to facilitate shipping.

We can review the structure according to units of version "A" (the short name of the version being made to test the MC-2 color module) of the device with the aid of Figure 1. It can be easily seen from the figure that two main units make up the entire device--the assembled cabinet, which is 20 modules high, and the test table, before which the operating personnel work.

We can see the mechanical layout of the device in Figure 2. In the figure we have numbered the chief instrument units placed in the assembled cabinet and on the test table. Let us list them and describe their chief characteristics.

Service Units

These contain the automatic fuses, magnetic switch and network connector sockets. Network power is obtained via the ventillator unit to make sure that the higher units will get power from the connector socket only if cooling is operating. Four fans cool the assembled cabinet.

Control and Test Unit

Above the control and test unit there will be an additional test unit box making possible later expansions. Now it is sufficient if we describe only the control and test unit in the present version. The electrical structure of the unit can be seen in the block diagram in Figure 3.

The control and test unit frame consists of two parts, as appears from its name. One part receives the units needed for control of the testing, in a width of 7/18. These units (CPU, RAM, ROM, video display generator, line printer and keyboard interfaces, central unit interface) consist of HT 680X elements and are connected to a bus which is standard for HT 680X. The rest of the frame, 8/18 wide, receives the units performing the measurement.

The signal generators belonging to the "A" version and the A/D converters can be located in this measurement execution unit.

The coupling between the measurement control bus system and the measurement execution bus system takes place in the control and test unit frame through the measurement execution coupling unit.

The measurement execution bus system has 256 addresses (in the EDDO-EDFF range). This address range is divided up among four ports; that is, each port has 64 addresses. The measurement execution units are connected uniformly to the bus by a 6821 PIA LSI, thus each measurement execution unit occupies four addresses; that is, 16 signal generators or signal processing devices can be connected to one port, so the total is 64. This quantity is sufficient for further expansions. The two bus systems have separate power supplies.

The test unit frame (the part surrounded by the dashed line in Figure 3) is suitable exclusively for receiving measurement execution units. Its back bus system has sixteen 86 pole panel connection sockets and was made to receive the measurement execution units needed to test additional modules. It has independent power units and maintains contact with the measurement execution interface through a 25 pole PIA coupling (standard for HT).

The control and test unit receives the measurement execution units needed for the "A" version; these will be described later.

Module Power Unit

This provides power to the module to be tested. It has its own microprocessor. Its task is very complex. As the first step in testing every module the module power unit decides whether the current taken up by the module to be measured falls in the tolerance range. The power is fed to the module in a maximum of 256 steps--programmable--while the unit measures and stores the value of the current belonging to the voltage step. It protects faulty modules from catastrophic destruction and in the case of a good module the "permission" of the module power unit is needed to continue the testing. The module power unit is a unit three modules high and 18/18 wide which, in the "A" version, contains three drawers 4/18 wide, one processor control unit and two power drawers.

Peripherals

Keyboard

In the interest of faster testing and easy operability the device is supplied with a special keyboard. The keyboard makes it possible to start and stop the testing, calibrate the equipment, put in the date and time and choose among various measurements. Some of the push buttons can be retested with a key switch.

Display

In the "A" version we use a TV 18-21.1 black-white monitor, but later it will be possible to use a commercially available color television receiver supplied with a teletext decoder.

Printer

We use the printer of the commercially available ELKA 55 Bulgarian desktop calculator, which only prints numbers. (It is manufactured by the Bulgarian firm on an EPSON license.) The abbreviated test results of good modules are printed out on it.

Technological Connections

The MC-2 color module consists of two main mechanical parts. A so-called sub-module is also attached to the base panel. At the wish of the Soviet customer it had to be possible to test the sub-module and the completely assembled module separately. So the technological connection (hereinafter TC) performs the mechanical gripping and electrical connection for both units. The TC can be exchanged if they switch to testing of a different type of module. Under the TC is a printed circuit panel containing the matrix or interface circuits. If the TC is exchanged, naturally, these circuits are exchanged also. One connects to the panel underneath the TC the cables of the measurement execution bus from the measurement execution interface and the cables of the video signal generator and of the A/D converter, at an impedance of 75 Ohms, the cables from the module power unit to supply power to the module or sub-module, and the lines supplying power to the coupling circuits, from the power unit under the table. For safety reasons the module must be covered with a transparent (plexi) shield during testing. Without it the testing cannot start. At Soviet request the module must be connected to a television set located beside the testing device after completion of testing so that the operation of the module can be examined from the screen also.

The Test Table Power Unit

The test table power unit supplies power to those circuits in the test table which it was not appropriate to supply with power from the assembled cabinet.

After describing the larger independent units let us turn to a brief description of the mesurement execution units used in the "A" version. The measurement control part is made up of elements of the HT 680X computer. These are the CPU, RAM, ROM and central computer interface. We will not talk about them; detailed descriptions of the units have been prepared.

Line Printer and Keyboard Interfaces

There are two units in the measurement control part the development of which began in connection with the automatic testing device. We are talking about the keyboard and line printer interface and the video display generator.

The unit carries out a triple task:

--it connects the HT 680X microcomputer to the ISOT model 310 line printer mechanics,
--it is capable of watching the status of a keyboard consisting of at most 16 keys, and
--it has a clock and memory which operate even when switched off.

Printer Interface

The functions of the printer interface are:

--motor start signal (output),
--main axis position signal (input),
--code disk signal (input),
--positioning magnet control signal (output), and
--red print control signal (output).

A software procedure provides the time diagram for printer control through an MC 5621 programmable, parallel interface unit.

Keyboard

The keyboard interface is suitable for observing a keyboard output taken to a plus 5 volt power voltage at a maximum of 10 K Ohms operating with a maximum of 16 Hall effect or mechanical contacts. Reading in is done with the aid of an MC 6821 programmable, parallel interface unit the functions of which (selecting observed key, coding out chatter, etc.) are determined by a software procedure.

Clock Generator

An MC 146818 small consumption (CMOS) LSI circuit provides the clock function. It is connected to the HT 680X bus through an MC 6821 programmable, parallel interface unit. This latter serves the MC 146818 as 64 bytes of RAM of which 14 bytes provide the clock functions (year, month, day, hour, minute, second) and the remainder can be used by the system to store 50 bytes of information which will be preserved even when the system is turned off.

If a plus 5 volt supply voltage exists the MC 146818 is supplied with power from the supply voltage level of the bus; in the turned off condition it is supplied by a chargeable battery which can be found on the panel.

A quartz oscillator with a frequency of 32,768 Hz controls the clock generator. In the turned off condition the clock will operate for a minimum of 100 hours (and it stores the system parameters put in).

Video Display Generator (VDG)

It is useful to use the video display generator when one must repeatedly display images in which there are relatively few changing parts (e.g., tables, blank forms, etc. providing information or to be filled in).

The VDG can store a maximum of 48 types of figures (blank forms), one of which it puts on the screen. A changing part (e.g., test results) can be placed on at most 24 places on one figure. A changing part can consist of at most 16 alphanumeric characters.

A figure consists of 24 character lines and 40 character columns. The VDG provides black-white compound video signals. During vertical blanking time the image displayed is given in the form of data signals also so that if the display is a color receiver set with a teletext decoder one can get color pictures also.

The unit has an independent microprocessor (MC 6800) and it maintains contact with the central unit of the HT 680X computer with byte sequential transmission realized through a PIA. The eight registers of the VDG can be placed anywhere in the memory area of the HT 680X (at small place values with 0-7 or 8-F terminations) and they keep the selected address area permanently occupied. The capacity of the program store is a maximum of 8 K bytes, the capacity of the data store is a maximum of 48 K bytes EPROM plus 2 K bytes SRAM.

Measurement Execution Units

Video Signal Generator

The video signal generator provides a compound video signal to perform various measurement and test tasks. In the generator the production of the video signal is possible by reading data from RAM, by D/A conversion of data and by interpolation of sample values. The fast RAM of the generator can store data corresponding to 16 TV lines. Any stored TV line signal within a TV picture can be called into any running TV line.

In the generator reading from memory takes place synchronously with the TV line frequency. For this reason the generator is especially suitable for producing SECAM standard color video signals.

The generator has an independent processor (MC 6800) and elementary signal library. Frequently needed test signals can be put into the library--in their entirety or in their elements. The processor is capable of compiling test signal data blocks from the library independently. If a special signal is needed the fast RAMs can also be loaded from outside.

Synchronizing Generator

The synchronizing generator provides all the basic signals needed for the module to be tested and for system timing (color aiding carrier frequencies--PAL, SECAM--and line frequency and picture frequency). These go to the various units on the connections of the measurement execution bus. We produce the basic signals and other functions not mentioned here with an HTM 001 user designed circuit.

Special TV Signal Generator

Operating or testing an MC-2 color module requires a few special signals which this unit produces. These signals are: vertical fly-back, horizontal fly-back, sand-castle pulse and programmable DC voltage.

A/D Converter

The A/D converter is suitable for measuring the high frequency signal within a TV line with the aid of a peak detector, for measuring the level of a sampled video signal and for DC voltage measurement, all in programmed form.

It has its own microprocessor and a memory area of 8 K bytes RAM and 8 K bytes EPROM, which includes its own program area and its work area. Its own program provides maximum and minimum search, summing and averaging. In the case of the maximum test number programmed in (256) we get a total of 2,048 measurement results--if we measure in all 256 lines in all eight frames. Since the measurement results are 2 bytes long this takes 4,096 bytes of memory.

For some measurements a sample must be taken at a given time (within a line), a peak must be detected at a given time and the A/D converter started, etc. In such cases the predesigned program can be burned into PROM and the processor reads the timing program for the given measurement out of the PROM.

The A/D drawer maintains contact with the test control with byte sequential data transmission through the PIA. The A/D test cycle starts at the GET signal, if the image conversion signal follows the GET signal at more than 5 ms. If an image conversion signal can be found within 5 ms after the GET signal is generated then the measurement starts only at the following image conversion signal. This ensures complete closing of the switching matrix, which also happens at the GET signal and takes place during about 2-3 ms.

Ideas for the Future

Development of the first version of the USCT automatic TV testing equipment is drawing to a close, the prototype will be shown during the summer. Others will be needed after the version now developed.

Autobiographic Note by Peter Mahr

I obtained my electrical engineering training at the Kalman Kando Technical College in 1971. I have been working at the Communications Engineering Cooperative since 1968. At present I and several of my colleagues are working on the testing automation program. My favorite free time activities are fishing and gardening, which I indulge in with my family--my wife and two sons.

BIBLIOGRAPHY

1. Radnai, Rudolf: "Automatic Testing Instruments and Systems," Technical Book Publishers, Budapest, 1981.

2. Radnai, Rudolf: "Automatic Product Control in Electronics," Technical Book Publishers, Budapest, 1984.

3. "Automatic Data Processing Handbook," McGraw Hill, 1977.

4. "Measurement Concepts in Automated Testing Systems," Beaverton, 1967.

5. Omatszkij: "Automatic Testing Instruments," Technical Book Publishers, Budapest, 1967.

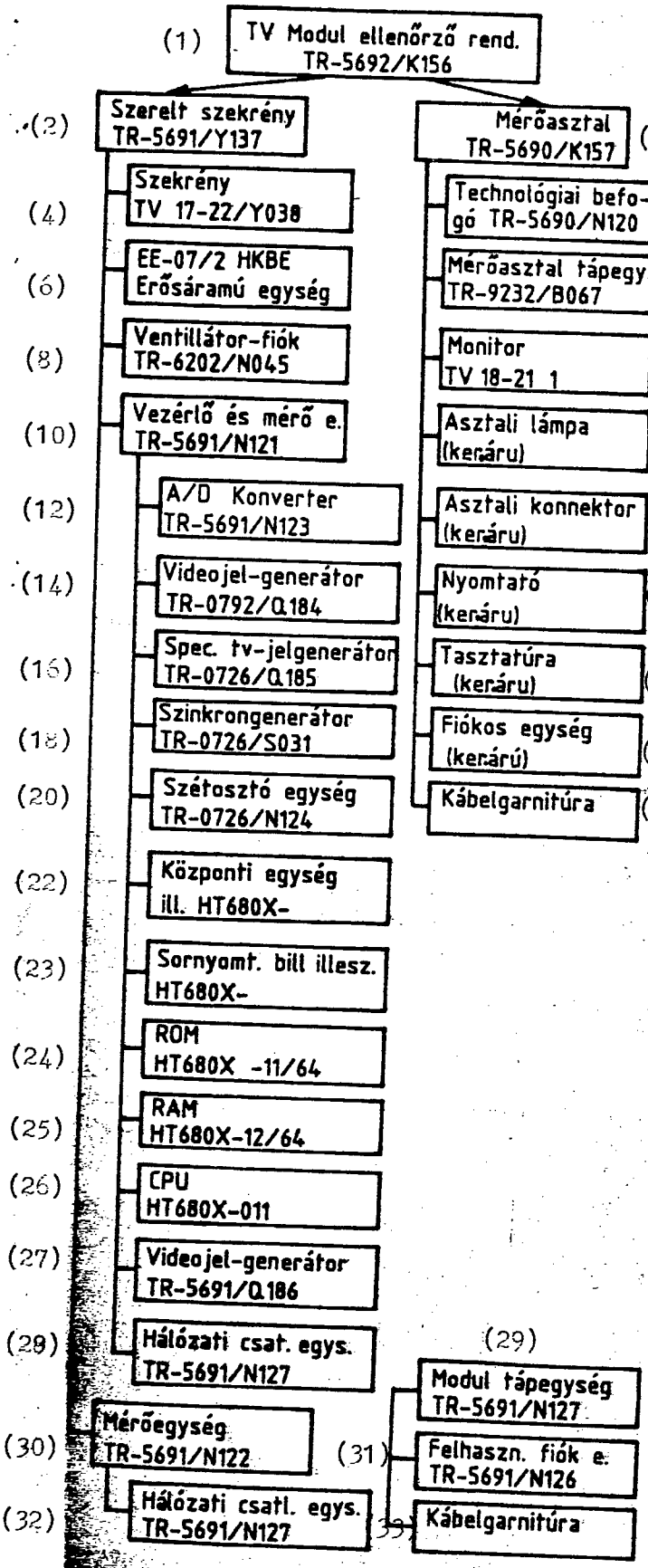

Table 1. TV testing equipment
1. ábra Mérőautomata "A" változatának egységei

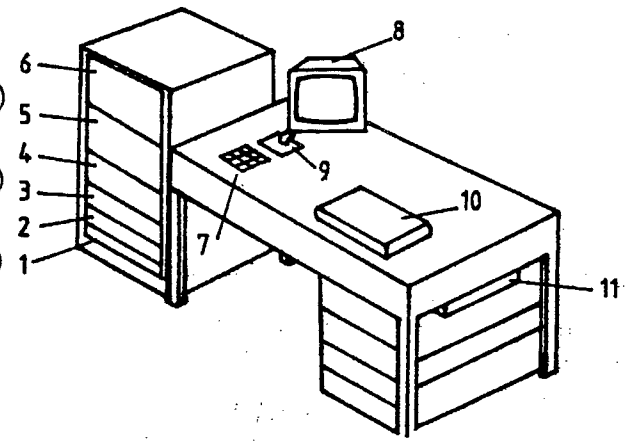

1,2 – kiszolgáló egységek
3 – vezérlő és mérőegység
4 – mérőegység-doboz
5 – modul tápegység
6 – felhasználói fiókegység
7 – billentyűzet
8 – kijelző
9 – sornyomtató
10 – technológiai befogó
11 – mérőasztal tápegysége

Figure 2. TV testing equipment
2. ábra Mérőautomata mechanikus felépítése

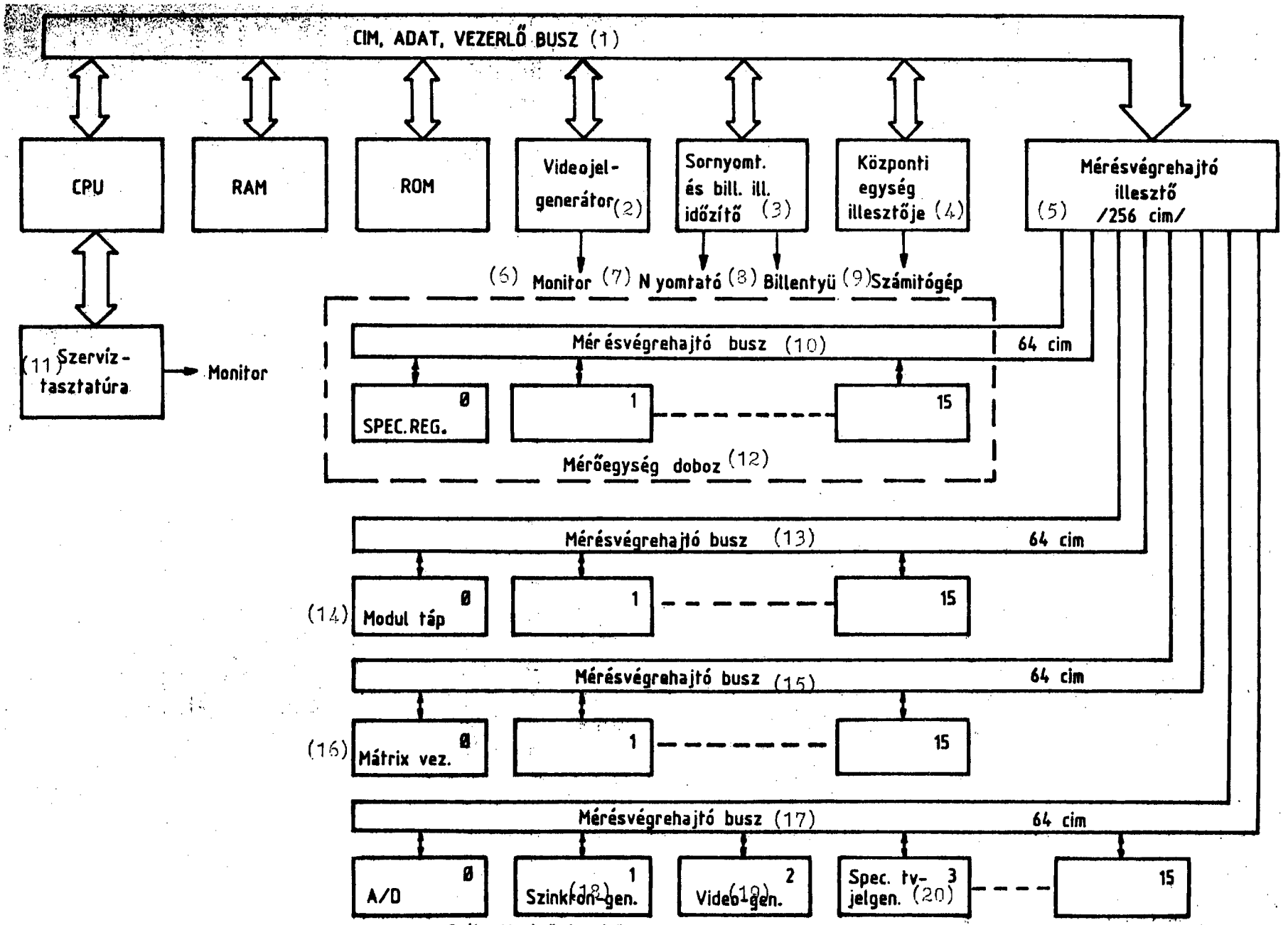

3. ábra Vezérlő- és mérőegység elektromos felépítése

Figure 3. TV testing equipment

FIGURE CAPTIONS AND KEYS

1. p 53. Figure 1. Units of the Testing Equipment, Version "A".

1. TV module testing system, TR-5692/K156
2. Assembled cabinet TR-5691/Y137
3. Test table TR-5690/K157
4. Cabinet TV 17-22/Y038
5. Technological connection TR-5690/N120
6. EE-07/2 HKBE heavy power unit
7. Test table power unit TR-9232/B067
8. Ventillator drawer TR-6202/N045
9. Monitor TV 18-21 1
10. Control and test unit TR 5691/N121
11. Table lamp (commercial)
12. A/D converter TR-5691/N123
13. Table connector (commercial)
14. Video signal generator TR-0792/Q184
15. Printer (commercial)
16. Special TV signal generator TR-0726/Q185
17. Keyboard (commercial)
18. Synchronizing generator TR-0726/S031
19. Drawer unit (commercial)
20. Distributing unit TR-0726/N124
21. Cable set
22. Central unit HT 680X
23. Line printer key interface HT 680X
24. ROM HT 680X-11/64
25. RAM HT 680X-12/64
26. CPU HT 680X-011
27. Video signal generator TR-5691/Q186
28. Network connection unit TR-5691/N127
29. Module power unit TR-5691/N127
30. Test unit TR-5691/N122
31. User drawer unit TR-5691/N126
32. Network connection unit TR-5691/N127
33. Cable set

2. p 53. Figure 2. Mechanical Structure of Automatic Testing Equipment

1, 2. Service units
3. Control and test unit
4. Test unit box
5. Module power unit
6. User drawer unit
7. Keyboard
8. Display
9. Line printer
10. Technological connection
11. Test table power unit

3. p 55. Figure 3. Electrical Structure of Control and Test Unit

1. Address, data, control bus
2. Video signal generator
3. Line printer and keyboard interface and timer
4. Central unit interface
5. Measurement exec. interface (256 addresses)
6. Monitor
7. Printer
8. Keyboard
9. Computer
10. Measurement exec. bus (64 add.)
11. Service keyboard
12. Test unit box
13. Measurement exec. bus (64 add.)
14. Module power
15. Measurement exec. bus (64 add.)
16. Matric control
17. Measurement exec. bus (64 add.)
18. Synchronizing generator
19. Video generator
20. Special TV signal generator

8984
CSO: 2502/70

EAST EUROPE/MICROELECTRONICS

SZAMALK OFFICIAL ON LACK OF COMMUNICATIONS

Budapest MAGYAR ELEKTRONIKA in Hungarian No 3, 1986 p 107

[Interview with Zoltan Huba, of the SZAMALK (Computer Technology Applications Enterprise): "We Have Only One Question...."]

[Text] [Question] Creation of local computer networks is proceeding at a good pace in Hungary but there is a great need for creation of more extensive networks, for distant terminals to be able to access central data banks. We feel that this is especially true in the area in which you work, computerized professional literature services. What is your opinion about the present situation and especially about the necessary perspectives for development?

[Answer] Hungarian technical experts are frequently charged with not reading much. It is a fact that a literature search is a long and mechanical job and it is not by chance that they are using computers for this more and more everywhere in the world. The possibility of online search has been available to readers in the national professional library of SZAMALK for 6 years. But during this time we have not been able to build up a link even between the SZAMALK headquarters and the other SZAMALK buildings. We cannot provide a line for a few "information consumers" who would lease this service from SZAMALK. What is needed today is not primarily fixed (leased) lines. More and more computer technology experts are sitting at terminals or personal computers, so they have one of the conditions for online computer use. Another condition, computerized databases filled with data, has been given for years. What is needed now is for these terminals to be linked to connected (dialed) telephone lines, for it to be possible to call up the computer on these telephone lines (possibly through modems with an automatic call receiving capability) so that anyone, at any time can perform professional literature research. I think that the possibility of a dialed telephone line link is also fundamentally important for the videotex systems already trying their wings in our country. These systems are intended to make it possible for even a simple user to access databases managed by a computer and to use the television set at home as a terminal for this. If such systems were built up the library information service would be available to the general public. Considering the broad interest being shown in computer technology these days I believe that there will soon be a burning necessity for this.

Naturally what has been said applies not only to the computer technology professional libraries, indeed it does not apply only to professional libraries. I am convinced that if such a videotex system were to aid use of the large public culture libraries it could have an effect on the culture of the entire nation.

8984
CSO: 2502/70

EAST EUROPE/MICROELECTRONICS

PROFESSOR KALMAN TARNAY INTERVIEWED ON MICROELECTRONICS TRAINING

Budapest MAGYAR ELEKTRONIKA in Hungarian No 3, 1986 p 106

[Interview with Kalman Tarnay, a faculty leading university professor at the Budapest Technical University: "We Have Only One Question...."]

[Text] [Question] You are one of the few to receive an honorary doctorate from the famous Uppsala University and you have contributed greatly with your work, worthy of international attention, to laying the foundations for microelectronic design in Hungary and to educating the staff of young experts necessary for this. How to you see the harmony between the microelectronics industry and the research and training taking place in your faculty?

[Answer] One of the problems of the microelectronics industry is that the preparation of some new integrated circuit is a very labor demanding and expensive task. The microelectronics industry can function profitably if there is the greatest economic harmony between the manufacturers of integrated circuits and equipment, but cooperation is not based on the principle of local profit. The profit can appear when new services are created in new equipment. So the cost appears in the manufacture of integrated circuits and the profit can be made on the equipment. Looked at this way the domestic electronics industry is in an unfavorable situation, because it consists of parts which do not embrace the entire area. This is certainly a factor which holds back the domestic electronics industry. Another factor, with which we deal very little but which is very essential from the viewpoint of the microelectronics industry, is that circuits today throughout the world embrace a spectrum extending from submicron technologies to 4-6 micron technologies. About 95 percent of the circuits are made with 4-6 micron technologies, even in the United States and Japan. These are circuits at the level of LSI circuits which, if they are equipment oriented and so made in partly prefabricated form, can satisfy the special needs of equipment most economically. Since the greatest part of the domestic electronics industry manufacturers its equipment in relatively small series it should exploit the possibilities connected with this to the maximum degree. The preconditions for this from the viewpoint of supplying experts in normal university education and in the form of further training courses can be regarded as ensured.

But industry is a little distrustful of this trend. This is odd because there are not only disadvantages there are also advantages to the backwardness of domestic microelectronics. That is, we can know approximately what we must be doing 3-5 years hence, what the leading world trends are which we can exploit best. The microelectronics industry, and Hungarian industry in fact, can be kept alive only by following these trends.

In my judgment the instruction in the Electrical Engineering School of the Budapest Technical University is rather progressive; 3 years ago we started instruction in a microelectronic technologies section. Here we train specialists for research, design, development and manufacture. The material supply and inventory of equipment mean certain limitations, naturally. We are in a favorable situation because there is a special form of postgraduate training, the so-called day research and development special engineer training (C training), which we perform in good cooperation with and with the full support of domestic industry, research and development. This is capable of training specialist replacements at a very high level and with broad horizons. For my part I am confident that if these young experts sooner or later become leaders in the area of industry they will bring into their work an attitude more progressive than the present one.

The name of the Electronic Devices Faculty is known even internationally in the area of microelectronics machine design. We have developed CAD programs in the area of circuit analysis which are used at a number of Western universities as well. Since the end of the 1960's the faculty has been working in this area and the TRANZ-TRAN circuit analysis programs operate not only in the microelectronics industry, they are also used in socialist and capitalist countries (e.g., in Tallin and Uppsala). The program is now being put into operation in California, at the Santa Barbara university.

8984
CSO: 2502/70

EAST EUROPE/MICROELECTRONICS

TABLE OF CONTENTS OF MAGYAR ELEKTRONIKA

Budapest MAGYAR ELEKTRONIKA in Hungarian No 3, 1986 pp 2-3

[Text] NOTE: ISDH [ISDN, Integrated Services Digital Network]--Challenge or Subterfuge..... p 1

INTERVIEW: Technicians About Themselves..... p 4

FOCUS:

Use of Surface Mounting Technology in Telephone Exchange Circuits..... p 8
A Color, Liquid Crystal Picture Display With 3 Million Pixels..... p 8
A Synthesizer to Generate Mathematical Functions..... p 8
The Developing Pace of Computer Technology in China..... p 9
New Personal Computers of the GDR and Their Peripherals..... p 9
The Soviet Agat Personal Computer..... p 9
A Parallel Computer System Using 512 Processors..... p 10
GaAs Microprocessor..... p 10
Development of a 256 K Bit CMOS Static RAM..... p 11
An M Bit EPROM in Three Versions..... p 11
IBM Shoots Hot Electrons Through Cooled GaAs..... p 12
Japanese Integrated Circuit Manufacturers Among Best Ten..... p 13
Kodak Enters Circle of Small Disk Drive Manufacturers..... p 14
New Transistor of Bell Labs With 5.8 ps Switching Time..... p 14
Production of EEPROM's From Standard Cells..... p 15
Profitable Videotex Service in France..... p 16

TELEPHONE:

Gabor Jako: The Program for the Development of the Hungarian Telecommunications Network..... p 18
Frigyes Berecz: Tasks and Opportunities of the Hungarian Telecommunications Engineering Industry..... p 28
Bela Molnar: The Effect of the Development of Microelectronics on Switching Technology..... p 32
Peter Eisler: Automated Operations Monitoring As A Tool To Improve the Quality and Increase the Efficiency of the Telephone Network..... p 44

DEVICES: Peter Mahr: The USZCT Automatic TV Testing Equipment..... p 52

CONTROL TECHNOLOGY: Istvan Morocz and Zoltan Barati: A Study of Control Technology Signal Transmission With a Commodore Computer..... p 58

HOBBYTRONICS:

Istvan Toth: A Commodore 64 Software Program To Generate Check Sums..... p 80
A Simple Phase Sequence Indicator..... p 83
A Precise Digital Faradmeter..... p 84

CIRCUITS:

Filter Operating With Switched Capacitance..... p 85
Use of Counting IC's at the Output of an A/D Transformer..... p 86
Multiplier-Decoder Simplifies High Frequency Receiver..... p 87

REVIEW: Rudolf Radnai: Book Reviews..... p 88

FURTHER TRAINING:

Bertalan Szilassy: The C Programming Language (III)..... p 92
Miklos Palfy and Balazs Locsei: Solar Elements I..... p 101

PANORAMA: Gunther Klasche: TV Sets: Digital Technology On The Road To Victory..... p 68

INTERFACES:

We Have Only One Question..... p 106
Research-Development-Manufacture..... p 107
Potpourri..... p 111
Conferences--Further Training..... p 112

ABSTRACT..... p 116

On Our Cover

On our cover is the operations monitoring system of the BHG [Beloiannisz Telecommunications Factory], LOTRIMOS. In the journal one can find an article by Peter Eisler which reports in detail on the structure and services of the system. The chief advantage of automated operations monitoring systems from the viewpoint of our present telephone network is that they can also be connected to the older style telephone exchanges. This improves the reliability of crowded exchanges and reduces the burden on them.

Telephone

We have devoted this issue basically to the telephone theme. We felt it important to inform our readers what developments can be expected in this very exciting area. We describe the present situation. We should know that the backwardness of our telephone network not only makes bitter our everyday life but also holds back production and causes economic damage. Nor can we think

that we can create a nationally integrated computer network in the near future or considerably expand the sphere of telephone services. The authors in this issue deal in detail with all these problems. First of all Gabor Jako, an expert for the Hungarian Post Office, describes the developmental program for the Hungarian telephone network. Frigyes Berecz summarizes the developmental tasks of the Hungarian communications engineering industry, taking into consideration the requirements posed by the integrated network of the future, the ISDN. The article by Bela Molnar describes the development of switching technology and telephone exchanges. Finally the article by Peter Eisler ends the series, writing of operations monitoring systems.

Devices

In our Devices column Peter Mahr of the Communications Engineering Cooperative describes the development of an automatic TV testing device. Automatic testing equipment, indispensable for large series manufacture of television sets, is being manufactured for Soviet orders. During design one has to take into consideration a flexible satisfaction of needs and the possibility of further development.

Control Technology

Control technology is one of the most dynamically developing areas of the industrial use of microcomputers. The article by Istvan Morosz and Zoltan Barati describes the use of a C-64 for control technology tasks. With the aid of the model developed by them one can compute complex systems which caused difficulty earlier.

Hobbytronics

At the request of many of our readers we intend to strengthen the programming part of this column. We intend to deal only with microcomputer programs which are useful in electronics in some way. We do not want thereby to exclude the possibility that on occasion we will help our readers with generally useful ideas too. We are starting our series of programs written for the Commodore 64 with just such a program. We would be happy if our readers would approach our editors as authors too.

Panorama

There was an interesting compilation recently in the journal ELEKTRONIK about digital television sets. (With the permission of the publisher we have taken the article over and are publishing it in Hungarian.) Initial developments have started in Hungary already and it is to be expected that by the end of the 5-year plan at the latest digitized sets will be manufactured here too. Their chief advantage is the speedy testing and servicing but in addition the technique provides outstanding picture quality. Gunter Klasche describes various solutions and the developmental strategy of European firms.

8984
CSO: 2502/70

EAST EUROPE/SCIENTIFIC AND INDUSTRIAL POLICY

POLISH COUNCIL OF MINISTERS' ORDER ON S&T FUNDING

Warsaw DZIENNIK USTAW in Polish No 18, 12 May 86 pp 241-244

["Order of the Council of Ministers of 7 April 1986 on Specific Guidelines for Creating and Managing the Moneys of Central Funds for Science and Technology Development"]

[Text] Pursuant to article 6 and article 13, paragraph 5 of the law of 23 December 1985 on central funds for the development of science and technology (DZIENNIK USTAW, No 59, item 297), the following is decreed:

Chapter 1

General Regulations

Article 1. Whenever the order makes reference to:

1) the law - the law of 23 December 1985 on central funds for the development of science and technology (DZIENNIK USTAW, No. 59, item 297) is meant,

2) programs - sets of issues in social, natural or technical sciences requiring a solution through R&D intended to reach a definite practical or cognitive goal are meant,

3) general technical activities - work on standardization, unification and typification, industrial samples, scientific, technical and economic information, innovations and protection of exclusive rights, training and improvement of cadres, quality control, propagation of scientific and technical achievements and other functions associated with the development of science and technology or progress in organization and economics is meant,

4) ministers and ministries - heads of central offices and central offices and also the scientific secretary of the Polish Academy of Sciences are meant,

5) supervising organ - the organ of state administration entrusted with the supervision of the implementation of the program is meant,

6) general contractor - the organizational unit entrusted with the coordination of the program is meant, including also the unit coordinating the central program of basic research,

7) general contract - the contract to implement a program or the contract to fill a government order in the sphere of scientific and technical development,

8) committee - the Committee for Science and Technological Progress of the Council of Ministers is meant,

9) office - the Office for Scientific - Technical Progress and Implementations is meant.

Chapter 2

Central Fund for the Development of Science and Technology

Article 2.1. State enterprises pay the sums referred to in article 2, paragraph 1, points 2 and 3 of the law in the amount set in the national socio-economic plans and in central annual plans to the account of the Central Fund for the Development of Science and Technology owned by the office. These sums are prepaid in quarterly installments before the 20th day of the first month of the quarter, provided that the payments for the past quarter are also settled at the time of prepayment for the 2nd, 3rd and 4th quarter. Settlement for the 4th quarter is done within the deadline for filing the annual financial report. Eventual compensatory payments should be made within 10 days after the official confirmation of the verification of the report.

2. Subsidies from the central budget in the amount allocated by the budget law for a given year are transferred to the fund in the manner envisaged for the execution of the state budget.

Article 3.1. The minister - head of the office, in cooperation with the chairman of the Planning Commission of the Council of Ministers and other ministers involved, prepares the draft of distribution of the Central Fund for the Development of Science and Technology between the Central R&D Fund and the Central Fund of Subsidies for Implementation.

2. The distribution of moneys of the fund referred to in paragraph 1 is carried out by the Council of Ministers in the decree on the central annual plan.

Article 4.1. The moneys of the fund are continuously transferred to the separate bank accounts owned by the office:

1) Central R&D Fund and
2) Central Fund of Subsidies for Implementation.

2. The transfer of moneys of the fund to the accounts referred to in paragraph 1 takes place pursuant to instructiions issued by the minister - head of the office.

Chapter 3

Central R&D Fund

Article 5.1. The moneys of the Central R&D Fund are managed by:

1) the scientific secretary of the Polish Academy of Sciences and the minister of science and higher education as is appropriate with regard to the central programs of basic research,
2) the minister - head of the office with regard to the central R&D programs,
3) proper ministers with regard to other tasks.

2. The minister - head of the office transfers the moneys of the fund continuously to the managers up to the amount of the allocation set for a given year by the board of the commmittee.

Article 6.1. The moneys of the Central R&D Fund are allocated for:

1) target financing of centrally planned R&D of fundamental significance to the socio-economic development of the country and, specifically, work covered by:
a) central and ministry-wide R&D programs of basic research,
b) central and ministry-wide R&D programs,
c) governmant orders in the field of science and technology development,
d) general technical activities, excluding those financed by customers from other sources pursuant to other regulations.

2) financing of R&D work included in central programs and prepared within the framework of international scientific and technical cooperation,

3) subsidizing selected scientific and technical publications,

4) subsidizing measures of scientific and technical advancement by state enterprises, including the construction of pilot and demonstration installations,

5) financing of analyses, evaluations, assessments, forecasts and reports concerning the status and development of individual scientific and technical disciplines,

6) financing other R&D, including the construction of pilot and demonstration installations, which exceed the financial resources of individual units of the socialized sector.

2. The moneys of the fund are also allocated to finance:

1) prizes for outstanding achievements in science and in implementing scientific-technical progress,
2) stipends for carrying out research, development and implementation projects of considerable importance to the national economy and the cost of their preparation.

Article 7. Work in the field of general technical activities may be financed with the moneys of the fund provided it is:

1) a project prepared within the framework of other R&D projects,
2) a separate R&D project,
3) a continuous operation of an R&D facility or a scientific facility of the Polish Academy of Sciences.

Article 8.1. A general contract is the basis for financing a particular program.

2. Moneys of the fund are allocated to the program in stages. Allocation of funds for the next stage depends on the evaluation of results and use of funds in previous stages.

Article 9.1. The release of funds allocated for a particular stage of the program takes place at the request of the general contractor by setting up an account in the appropriate branch of the bank on the basis of the authorization issued by the manager of the fund for using the funds allocated for a given stage.

2. The transfer of the authorizations referred to in paragraph 1 takes place at the request of the organ supervising the preparation of a central program if such a program is involved.

3. The bank makes payments incurred in the preparation of the current stage of the program from the account referred to in paragraph 1 up to the limit of the amount allocated for that purpose.

4. Payments from the account referred to in paragraph 1 are refunded by the bank from the moneys in the account of the manager of the fund.

Article 10. Specific guidelines for the subsidies referred to in article 6, paragraph 1, point 4 are set in the contracts between the manager of the fund and the enterprise concerned.

Article 11.1. Contracts provide the basis for financing individual R&D projects both included and not included in the programs.

2. With the exception of cases referred to in paragraph 10, transfer of the moneys of the fund takes place upon completion and certification of the projects referred to in paragraph 1.

3. Transfer of the moneys of the fund in payment for work under contract can also take place:

1) for individual units of the project envisaged in the contract,
2) periodically, on agreed-upon dates and within the confines of the agreed-upon price,
3) in total, as far as the entirety of homogenous and repetitive work within an agreed-upon period of time is involved.

Article 12.1. Assets closely related to the research topic and needed to develop it can be purchased or produced with the moneys of the fund within the framework of R&D regardless of their value, specifically:

1) special scientific and experimental equipment,
2) experimental prototypes of new machinery and equipment,
3) pilot installations,
4) experimental buildings and structures.

The above also applies to outlays for construction and installation work needed to render the assets operational.

2. The agreement between the manager of the fund and the contractor provides the basis for financing the assets referred to in paragraph 1 with the moneys of the fund, their disposition upon completion of the project and sharing of proceeds after the eventual sale.

Article 13.1. The prizes referred to in article 6, paragraph 2, point 1 are awarded either by the board of the committee or by ministers on its authority depending on the significance and nature of the achievement.

2. Moneys allocated for the prizes awarded by the board of the committee are separated in the account of fund moneys at the disposal of the minister-head of the office.

3. Moneys allocated for the prizes awarded by the ministers are separated in the accounts of fund moneys at the disposal of these ministers.

4. Moneys for the stipends referred to in article 6, paragraph 2, point 2 are separated within the part of the fund moneys remaining at the disposal of the minister-head of the office.

5. Specific guidelines for managing the fund moneys allocated for prizes and stipends will be set by other regulations.

Article 14.1. Within the confines called for by the scope of the project, the moneys of the fund can be given for disposition to scientists individually to be spent for R&D carried out by them or under their direction and proceeding towards a definite practical or cognitive goal. The scientist entrusted with the moneys submits the results of his work to the manager of the fund and reports on the disbursement of moneys pursuant to the conditions set forth in the contract.

2. The moneys of the fund can also be entrusted to inventors along the guidelines described in paragraph 1 in order to finance work on preparing the inventions for practical use under their direction.

Chapter 4

Central Fund of Subsidies for Implementation

Article 15.1 Moneys of the Central Fund of Subsidies for Implementation are allocated for refundable or non-refundable aid to state enterprises, R&D

facilities, scientific institutions of the Polish Academy of Sciences and colleges consisting of subsidies for implementation measures:

1) associated with the implementation of government orders in the sphere of science and technology,
2) involving other undertakings of particular importance in scientific and technical development, including work on the implementation of inventions.

2. The moneys of the fund augment the appropriate funds of the units referred to in paragraph 1.

3. The amount of financial aid and conditions for granting it are outlined in general contracts in the cases referred to in paragraph 1, point 1, and in the cases referred to in paragraph 1, point 2 in the contract between the manager of the fund and the interested units.

Chapter 5

Central Hard Currency Fund

Article 16.1. The amount of moneys in the Central Hard Currency Fund in set in the central annual plans.

2. Pursuant to general regulations, the currency of the fund is allocated for subsidizing or, in certain cases, financing entirely the imports associated with the programs, government orders or other important undertakings in the field of science and technology development.

Article 17.1. The minister - head of the office:

1) draws the draft of annual hard currency outlays for the purposes referred to in article 16, paragraph 2 and submits it to the board of the committe for approval,

2) authorizes the supervising organs, general contractors or other units executing projects to use hard currency to a given limit, within the allocations approved by the board of the committee,

3) prepares annual reports on the use of the fund and submits them to the board of the committee.

2. The committee evaluates the use of the moneys of the fund as well as the results of the preparation of programs, government orders and other undertakings in science and technology development, on the basis of information furnished by the board of the committee.

Chapter 6

Provisional and Final Regulations

Article 18. State enterprises make the payments to the Central Fund for Science and Technology Development referred to in article 2, paragraph 1 for

the 1st and 2nd quarters of 1986 within a month of the publication of the present order.

Article 19. Regulations of the budget law on the management of target funds apply to matters not regulated by the present order.

Article 20. The order takes effect on the day of publication and applies to the creation and management of the central funds for science and technology development from the day the law takes effect.

Prime minister: Z. Messner

9761
CSO:2602/47

EAST EUROPE/SCIENTIFIC AND INDUSTRIAL POLICY

GDR UNIVERSITY RESEARCH COORDINATED WITH INDUSTRY

East Berlin NEUES DEUTSCHLAND in German 5-6 Jul 86 p 10

[Article by Dr Karla Schroeder: "Cooperation Saves Time: Coordination and General Service Contracts of Karl Marx University With Combines"]

[Text] By the end of 1986, almost half of the scientific research capacity of Karl Marx University (KMU) in Leipzig will be contractually linked with industry. This is referred to in a NEUES DEUTCHLAND discussion with Prof Dr of Sciences and honorary doctor Lothar Rathmann, rector of Karl Marx University, and Prof Dr Gerhard Hirshfeld, research director.

There have recently been 11 new coordination contracts signed between KMU and partners in practice, including with the Leipzig-Grimma chemical plant construction combine, the Erfurt microelectronics combine, the Dessau vaccines combine, the GERMED pharmaceutical combine in Dresden, and the VEB industrial animal production combine in Mockrehna. Four additional coordination contracts are being prepared and will be concluded before the end of this year.

Service contracts were developed and signed on the basis of these agreements. They fix binding provisions for the individual research tasks--from the duty book to completion defense. Such research applies to such areas of national economic importance as biotechnology, coal analysis, automatic data processing, problems of animal breeding and animal production, and others.

One of the service contracts--concluded between the organization and computing center of KMU and the VEB microelectronics combine in Erfurt--includes the development of program analyses for minicomputers. The scientists thereby develop the software, that is, the programs and instructions for the minicomputers. For this purpose, the contracting authority, the microelectronics combine, provides basic equipment, expansion components and follow-on equipment. This cooperation serves new solutions and important national economic tasks in the area of microelectronics.

Another example is the service contract between the Dessau combine for vaccines and the Life Sciences Section of KMU. It serves the development of new test systems for monoclonal antibodies. Antibodies are cells that the body needs to protect itself against disease germs or harmful substances that

arise in the body itself; monoclonal antibodies are propagated from a single cell using complicated biotechnological procedures; they are completely homogeneous and can systematically combat a quite specific disease. For the production and testing of identical antibodies, the combine provides the material-technical preconditions, including equipment and chemicals that are needed by the life scientists of Karl Marx University.

The coordination contracts also include subjects in the social sciences that deal with ideological, economic and social questions of scientific-technical progress as well as with the computer-aided management and planning of the combines. Thus, for example, economists at KMU are developing production programs that can be planned and organized in an optimum manner. The new aspect of this method of complex plan optimization is that all economic and technological dimensions such as capacity, demand, sales, costs and receipts, including their value and quantity relations, can be investigated and rationally calculated and systematically modified in several optimization stages with respect to their efficiency.

The coordination contracts, explained Prof Rathmann and Prof Hirshfeld to NEUES DEUTSCHLAND, do not merely aim at gaining time in applied research. A fundamental intent of the long-term contractual cooperation with industry is to intensify investigative basic research and to develop scientific areas further for a gain in theory and additional advance knowledge.

9746
CSO: 2302/25

EAST EUROPE/SCIENTIFIC AND INDUSTRIAL POLICY

LEIPZIGER VOLKZEITUNG INTERVIEW WITH SOVIET NUCLEAR SCIENTIST

Leipzig LEIPZIGER VOLKZEITUNG in German 14/15 Jun 86 p 10

[Exclusive interview with Lenin Prize winner Prof Dr Georgiy Flyorov, Joint Institute for Nuclear Research (VIK), Dubna, by Manfred Schulze; date and place not indicated]

[Text] [Question] Prof Flyorov, you are considered to be one of the fathers of modern nuclear physics and in the 1940's you helped to break the nuclear weapons monopoly of the United States. What were the milestones of your scientific career during that time?

[Answer] Beginning in 1937, I had the great fortune to be able to study and work at the Physical Technical Institute under Igor Kurchatov. All of the great discoveries--neutron-induced nuclear fission by Hahn and Strassmann, for example--were carefully pursued here, for we were carrying out similar parallel research. Through this, Petrzak and I succeeded somewhat later in demonstrating experimentally the self-disintegration of uranium nuclei. During this time, I also met such outstanding scientists as Joffe and Kapiza. The war then interrupted my work and I went to the front but at least I was able to follow the technical literature. I thereby noticed that suddenly nothing more was being reported on nuclear research in the West. My conclusion that that could be a sign for the on-going construction of the atomic bomb was initially not considered likely by the academy presidium. Not until a letter was sent directly to Stalin was the work taken up on our atomic bomb, a task that was then crucial for the survival of all of us.

For several decades, I have been involved at the Joint Nuclear Research Institute in Dubna with the search for further chemical elements and their properties.

[Question] You thereby reached element 109 last year--in minute quantities, to be sure, that disintegrate in a fraction of a second. How is it possible to prove anything at all?

[Answer] That is indeed a great problem when one considers that in several hours one produces just a single atom. But detection technology has also undergone substantial further development in recent years. As a rule, today new elements are synthesized in the particle accelerator by fusing two

suitable atomic nuclei with smaller masses. In this connection, initially there are orienting physical measurements and only then can one attempt to isolate the new element and to determine its new properties. They are important in that in them we can see how the produced elements fit into Mendeleev's periodic system or what sort of deviations there are.

[Question] Nevertheless, these new discoveries are not uncontroversial internationally....

[Answer] For one thing, that certainly has to do with the objective difficulties in verification. The new elements are often produced in different laboratories within a short time and then begins a very regrettable quarrel leading to the fact that the elements with the atomic number of 102 and higher still do not have internationally recognized names. I think that one should finally give up these fruitless debates and make some clear arrangements. In any case, I would be very pleased if one would soon honor the name of such pioneers of nuclear research as Kurchatov, Bohr, Hahn or Rutherford.

[Question] Element 109 appears to be only an intermediate station in the search for new and possible more stable building blocks of nature. You have already indicated that the search for them must not exclusively be through the particle accelerator?

[Answer] Certainly very promising are new and substantially more powerful accelerators with which the number of collisions and thus of fusions can be greatly increased. But one should also be on the lookout for completely new methods! Nature still offers a very large reservoir, from which we have so far researched only a small part. A Swedish professor once proposed to me that we capture a meteoroid with a spaceship so as to analyze it. This idea, which may seem amusing, has an interesting aspect: the cosmic matter may very well contain something unknown that has heretofore been unable to reach us through the atmosphere. To be sure, the realization of such bold dreams requires worldwide international cooperation as well as the abandonment of the wasteful SDI plan.

[Question] To speak about Dubna requires going into the cooperation of the socialist countries. What does the Joint Nuclear Research Institute mean 30 years after its founding?

[Answer] The Joint Nuclear Research Institute in Dubna is an example of how well international cooperation can function. Here is a center of action and training for top and junior scientists that has no equal in the world. Dubna also has the advantage that here up-to-date and expensive equipment is also available for countries that are not yet so well equipped technically and that the research results are made available to all member countries. In addition, I now had the opportunity to report on our work to the scientists of the Academy Institute for Isotope and Radiation Research

[Question] After the accident at Chernobyl, it would certainly be interesting to have an answer to the question of whether a nuclear physicist as well may develop and discover everything that could be done....

[Answer] Humanity has already asked itself this question often and history has written the answer: one cannot stop progress and when something is truly of general benefit, then one should spare no efforts and means to put it into effect. In the introduction of other new technologies, there have been been all sorts of doubts, accidents and even disasters.

Nuclear energy has a future, for it is fundamentally controllable. The real danger is in military misuse and that is why I would be very much in favor of concentrating the attention of the entire world public on this source of danger. I believe that the proposals of Mikhail Gorbachev for the gradual disarmament of all nuclear weapons by the year 2000 would be the best way to eliminate the dangers and to concentrate fully on the continuous improvement of the technology of peaceful use.

9746
CSO: 2302/28

EAST EUROPE/SCIENTIFIC AND INDUSTRIAL POLICY

DIRECTOR DISCUSSES GDR MACHINE TOOL RESEARCH CENTER

East Berlin TRIBUENE in German 13 Jun 86 p 11

[Interview with Dr of Engineering Peter Ulrich, director of the Machine Tool Building Research Center in the VEB Machine Tool Building Combine Fritz Heckert in Karl-Marx-Stadt, by Roland Tittel; date and place not specified; first three paragraphs are TRIBUENE biographical introduction]

[Text] After attending the former Goethe Secondary School in Karl-Marx-Stadt, Dr of Engineering Peter Ulrich, born in Chemnitz in 1938, learned to be a mechanic at the VEB Large Lathe Building "8 May." He then studied cybernetics at the Karl-Marx-Stadt Technical College and subsequently worked as an assistant to the technical director of the Machine Tool Building Research Center.

He worked for many years at the headquarters of the VEB Machine Tool Building Combine Fritz Heckert and here he was director for research and development during the years 1978 through 1983. In 1983, Dr of Engineering Peter Ulrich was appointed director of the Machine Tool Building Research Center.

Dr of Engineering Ulrich is married, has a son and now already has a grandchild as well.

[Question] Do we need a research center for machine tool building?

[Answer] Not because I am its director but out of my most profound conviction: yes! If we want to increase the production of machine tools to 150 percent by 1990, raise the share of machines equipped with microelectronics to 80 percent, and do more to integrate machine tools into automated manufacturing complexes, this can only happen when we link the advantages of socialism even more closely with the scientific-technical revolution. This was also pointed out by the 11th SED Congress. The concentration of research capacities is one of these advantages.

In addition: in machine tool building as well, the scientific-technical development means that more and more complex research tasks can be resolved. I am thinking of flexible production, of microelectronics as a whole, of CAD/CAM solutions.... Something like that exceeds the possibilities of one enterprise but not those of a research center. On the contrary, that promotes

interdisciplinary teamwork and brings the greatest efficiency through centralized research. After all, 80 percent of the expenditures for a new product or for a new technology can be influenced by the designer.

[Question] Can you give an example to illustrate the advantage of concentration?

[Answer] By 1990 the level of equipment of machine tools with microelectonic controls will be increased significantly. And technological procedures that have not yet been developed for computer controls will then be permeated with microelectronics. An example of this is the spur wheel roller grinder with a microelectronic drive that we developed jointly with the "7 October" Machine Tool Combine in Berlin and presented at the Leipzig spring fair as a top-level achievement. The electronic drive replaces 1,050 components from a half ton of steel and a half ton of cast iron as well as 400 production hours.

The higher degree of machine automation with microelectronic equipment benefits not only the producer but also saves the user time, energy and costs. Improvement through microelectronics is a general demand that we can handle through the research concentration and the associated teamwork, including with other areas.

[Question] So the director was only congratulated when the research center became 30 in April?

[Answer] Not only I, we were all congratulated, officially and in many personal encounters and conversations. Since many profit from our work, there were neither enviers--for our success is everyone's success--nor has anyone pitied us, for we have produced good things in these three decades. The mountain of work to be accomplished is, to be sure, enormous but together with the enterprises we can do it, so that no one must feel sorry for us there either.

[Question] Is the research center still working toward the same goals as at the time of its founding?

[Answer] In principle, yes. Thirty years ago, when the Karl-Marx-Stadt institutes for machine tools, for production engineering, and for tools and devices were combined into the research center, that took place so as to increase the contribution of machine tool building to efficiency in the metalworking industry. That is still the purpose today.

Neither was there any change in the second goal: it is still a matter of closer teamwork between those that develop machine tools and those that manufacture and use them. Sometimes precisely that leads to temporary joint collectives that remain together "on site" until the new machine has overcome all of its growing pains and has attained the foreseen parameters.

We have to think about just one thing: in accordance with the higher requirements, we must achieve these goals in new quality, that is, with even better work. So today we are dealing with goals that must stand up to the requirements of at least the next 10 years.

[Question] What is the most important thing that the research center has achieved so far?

[Answer] It is difficult for me to accentuate any one thing. There was something quite important in every phase of our development. The first numerically controlled machine tool was something just as important as Prisma 2, the first flexible production system in the main enerprise of the Fritz Heckert Combine. Today the development and application of the key technologies is something very important. However: without the successes of each preceding period and without the knowledge that is thereby gained and the lessons that are sometimes derived from mistakes, we would hardly have achieved anything new and important for our machine tool building. In my opinion, the continuity of the work is a critical source for continually better and more beneficial solutions.

Many colleagues of the research center have received great honors for our successes. In the last 30 years, there were 34 winners of the National Prize, 23 distinguished technicians and 9 distinguished inventors. We also have a distinguished scientist and a hero of labor. In the past 10 years, 37 collectives of the Machine Tool Building Research Center were distinguised with the "Banner of Work" order. This moral recognition is also part of our spendid successes.

[Question] Is the research center a rarity in our country?

[Answer] For machine tool building, yes, but there are other research centers. One can mention the Research Center for Conversion Technology, the Research Center of the Tool Industry, the Central Institute for Welding Engineering... It is usual for each branch of industry to have its research center although it does not always call it that. Not all of them are as "old" as we are but they are by no means less important.

[Question] Is a machine tool large enough for everyone to present his idea?

[Answer] He not only can but should! The development of machine tools has long since stopped meaning the mere design of a machine. Today's machine tools include the thoughts of many. Today, for example, one must also develop specific printed circuit boards. That it why we also established our own laboratory for hybrid circuits and why this year we want to produce another 500 of these circuits ourselves.

Besides designers, today there are also chemists and materials technicians working in the research center. So today many are giving their ideas for a new machine. By the way, one can see their success in the number of patents submitted and used. It has doubled since the beginning of the 1980's.

[Question] What is the Karl-Marx-Stadt Technical College, a partner or a competitor?

[Answer] Because we not only talk about but practice teamwork, it can never be a competitor but only a partner. We benefit greatly from the researcher potential of the college. We therefore cooperate not only with the technical

college but also with the Central Institute for Cybernetics and Information Processes of the Academey of Sciences, for example. Basic research findings combined with practical knowledge have already produced many good solutions. The modular programming system for flexible production systems or the manager workplace, awarded the gold at the Leipzig fair, are just two examples of this.

[Question] So the college students have plant identification cards?

[Answer] No, but they do have permanent passes that allow them to come to us during their practical training or during the diploma phase. Support of student training is one side of the cooperation with the college. It is valuable in three ways: here the students have their first contact with specific research, we can do much to stimulate their love for their future occupation, and finally we can increase our own research potential a little through specific tasks for the young people.

[Question] And where do the colleagues of the research center sit in the lecture halls and seminar rooms of the college, in front of or behind the lecturing desk?

[Answer] In both places. Naturally we like to utilize the possibilities of the college for our own advanced training. The complexity of the development in machine tool building demands it, although for some we must do more to awaken a permanent need for advanced training. But just as often, to be in the picture, we stand behind the lecturing desk and impart our knowledge formed by years of practical experience. For example: Prof Dr Russig lectures on automation technology and Dr Joachim Petermann on production control.

[Question] So colleagues of the research center give impulses. But what impulses are provided by the director himself so that "pastures of ideas" become more and more lush and thus more nourishing?

[Answer] It is very important to do a good job of managing collectives politically and technically. Just as I demand that from all the managers of the research center, I demand it of myself as well. Before we tackle a task, it is discussed in detail--generally at the level of the technical directors. I thereby make an effort to guide the initial ideas into the proper channels, for even the boldest idea must someday be rationally produced in an enterprise and ultimately well sold. Once we have this "crude" cut, the technical directors discuss the task further in their areas and finally organize the exploitation of the idea. In this phase as well, I try to maintain a perspective so that I can likewise give impulses. That sort of thing is quite simply part of the duties of a director.

[Question] Does an engineer in the research center need a divining rod to come up with something?

[Answer] By no means! We have not only specialized areas and proving grounds but also an effective information and documention department. About 30 men and women evaluate all domestic and foreign technical periodicals, condense

them into generally valid information, and give this information to all managers and specialists. Up-to-date equipment is available for this and for patent investigations as well, relieving engineers and designers. But that is only one aspect. An equally important source for stimulating information is the cooperation with the colleagues in the enterprises. This teamwork results in many new ideas for solutions that no one thought of before. With them, we will never need a divining rod.

[Question] All research and development departments of the combines and enterprises of machine tool building must also be partners in the work. Is that realistic or utopian?

[Answer] Our main partners are the Fritz Heckert Combine and the "7 October" Machine Tool Combine in Berlin. It is logical that we cooperate very closely with all those in these combines, who are doing research and development just as we are. That is the way it is, has been and will remain. Nevertheless, more can be done: We must "link ourselves" even more closely and come to an even better understanding on goals.

[Question] Competition by the specialists in your proving grounds is possible and conceivable. But is there competition between the drawing boards and desks of the designers?

[Answer] Together with the enterprise labor union executive board, we gave a lot of thought to how we can minimize the subjective factor in evaluating scientific-technical results and actually carry on competition in the scientific-technical area. We began this 3 years ago. Today the benefit can be seen anytime in the quantity and quality of the fulfilled plan tasks.

We publicly account for the results of the competition every quarter. First, second, and third places are conferred in eight comparable competitive groups and two challenge banners are bestowed on research centers. Through the associated public discussion, there is much more talk about what concerns us in the research center. The banner of honor of the SED Central Committee that we received on the eve of the 11th SED Congress is probably the best indication that we are on the right path.

[Question] Do the members of the research center help to rationalize only in the enterprises or do they themselves rationalize?

[Answer] Rationalization puts high demands on our own work in every respect. The more time and energy we gain for our own creativity, the better we can contribute to comprehensive intensification through rationalization in the enterprises.

We must therefore take an even more critical look at our work and find and utilize reserves. Computer-aided design is an important matter that makes for high productivity. But it is only one side of the coin. An even better work organization, the better use of working time, the adherence to the work breaks, and the further reduction of administrative work all create room for better and more thorough reflection, for more ideas and thus for better solutions in machine tool building.

[Question] Do the working conditions at the research center facilitate or hinder ideas for better and better and more efficient machine tools?

[Answer] We work predominantly in new buildings that have up-to-date equipment and are easily accessible. Most of the people like the lunches. We have two small holiday facilities in Kyritz and Holzhau and have arranged a vacationer exchange with the USSR.... Naturally nothing is so good that it could not still be improved. Nevertheless, we are all pleased to be working here. Our very low labor turnover rate is a good indication of this.

[Question] In closing, a personal question: Do you yourself still build machine tools?

[Answer] I could not manage the research center or judge the performance of others without specific technical work. Unfortunately, I have no time to stand at the drawing board myself or to prepare software. But I always make an effort to acquire enough knowledge so that in the proving grounds report, for example, in which we examine the status of the work every week, I can not only know what is involved but also give correct advice and make the right decisions. In this respect, I do believe that I am still enough of a machine tool builder. I am pleased to manage such an important enterprise.

9746
CSO: 2302/27

END