Non-Lethal, Taser Remote Controlled Sentinel Weapon

Presented at

NDIA Non-Lethal Defense IV Symposium

Tysons Corner Virginia March 20-23, 2000

Event #042

Author:
J.F. McNulty

TASERTRON
1785 Pomona Rd. Suite C
Corona, CA 91720

UNCLASSIFIED

The Non-Lethal Remote Controlled Sentinel Weapon

By

James F. McNulty

The Non-Lethal, remote controlled, Taser™ "SENTINEL" will be presented at this symposium. The Sentinel is a multi-shot, electronic weapon with a range of 30 feet. The weapon is not only safe and effective but is target specific, causes no collateral damage, does not contaminate areas, has adequate isolation to keep our troops out of harms way and requires very little training and support. The device can be aimed in both azimuth and elevation and can be laser sighted. The Sentinel's small low velocity (200-400 feet per second) tethered projectiles cannot go astray and hit bystanders. Automatic video recording upon arming prevents misuse or abuse.

Development

The initial Taser Area Denial Device (TADD), (Fig.1), that simultaneously fired seven sets of darts, over an arc of 120 degrees, when tripped by any mine sensor was the first unmanned Tasertron Taser weapon. A paper on the TADD was presented at the NDIA Non-Lethal Defense III Symposium. This was followed by the single shot Volcano launched Taser Munition. These devices were the Non-Lethal alternatives to the Anti-Personnel Landmine. The team of, PRIMEX Aerospace and Tasertron won a Concept Evaluation contract with, US Army, ARDEC funded by USMC, NLWD, for the Volcano Taser munition. Our first, Remote Controlled (RC), multi-cartridge, Taser weapon was a modified TADD that can be remotely fired from a security station rather than automatically firing when the TADD's sensors are tripped. The RC TADD's alarm transceiver is used to receive the firing command, and can also be set to give an intrusion alarm if desired. The remote operator views the protected area from any area security camera.

Objective of the Sentinel: To sustain longer-term coverage against many individual targets and significantly reduce the exposure of our troops to mob action, bomb blasts and to random fire. Also, to reduce casualties of non-combatants and friendly forces in Force Protection, Perimeter Control and in MOOTW. The Sentinel can **deny area access to people, control crowds and incapacitate specific subjects** in situations such as in Somalia, Kosovo and Bosnia. The Sentinel will **protect Embassies** such as in Tehran/Nairobi and Liberia and other critical facilities. It can provide Law Enforcement facilities protection, security in correction areas and in schools without guard presence. Will incapacitate assailants in prison riots, and school takeovers. Prevents misuse or abuse through automatic video recording upon arming.

Payoff: 1. Permits operation from remote, hardened bunkers protecting troops from direct enemy fire or external bomb blast damage. 2. Reduces costs by preventing looting and injury in MOOTW. 3. Mobile operation when vehicle mounted. 4. Reduces "bad press" resulting from having forces captured or injured or from the necessity to employ lethal force when not appropriate. 5. Can prevent assaults by deranged people on students and faculty in schools.

System Concept

The main difference between the RC TADD and the Sentinel is that the Sentinel, while utilizing a modified TADD, (Fig. 2), as part of the system, can be precisely aimed in both azimuth and elevation and fires multiple, individual shots on command over a range of 30 feet (see Fig. 3).

Our dual laser sight can show exact hit points improving accuracy further. The Taser Sentinel is intended to protect military facilities and other key facilities such as airports, embassies, armories, TV and radio stations from assault, by individual intruders or by groups during major demonstrations or riots without resorting to lethal force. A number of the devices would be attached to the building or facility, in addition to denying access they also cover each other from assault. The device can also be used to cover internal corridors and access doorways against armed intruders. For Military Operations Other Than Warfare (MOOTW), the Sentinel can also be turret-mounted on a vehicle to protect food distribution or other trucks from looting. This non-lethal weapon is controlled via remote video from a hardened security room within the facility or from the vehicle cab. The Sentinel is also useful for Military Force Protection operations and can be part of a dual force capability system. This permits minimizing force against intruders and agitators that are not lethally armed or are lightly armed while providing a longer range, lethal option against suicide attacks or heavily armed assailants as part of a common weapons platform.

The Sentinel can be used in perimeter control and facility security for Force Protection, Tactical Security, Operations Security and Prison/Corrections Security. The devices will incapacitate, without permanent harm, and (if desired) permit the capture of, saboteurs, agitators, rioters or soldiers from small patrols of heavily armed troops, without a fight and without exposing our troops to direct fire. Small guard contingents, such as US Marine embassy guards can remotely use Non-Lethal force from internal hardened security rooms or bunkers, to repel assaults by mobs on buildings. Without exposing the guards to capture or injury, and without using their lethal firepower. This would permit time for other forces to form to control the situation. In (MOOTW) the weapons can enforce border restrictions, and protect facilities without using lethal force. The weapon uses Taser technology and many common, Commercial Off The Shelf (COTS) components, including the ammunition cartridges and circuit boards from the police Tasers. These are also common to the Volcano Launched Taser Munitions and the TADD. This commonality simplifies logistics.

In law enforcement use, the Sentinel located in all school entrance corridors can be used to incapacitate one or more intruders from a remote security room manned by one or more school police or security officers. This would prevent school takeovers and lethal assaults by deranged people. The Sentinel cameras also permit early warning to alert school and police of a potential assault and can provide subsequent video evidence and identification. Also, in addition to protecting Police Stations and jails from rioters it may be used in corrections facilities to maintain order in high-risk prison areas such as mess halls, recreation rooms, gyms, auditoriums, and exercise areas without risks to correction personnel. The devices would be arranged to protect each other from assault. The multiple Sentinel installations would be capable of incapacitating 14 to 28 inmates per station, without the physical presence of correction officers. The inmates could be kept incapacitated until a correction SWAT team could secure them and regain control of the area. The Sentinel can also be used in border patrol or perimeter control situations where it is desired to have a "man in the loop" rather than trip devices to stop intruders.

Background:

The Police Taser weapon, which is the basis for all these weapons, has been proven safe and effective in more than 50,000 uses over 20 years of police use by more than 400 major law enforcement/corrections agencies in the United States.

These agencies include the U.S. Department of Justice, NYPD, LAPD, and many others. The Taser has been deployed over 50,000 times with up to 90% success rate and with no fatalities due to the Taser output. The Taser has also been proven safe by extensive studies and testing by the Medical Director of the U.S. Consumer Product Safety Commission (USCPSC), a federal agency, and other safety agencies. **The Taser is so safe it is used by, the University of Southern California, UCI, Duke University, and the University of Cincinnati.** Since the Taser is target specific and causes no collateral damage or injury it is used at very crowded International airports. It is also so effective many SWAT teams, including Philadelphia, Baltimore and Seattle use it. The Taser does not require close physical combat (with the resultant officer injuries) that the "stun gun" requires. Taser weapons do not contaminate areas or endanger those with respiratory problems as chemical weapons do.

Tasers are effective against even determined assailants where Oleoresin Capsicum (OC or pepper sprays) consistently fail. The Taser also does not have the close range lethality of some low impact munitions. The Taser works well even in heavy rain as proven at a demonstration at Fort Benning, Georgia. The very low power, high voltage signal, will also penetrate a combined 2 inches or more of clothing and will arc through soft body armor and can penetrate most chemical/biological warfare gear. The Taser will easily take down a person wearing soft body armor since the high voltage readily arcs through the minute holes in the weave of the armor. The darts do not need to penetrate the armor, the electrical arc will. The Taser is also more effective than a .38 caliber or 9 mm bullet since it is not necessary to hit a vital organ to quickly stop an assailant. These electronic non-lethal weapons have saved the lives of thousands of suspects and have prevented the injury of thousands of law enforcement officers.

The following video is of the handheld police Taser with a range of 15 feet, but all of the Taser weapons including the Sentinel work the same way. The differences are in range, the number of shots, target detection and the aiming and firing.

Technical

Now let's look at how Taser weapons work electronically and why they are Non-Lethal. The Taser uses a small low voltage battery and a relaxation oscillator to generate a very low power (about 0.3 to 0.9 joules), high voltage (50,000 volt) pulse of very short duration (4 to 9 microseconds). The pulses are repeated at 8 to 24 pulses per second. The amount of power that can be generated by each Taser device is physically limited by the energy storage capacity of the transformer and, once designed, cannot be changed. This very low, 0.3 to 0.9-joule power level is about one thousand (500- 1,000) times lower than the 300-400 joule level of the heart defibrillator. The device disrupts the Electro-muscular system causing loss of voluntary motor control. The pulses are delivered via 2 trailing wires attached to small barbed contactors that will snag the subjects clothing or skin. The electronic pulse will temporarily incapacitate anyone within two inches of the darts by overriding the brain's signal to near surface motor control nerves. This causes uncontrollable spasms of the muscles resulting in temporary loss of the subject's voluntary motor control functions. The subject will fall within a few seconds and is temporarily incapacitated. The subject remains conscious and alert but cannot control his muscles. The subject quickly and fully recovers, once the Taser is turned off.

The Sentinel (Fig. 3) is a fixed installation, armored, motorized unit incorporating a gun sighted video camera and a TADD modified to remotely fire one cartridge at a time on command. We've added an indexing plate that rotates to sequentially bring each cartridge into the boresighted position that is aligned with the video camera sight. The unit is gimbaled so the remote operator in the security room can rotate the unit in both azimuth and elevation to accurately aim at subjects within 30 feet of the device. Video recording starts when the Sentinel is armed. When the Sentinel fires the first shot, the TADD indexing plate automatically rotates to align the second cartridge to boresight and arms the second cartridge. Cartridges are not armed until they are in boresight position, but once fired they remain activated until manually deactivated by the operator. The unit will be armored to resist small arms fire and shrapnel.

The mechanically actuated switch (S-4 in Fig. 4) stops the indexing plate at the boresight notch of each cartridge and switch (S-3) arms the cartridge. Firing the cartridge actuates a latching relay (KL-x) that keeps the power applied to the fired cartridge even while the device traverses. A continuous slot for 120 degrees after the boresight position prevents wire breakage as the indexing plate rotates. Upon firing, a bypass relay (K-1) that allows the indexing plate to rotate again until the next cartridge boresight notch is aligned, also actuates. A separate "last shot" relay (K-2) prevents any further rotation once the last cartridge reaches it's boresight position, a panel light alerts the operator when his last shot is fired. After firing the last cartridge, the device must be disarmed, reloaded, and rearmed.

Implementation:
To assure that short circuits, due to misses, or low voltage, due to body hits, cannot disable other dart sets, the Sentinel like the multi-shot TADDs will consist of multiple independent COTS Taser modules (Fig.2-16), High Voltage Transformers (18) and firing bays (20). Their replaceable COTS cartridges are installed in the separate firing bays (20) over a 120-degree area, facing the expected threat. They will be mounted in a 2-inch thick circular plastic housing with a diameter of 12 inches, protected by Kevlar armor. Each quick change Taser cartridge contains its propellant and 2 lengths of high voltage wire with contacts that touch the high voltage contacts in the firing bay. The other wire ends are tipped with small barbed darts.

The dart configuration, however, is that of the police Taser. The upper lead would be the negative lead. The lower positive lead would be angled to provide a spread of about 1-foot for each 10 feet of range. The negative lead would also be connected to an electrode imbedded in the ground (earth). This would provide a contact path from either the upper dart (negative) to the lower dart (positive) or from the lower dart to earth (negative) increasing the take down rate. In this manner the Taser device could take down a crawling or crouching subject (from earth to a single positive dart) or a standing subject from lower to upper dart. The subjects will be disabled for the duration of the applied power plus up to a half-hour.

Feasibility:
The Sentinel permits the non-lethal controlling of mobs and rioters remotely with very small security forces without exposing our troops to direct fire or bomb blasts. Both the Sentinel and the TADDs can substantially reduce the cost of perimeter security by eliminating/ supplementing guard towers and patrols. These multiple Taser devices do not self-destruct. They are field reloadable and can be reused for years to reduce costs. Only the Sentinel, however, can fire multiple independent shots to selectively takedown specific individual targets.

Both the Sentinel and the RC TADD use a man-in the-loop to select the remote target(s) and fire the weapon. The system uses existing well proven devices and COTS components that are in current use. Use of the Sentinel cannot be abused due to automatic video recording when armed.

Maintainability:
The only maintenance required is to reload the weapon in the field after its ammunition is depleted, and to maintain the security cameras and mount. The tasks require no special equipment or new skills and only minimal training.

SUMMARY:
Contribution of the Sentinel to military operations:

- It would reduce the number of troops required to maintain the security of an area.
- It will protect facilities against intrusion or damage by demonstrators, looters or saboteurs.
- When vehicle mounted it can prevent food and supply trucks from being overrun by looters in humanitarian rescue missions or MOOTW operations.
- It can protect our embassies from assault by mobs, without exposing Marine guards to injury or capture.
- It can protect internal corridors and doors against armed intruders without risk to guards.
  *This would include protecting schools against assault by deranged assailants.

When the Sentinel is combined with the standard single shot or two shot, hand held Police Taser firearms (equipped with auto ranging dual laser sights), in the hands of trained Military Police or Guards, and the TADD for perimeter control, we have a broad and effective non-lethal arsenal. This non-lethal arsenal uses common ammunition, circuitry and in many cases common power sources. The standard, hand held Police Taser Firearm is used to incapacitate mentally deranged assailants, those intoxicated by drugs or alcohol, and assailants armed with edged weapons, clubs, etc. but not armed with lethal firearms or explosives. The Sentinel can also be used against assailants with lethal firearms or explosives, since it is remotely controlled from secure bunkers. The Sentinel use can not be abused, nor overcome by brute strength, adrenaline level, or by determination.

About the Author: James F. McNulty Sr., an Electronics Engineer, is an authority on Non-Lethal electronic weaponry and the inventor of the Non-Lethal Taser Area Denial Device. Mr. McNulty holds 6 Patents with another pending and has a number of published papers. He is also a law enforcement non-lethal weapons trainer whose articles on Use of Force, Police Tactics, and Non-Lethal Weapons are published in law enforcement journals and magazines. He is a former police officer and also served with the U.S. Army's 25th Infantry Division. The author serves as Vice President of Engineering for Tasertron, manufacturer of non-lethal police and military Taser weapons. Mr. McNulty's phone is (909) 340-0896, or e-mail to: tasertron@tasertron.com.

Non-Lethal Anti-Personnel Area Protection

Taser Area Denial Device
(TADD)

Typical Capabilities

- Integral sensor detects intruder
- *120° forward protection zone*
- TADD can be positioned for overlapping *coverage zones*
- High voltage darts are fired from *multiple ports on TADD over the 120°* forward protection angle
- Intruders are immobilized (but unhindered) until high voltage pulses are stopped (under automatic control or by remote operator)

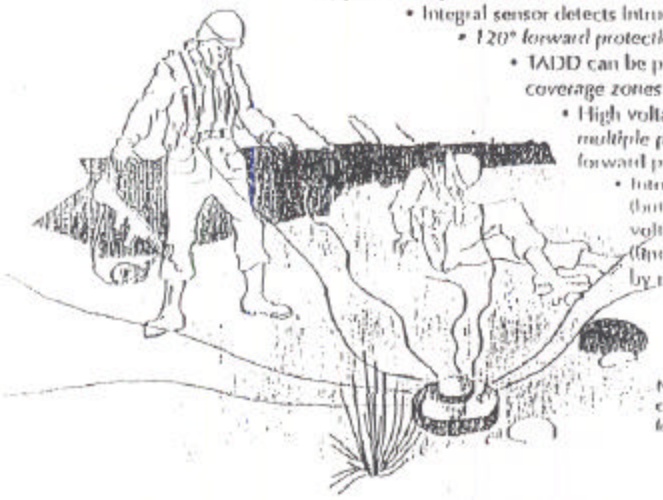

Note: TADD is normally buried or camouflaged; entire unit is visible for purposes of illustration only.

FIG. 1 **Taseriton TADD - Capabilities**

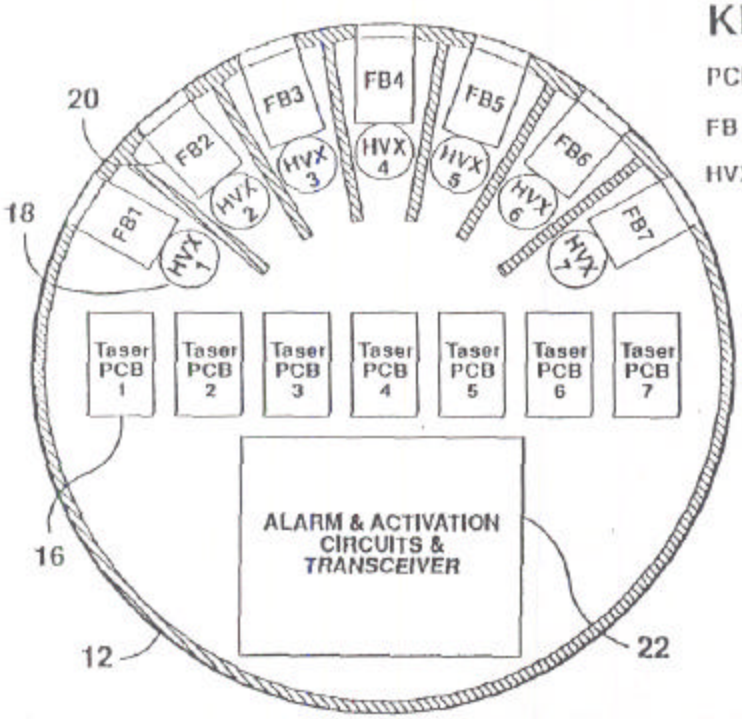

KEY

PCB = Printed Circuit Board

FB = Firing Bay

HVX = High Voltage Transformer

FIG. 2 **Taseriton TADD - Internal Layout**

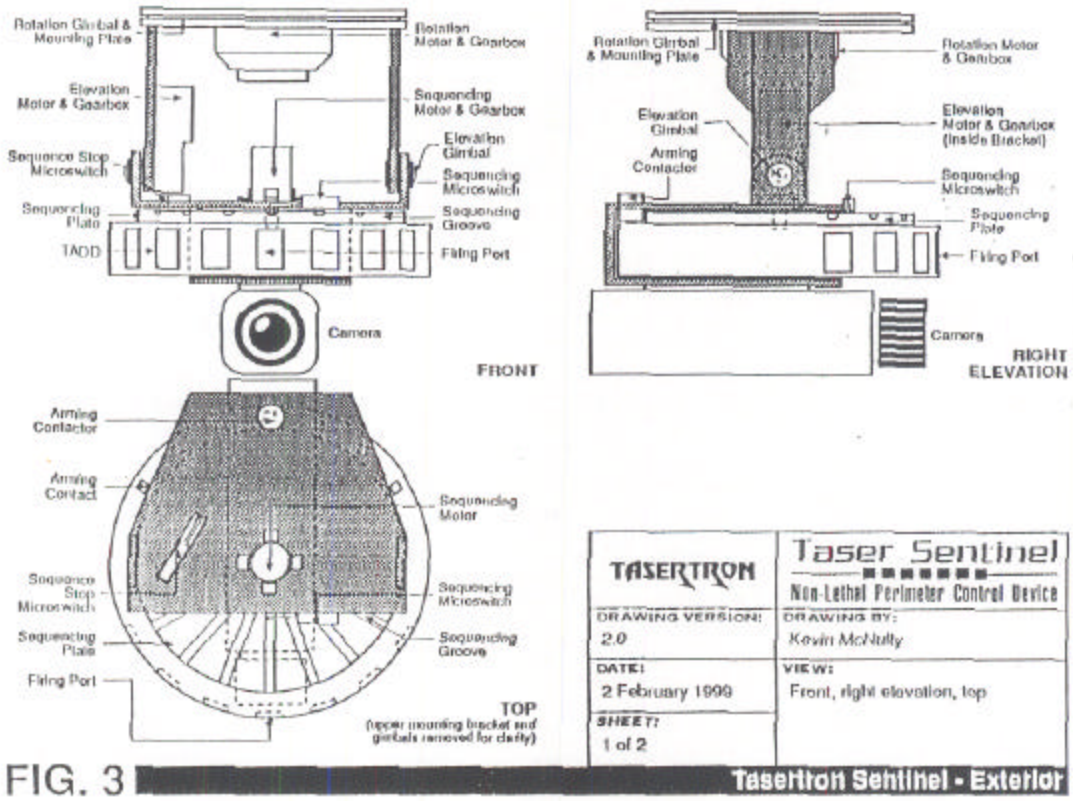

FIG. 3 **Tasertron Sentinel - Exterior**

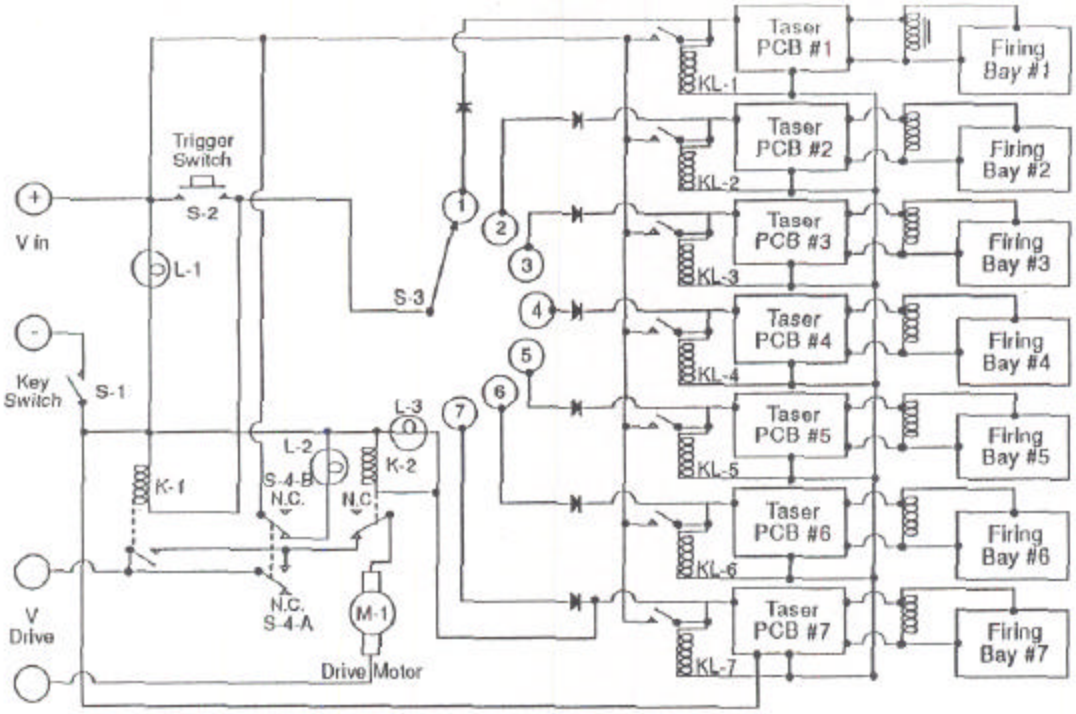

FIG. 4 **Tasertron Sentinel - Wiring Diagram**