Diode Pumped Eyesafe Laser Rangefinder

Contraves Brashear Systems, L.P.
Pittsburgh, Pennsylvania

Presented by Pete Plocki

Program Description

- The Diode Pumped Erbium Glass Laser Range Finder Program started in October 1995 and finished in 1997
- The Project was jointly funded by CBS and the Navy via the National Network for Electro-Optics Manufacturing Technology (NNEOMT) and managed by the Ben Franklin Technology Center of Western PA. (BFTC/WP)

Program Objective

- The objective of this project was to:
  - Reduce the manufacturing cost and improve the reliability of eyesafe laser range finders
  - Improve Performance by achieving a 10 hertz repetition rate
  - Reduce the power consumption, or cooling requirements over the flashlamp pumped systems
  - Reduce the physical size of the laser range finder
-

Program Achievements

- Selected diode pumping to replace conventional flashlamp pumping
  - based on studies which showed improved pump energy concentration, higher efficiency, less thermal loading,higher pulse rate, and potentially much higher reliability and lower production cost
- Conducted Trade Studies to optimize the concept:
  - Pump diode wavelength versus laser rod absorption characteristics
  - Laser rod length Vs erbium concentration Vs heat dissipation

Program Achievements (Cont'd)

- Conducted experiments and software simulation studies on various diode pumping geometry's

- Developed two optimized design configurations for the diode pumped laser transmitter
- Fabricated both units and tested to characterize their performance
-

Block Diagram of the Diode Pumped Erbium Laser

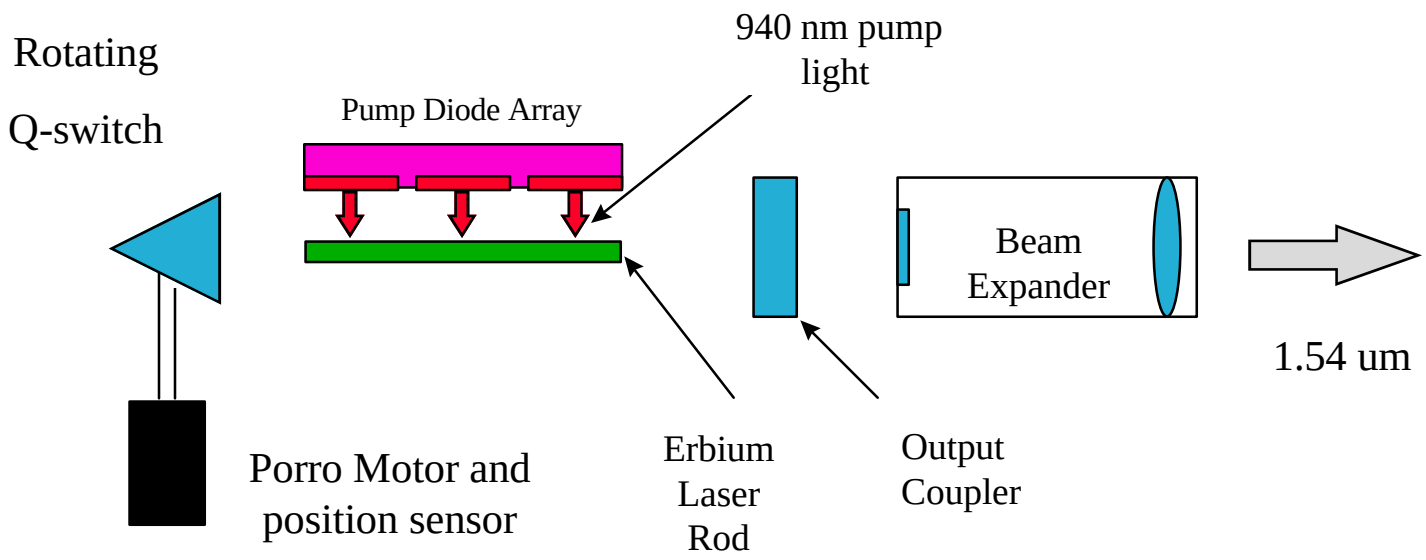

The Er:Glass Laser directly converts the 940 nm optical energy to an eyesafe 1.54 um output

Pictorial of the Side and Radial Pumped Laser Transmitter

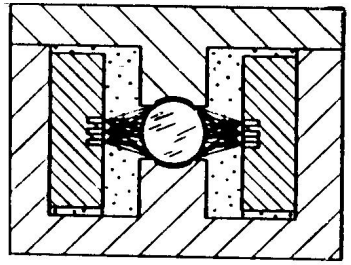

Cut-away view of the Laser Diode Array Side Pump Chamber

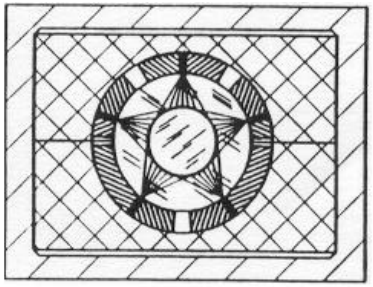

Cut-away view of the Laser Diode Array Radial Pump Chamber

3 - diodes per segment
total of 18 diodes

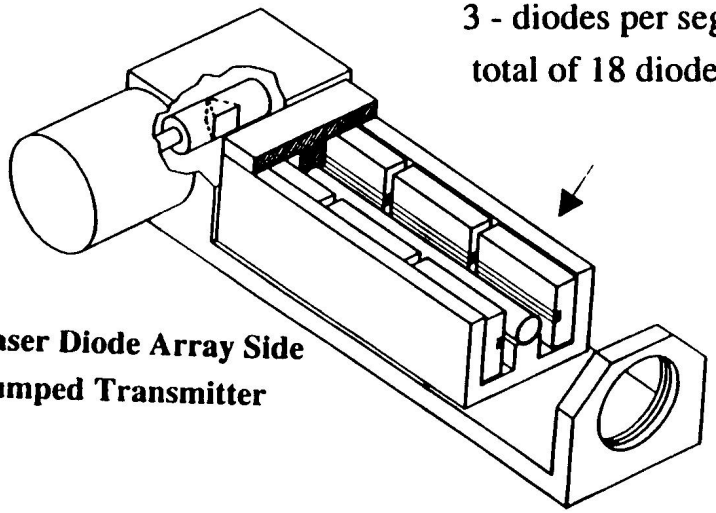

Laser Diode Array Side Pumped Transmitter

5 - diodes per segment
total of 15 diodes

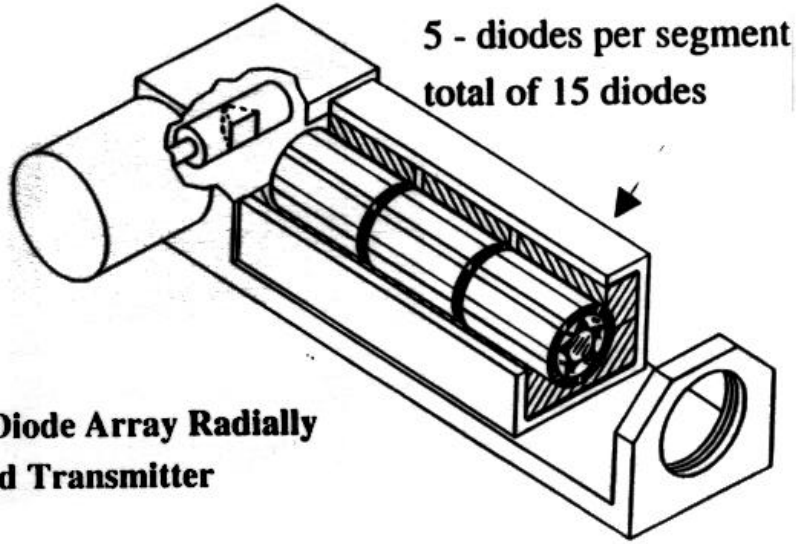

Laser Diode Array Radially Pumped Transmitter

Erbium Glass Absorption Characteristics versus Wavelength

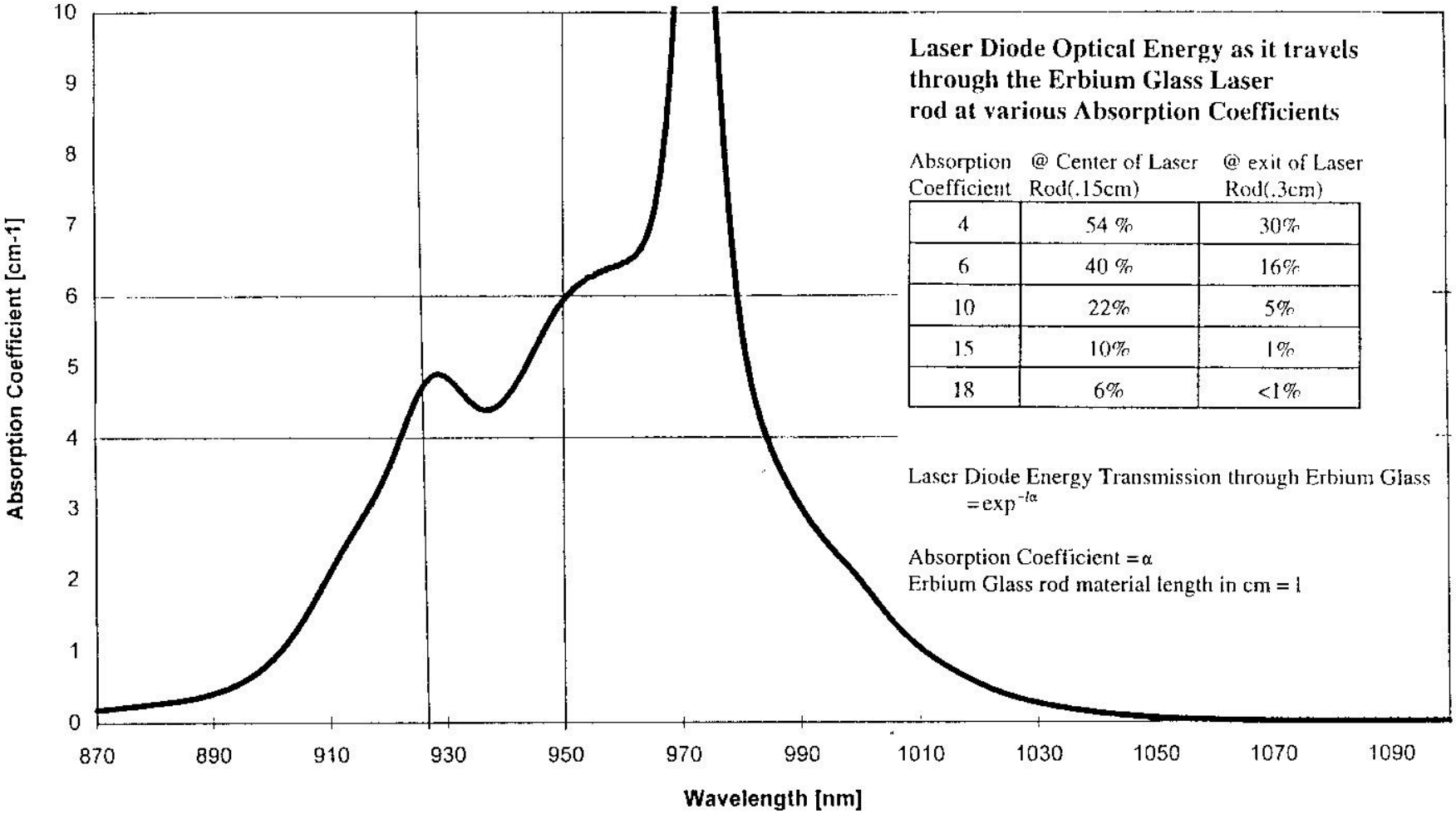

Laser Diode Optical Energy as it travels through the Erbium Glass Laser rod at various Absorption Coefficients

Absorption Coefficient	@ Center of Laser Rod(.15cm)	@ exit of Laser Rod(.3cm)
4	54 %	30%
6	40 %	16%
10	22%	5%
15	10%	1%
18	6%	<1%

Laser Diode Energy Transmission through Erbium Glass $= \exp^{-l\alpha}$

Absorption Coefficient $= \alpha$
Erbium Glass rod material length in cm $= l$

Laser Diode Center Wavelength change with Temperature 0.29nm/degC

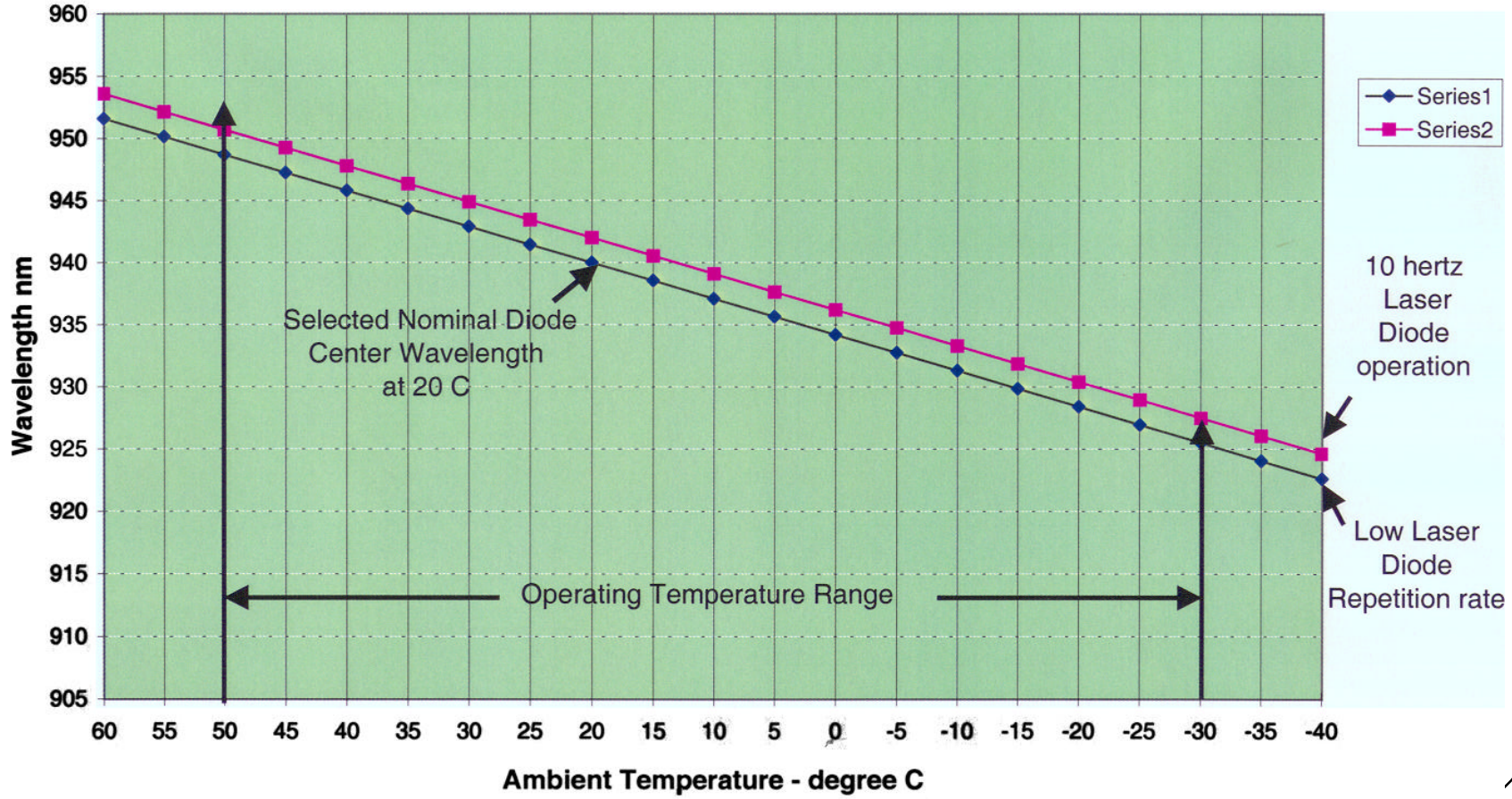

Erbium Fluorescence of the Side and Radial Pumped Configurations

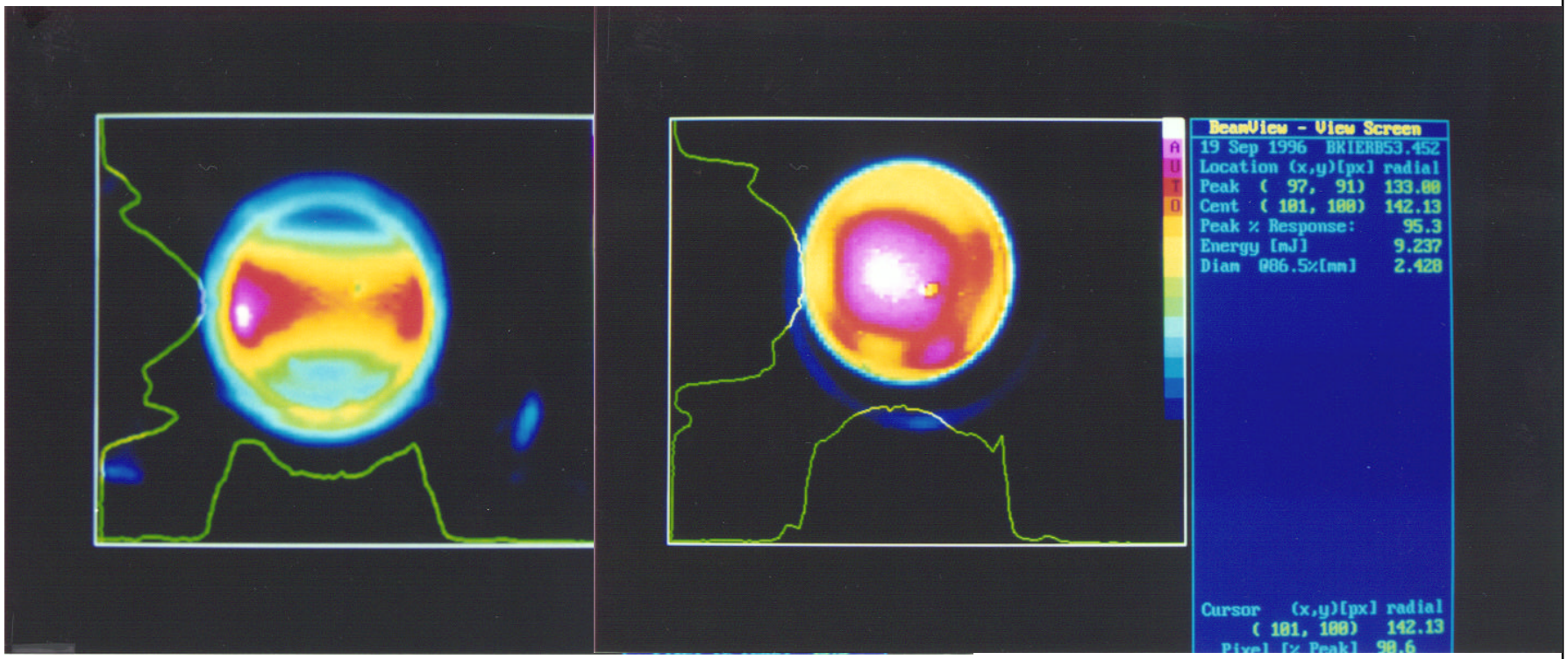

Laser Transmitter Output Beam Profile

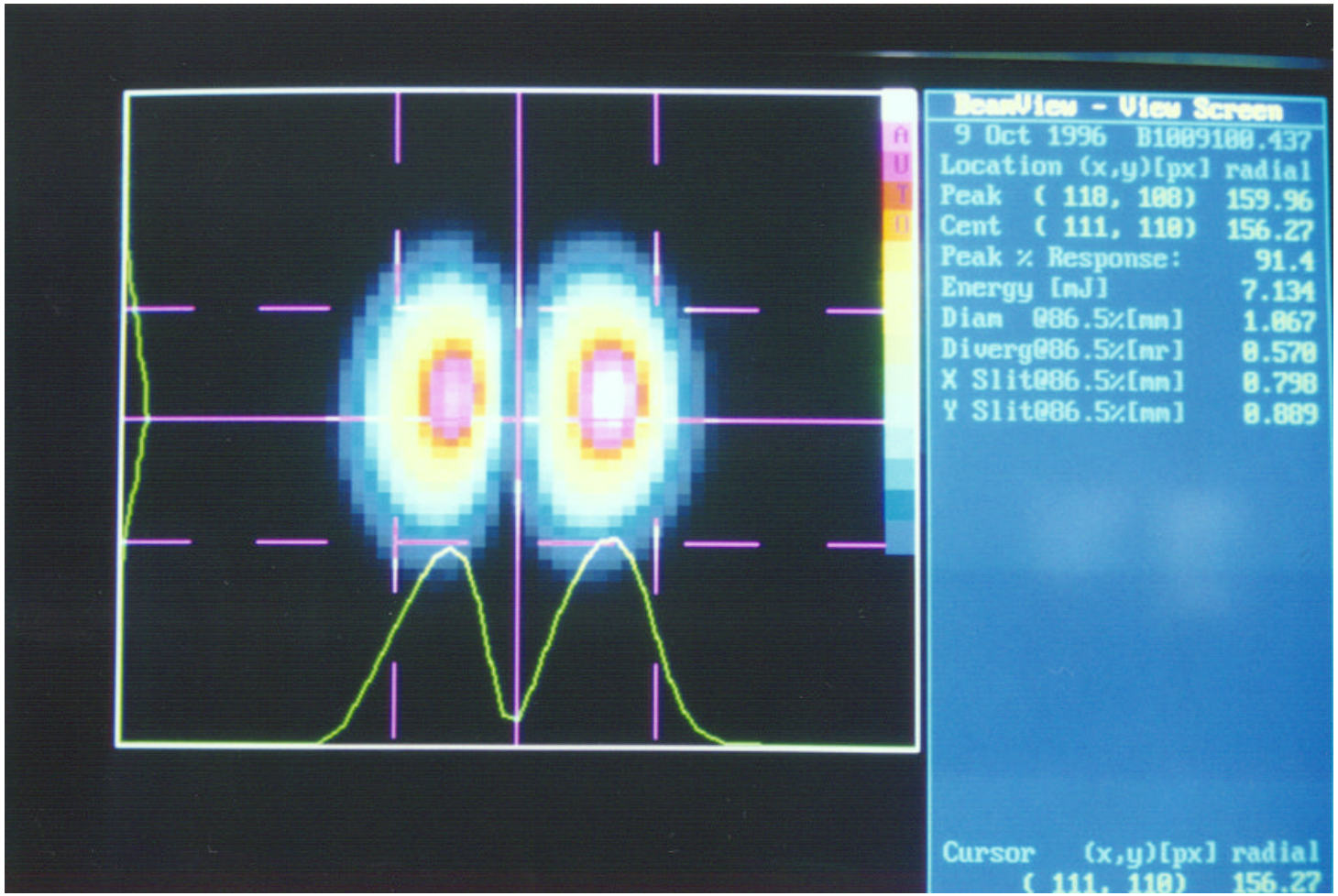

Output Energy Comparison of the Radial and Side Pumped Laser Transmitter

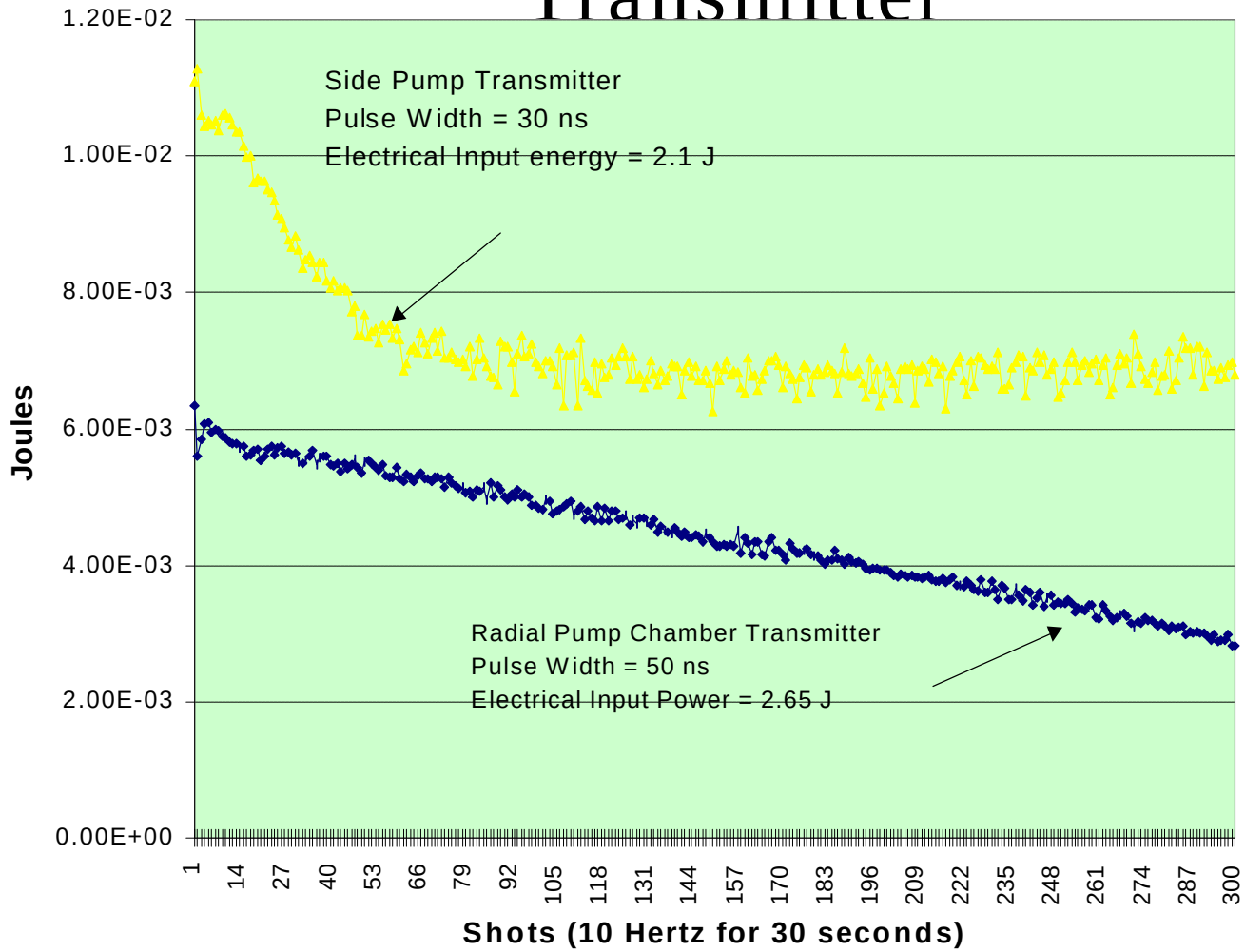

Efficiency Comparison of the Radial versus the Side Pumped Transmitter

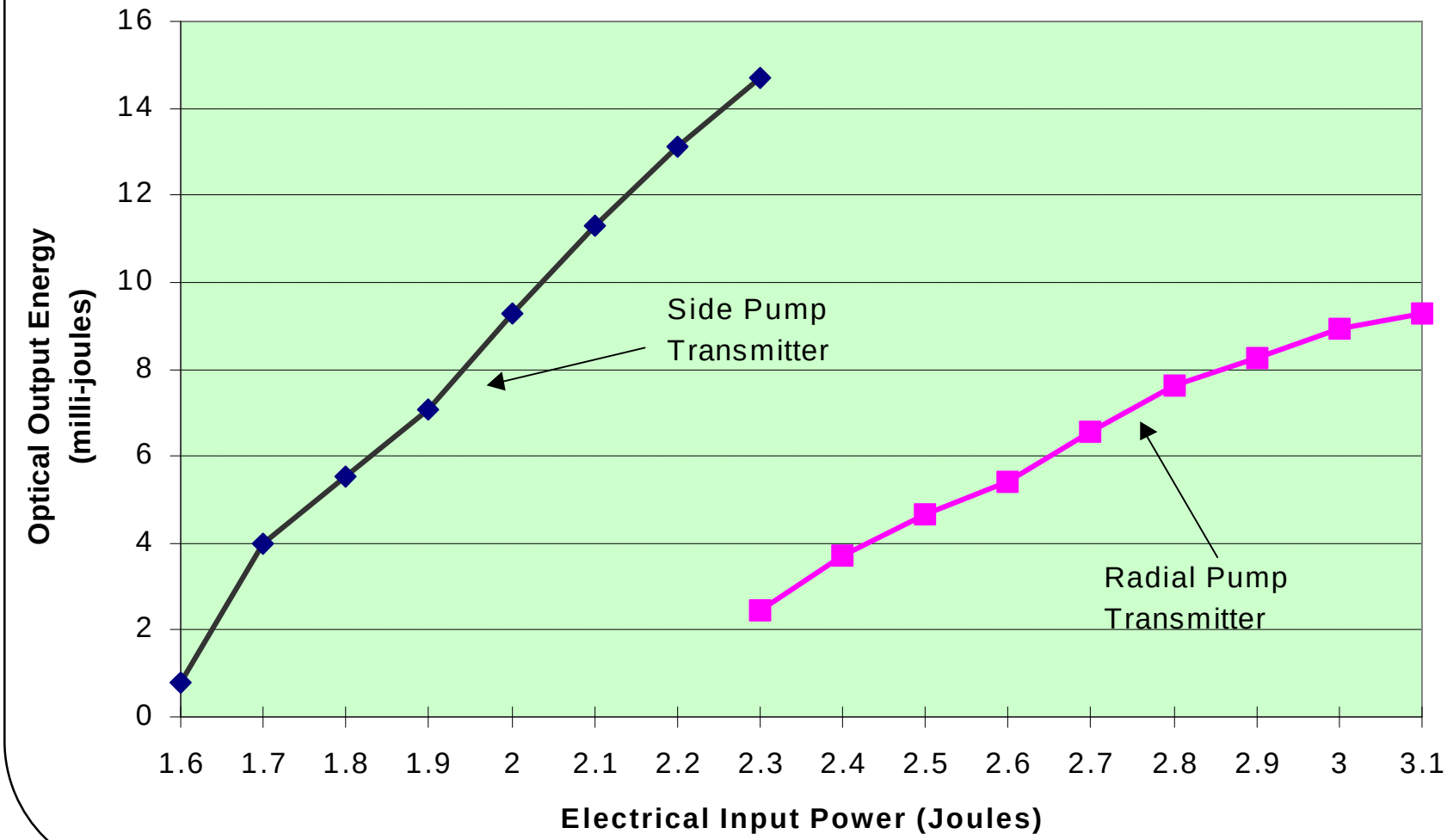

Pulse to Pulse Stability of the Diode versus Flashlamp Pumped Laser Transmitter

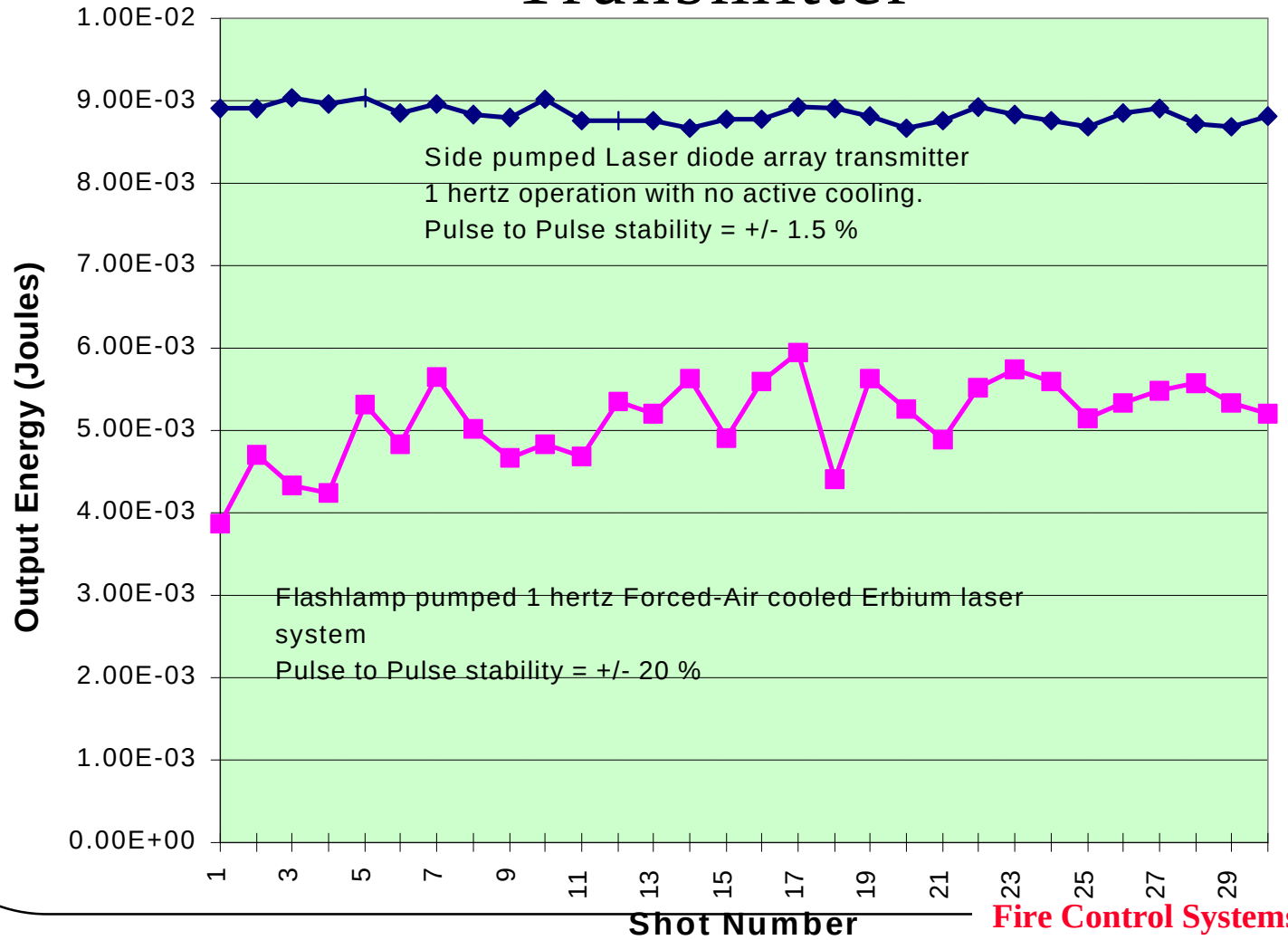

Picture of the Side Pumped Laser Transmitter

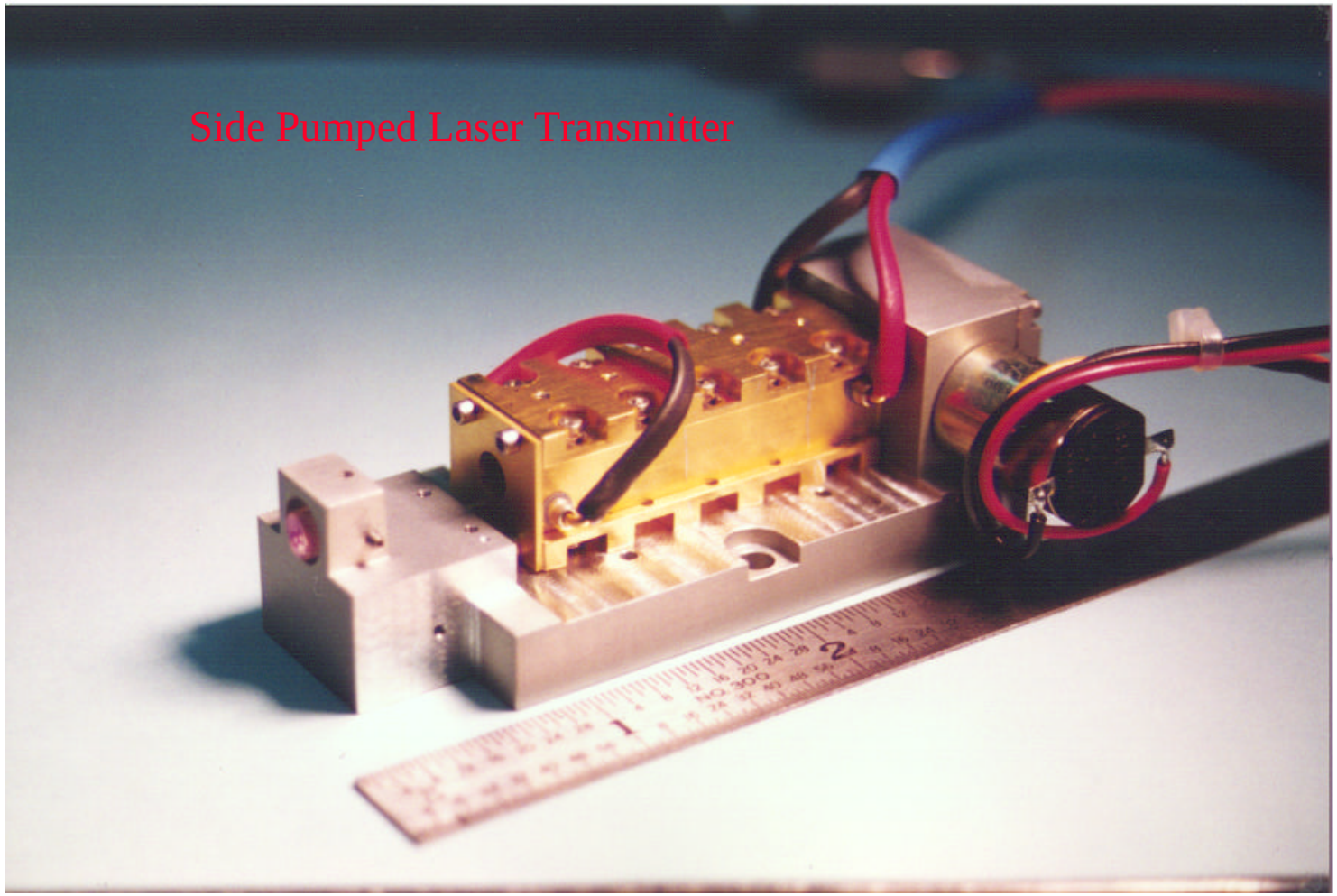

The Diode Pumped Laser Transmitters for SAFCS and OICW

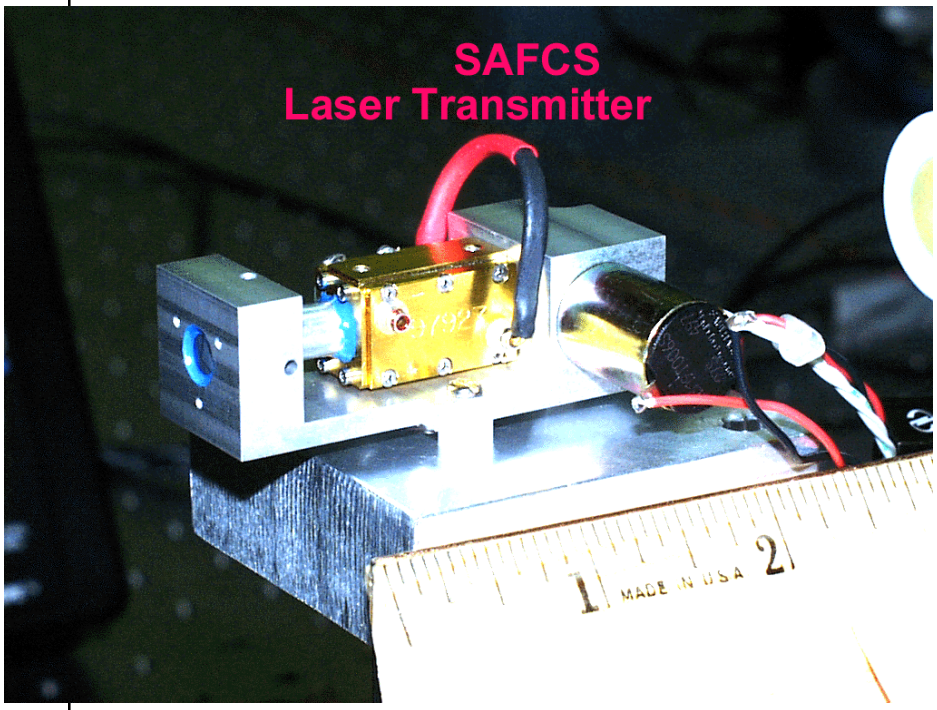

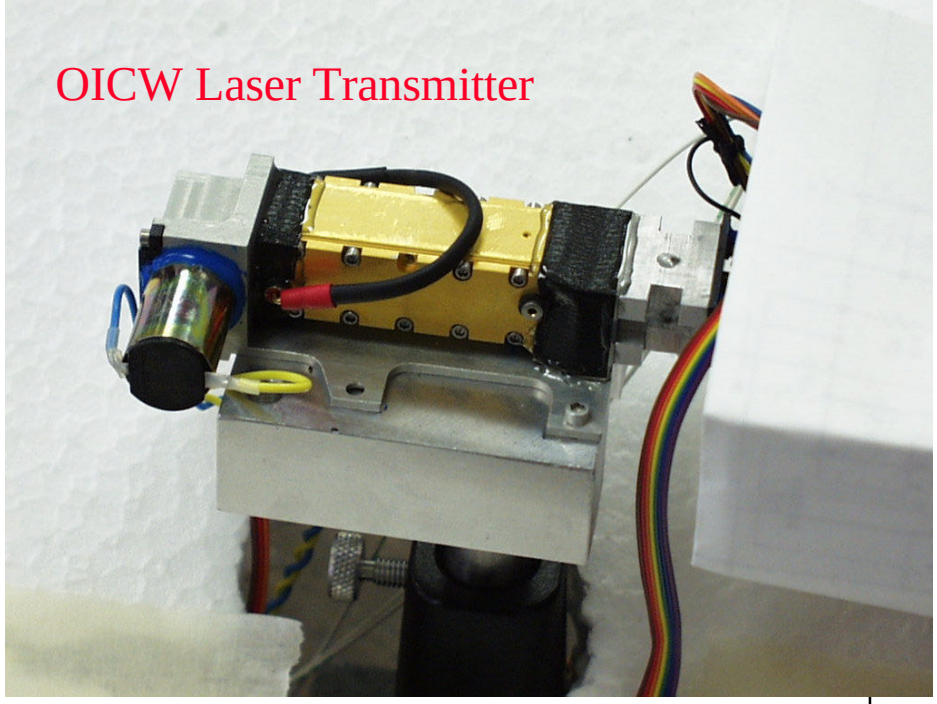

Conclusion

- The program was a total success that provided an eyesafe diode pumped laser range finder that is capable of operating at a continuous 10 hertz repetition rate without active cooling
- The Diode pumped laser transmitter also provides high reliability and low power consumption for single shot range finder applications