U.S. Army Research, Development and Engineering Command

Novel High-g Soft Recovery System (SRS) For 155mm Precision Munitions and Components Soft Catch (SCat) Gun

MAY 16, 2012

PRESENTED BY:
Greg Hader
US ARMY ARDEC
RDAR-MEF-S
Phipps Rd., Bldg. 6
Picatinny Arsenal, NJ 07806-5000
973.724.7733
greg.hader@us.army.mil

JOINT ARMAMENTS
CONFERENCE, EXHIBITION & FIRING DEMONSTRATION
Event # 2610
WASHINGTON STATE CONVENTION CENTER - SEATTLE, WA

TECHNOLOGY DRIVEN. WARFIGHTER FOCUSED.

Distribution Statement A: Approved for Public Release; distribution unlimited.

SCAT GUN
TEST SHOT VIDEO

Distribution Statement A: Approved for Public Release; distribution unlimited.

SOFT RECOVERY TECHNIQUES

ARDEC – 155mm Ballistic Railgun

YPG – 155mm Soft Recovery Vehicle

UK – 81mm Mortar Aerobutt

Rheinmetall – 155mm Catch System

THE ISSUE

- ✓Test cycle costs
- ✓Limit to No. of rnds. fired
- ✓Excessive Balloting
- ✓Max. achievable set-back g's
- ✓Excessive set-forward
- ✓Dynamic Response
- ✓Recovery Impact g's
- ✓Projectile modification
- ✓Non-tactical configurations

YPG – 120mm Hay Bail

ARDEC– 155mm Air Gun

UAHuntsville– 254mm Light Gas Gun

TECHNOLOGY DRIVEN. WARFIGHTER FOCUSED.

Distribution Statement A: Approved for Public Release; distribution unlimited.

US ARMY ARDEC
155mm Soft Catch (SCat) Gun

TEST FACILITY GOAL:

Achieve high-g gun launch in a tactical configuration, catch & recover the round with minimal imparted catch dynamics to conduct test & evaluation.

Distribution Statement A: Approved for Public Release; distribution unlimited.

ARDEC
SCAT GUN DESIGN

- ARDEC Soft Recovery System is Hybrid design – Air & water to decelerate projectile
  - Combines Ballistic Railgun and Air gun technologies
  - Initial concept – Army Research Lab Technical Paper
    - "A Novel Soft Recovery System for the 155mm Projectile and Its Numerical Simulation"
      - Avi Birk & Douglas E. Kooker, (ARL-TR-2462)
  - Utilizes gun tube steel catch tubes and Bridge Steel specifications
  - Multiple Cannon tubes available
    - M199 – Standard (PMP)
    - M199 Proof tube (PMP +10%)
    - XM982 Overpressure tube (PMP +30%)
    - 52/54 Caliber Tubes (i.e. Crusader, FRG, Sweden)
    - 62 Caliber Navy 155mm Tube
  - Spinning (copper band) and non-spinning (slipped obturator) projectiles
  - Multi-channel on-board-recorders (accelerometer data)
  - 155 mm variant operational APR 07
  - Key Contributors
    - Nigel J. Gray – US ARMY ARDEC
    - Dr. Donald Carlucci – US ARMY ARDEC
    - Avi Birk – ARMY Research Lab (retired)
    - Cliff McLain – Radiance Tech (support contractor)

Distribution Statement A: Approved for Public Release; distribution unlimited.

WHAT DOES IT OFFER?

- Live-fire for high-g testing tactical projectiles and components
- Capability to fire spinning and non-spinning rounds
- Any 155 mm projectile can be used
  - No high explosives – inert packaged warheads
  - On finned projectiles, fins must be removed/constrained
  - Ogive and/or Fuze must withstand 3,000 psi
- Capture data with multi-channel On-Board Recorders (OBR)
  - Verify Finite Element Analysis (modeling and simulation results)
  - Excellent for dynamic testing of projectiles
  - Range of 2,000 to 18,500 g's set-back
- Since ACTUAL structure is used, dynamic results are nearly exact

Distribution Statement A: Approved for Public Release; distribution unlimited.

HOW DOES IT WORK?

- Projectile is fired from a standard 155mm weapon
- Band is stripped (if applicable)

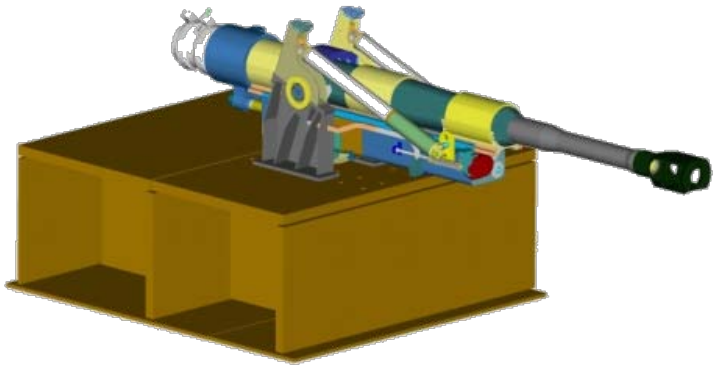

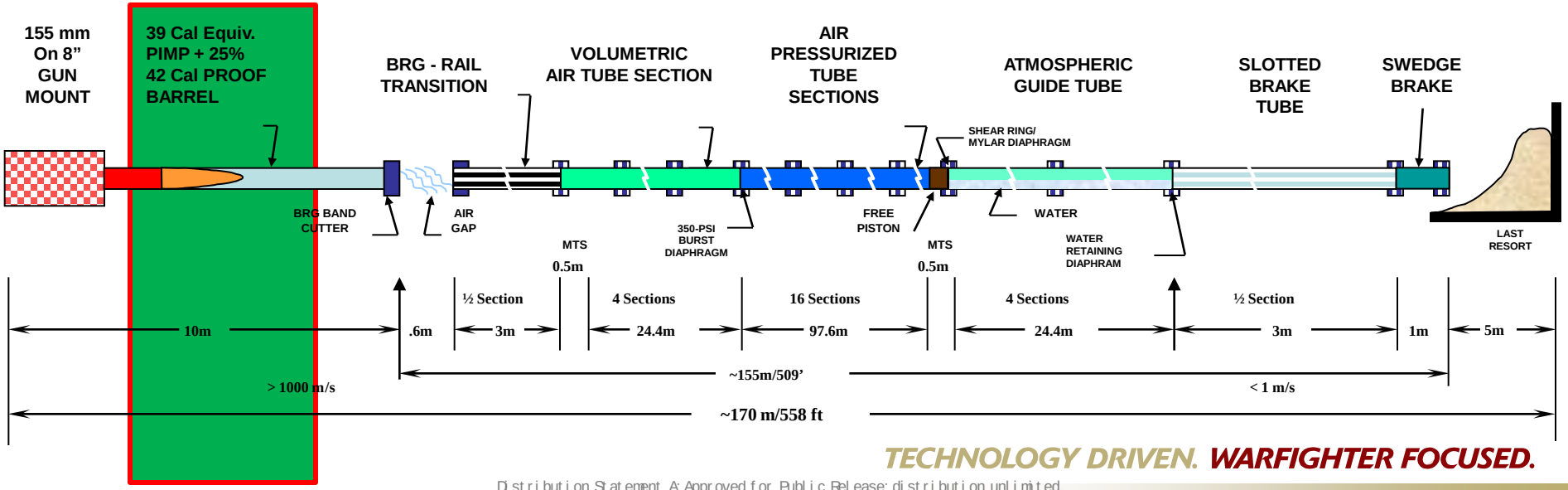

TECHNOLOGY DRIVEN. WARFIGHTER FOCUSED.

Distribution Statement A: Approved for Public Release; distribution unlimited.

HOW DOES IT WORK?

- Projectile enters a slotted tapered tube and propellant gases vent

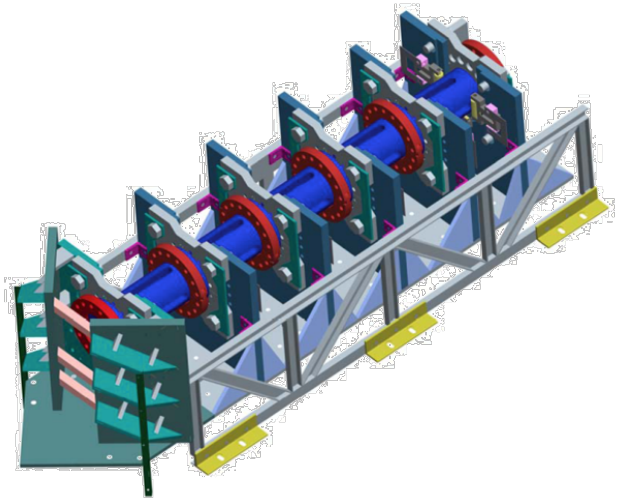

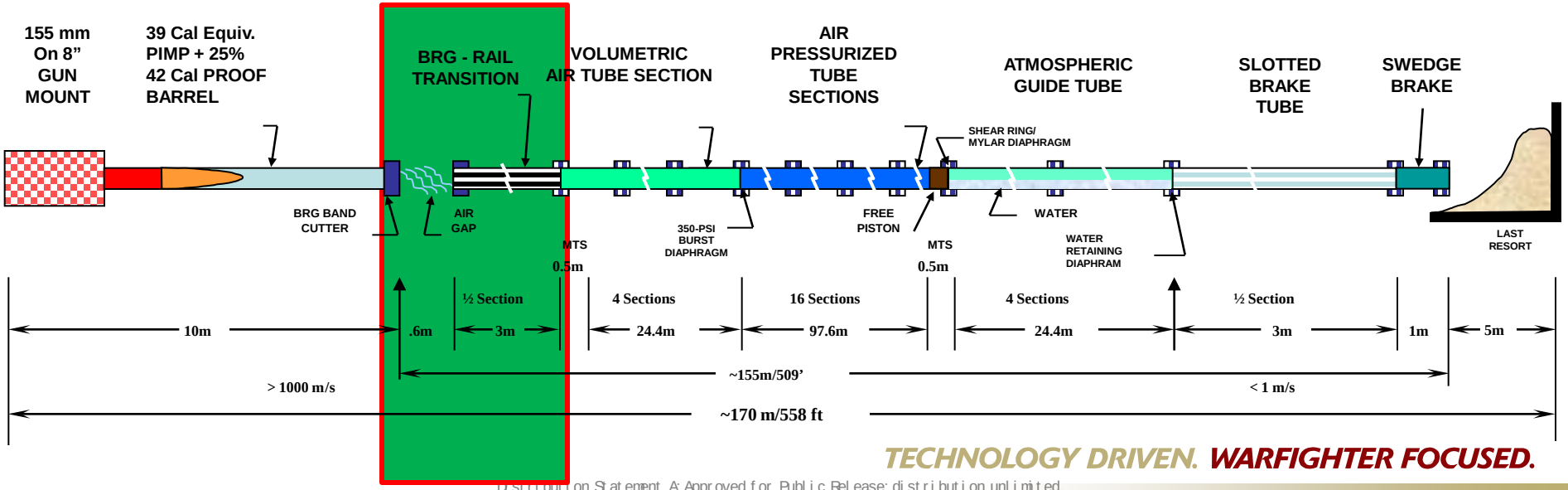

TECHNOLOGY DRIVEN. WARFIGHTER FOCUSED.

Distribution Statement A: Approved for Public Release; distribution unlimited.

HOW DOES IT WORK?

- Projectile enters a tube at atmospheric pressure
  - Shockwaves are generated and air is compressed (proj. velocity dependant)
  - Shock propagates to burst a diaphragm retaining 20-120 psig air

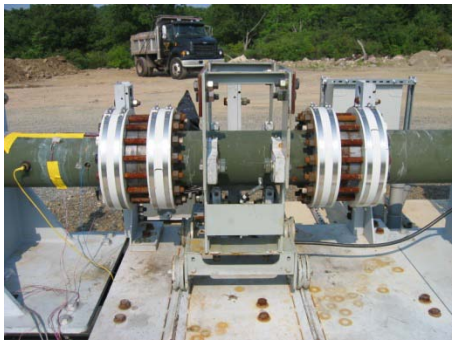

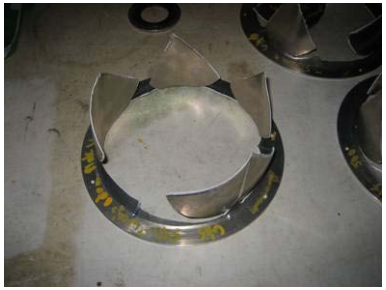

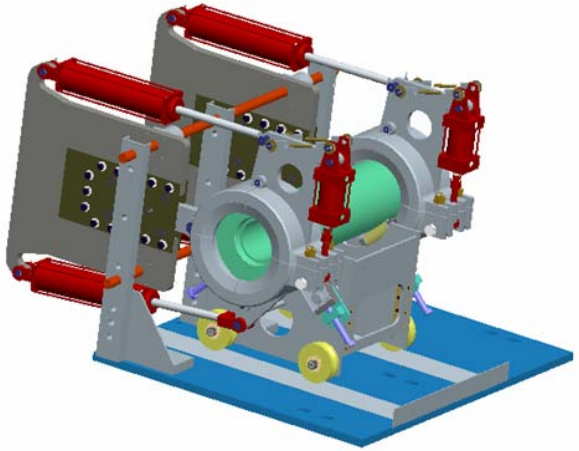

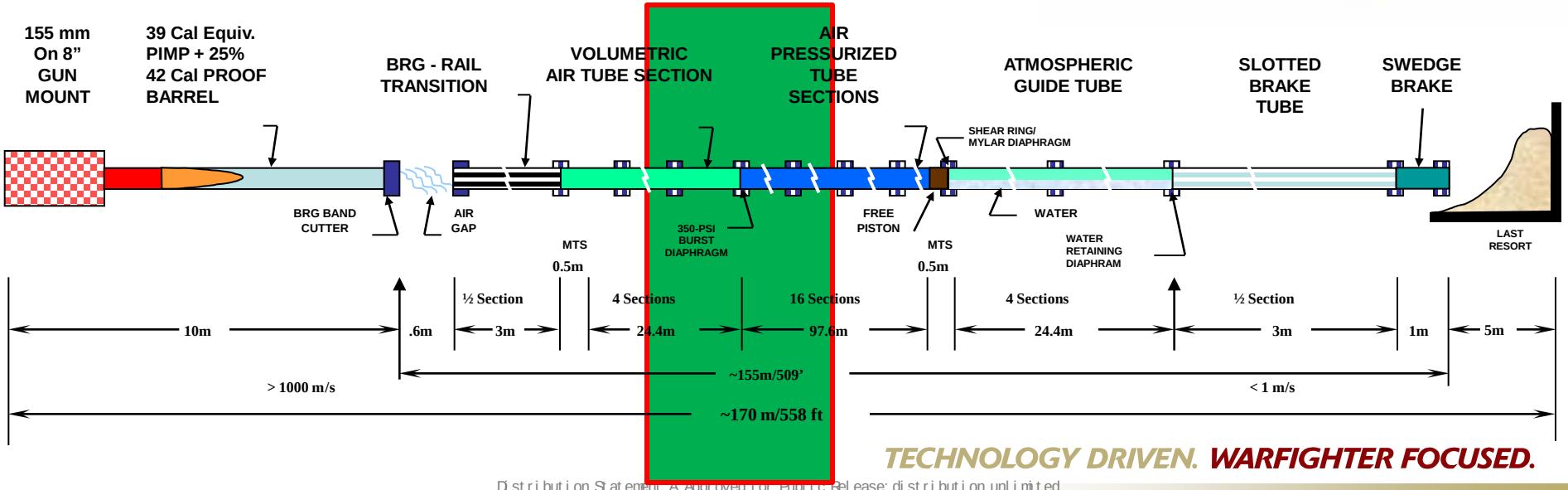

TECHNOLOGY DRIVEN. WARFIGHTER FOCUSED.

Distribution Statement "A" Approved for Public Release; distribution unlimited.

HOW DOES IT WORK?

- Projectile enters pressurized section
  - Shock propagates to begin a free piston moving against water resistance
  - Water builds up and adds mass to the piston (transfer of momentum)
- Projectile is decelerated
- Piston is destroyed and ejected with the water

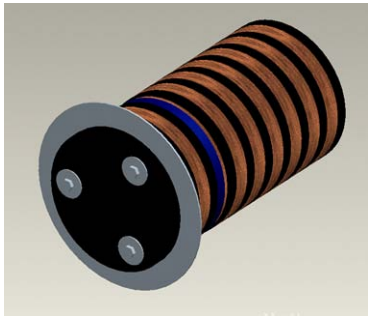

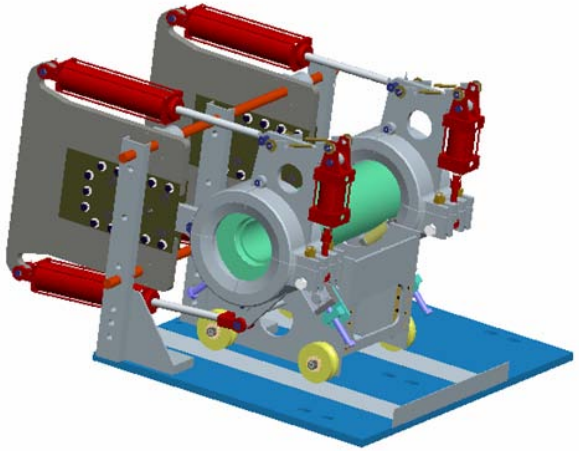

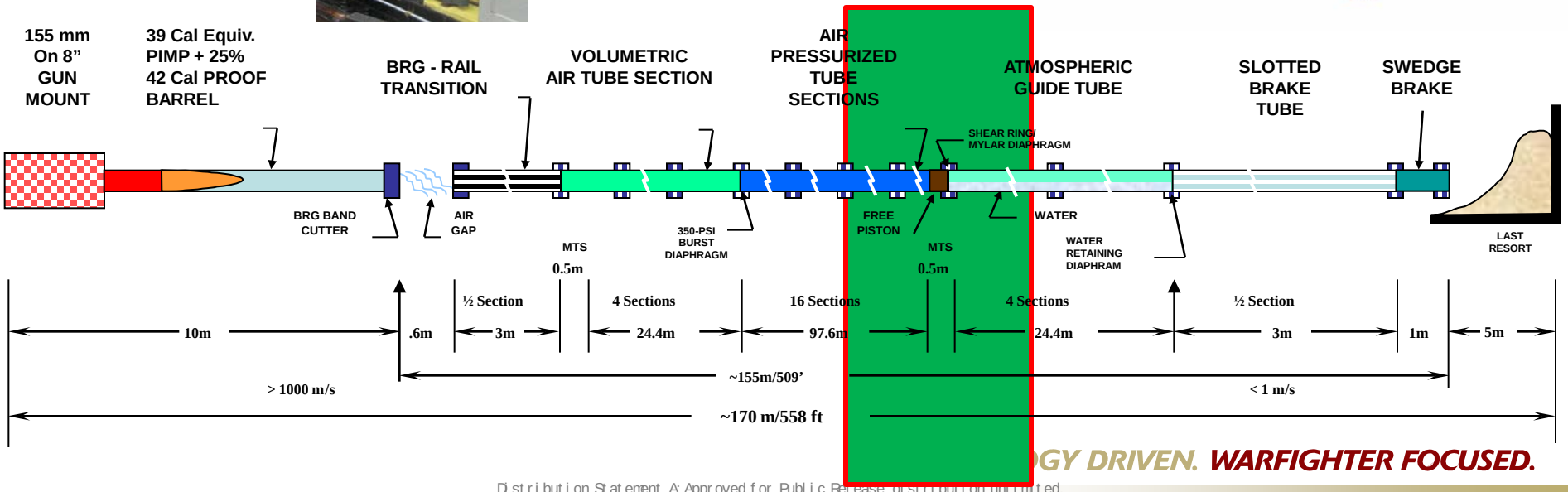

Distribution Statement A: Approved for Public Release, distribution unlimited.

HOW DOES IT WORK?

- Water & air mixture is ejected through slotted tube
- Projectile comes to rest in a recovery section

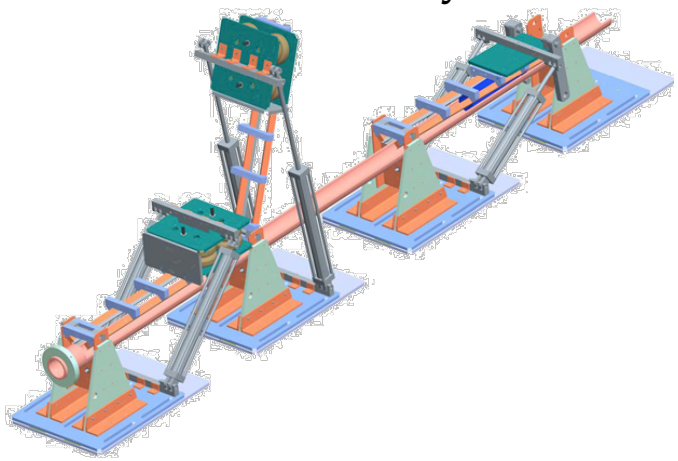

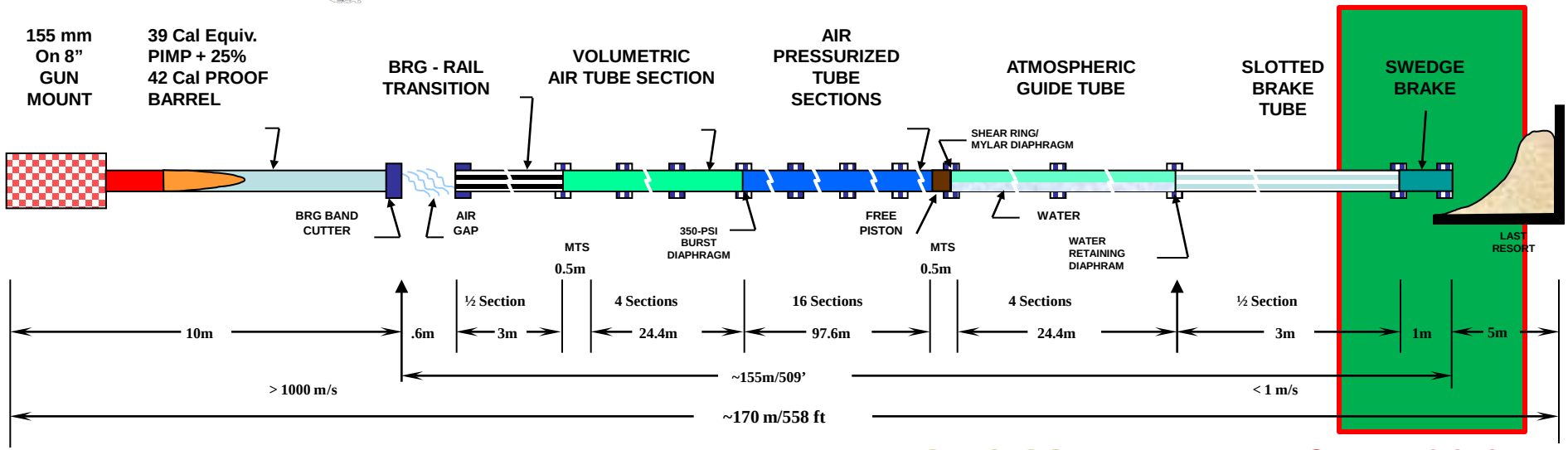

TECHNOLOGY DRIVEN. WARFIGHTER FOCUSED.

Distribution Statement A: Approved for Public Release; distribution unlimited.

TESTED HARDWARE

- GPS housings & cards
- Inertial Measurement Units (IMU's)
- Control actuation system (CAS)
- Data Hold Batteries (DHB)
- Firing Module Subsystem (FMS)
- Crystal Oscillators
- Ignition safety subsystems – (ISS)
- Excalibur projectile – mass sim.
- Electronic Safe and Arm Device – (ESAD)
- Guidance and Navigation Unit (GNU)
- On-board-recorders (OBR)
- Multiple high-g survivable/reusable projectiles
- Slip-band Obturators
- Fuze Safe & Arm (FSA)
- IR Cameras

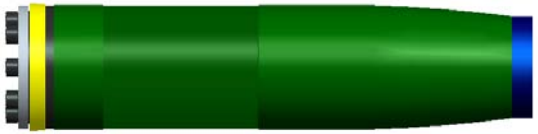

M483A1 Cargo Carrier

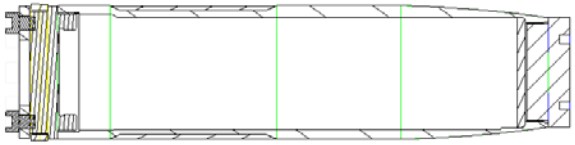

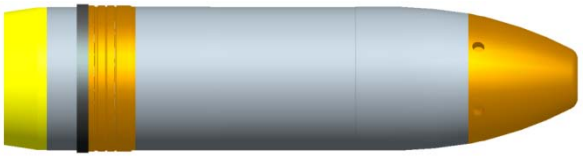

Scabbard – GNU & Fuze carrier

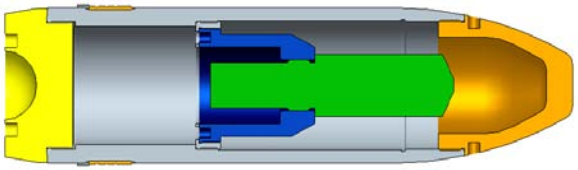

Distribution Statement A: Approved for Public Release; distribution unlimited.

ON-BOARD-RECORDER ACCELEROMETER DATA

MACS/5 M232A1@70ºF / M199 TUBE / February 10, 2011

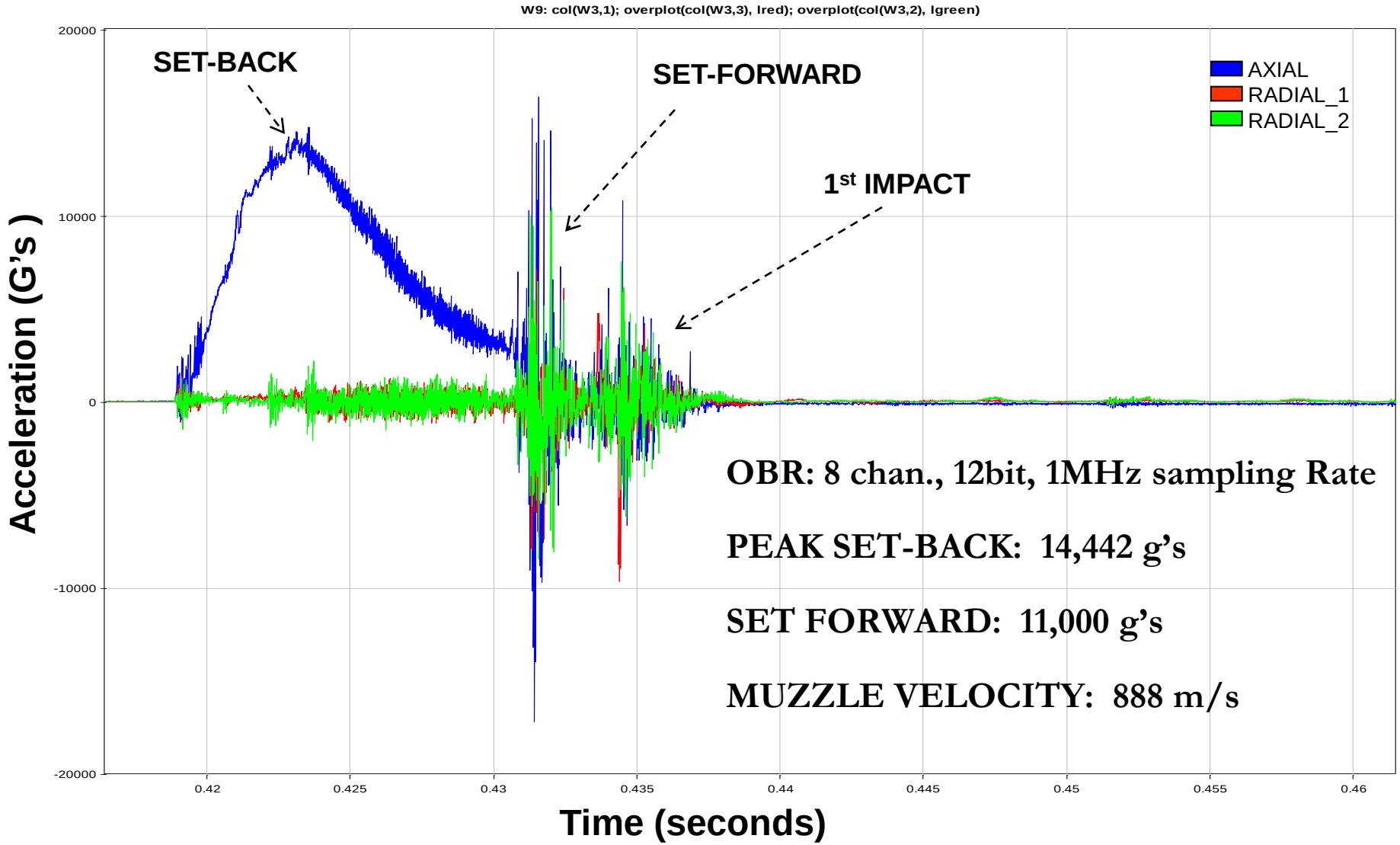

OBR: 8 chan., 12bit, 1MHz sampling Rate

PEAK SET-BACK: 14,442 g's

SET FORWARD: 11,000 g's

MUZZLE VELOCITY: 888 m/s

Distribution Statement A: Approved for Public Release; distribution unlimited.

1st IMPACT G-LEVEL REDUCTION

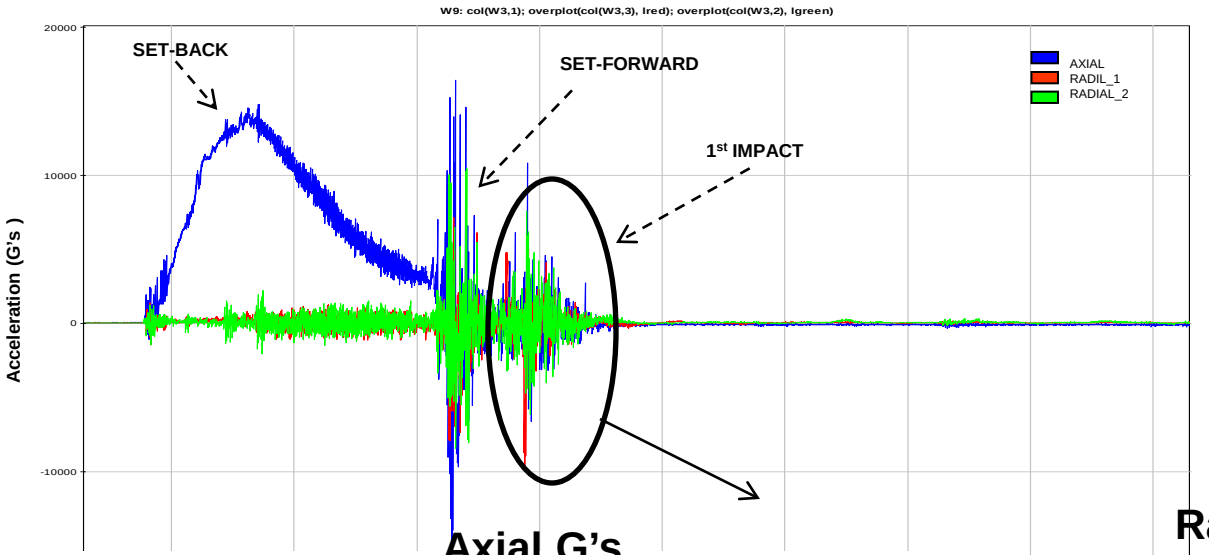

- Current entrance tube is tapered 1/8″ over 5 ft.
- New tube design is straight with tube adapter
- Help reduce incoming tip-off angle

Axial G's

Radial G's

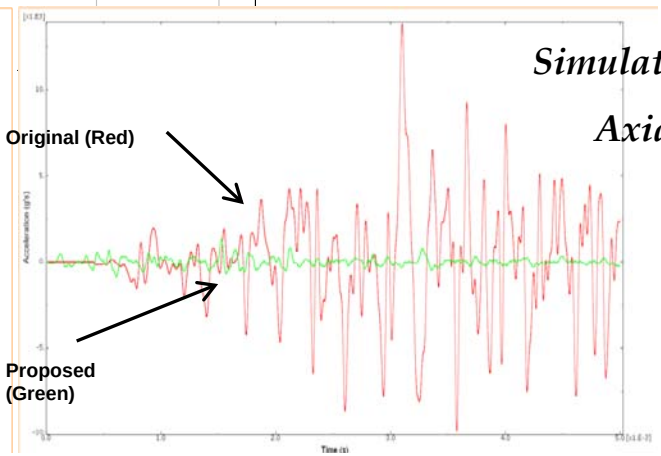

Simulation Results of Axial & Radial g's

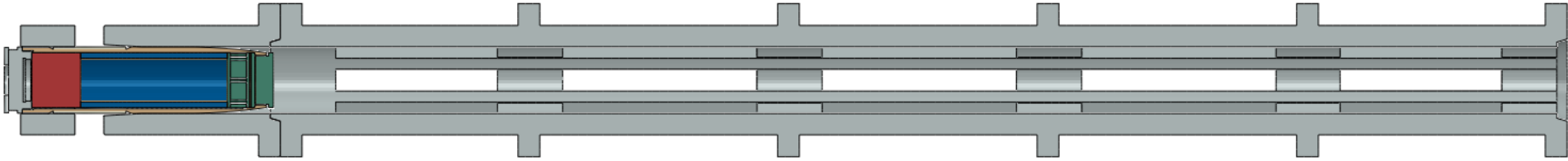

FUTURE SOFT RECOVERY SYSTEMS

- Current MCA in-place for 2015
- Funding for enclosure & foundations
- Future funding needed for each catch system build

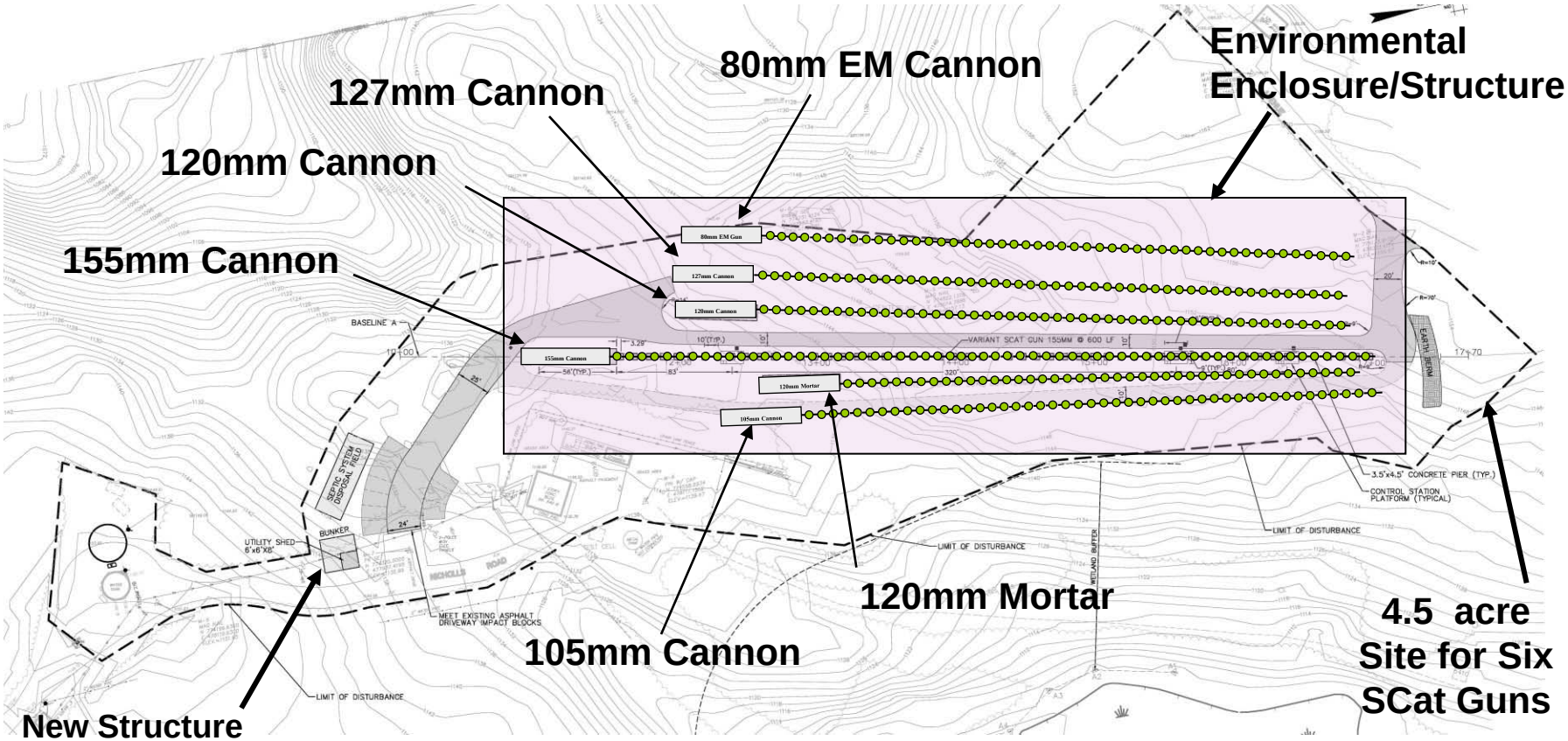

TECHNOLOGY DRIVEN. WARFIGHTER FOCUSED.

Distribution Statement A: Approved for Public Release; distribution unlimited.

SUMMARY

- System is currently supporting customer testing (up to 17,000 g's)
  - Propellant charges MACS 1 thru PIMP +15%
  - Spin and Non-spinning projectiles
- 488 total shots with SCat Gun System
  - 376 Customer Test Shots
  - 112 ARDEC prove-out/developmental Shots
- > 50 year life expectancy
- Future Soft Catch systems slated on MCA for 2015
- Cost Avoidance to Programs to date: ~$14M

Distribution Statement A: Approved for Public Release; distribution unlimited.

QUESTIONS ?

TESTING POC's		
Greg Hader	greg.hader@us.army.mil	973.724.7733
Bob Marchak	robert.marchak@us.army.mil	973.724.2746
Nigel Gray	nigel.j.gray@us.army.mil	973.724.4594

- **Typical Test Day – 4 shots - (~$28k)***
  - **The test cost includes:**
    - **Test range and system support**
    - **On-board-recorder & support**
    - **Projectile/cargo carrier**
    - **Gun Crew and Propellant**
    - **SCat gun consumable items**
    - **Data reduction & reports**
    - **Structural Analysis**

SCAT Gun Team

Picatinny Arsenal

*Cost will vary depending on customer test plan specifics.

TECHNOLOGY DRIVEN. WARFIGHTER FOCUSED.

Distribution Statement A: Approved for Public Release; distribution unlimited.