LARGE ENGINE VULNERABILITY TO MANPADS

Greg Czarnecki (46th Test Group-WPAFB)
Joe Manchor (NAWC-China Lake)
Gautam Shah (NASA-Langley)
Sunil Sinha (General Electric)
John Haas (Skyward Ltd)

Test Objectives

- Assess engine damage, engine performance degradation, and collateral damage as a function of MANPADS impact location
- Produce high-fidelity damage predictions (correlate with test results to generate confidence in modeling methodology)
- Assess aircraft safety-of-flight given MANPADS damage

Technical Approach

Focus on the CF6-50 engine…typical of B747, KC-10, and A300 aircraft

- CF6-50 is also representative of other large engines

Model-test-model building block approach

- Generate high-fidelity (LS-DYNA) damage predictions for each of two proposed shotlines
- Conduct controlled tests that correspond exactly to the modeled condition
- Consider the amount/location of damage to predict aircraft safety-of-flight
  - Assess aircraft's ability to maintain controlled flight (to include maneuver and land)

Test Team Responsibilities

46th Test Group (WPAFB) – Team lead

- Prepare the test plan; Procure and instrument test hardware; Design and fabricate the test fixture; Develop a controller for the engine test article; Conduct engine-idle runs; Direct the tests and prepare the test report

General Electric – Consultation and modeling

- Assess the engine's readiness-to-test; Advise concerning engine operation; Generate damage predictions; Assess post-test engine damage

NAWC (China Lake) – Test execution

- Configure the test range; Conduct dress rehearsal runs; Execute the tests; Reduce and deliver test data

NASA – Safety of flight modeling

- Determine aircraft components affected by missile detonation and uncontained engine debris; Determine aircraft safety-of-flight given damage

Test Scenario

Match test conditions to those experienced by a large transport aircraft at the time of a likely MANPADS hit

- Climb-out from normal take off
  - 6000-8000 feet
  - 225 knots
- MANPADS impact 30º off the tail at 1,200 f/s
  - Shot #1 into LPT
  - Shot #2 into HPC

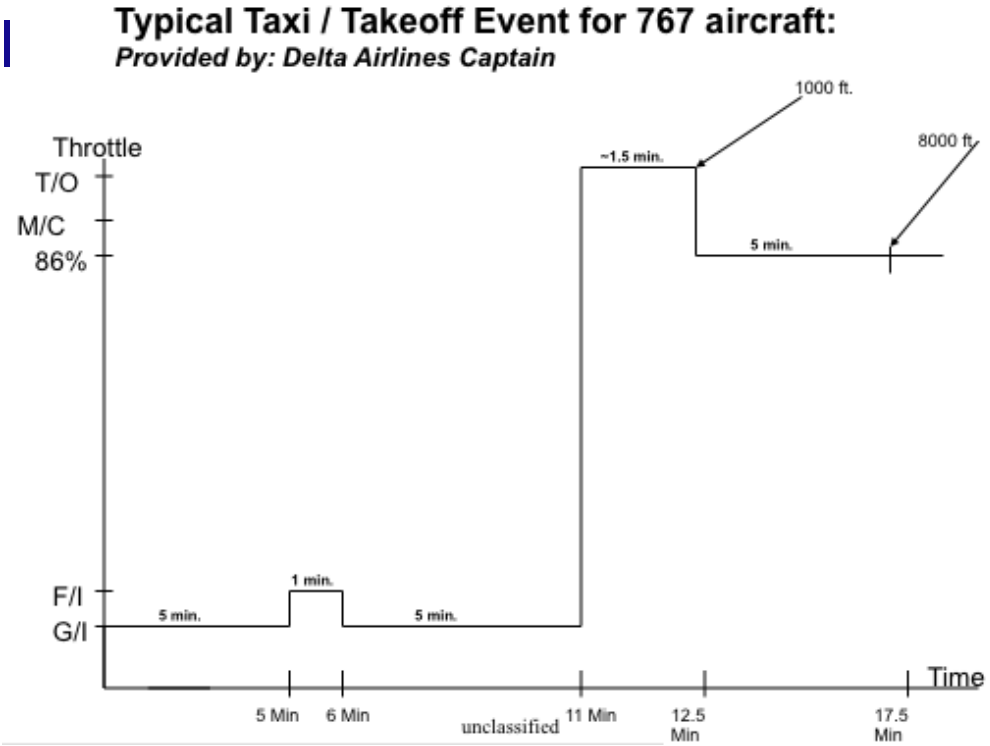

Projected Shotlines

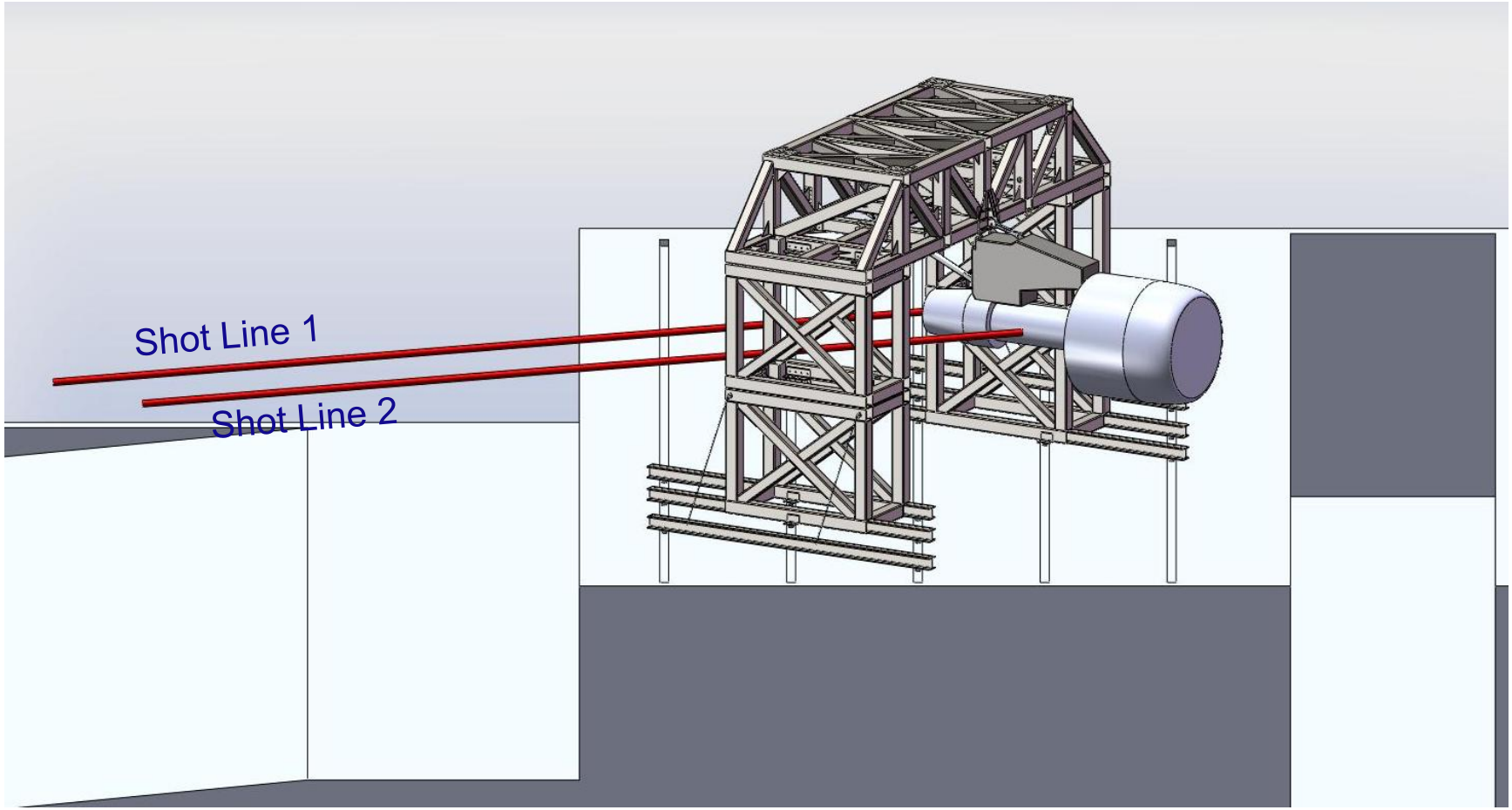

Test/Shotline #1

Shotline denoted by red arrow; Impact point on LPT denoted by red dot

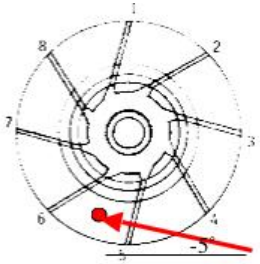

Aft View

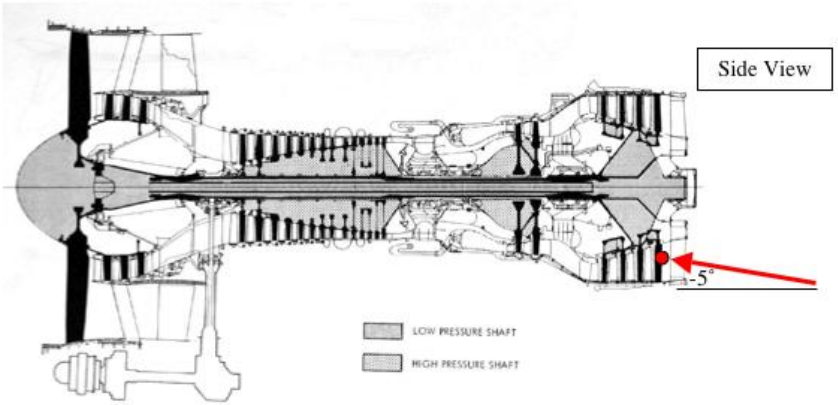

Side View

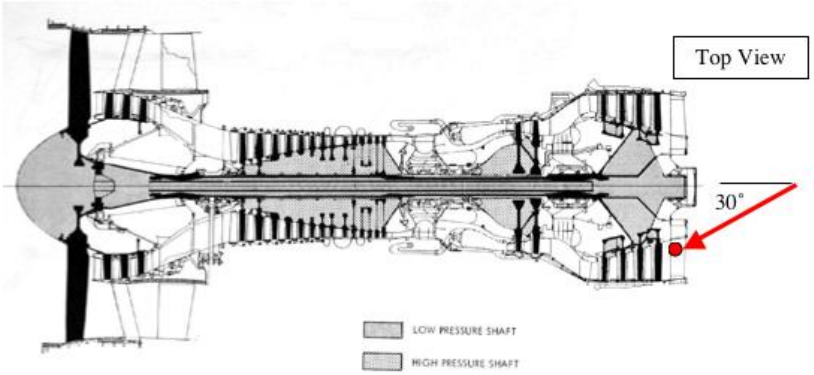

Top View

Test/Shotline #2

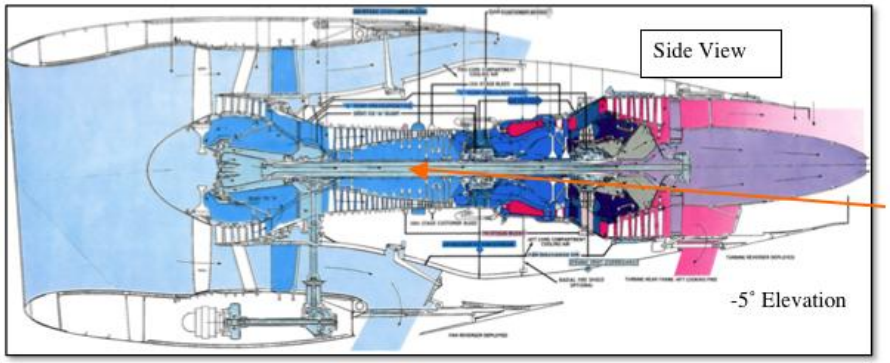

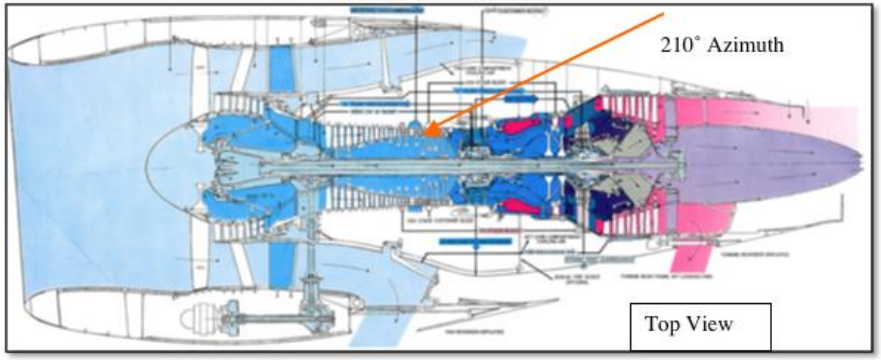

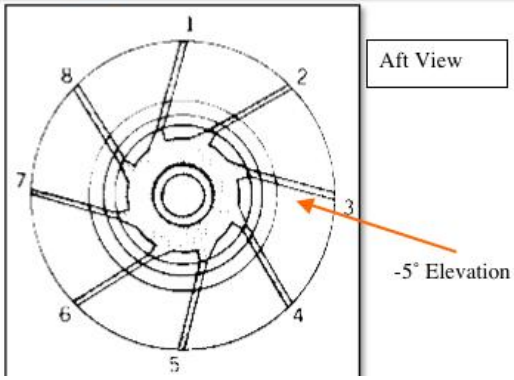

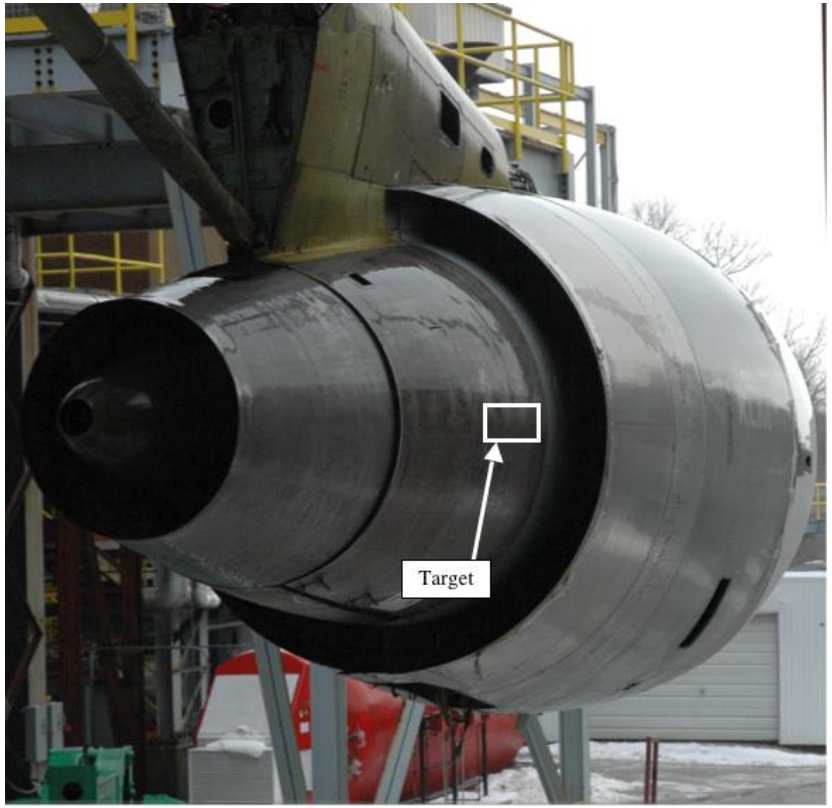

Missile Model

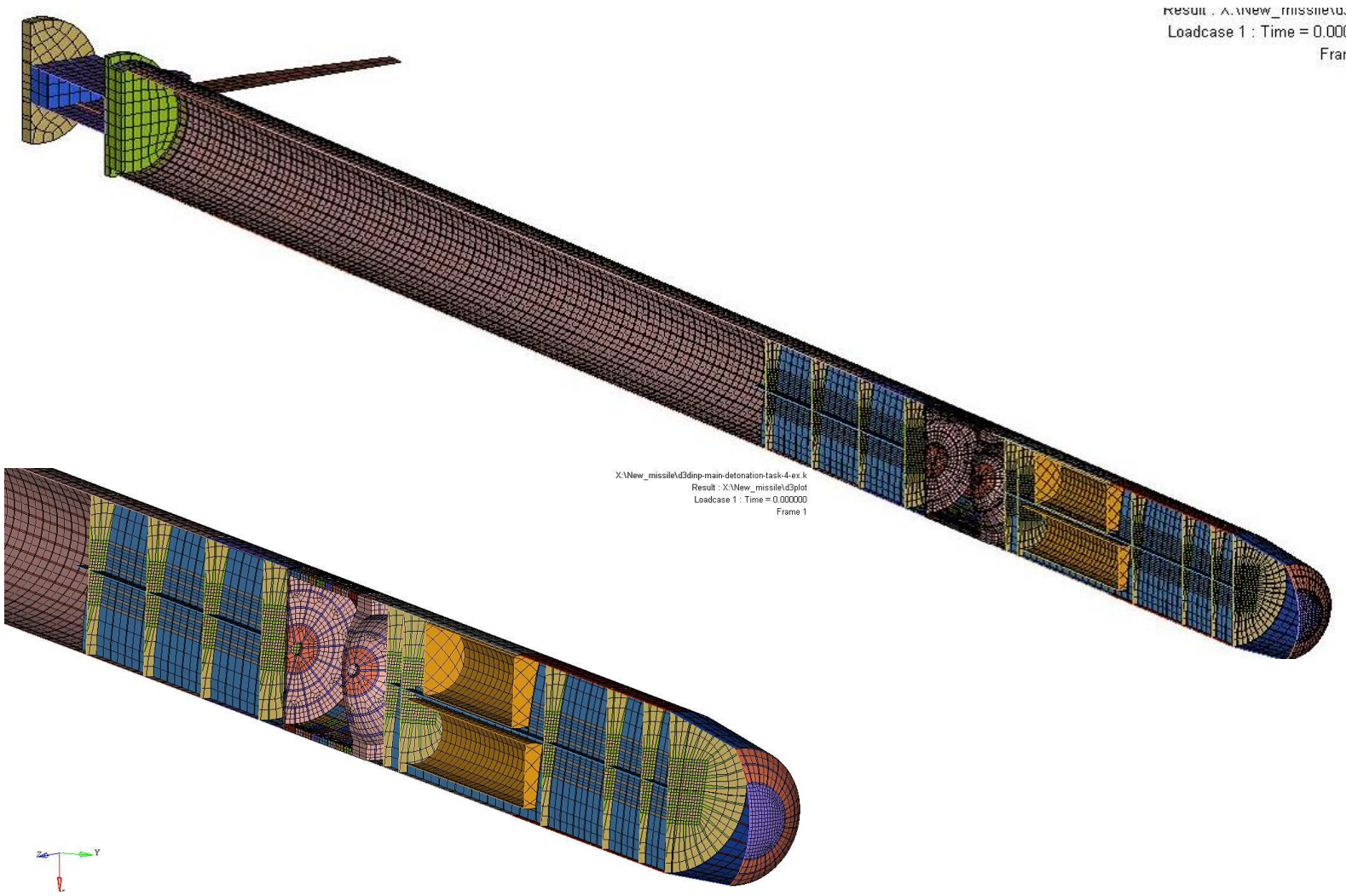

Damage Predictions

- Test/Shotline #1

Damage Predictions

- Test/Shotline #1

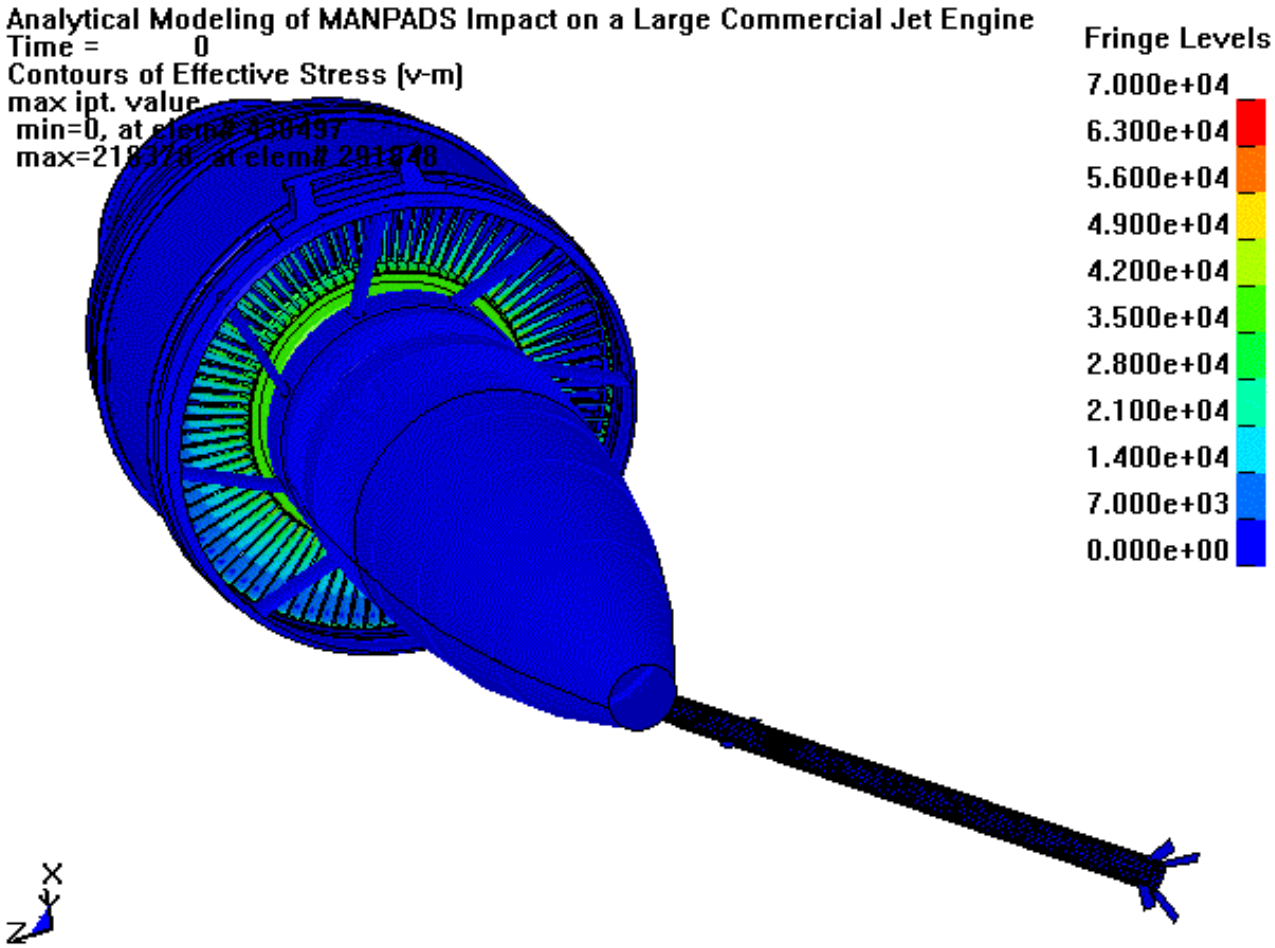

Damage Predictions

- Test/Shotline #1

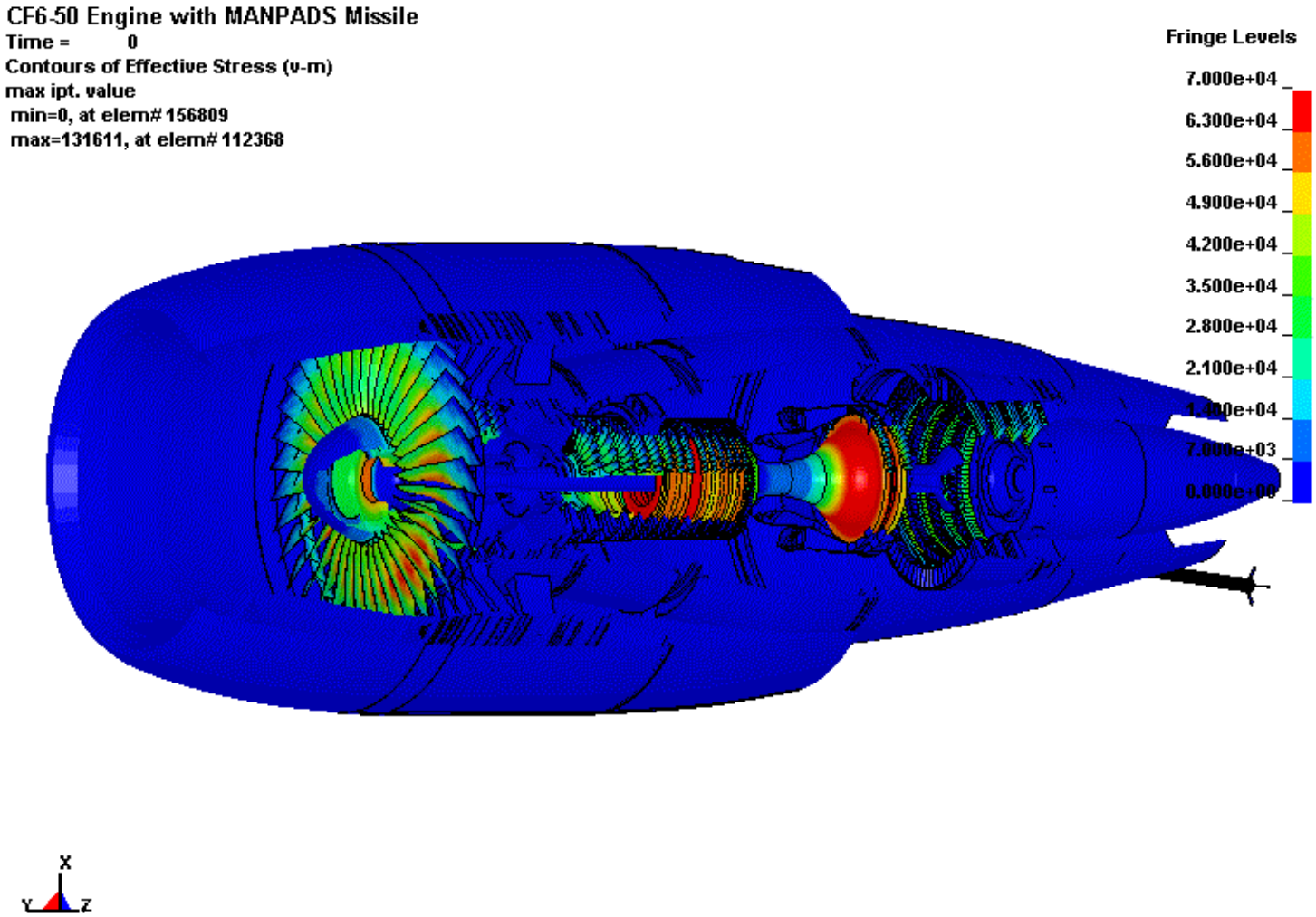

Damage Predictions

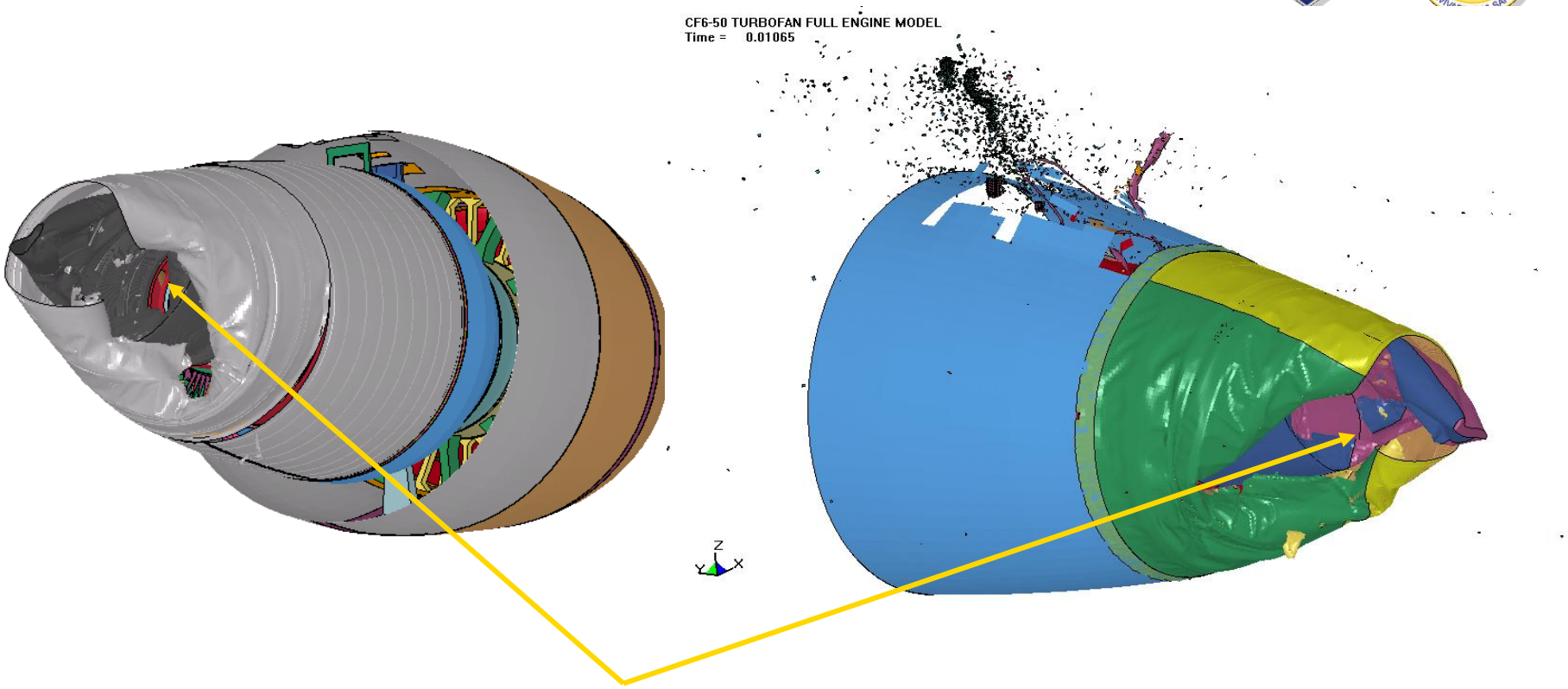

Significant damage to the AFT-end stator structure

View of the analytically predicted damage (along the respective shotline) to a rotating CF6-50 Engine with missile with detonating warhead

Damage Predictions

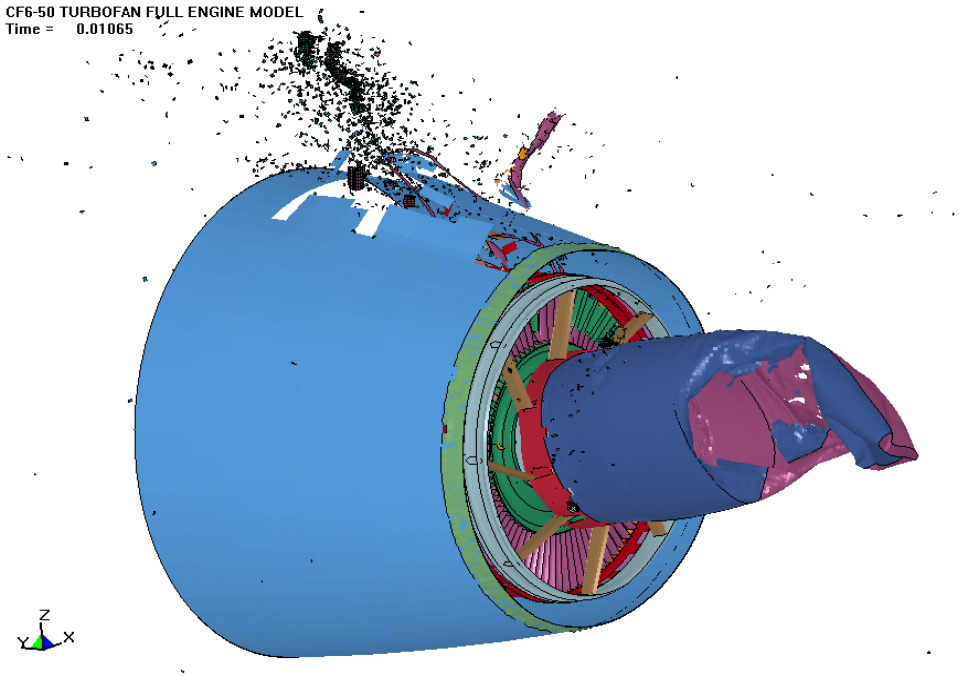

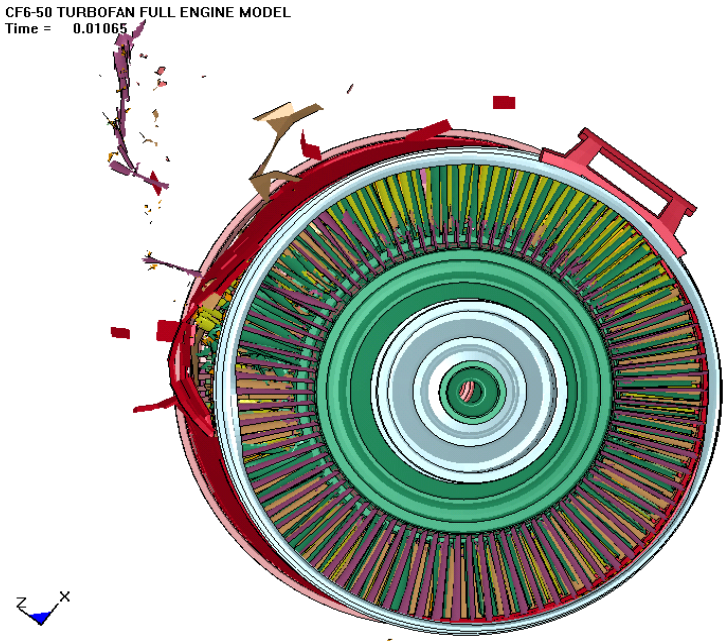

Component level damage due to detonating missile

Use or disclosure of data contained on this sheet is subject to the restrictions on the cover or first page.

Damage Predictions

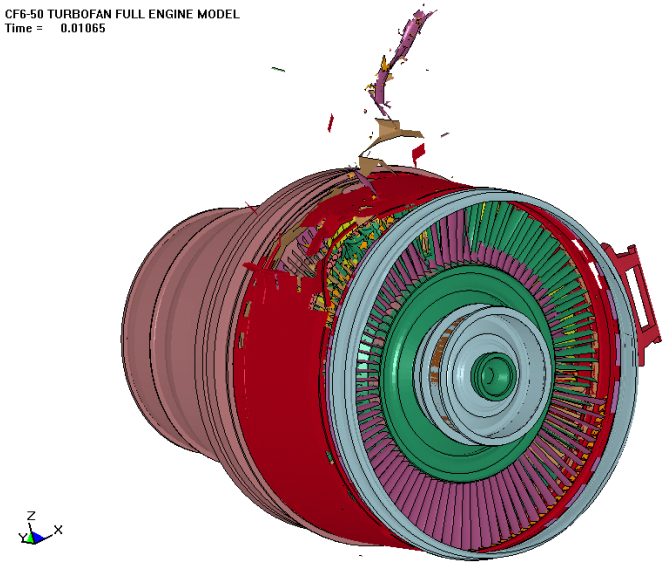

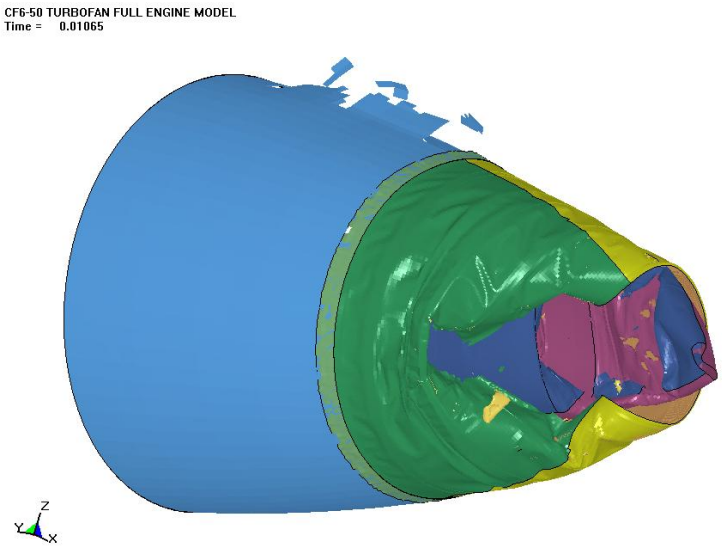

Another view of the Component level damage due to detonating missile

Use or disclosure of data contained on this sheet is subject to the restrictions on the cover or first page.

Damage Predictions

- Test/Shotline #2

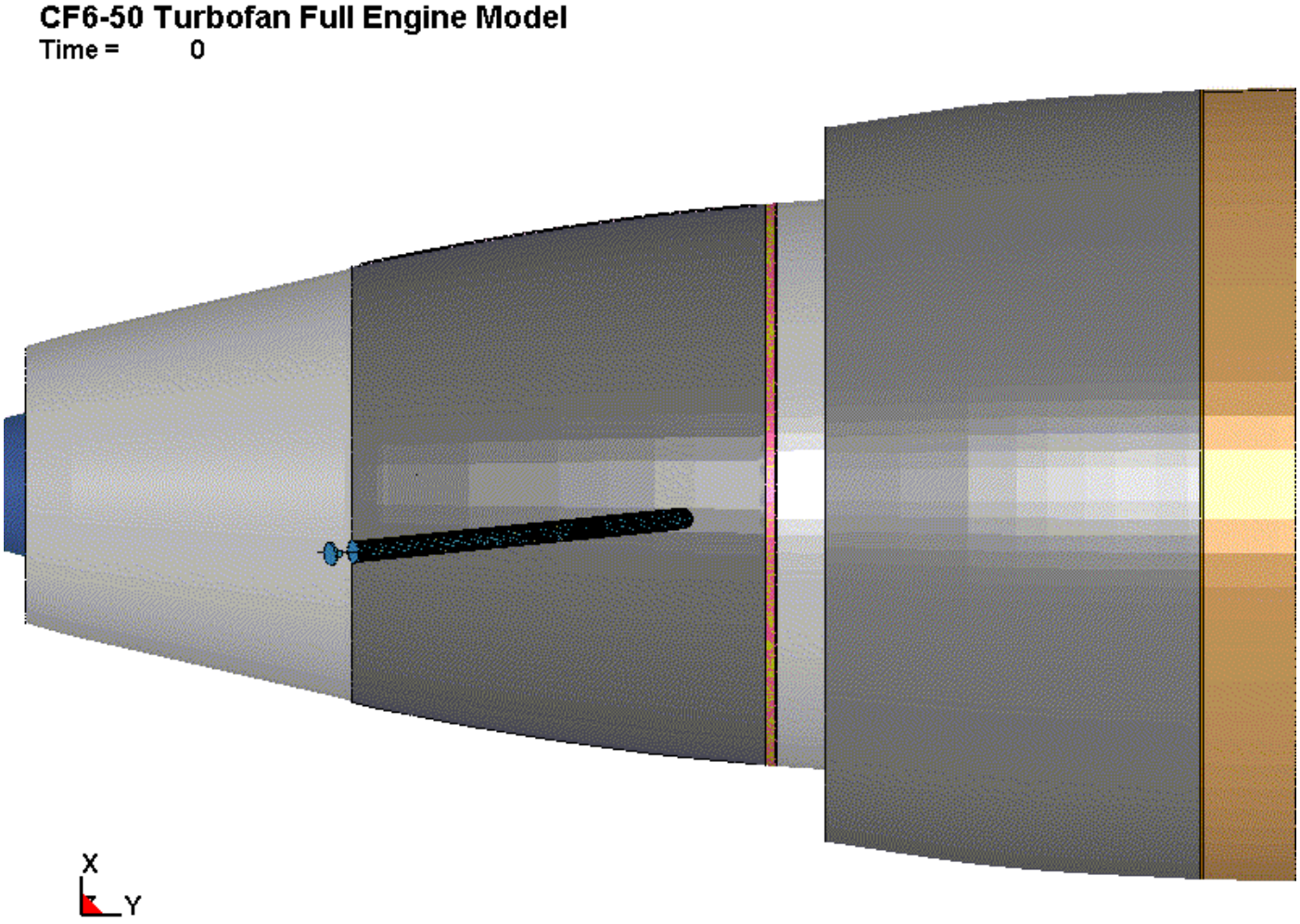

Damage Predictions

- Test/Shotline #2

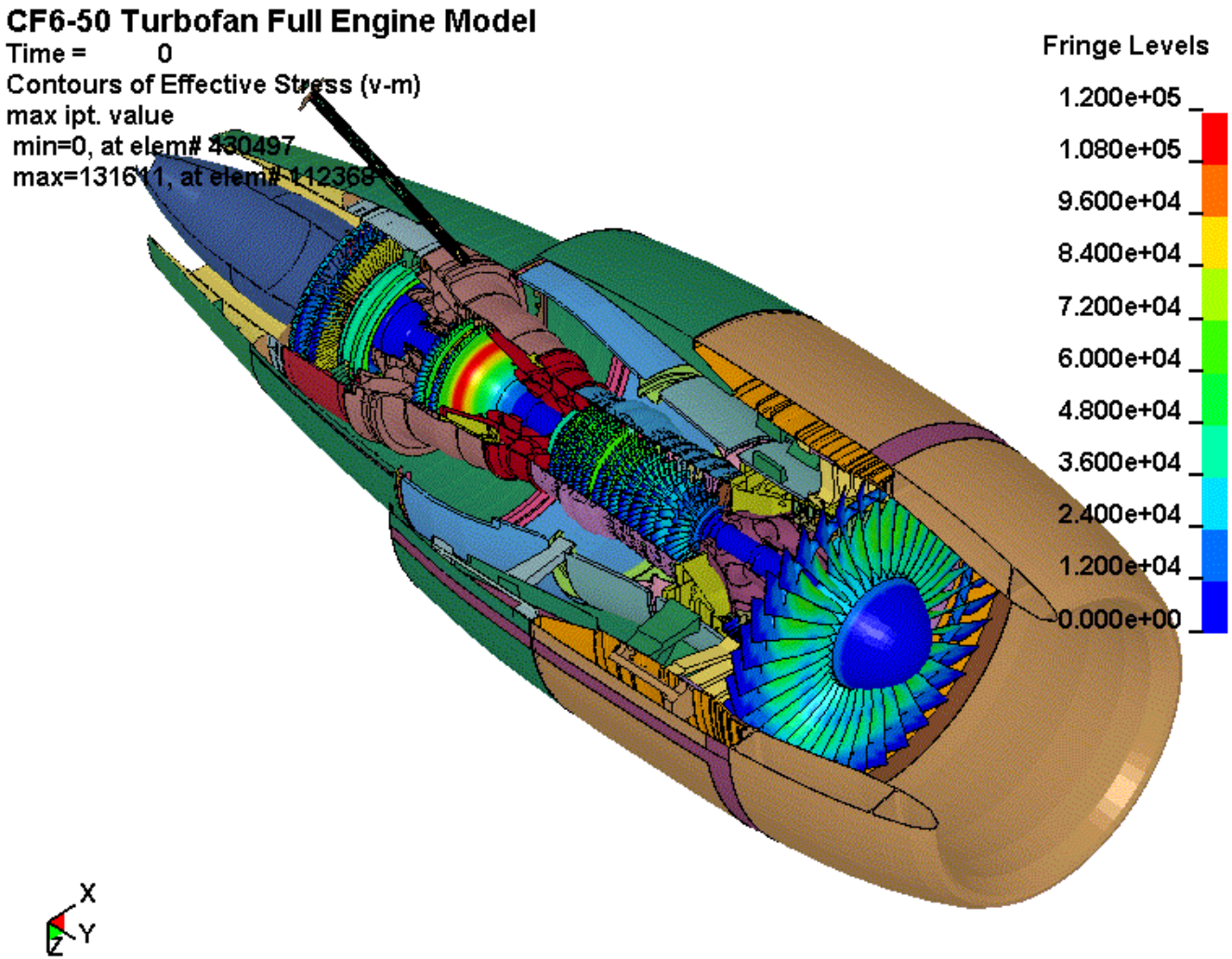

Damage Predictions

- Test/Shotline #2

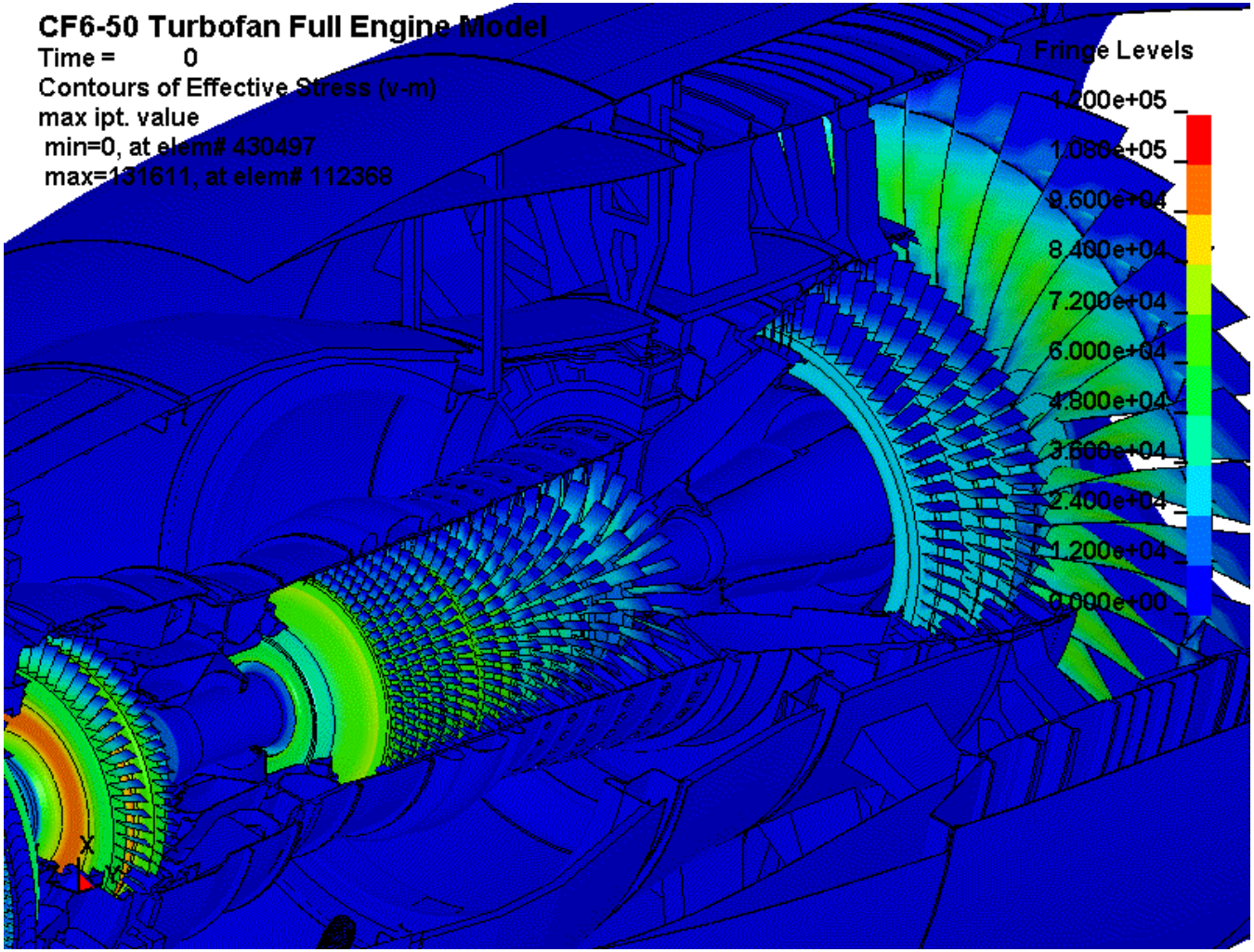

Damage Predictions

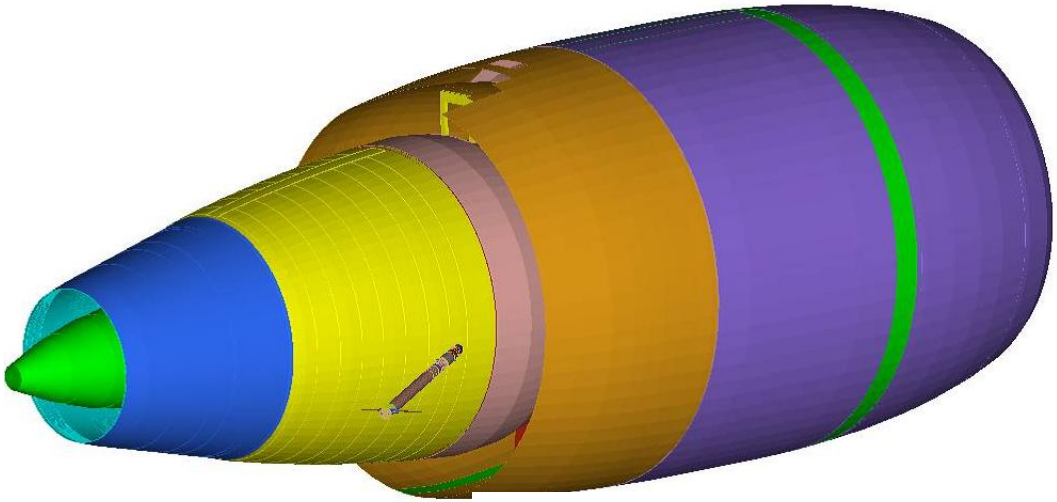

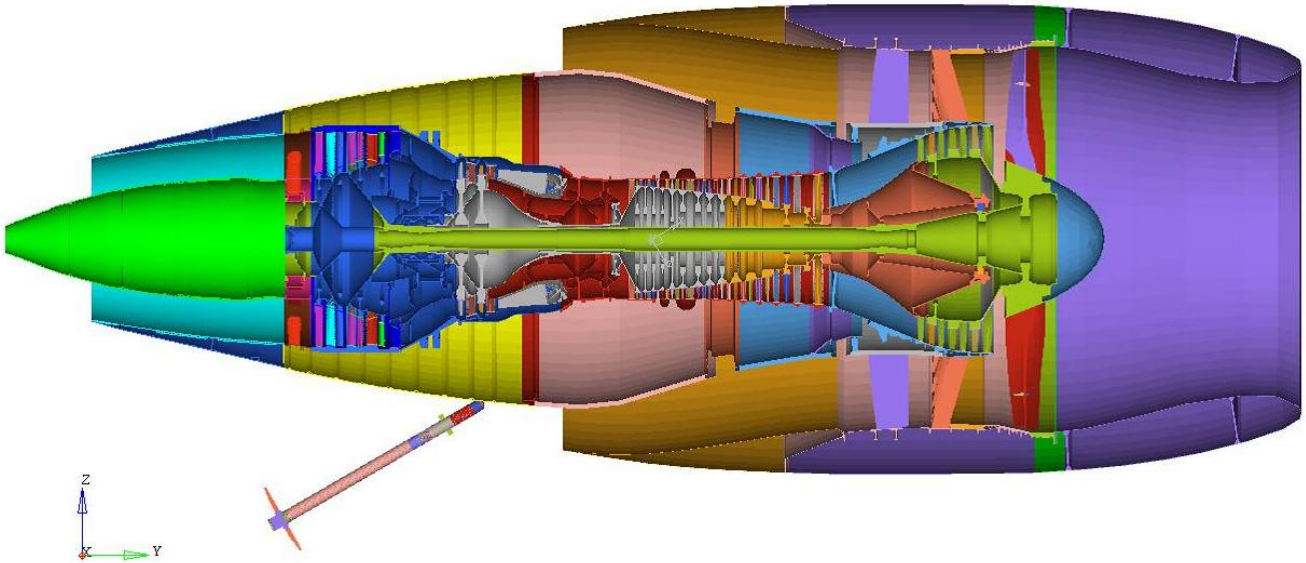

Damage Predictions

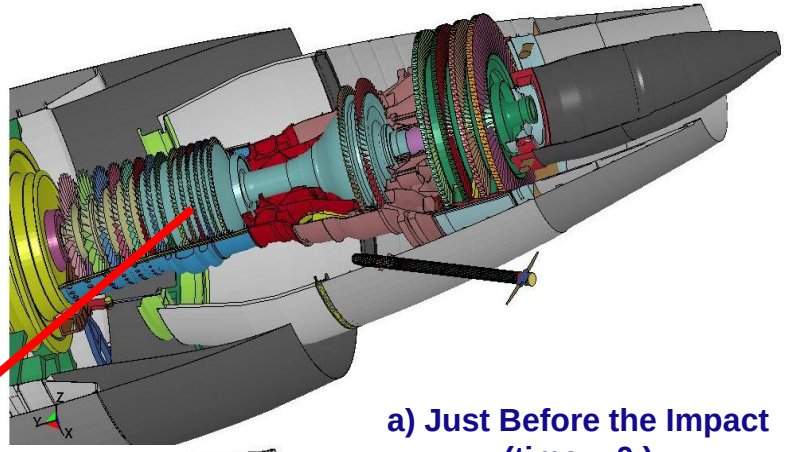

a) Just Before the Impact
(time = 0)

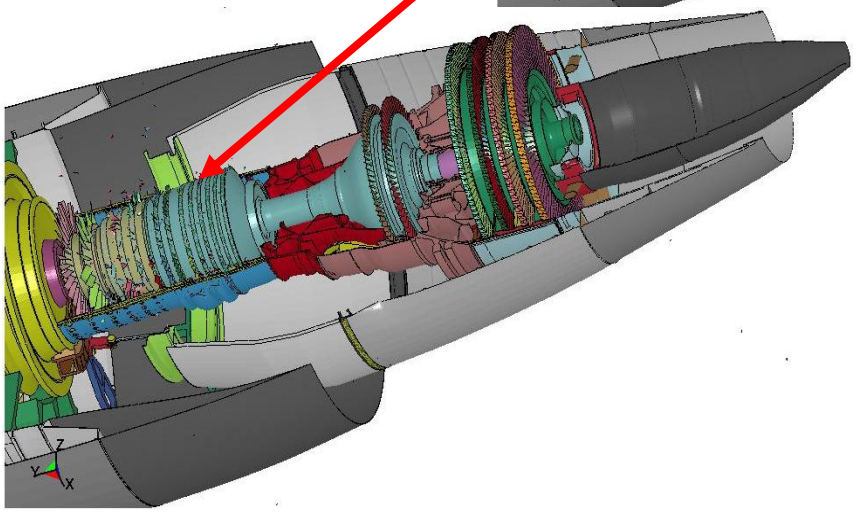

b) Damage After the
Impact

Test Setup

Pretests

Pretests conducted to…

- Certify engine test article operation
- Tune the LabView engine controller
- Verify suitability of the test procedure
- Verify function of the data acquisition systems

Engine-idle pretests conducted at WPAFB

- Identified/replaced dysfunctional engine components
- Debugged the LabView engine control algorithm

Pretests conducted at China Lake

- Dry and wet engine runs to ensure engine integrity
- Full-speed engine runs to ensure engine performance
- Full-up dress rehearsal runs to ensure CF6-50 engine test assets and instrumentation systems were able to interact with the China Lake HIVAS airflow system

Test #1

Test Date: October 31, 2011

Missile Impact Velocity: 1,194 f/s

Missile Elevation Angle: -5.8˚ El, 30˚ Az

Test Outcome: Missile impacted/detonated on the engine's LPT as planned; Fire was ignited; Several compressor stalls within seconds; Debris expelled out rear of engine; Missile fragments hit witness panels

Test #1 Video

Test #1 Results Summary

- Direct engine damage
  - Engine quickly lost thrust
    - T=0 sec (39,500 Fn), T=1 (16,000 Fn), T=2 (5,000 Fn), T=3 (3,000 Fn), T=4 (2,000 Fn), T=5 (900 Fn), T=10 (100 Fn)
  - Most LPT blades were removed
  - LPT case ruptured and almost detached
- Fire initiated in the nacelle and pylon
  - Both fire bottles were discharged before fire was extinguished
  - Fire was brief…not a significant contributor to damage
- Collateral damage (indicated by damage to surrounding witness panels)
  - Mostly missile fragment damage
  - Most engine parts ejected out of the rear of the engine (scattered up to 175 yards aft of the engine)…could have posed a threat to aft portions of the wing or fuselage

Test #1 Results Summary

Tail cone and exhaust nozzles mostly removed

Extensive damage to LPT and LPT case

Debris field extended 175 yds aft of engine

Test #2

Test Date: December 6, 2011

Missile Impact Velocity: 1,197 f/s

Missile Elevation Angle: -5˚ El, 25˚ Az

Test Outcome: Missile impacted/detonated on the HPC as planned; Large fire ignited..difficult to extinguish; Some evidence of a compressor stall; Little engine debris observed; Missile fragments hit witness panels

Test #2 Video

Test #2 Results Summary

- Direct engine damage
  - Right side cowlings detached and damaged
  - Engine core not penetrated
- Engine lost thrust rapidly
  - Pressure sensing line to Mechanical Engine Control (MEC) was damaged; resulted in engine immediately reverting to idle
  - FADEC-equipped engines would likely not have reverted to idle
- Fire initiated in the nacelle and pylon
  - Both fire bottles were discharged…followed by aqueous fire fighting foam (AFFF) to extinguish
  - Fire would have been worse if engine had not reverted to idle (greater fuel flow)
- Collateral damage indicated by damage to witness panels… mostly warhead fragmentation

Time	Thrust (pounds)
0	39500
.1	18700
.2	9900
.3	2100
.4	2025
.5	1600
.6	1500
.7	1400
.8	1350
.9	1300
1.0	1260

Test #2 Results Summary

Fire Damage Inside Nacelle

Nacelle Cowlings Removed

Impact Location on Engine Core

Debris Damage on Witness Panels

Summary

- Large engine vulnerability to MANPADS tests successfully completed
  - Test objectives achieved…provided critical understanding of large engine vulnerability to MANPADS
    - Supports operational risk assessments
    - Supports IRCM investment decisions
  - Damage roughly correlates with pretest predictions, but model-runs are time-limited
  - Detailed damage assessment continues…to include NASA's assessment of post-impact safety of flight