Sting Ray Torpedo - IM Warhead System Insertion

Chuck Spencer
Torpedoes IM Capability Lead
BAE Systems Maritime Services, Broad Oak, Portsmouth
e-mail : chuck.spencer@baesystems.com

Sting Ray Torpedo Overview

- Lightweight Torpedo - surface ship or aircraft (rotary and fixed wing) deployed.
- 2.6m x 0.325m, 267Kg
- Primarily Anti-Submarine Warfare (ASW) with limited Anti-Surface Ship (ASuW) capability.
- Electric propulsion using Sea Water activated battery.
- Directed energy Warhead.
- In-service in UK, Norway, Egypt, Thailand, Romania
- Mod 1 Capability Upgrade introduced to counter ‘stealth’ submarines and advanced countermeasures & decoys.

IM Warhead System

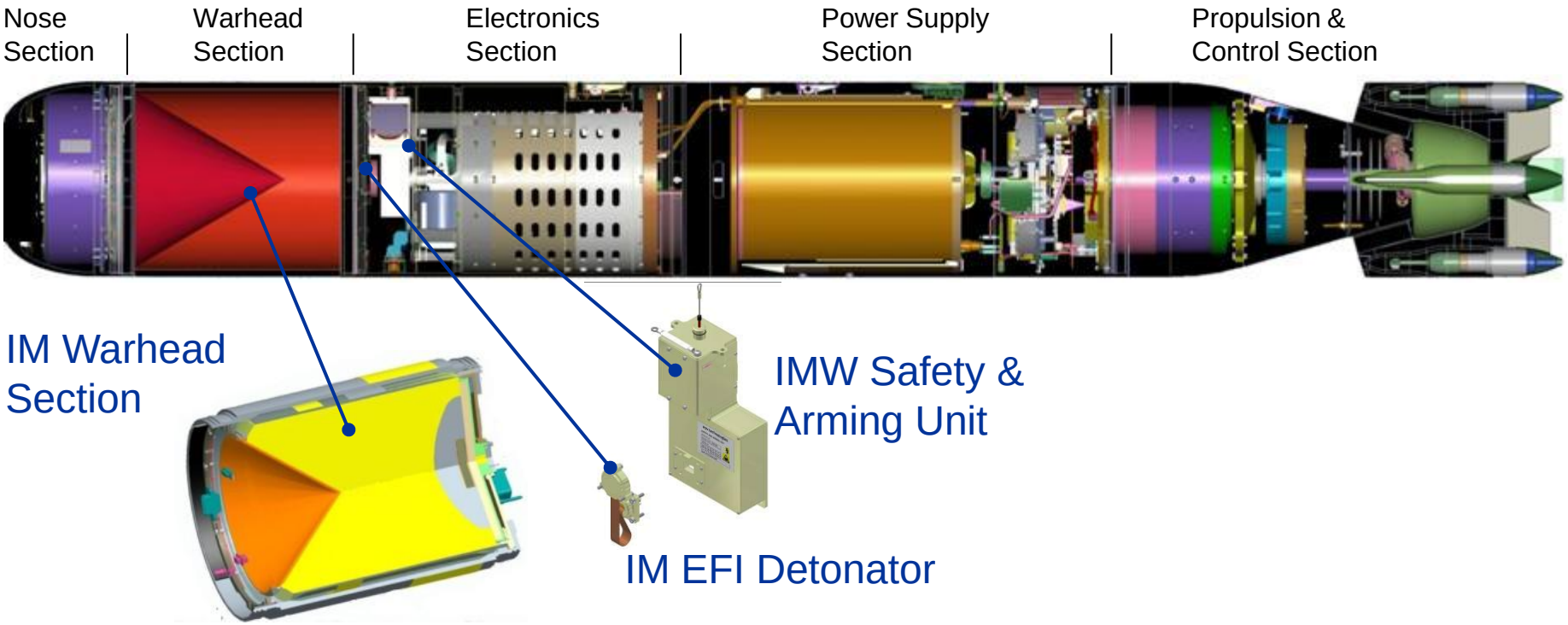

- IM Warhead System comprises 3 major Components
  - Warhead Section - Hull Section, Charge Assembly, Through Cables
  - Safety & Arming Unit - Mod 0 Sensor Assembly, New casing, New Electronics - Locates in the electronics Section
  - EFI (Exploding Foil Initiator) Detonator Assembly

IM Warhead Design Challenges

- Balance between IM sensitivity and warhead yield
  - IM Requirements – Munition Threat Analysis - Fast & Slow Heating, Bullet Attack, Fragment Impact, Sympathetic Reaction (Shaped-charge – no test due to critical diameter of energetics & bare weapon in magazine).
  - Performance – precision shaped charge jet required for lethality against SSK to SSBN Submarines – design aim for equivalent or better performance than Mod 0 Warhead (high yield HMX/TNT/RDX fill).
- Environment
  - Torpedo is required to withstand extreme external pressure to enable attack at maximum Submarine depth (+ margin) – mitigated by modelling and pressure burst test to understand failure mechanism.
  - High shock-loading for air-launch parachute deployment and water-entry + cold / hot temperature extremes and thermal shock.
- Performance
  - Mod 0 Torpedo originally designed for blast warhead so stand-off for shaped charge not ideal – mitigated by nose section design to allow jet to develop.

IM Warhead Section Design

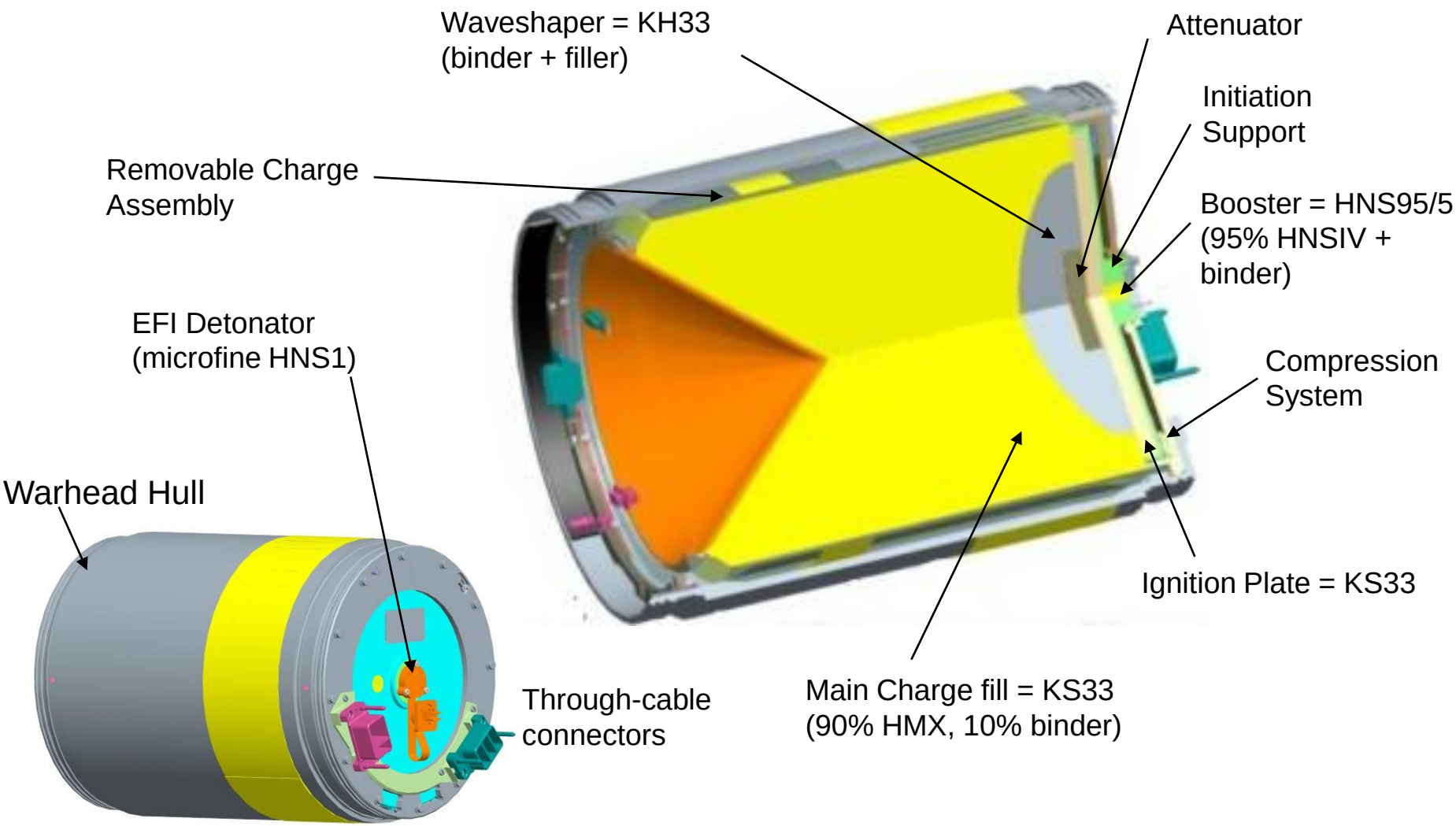

IM Mitigation

Selection of Energetic Materials :-

- Main Charge - KS33 - 90% HMX + Binder (changed from initial KS32 (85%) to achieve operational performance requirement)
  - Evolved Sea Sparrow Missile (ESSM) Fragmentation Warhead
    - Mil. Std. Tests - Bullet Impact, Slow Heating, Fuel Fire, Fragment Impact, Sympathetic Reaction (packaged)
  - TAURUS pre-cursor shaped-charge
    - Mil. Std Tests - Sympathetic Reaction (simulated packaging), Fuel Fire, Bullet Attack
  - UK EMTAP Tests
    - No 22 - Gap Test, No 35 - Internal ignition, No 36 - Fragment, No 41 - Fast heating, No 42 - slow heating.
  - WIWEB Material Qualification
    - STANAG 4170

IM Mitigation

Selection of Energetic Materials :-

- Booster Pellet - HNS95/5
  - ALARM, ASRAAM & TAURUS
  - UK EMTAP Tests
    - No 35 - Internal ignition, No 41 - Fast heating, No 42 - slow heating
  - WIWEB Material Qualification - STANAG 4170
- Detonator Pellet - Microfine HNS
  - UK qualification in Sea Wolf
  - Characterised against P112
  - EFI technology is recommended for IM Detonators
  - UK Material Qualification (QinetiQ Testing) - STANAG 4170

IM Mitigation

Design Mitigation :-

- Heating - Venting in the event of pressure build-up :-
  - Shear rim around liner mounting
  - Shear bolts around rear cover plate

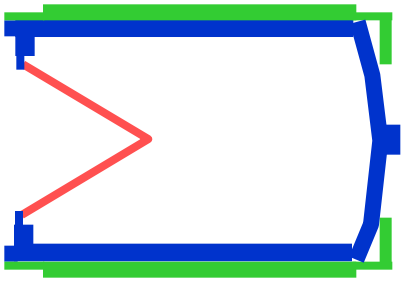

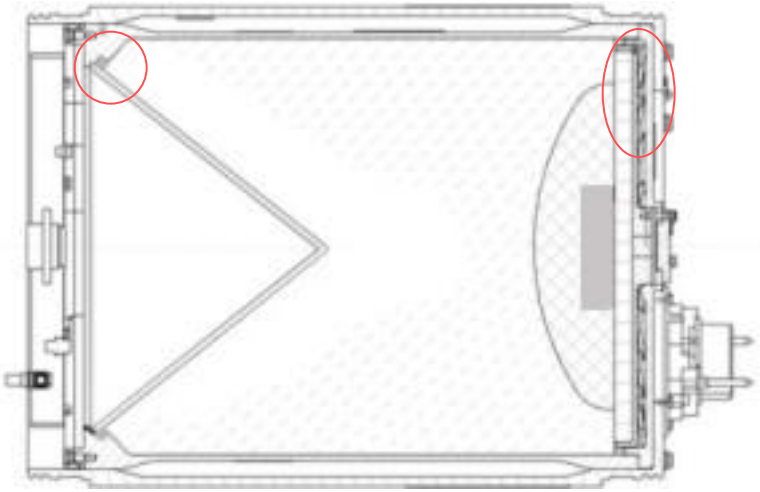

  - Venting mechanism assessed via Section Level Fuel Fire Test - indicated Type V
- Impact - Air gap between charge casing and hull (supporting design feature)

Confidence Tests

- EMTAP Tests + QinetiQ Vulnerability Assessment
  - Sympathetic Reaction Test not achievable with Sting Ray stowage configuration (same with KS32).
  - Fragment Impact with high velocity (2530m/s) a concern on bare charge material.
- MBDA Internal Tests
  - Section level bullet impact test to STANAG 4241
  - Section level fuel fire test to STANAG 4240
  - Demonstration of mitigation measures at System level including venting

Confidence Tests

- EMTAP Tests + QinetiQ Vulnerability Assessment
  - Sympathetic Reaction Test not achievable with Sting Ray stowage configuration (same with KS32).
  - Fragment Impact with high velocity (2530m/s) a concern on bare charge material.
- MBDA Internal Tests
  - Section level bullet impact test to STANAG 4241
  - Section level fuel fire test to STANAG 4240
  - Demonstration of mitigation measures at System level including venting
- Torpedo level venting
  - Conduct of a pressure burst test on the Torpedo body to understand the failure mechanism.
    - Modelling conducted to show that structural failure would occur well below the DDT.
    - Concern that parts may travel >15m leading to a Type IV reaction.

Pressure Burst Test

- Representative test vehicle with dummy warhead section & power supply sections
- Tied down on Integration Trolley - nose/tail cradles to constrain movement
- Surrounded by cardboard boxes filled with instapack
- Webbing transport strap around vehicle length
- Orientated such that joint covers, S&A lanyard, test access etc. would impact instapack boxes.
- Protected area used for pressure vessel testing.

- Pressure gauges used to measure any overpressure at distance

Pressure Burst Test

Pressure Burst Test

Pressure Burst Test

Pressure Burst Test

Facility / Test Vehicle Damage

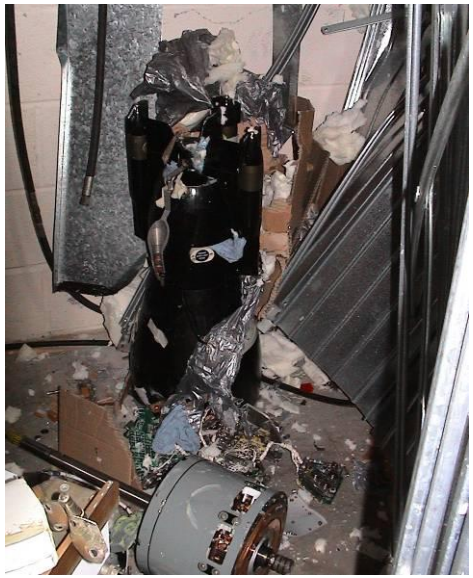

No access
without

Sting Ray Joint System

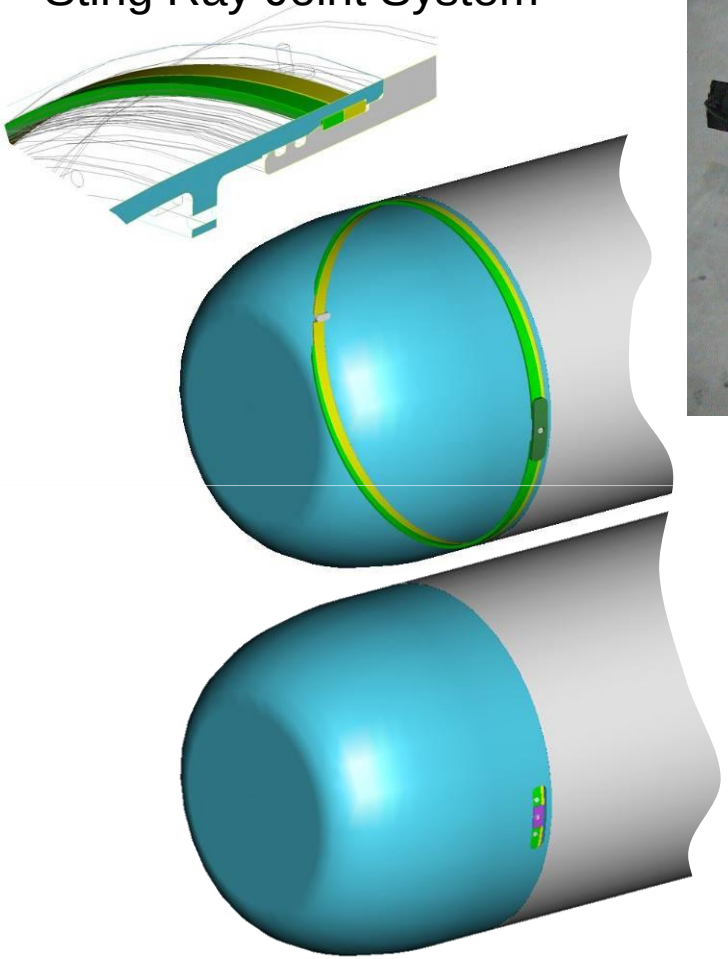

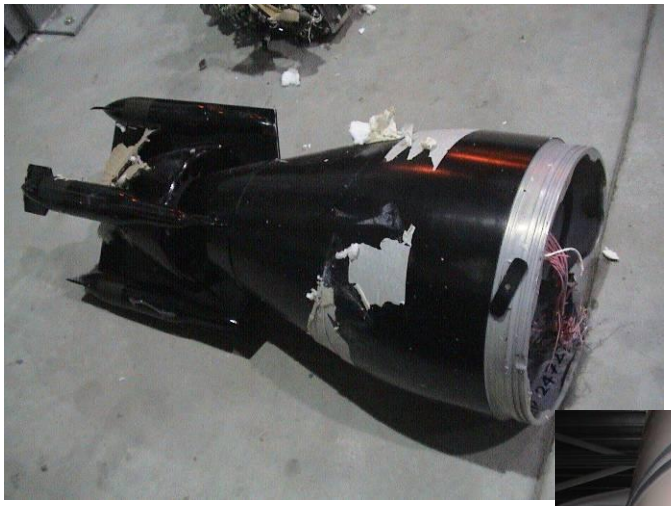

Joint failure at tail / power supply section interface

Slow Heating Test – STANAG 4382

Video
8 frames/s

Purpose built electric circulation oven

- 2 x regulated 1.5kW heaters
- 2 x fixed 300w heaters
- internal & external illumination
- 6 x K-type thermocouples

Thermoglass observation window

Blast Gauges (5m, 10m, 15m)

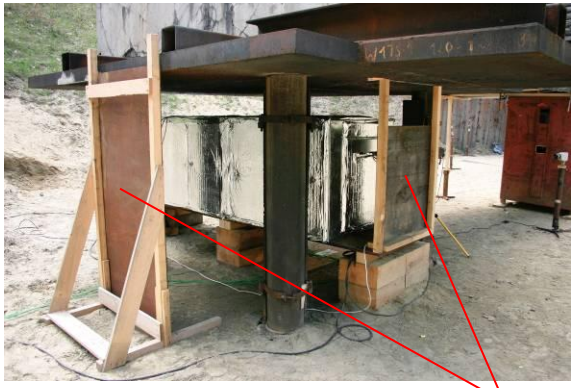

Test Vehicle on support

Witness Plates

Slow Heating Test – STANAG 4382

- Joint failure (as predicted) at nose / warhead interface.
- Shear bolts operated on rear cover plate.
- KS33 ignited by heater cable short
- **Type V reaction**

Fragment Impact Test – STANAG 4496

High Speed Video (550 f/s)

Gun

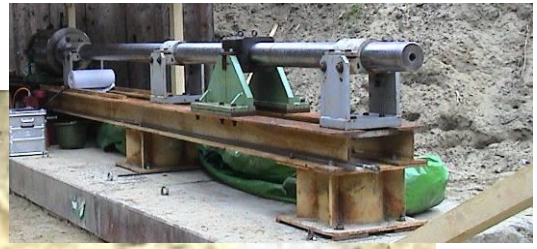

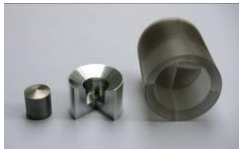

Stripper Plate & Gun protection plate

Anti-shrapnel structure

Steel Witness Plate

Test Sample

Blast Gauges
3-off in view (5, 8 & 10m) + further three on other side of structure + one next to gun (15m)

Mirror (for high speed camera)

Timing foils

Test Set-up

Fragment Impact Test – STANAG 4496

Fragment Impact Test – STANAG 4496

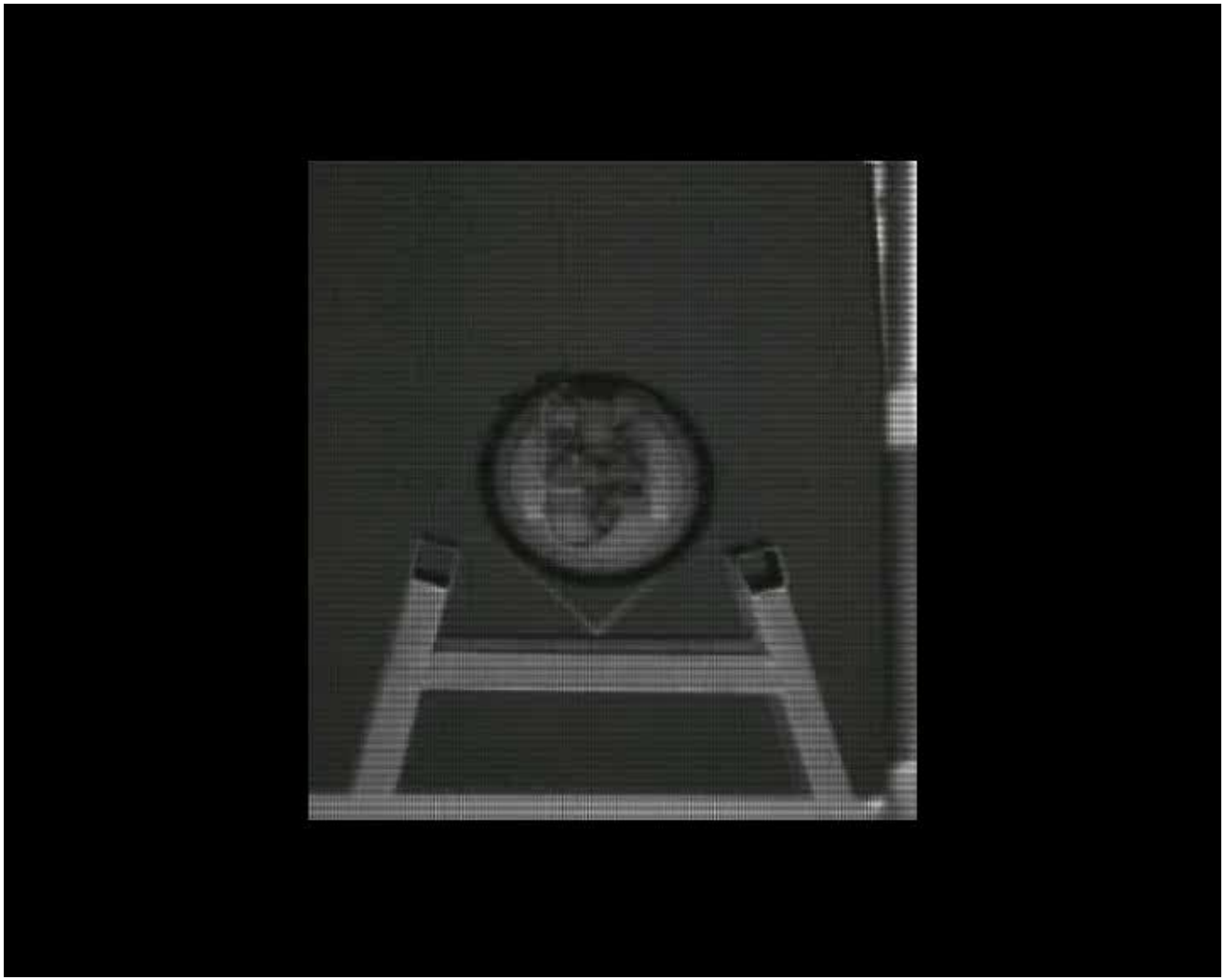

Fragment Impact Test – STANAG 4496

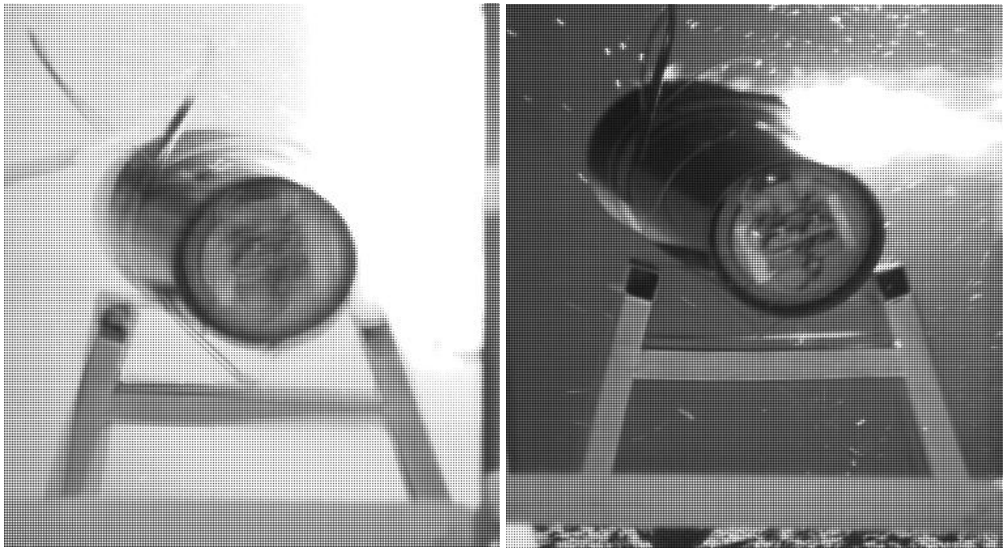

Fragment Impact

Post-test

- Fragment Velocity = 2489m/s
- Unburned KS33 remained within 8.6m
- Casing fragments remained within 2.6m
- no discernable blast overpressure recorded.
- **Type V Reaction**

Fast Heating Test – STANAG 4240

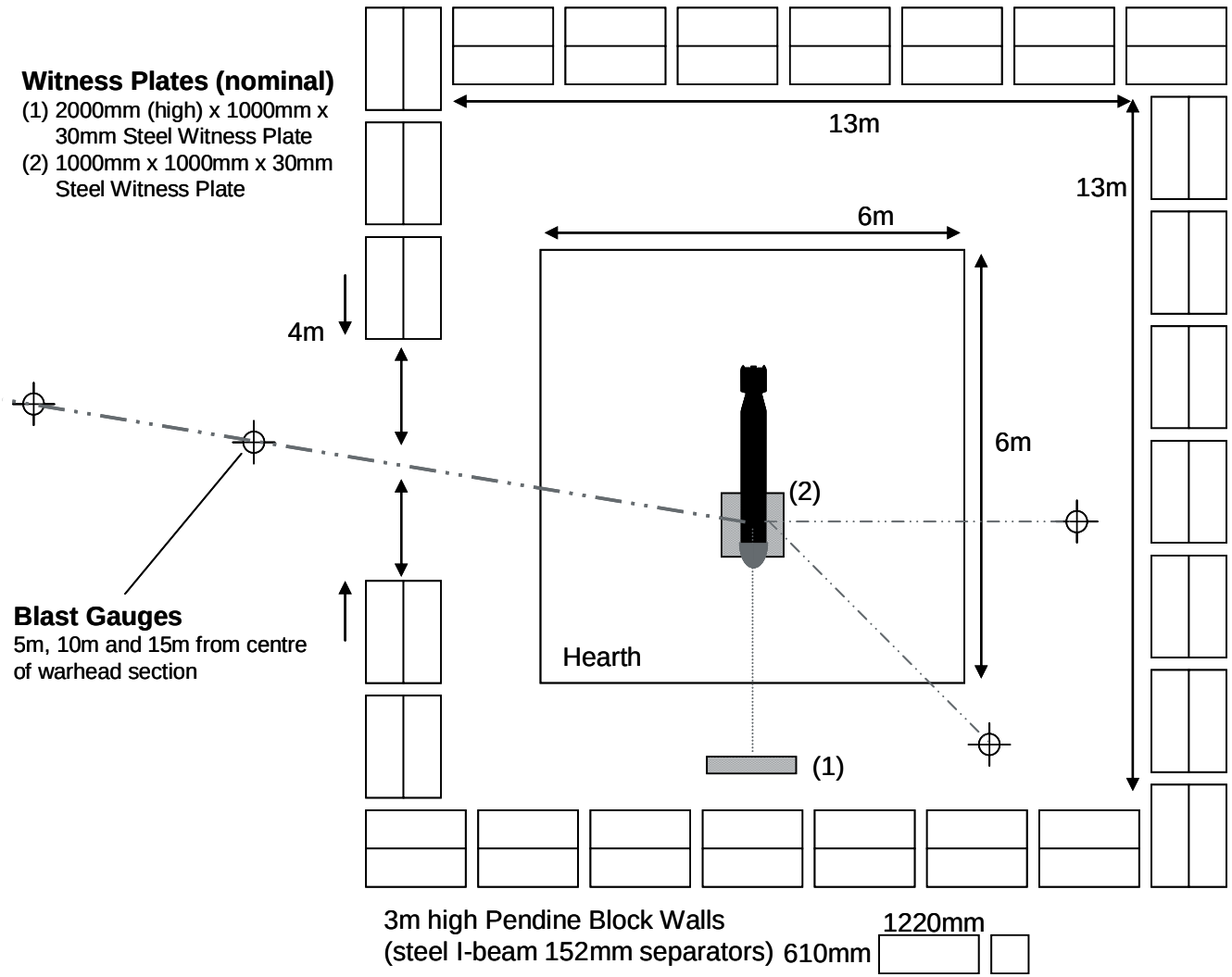

Fast Heating Test – STANAG 4240

Fast Heating Test – STANAG 4240

- 2 Torpedo level tests conducted with dummy battery section.
- Benign reactions – no pressure burst.
- Parts remained within test stand
- no blast overpressure recorded.
- **Type V Reaction**

Performance

- Potential shaped-charge performance loss due to use of less energetic IM main charge material.
- Non-ideal stand-off distance as Sting Ray was originally configured for a blast warhead.
- **Stage 1** – Performance of IM charge optimised through use of precision components, very tight alignment tolerances, and liner / waveshaper configuration for optimum matter stream in terms of lead velocity, particle size and velocity gradient.
- **Stage 2** – Optimised nose section design with central duct to allow jet to develop symmetrically. Through-cable location in nose / warhead interface optimised
- Performance of Mod 1 IM variant exceeds that of Mod 0 non-IM variant

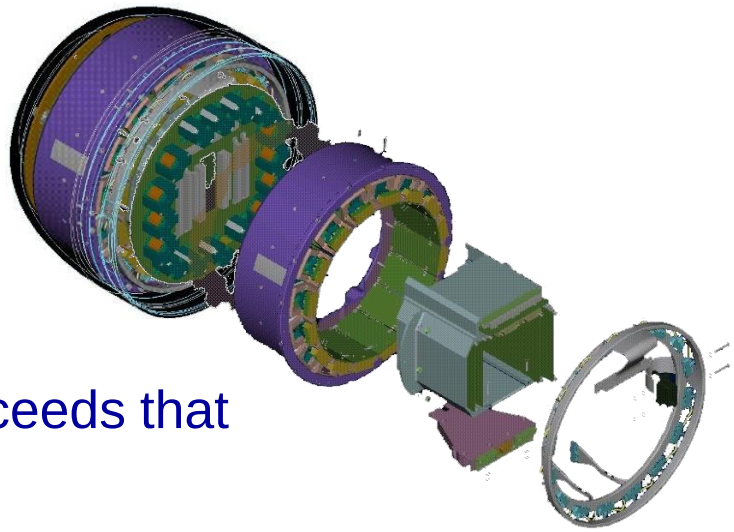

Performance Measurement

- Land-based target – used to indicate likely penetration performance and also for Lot Proofing tests. Approximates double-hulled submarine with acute impact angle.

- Underwater target – used to measure operational performance penetration performance. Tests conducted at QinetiQ tidal range in Weston-super-Mare, UK (13m tidal movement).

Summary

- Legacy Constraints
  - Fixed legacy hardware in terms of hull sections and jointing system with exceptional resistance to external pressure load.
  - Use of less energetic IM materials with performance requirement equivalent to high yield non-IM Mod 0 Warhead + stand-off configured for blast warhead.

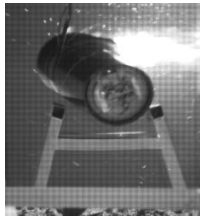

- IM compliance
  - Careful selection of demonstrated IM materials.
  - Design of mitigation measures for venting / impact.
  - Key is understanding how legacy hardware reacts to venting of new warhead.

- Performance
  - Optimise nose design to allow shaped-charge to develop and provide symmetrical interface in critical area of jet formation.
  - Configure shaped-charge components to provide optimum matter stream in terms of lead velocity, particle size, and velocity gradient along length – backed up by scaled and full calibre firings during development.

Any Questions?

With thanks to the following :-
DE&S Abbey Wood (MoD UK) - Sting Ray IMW Project Manager, Brian Lincoln (e-mail : deswpnstth-2d@mod.co.uk)
MBDA Missile Systems, Schrobenhausen, Germany – Sting Ray Project Manager, Josef Kretzmann (e-mail : josef.kretzmann@mbda-systems.de)
e2v technologies, Lincoln, UK – Sting Ray Project Manager, Brion Weller (e-mail : brion.weller@e2v.com)
QinetiQ, Sevenoaks, UK – Graham Maynard (e-mail : glmaynard@qinetiq.com)