U.S. ARMY ARMAMENT RESEARCH, DEVELOPMENT, & ENGINEERING CENTER (ARDEC)

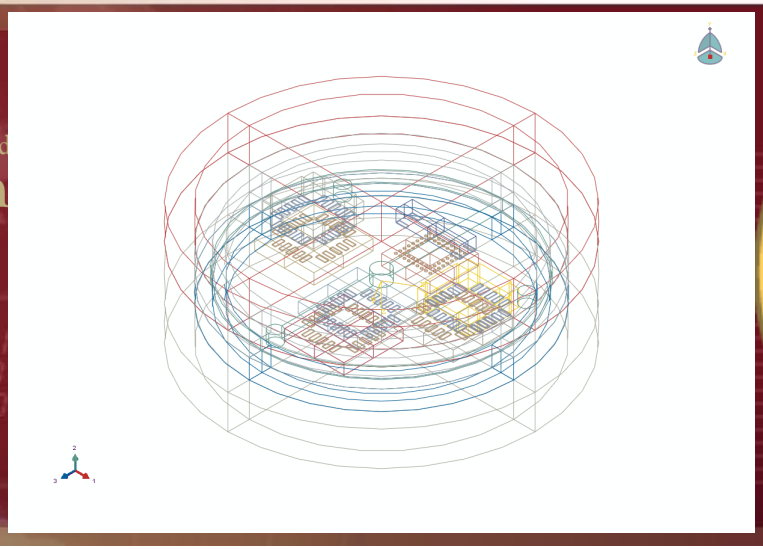

TECHNOLOGY DRIVEN. WARFIGHTER FOCUSED.

Characterization of a Potting Material for Gun Launch

Dr. Aisha Haynes, USA & Dr. Jennifer A. Cordes (Speaker)

26th International Symposium on BALLISTICS, Miami, FL, September 12-16 2011

Talk: 12062, Session: Launch Dynamics

Picatinny Arsenal, Dover NJ, USA, jennifer.cordes@us.army.mil; 973-724-6147

Outline

- Introduction
- Experimental Test Results, Example Potting
- Method: Modeling and Simulation Of Electronics With Potting
- Results: Simple Study
- Conclusions

TECHNOLOGY DRIVEN. WARFIGHTER FOCUSED.

Introduction: Goals

- Goals – compare displacements and stresses for a simple electronics module potted and unpotted under gun launch.
- Finite Element Models:
  - Board with chips, supported by potting ring
  - Board with chips, supported by full potting
- Temperatures: ambient, (-40C, 60C)
- Material Model: Linear Elastic, (Hyper-elastic), visco-elastic
- Load – 'OBR2' PMP+5% accelerations from Excalibur (actual recorded accelerations)

Potting Electronic Components

Pros

- Good dynamic support of components
- Damping of shock and vibratory loads on electronics during gun launch and vibration

Cons

- Modeling and simulation with potting is more difficult than without potting
- Changes in property over temperature range
- Manufacture/process control is more difficult
- Residual stresses from curing
- Thermal stresses result from mismatch of coefficient of thermal expansion

Introduction: Statement of Problem, Model 1

Goal: Determine the impact of potting on a simple electronics system under gun launch.

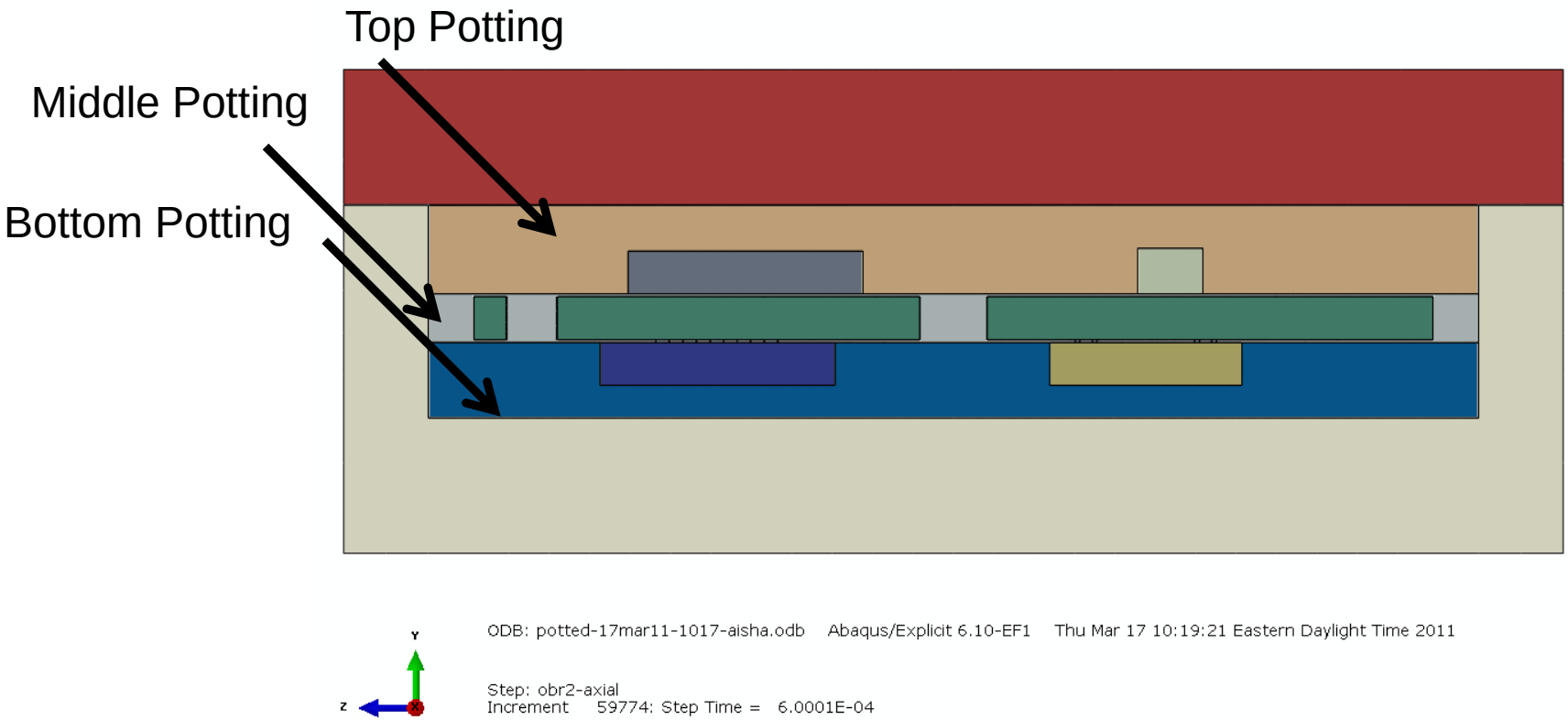

TECHNOLOGY DRIVEN. WARFIGHTER FOCUSED.

Statement of Problem, Model 2

Note: this is a representative electronics package.
It is not an actual electronics package

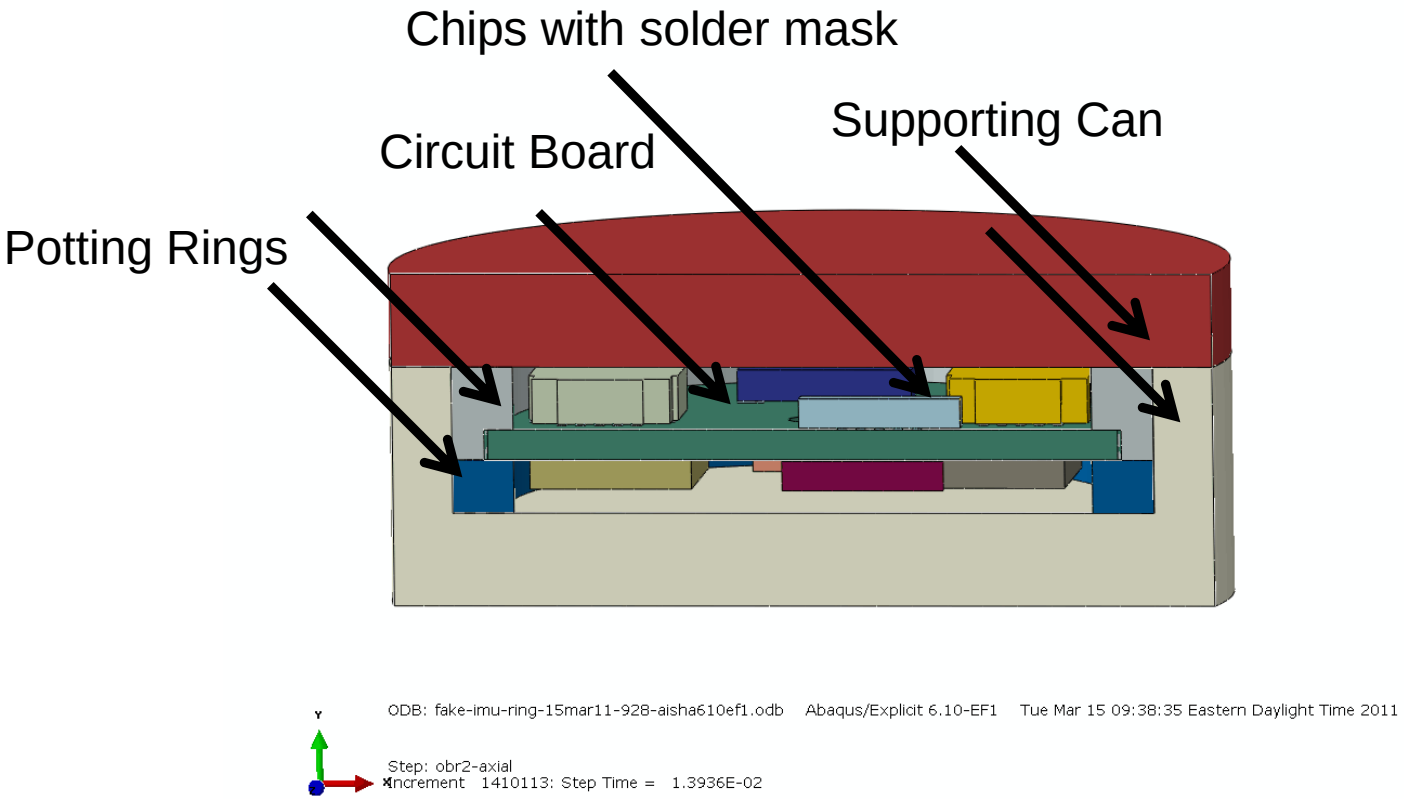

TECHNOLOGY DRIVEN. WARFIGHTER FOCUSED.

Introduction: Statement of Problem, Loads

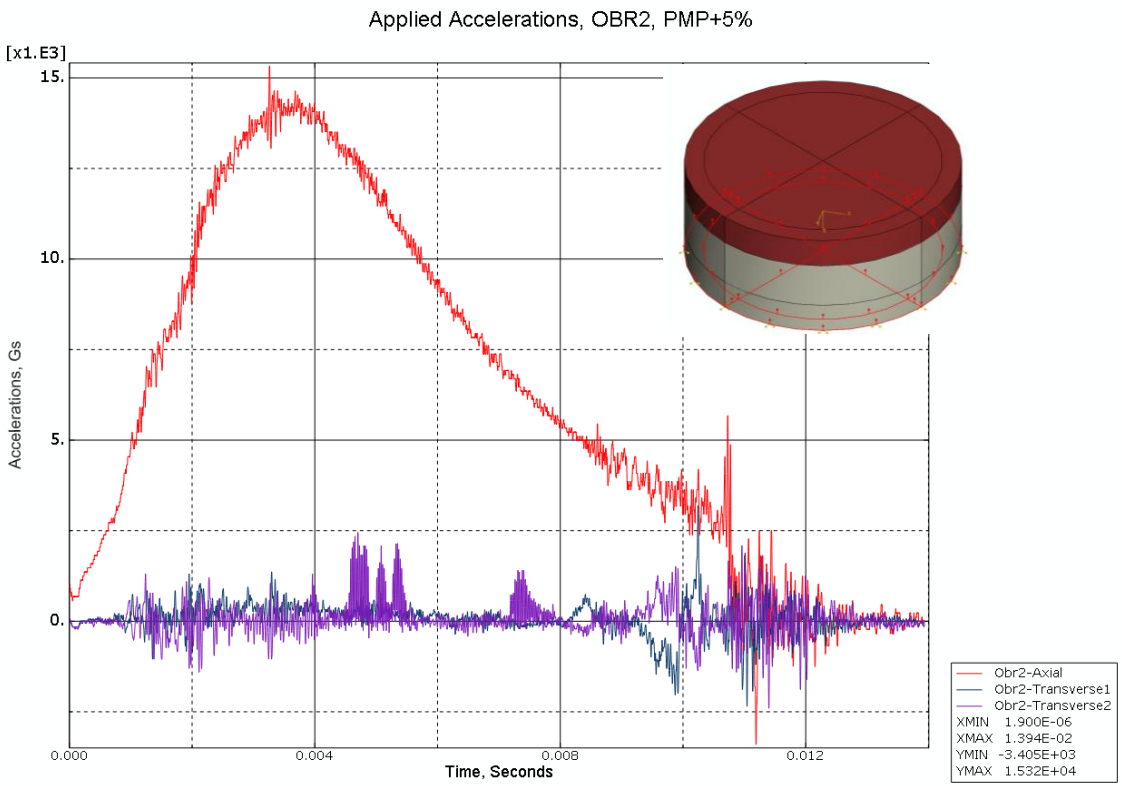

- Dynamic Loads:
- Applied through the projectile and mating structure
- Loads are 3-dimensional
- Loads are highly dynamic
- ==========
- Thermal Loads from Storage
- Repeated temperature cycles

TECHNOLOGY DRIVEN. WARFIGHTER FOCUSED.

Experimental Results: What tests do you need?

For modeling and Simulation, we need accurate material properties and material models at different temperatures

- Dynamic Mechanical Analysis (for example: ASTM standard 7028)
- Poisson's ratio & density
- Tensile/compressive stress strain data (to failure) for modeling hyper-elasticity
  - Limitation: Plasticity/Damage cannot be modeled with visco-elastic material definition in ABAQUS
-
- **High strain rate/high frequency data (optional)
- Coefficient of Thermal Expansion
- Specific Heat
-
- Thermal Conductivity

TECHNOLOGY DRIVEN. WARFIGHTER FOCUSED.

Material Model Potting: Assumptions

Potting Material: filled polyurethane system

From the DMA data, the glass transition temperature is in the range between -10C and 20C depending on the criteria used

Constitutive Material models:

Elastic or Hyper-elastic

Visco-elastic

DMA data was 3-point bend data providing E' and E" values. These were converted to shear modulii, $G=E/2*(1+\mu)$

The calculated shear modulus at 1Hz was assumed to be the long term shear modulus, $G\infty$

The material is incompressible. Poisson's ratio is around 0.5. For dynamic/explicit analysis, ABAQUS recommends 0.475 .

The sample was subjected to multiple frequency oscillations under varying temperatures from -101 C to 71 C (-150 F to 160 F). 11 Frequencies.

Malcolm Baldrige National Quality Award 2007 Award Recipient

TECHNOLOGY DRIVEN. WARFIGHTER FOCUSED.

Experimental: Storage and Loss Modulus (dynamic tests)

Dynamic Mechanical Analysis (DMA)

- Provides modulus data
- Can provide damping data
- Can be used to model material visco-elasticity

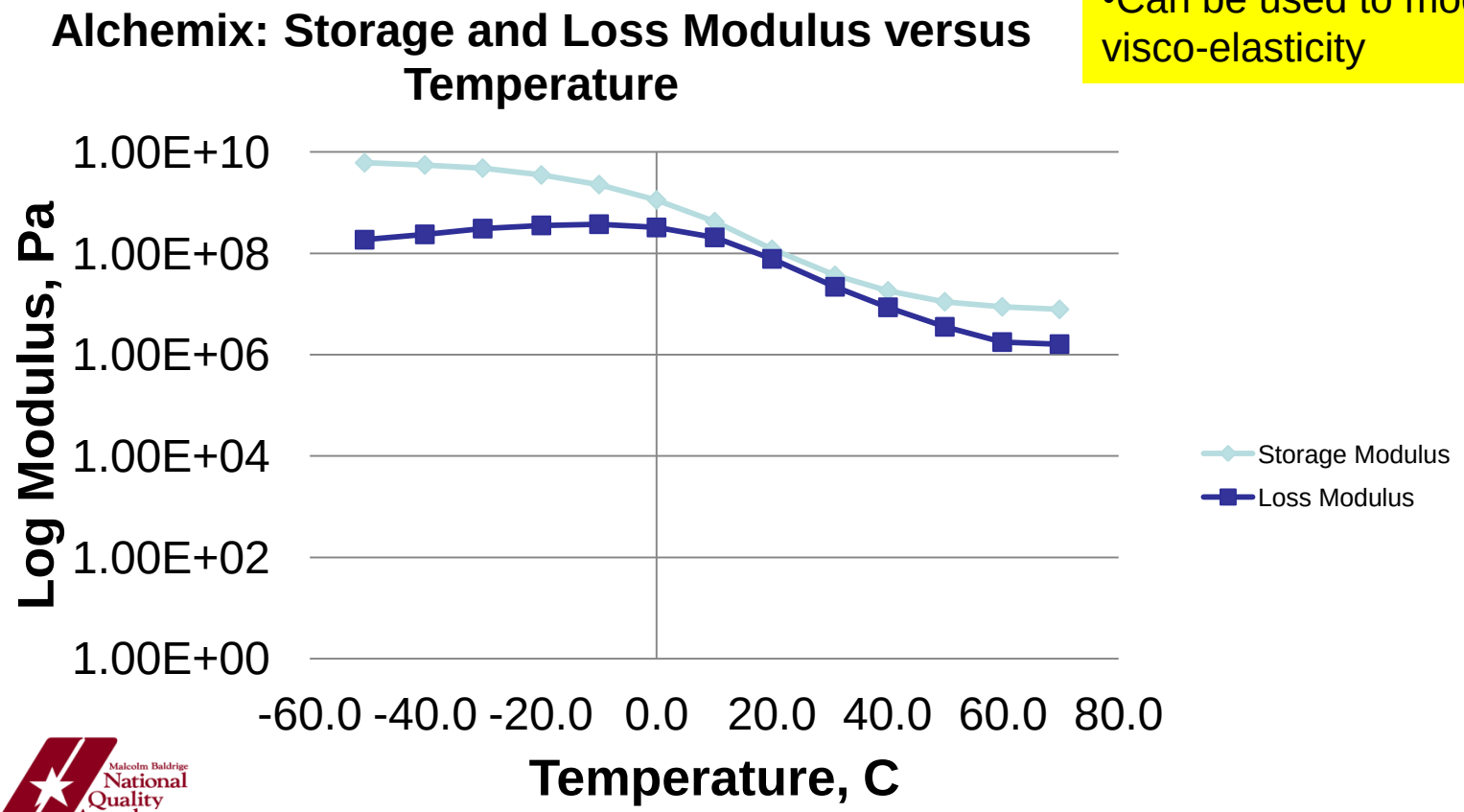

TECHNOLOGY DRIVEN. WARFIGHTER FOCUSED.

Table 2. Material Assumptions

Materials

Parts	Material	Material	Young's Modulus	Poisson's	Mass Density
		Type	MPa	Ratio	kg-m3
Ceramic Chips	CERAMIC_X7R	Elastic	104954	0.3	5.92E+03
can-1	Aluminum	Elastic	69049	0.3	2.72E+03
board-gyro	FR4	Elastic	25548	0.15	1.93E+03
solder	solder-sn60-pb40	Elastic/plastic	30044	0.4	8.61E+03
potting	ALCHEMIX_DMA -	Visco-Elastic	120.	0.49	1.60E+03
Plastic Connector	Plastic	Elastic	36043	0.3	5.12E+03

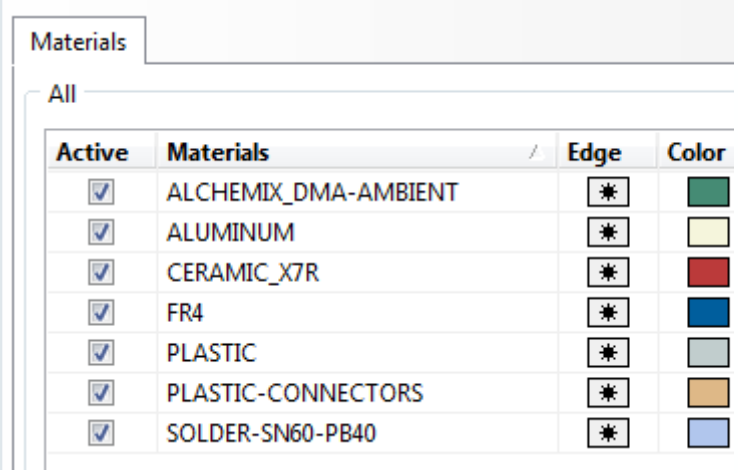

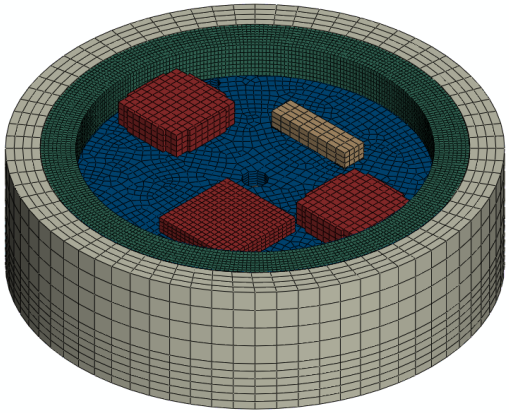

Material Model: Potting Assumptions

Edit Material

Name: ALCHEMIX_DMA-AMBIENT-elastic

Description: The elastic data is based on DMA data at a frequency of 1 Hz. The viscoelasticty data was calibrated using frequency dependant data from DMA

Material Behaviors

- Density
- Elastic
- Expansion
- Specific Heat
- Viscoelastic

General Mechanical Thermal Other

Viscoelastic

Domain: Time

Time: Frequency data

Type: Isotropic Traction

Preload: None Uniaxial Volumetric Uniaxial and Volumetric

Maximum number of terms in the Prony series: 5

Allowable average root-mean-square error: 0.15

Data

	Omega g* real	Omega g* imag	Omega k* real	Omega k* imag	Frequency
1	0.646045002	0	0	0	1.063
2	0.742760186	-0.157511634	0	0	1.585
3	0.860174942	-0.356388368	0	0	2.512
4	0.987531199	-0.585179579	0	0	3.981
5	1.125225442	-0.847954793	0	0	6.31
6	1.267663232	-1.14181982	0	0	10
7	1.416675243	-1.473678814	0	0	15.849
8	1.566002465	-1.841872907	0	0	25.119
9	1.728818779	-2.305288423	0	0	39.811
10	1.896169375	-2.827739758	0	0	63.096
11	2.067542392	-3.419983303	0	0	100

Cancel

Potting: filled polyurethane system, Alchemix

Visco-Elastic model parameters defined using DMA data

- m1, m2 based on estimated long term shear modulus
- Estimated long term shear modulus is determined at lowest frequency for each temperature
- Bulk modulii relationships negligible because material is near incompressible

Ambient conditions analyzed

$$m_1(f) = G_l / G_\infty$$
$$m_2(f) = 1 - G_s / G_\infty$$
$$m_3(f) = K_l / K_\infty$$
$$m_4(f) = 1 - K_s / K_\infty$$

Malcolm Baldrige National Quality Award 2007 Award Recipient

TECHNOLOGY DRIVEN. WARFIGHTER FOCUSED.

Internal Constraints

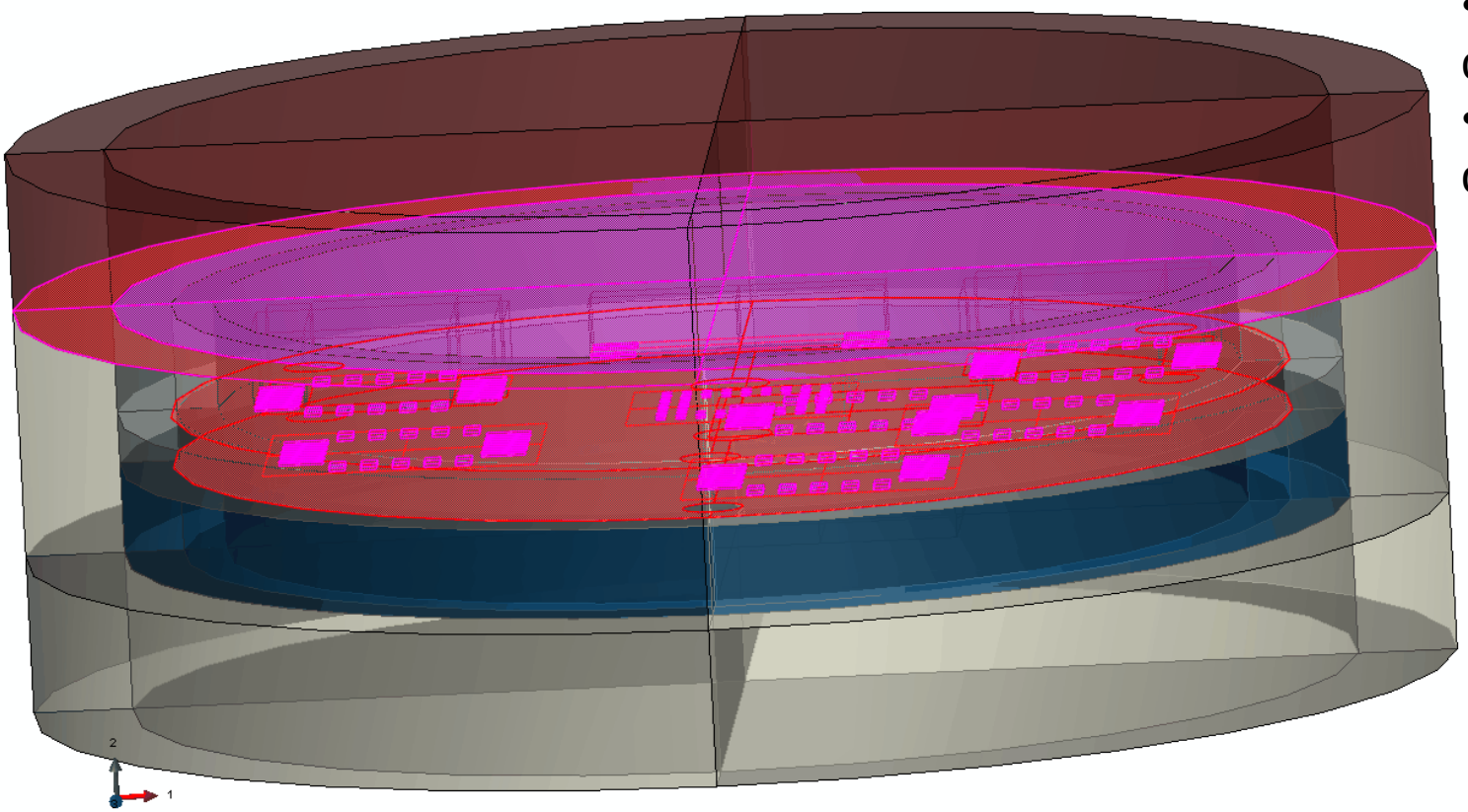

Ties
- Solder to board
- Solder to chips
- Lid to bottom of can

Method – Modeling and Simulation
General method, assumptions, errors

- General Purpose Finite Element Software: ABAQUS Explicit 6.111.
- Analysis: nonlinear geometry, nonlinear materials
- Loads: obr2 measured acceleration data PMP+5, 3-D accelerations
- Elements: 8-node brick elements
- Tied: Potting glued together. Potting not glued to boards, can, or chips.
- Solder is included under chips. Potting does not extend under chips
- Materials: elastic/plastic, (hyper-elastic), visco-elastic
- Materials properties: Tested properties for potting (Dynamic Mechanical Analysis)
- Errors and omissions – room temperature results only, material models are approximate
- Friction: 0.00001, penalty method
- Damping: None other than visco-elastic model for potting
- Initial Conditions: no pre-stress, no initial velocity, ambient temperature
- Location: old files hpcc2 ‘fakeimu’; new corona fakeimu; imu/cae *foraisha*cae; potting-jul11

Results, comparisons

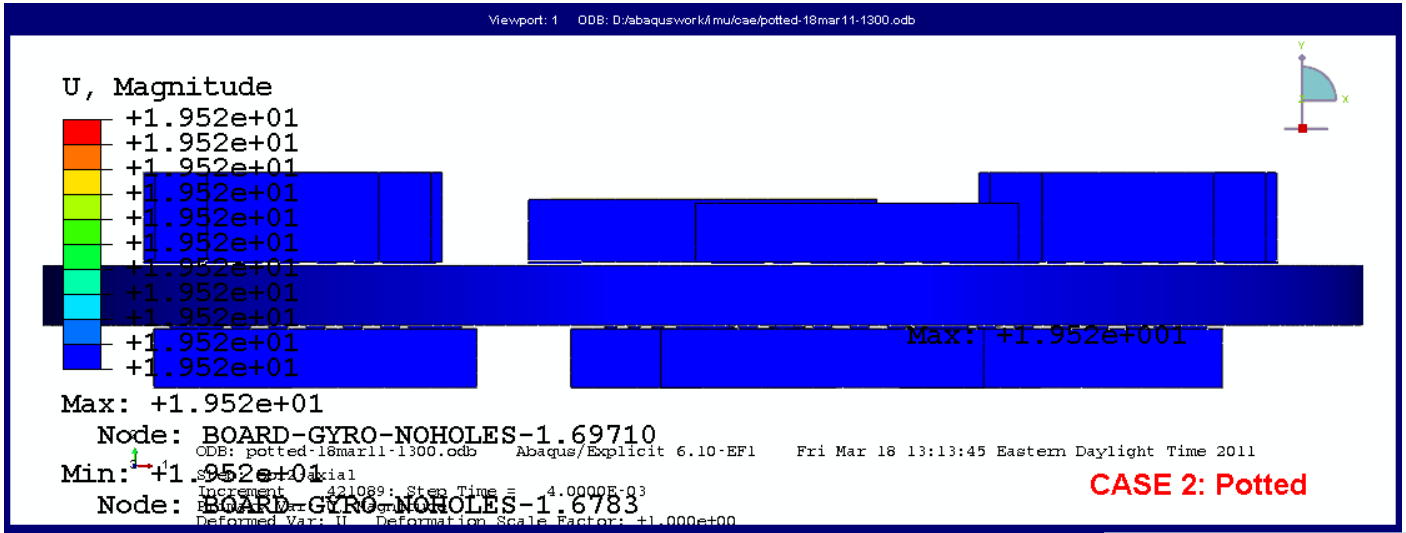

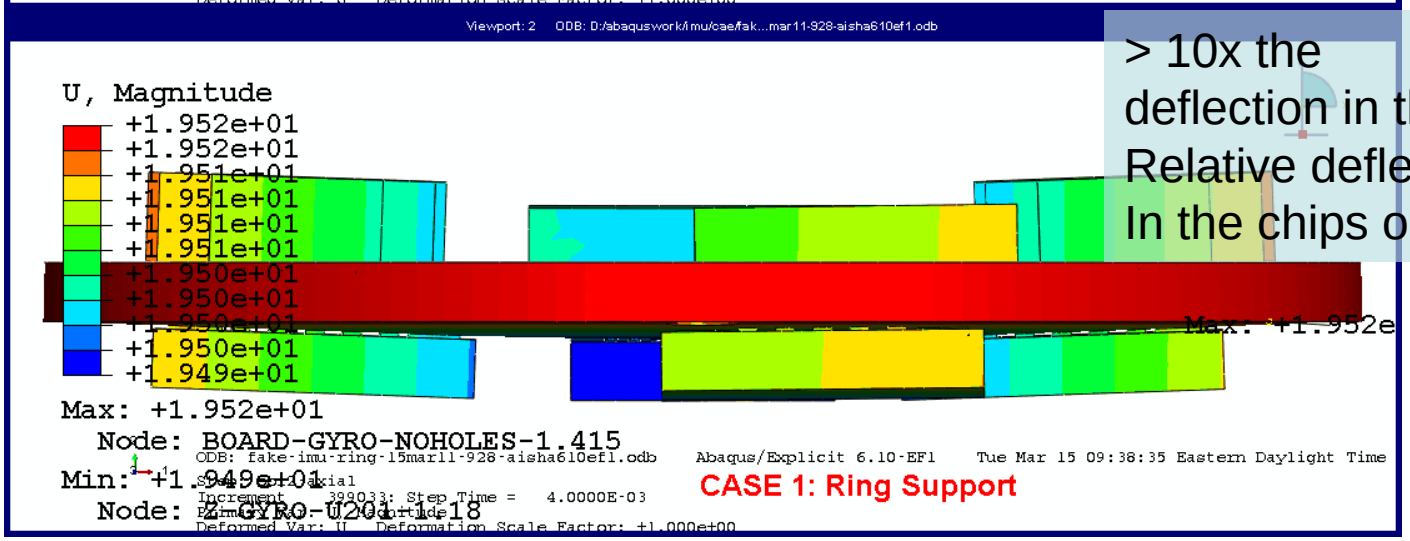

> 10x the deflection in the ringed
Relative deflection
In the chips okay

Malcolm Baldrige National Quality Award 2007 Award Recipient

TECHNOLOGY DRIVEN. WARFIGHTER FOCUSED.

Results, comparisons

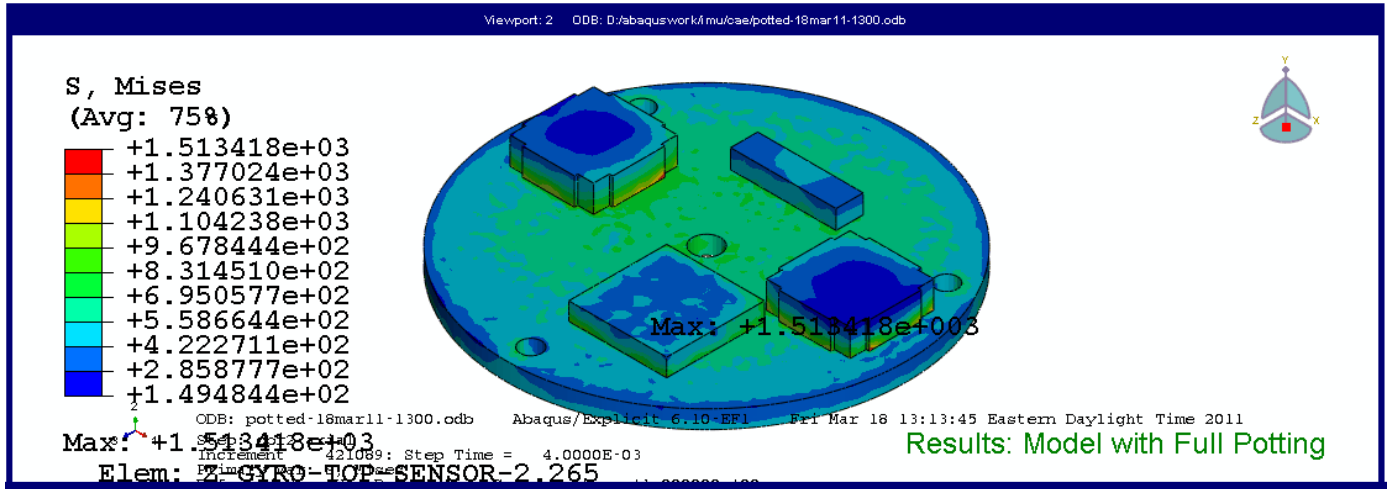

Results: Model with Full Potting

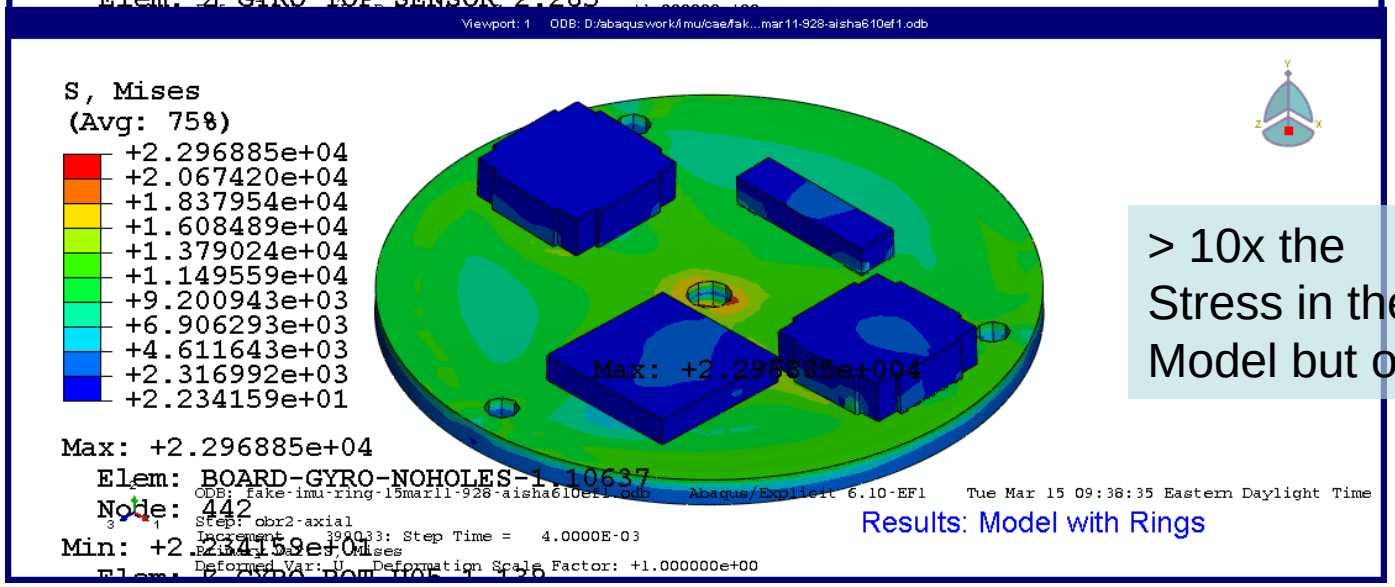

Results: Model with Rings

> 10x the Stress in the ringed Model but okay

Malcolm Baldrige National Quality Award 2007 Award Recipient

TECHNOLOGY DRIVEN. WARFIGHTER FOCUSED.

Results, comparisons

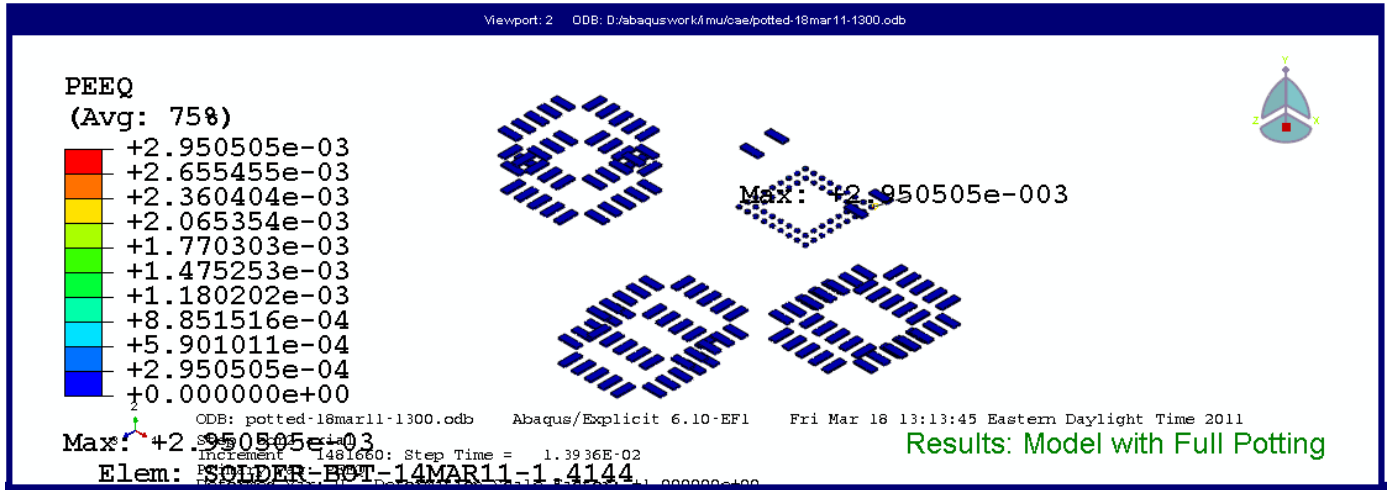

Results: Model with Full Potting

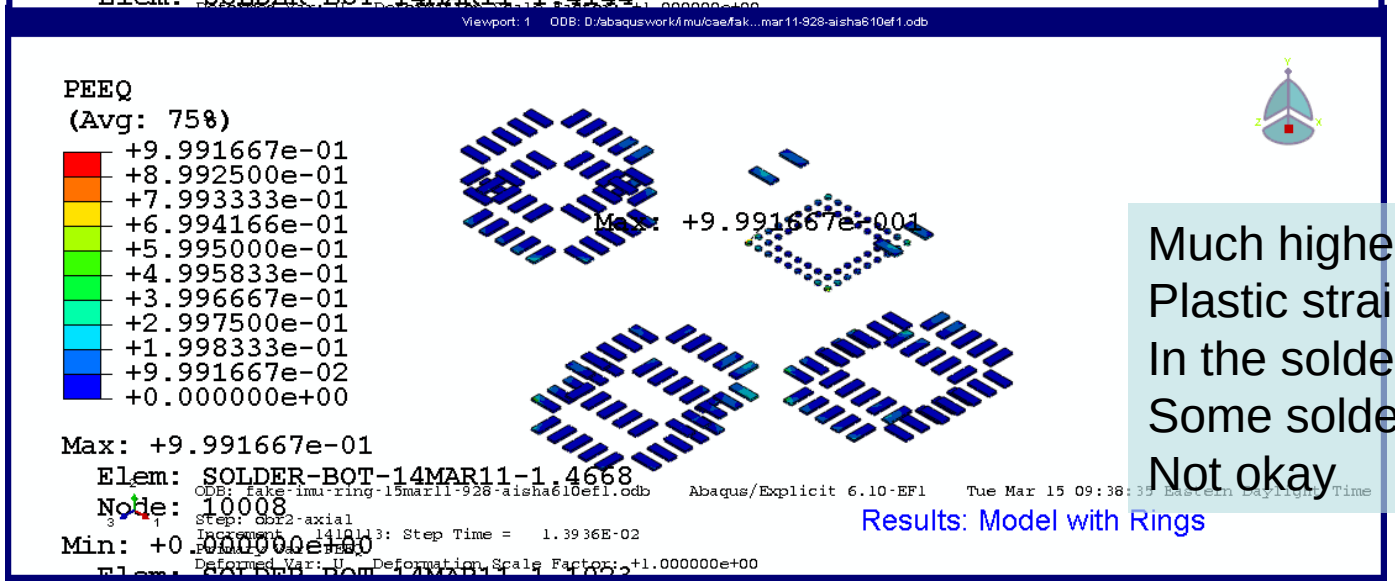

Results: Model with Rings

Much higher
Plastic strains
In the solder;
Some solder pads
Not okay

Malcolm Baldrige National Quality Award 2007 Award Recipient

TECHNOLOGY DRIVEN. WARFIGHTER FOCUSED.

Conclusion

- For the brief case presented:
  - Experimental comments –
    - The glass transition temperature is in operating range
    - The potting does provide some damping of the motion
  - Modeling and Simulation, ambient
    - Relative chip deflection was within 7.6E-5m (3/1000 inch) ringed model
    - Hyper-elastic material model would be better for the ringed model
    - The stresses in the potted electronics result in about 10% of the non-potted stresses
    - Thermal issues not addressed in this study
    - Repeat for temperature extremes

Future/current work

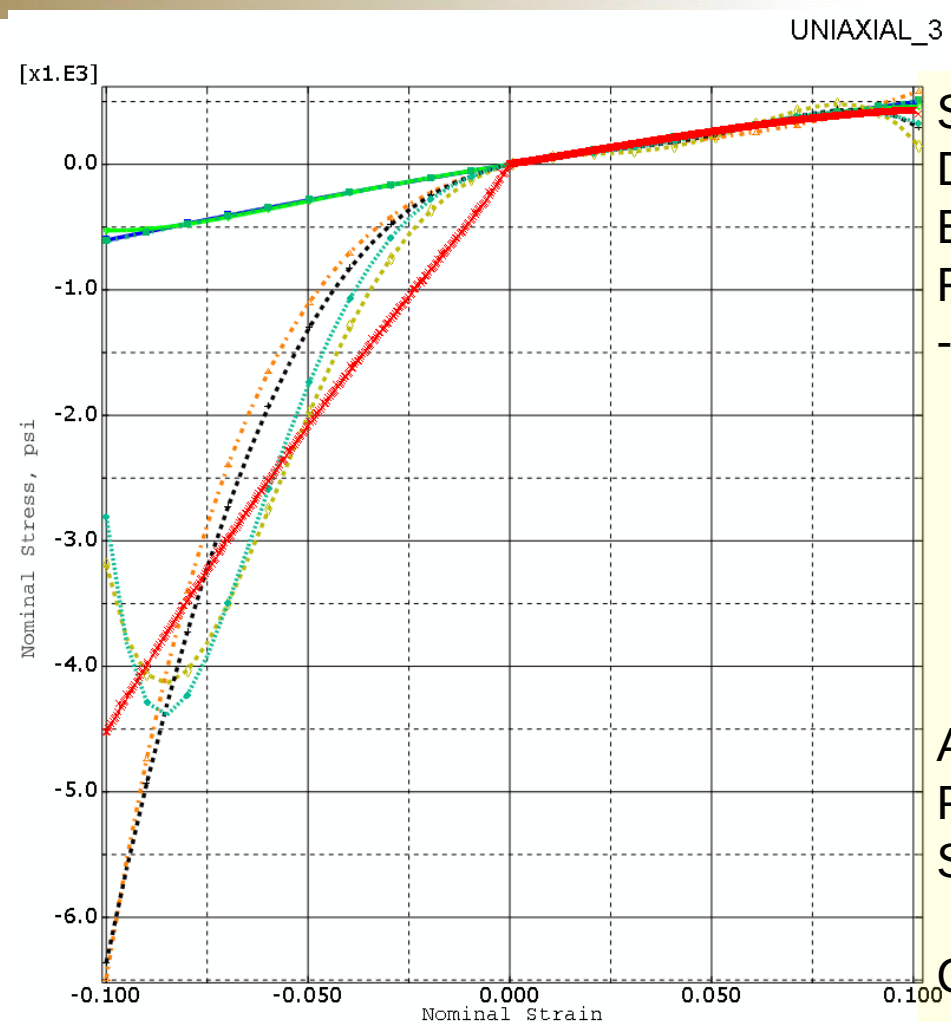

Shown; comparison of stress strain Data using different hyper-elastic models.
Best matches: Ogden N4 larger
Range of stable strain:
-0.038 < strain < .09

ARRUDA_BOYCE UNIAXIAL ALCHEMIX_DMA-AMBIENT-str-str_3
R_POLY_N3 UNIAXIAL ALCHEMIX_DMA-AMBIENT-str-str_3
POLY_N2 UNIAXIAL ALCHEMIX_DMA-AMBIENT-str-str_3
OGDEN_N3 UNIAXIAL ALCHEMIX_DMA-AMBIENT-str-str_3
OGDEN_N4 UNIAXIAL ALCHEMIX_DMA-AMBIENT-str-str_3
OGDEN_N5 UNIAXIAL ALCHEMIX_DMA-AMBIENT-str-str_3
VAN_DER_WAALS UNIAXIAL ALCHEMIX_DMA-AMBIENT-str-str_3
Test Data UNIAXIAL ALCHEMIX_DMA-AMBIENT-str-str_3
XMIN -1.000E-01
XMAX 1.013E-01
YMIN -6.486E+03
YMAX 5.833E+02

Aruda Boyce unconditionally stable
Poly N3 similar to Aruda Boyce,
Slightly better in tension

Comparison of temperature extremes

TECHNOLOGY DRIVEN. WARFIGHTER FOCUSED.

Questions?

- Questions
- Thank you

TECHNOLOGY DRIVEN. WARFIGHTER FOCUSED.