The use of electric power in active armour applications

IBS 2005

TNO | Knowledge for business

Martin.Vandevoorde@tno.nl
Ricolt.Boeschoten@tno.nl
Jos.Vanderburgt@tno.nl

Presentation Overview

- **Vehicle survivability**

- Countermeasure with pulsed power supply and directional control
- Sensor development

DAS

- Conclusion

Survivability Onion

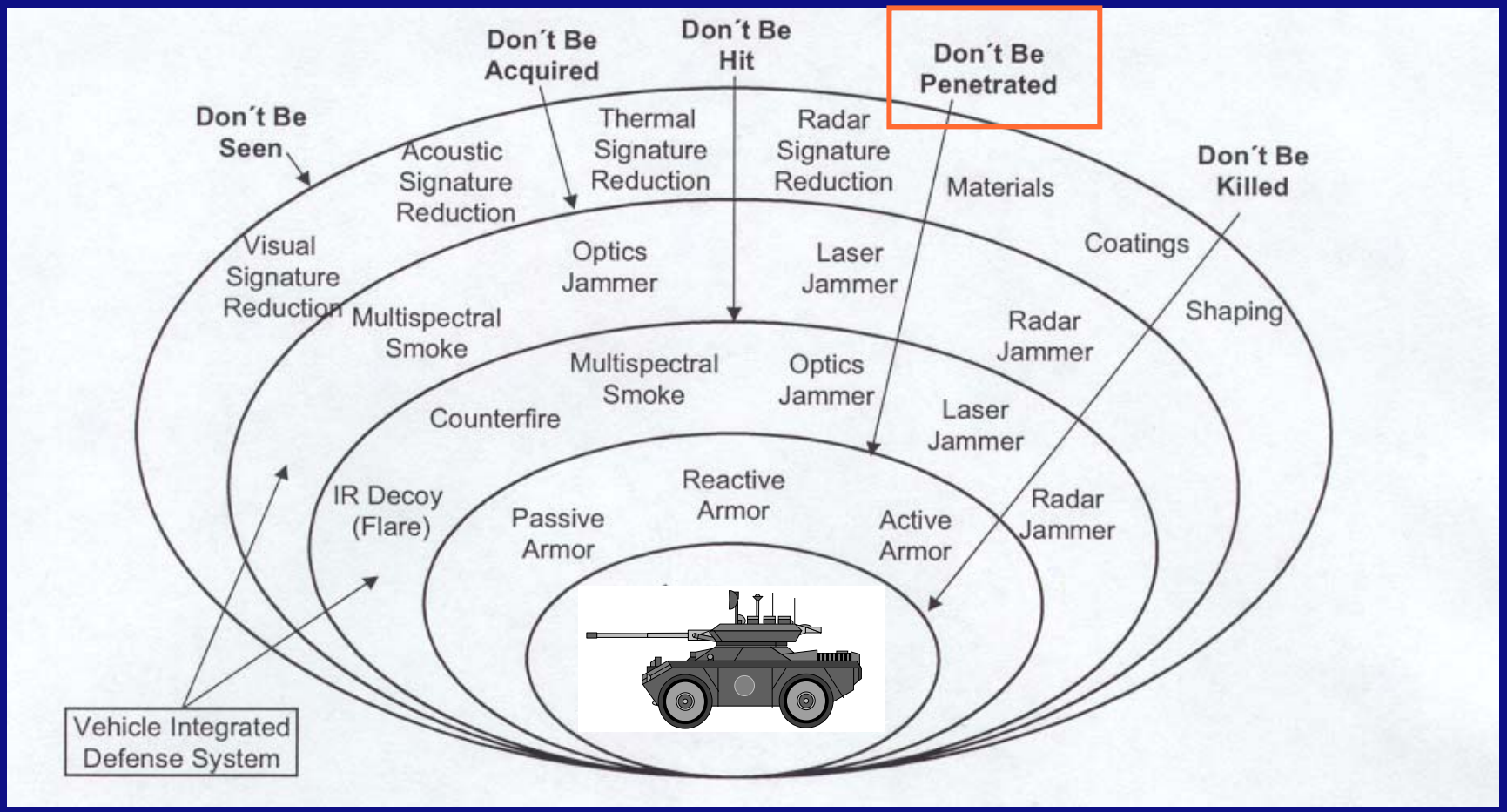

Presentation Overview

- Vehicle survivability
- **Countermeasure with pulsed power supply and directional control**
- Sensor development
- Conclusion

DAS

Advantages of EM launched plates

- On/Off switching capability
- No energetic material on the outside of the vehicle
- Directional launching
- Multi-hit capability
- Possibly effective against CE (shaped charge) and KE

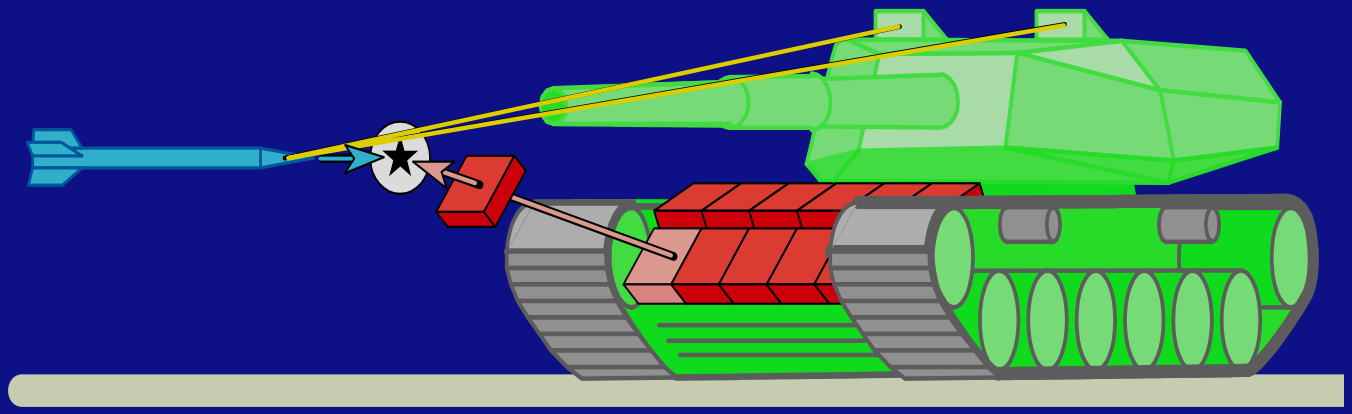

EM launched plate vs Shaped charge (1-D)

EM launched plate (3-D)

EM launched plate (2-D)

Plate velocity: 150-200 m/s
Plate mass: 0.5 kg

EM launched plates vs KE: static experiments

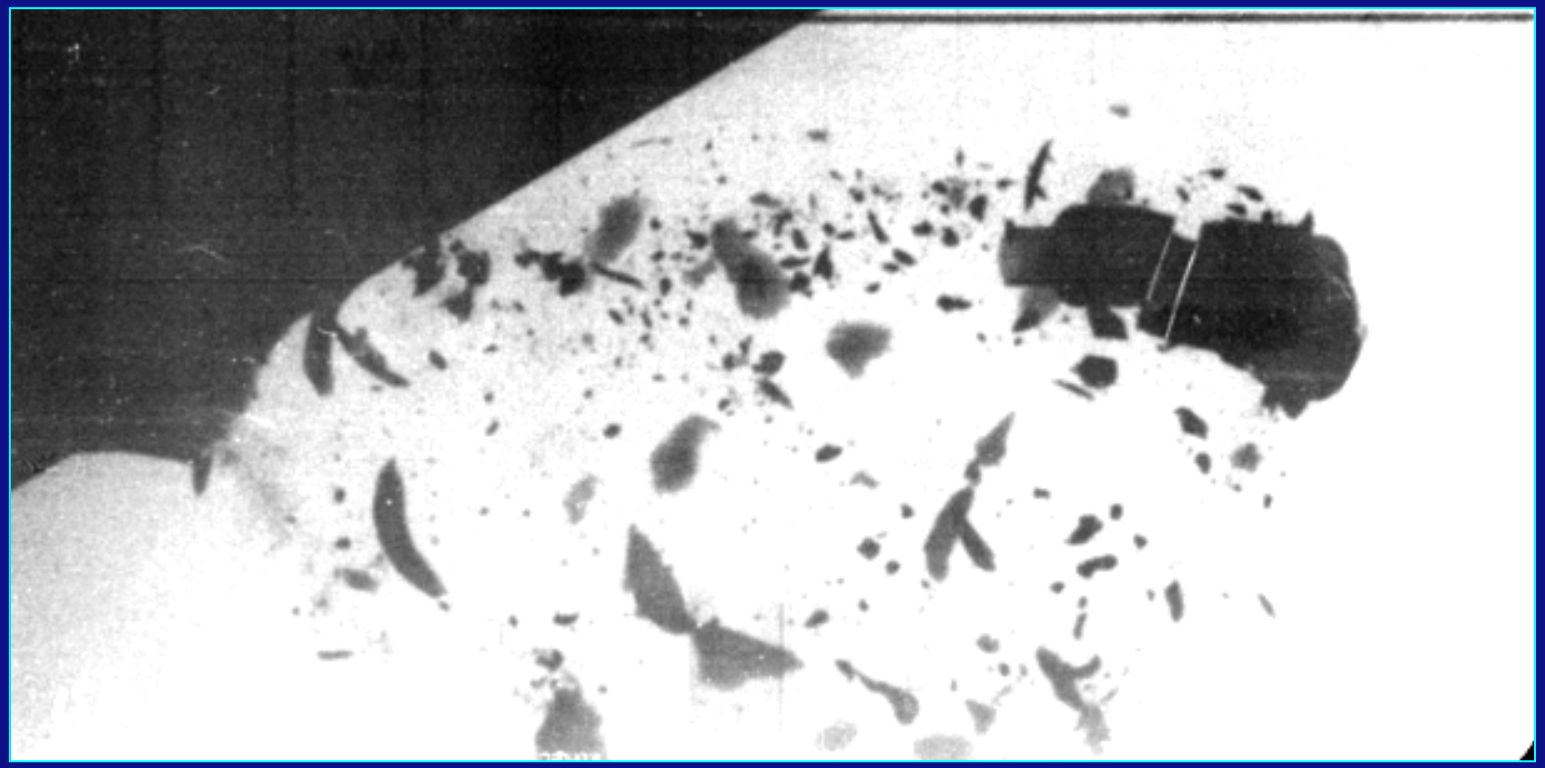

Effectiveness against 30*173 mm APFSDS

EM launched plates vs KE: numerical simulations

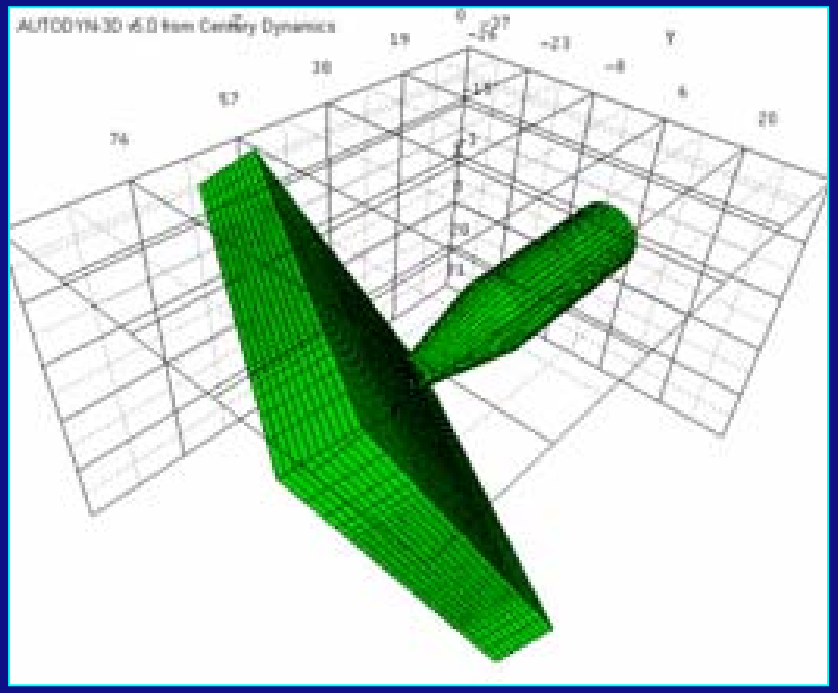

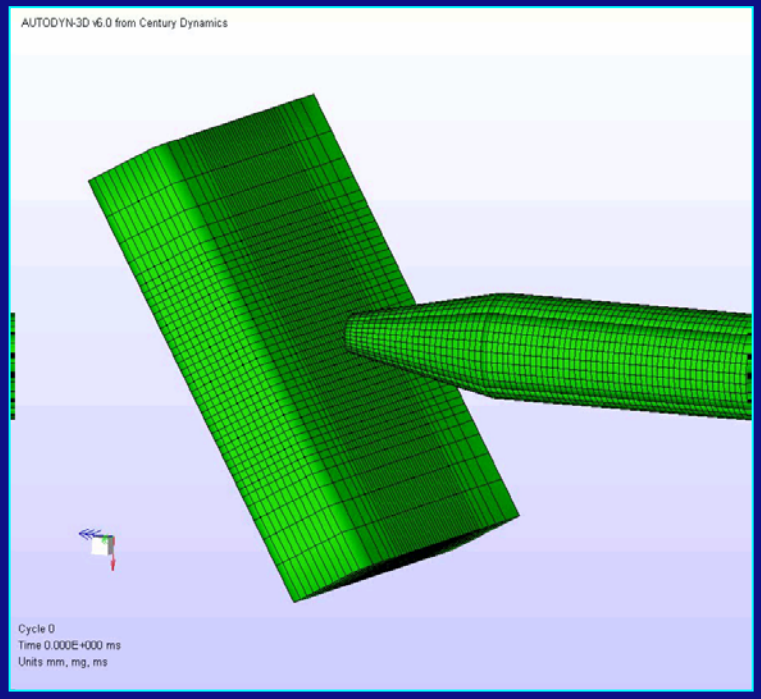

EM launched plates vs KE: dynamic experiments

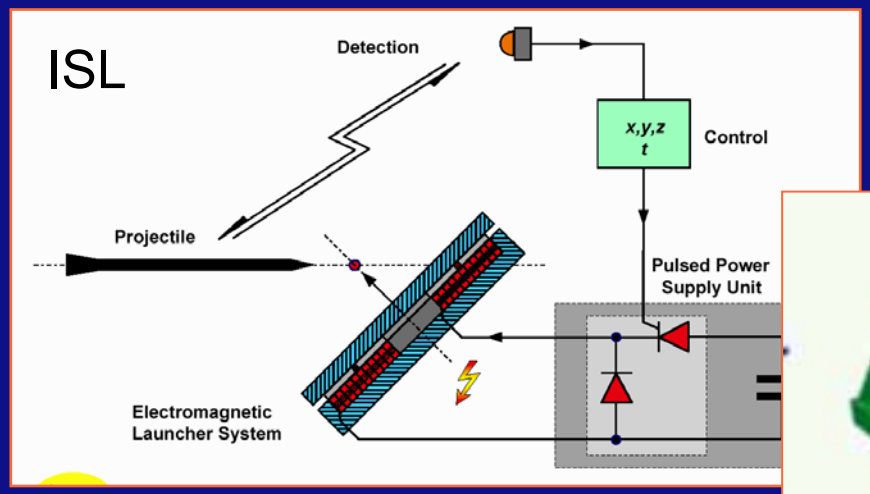

Launched plates

Plate velocity: 50 m/s
Plate mass: 3.0 kg

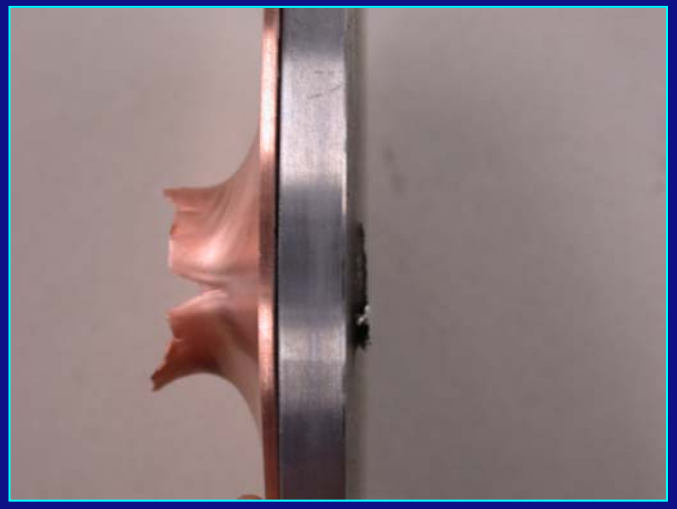

X-ray and camera images

Reduction of DOP:
> 60%

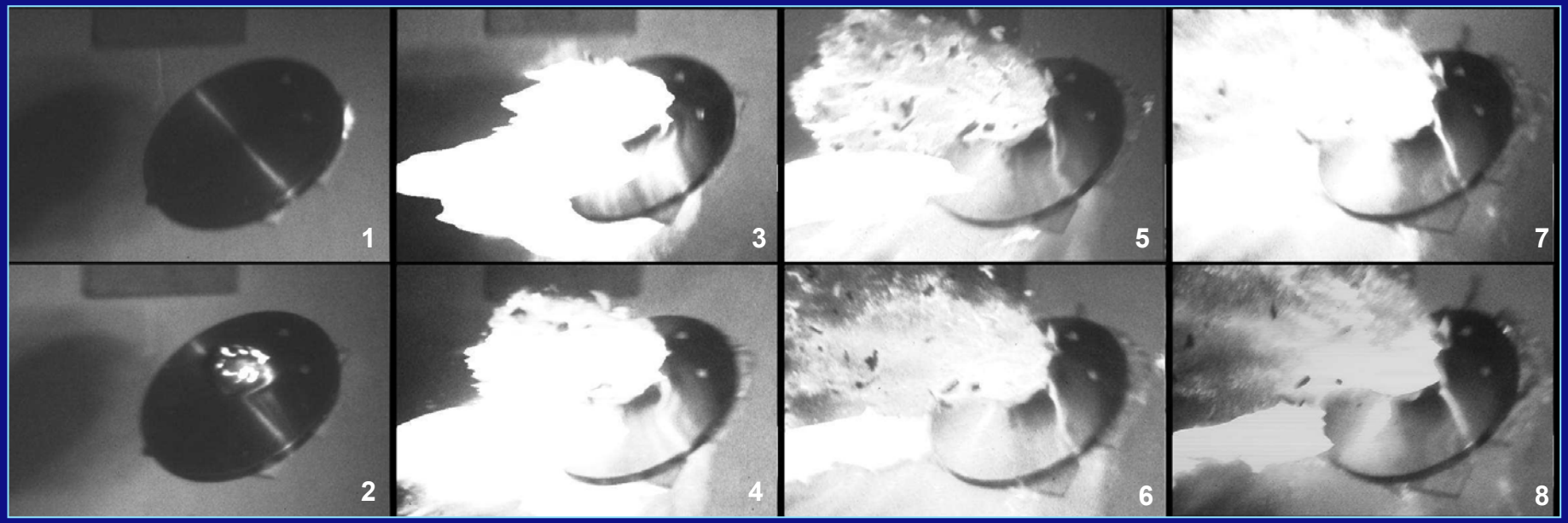

Presentation Overview

- Vehicle survivability
- Countermeasure with pulsed power supply and directional control
- Sensor development

DAS

- **Conclusion**

Conclusion

- Countermeasure steering
  - 3-D possible
- Countermeasure effectiveness
  - Initiates premature detonation of shaped charge
  - Break up or erosion of KE: Decreasing DOP
- Promising sensor design
  - Accuracy of 3D positioning and timing is a real challenge

Presentation Overview

- Vehicle survivability
- Countermeasure with pulsed power supply and directional control
- **Sensor development**
  - Sensor design
  - RPG-7 signatures from TNO experiments
- Conclusion

DAS

RPG-7 firing in Czech Republic

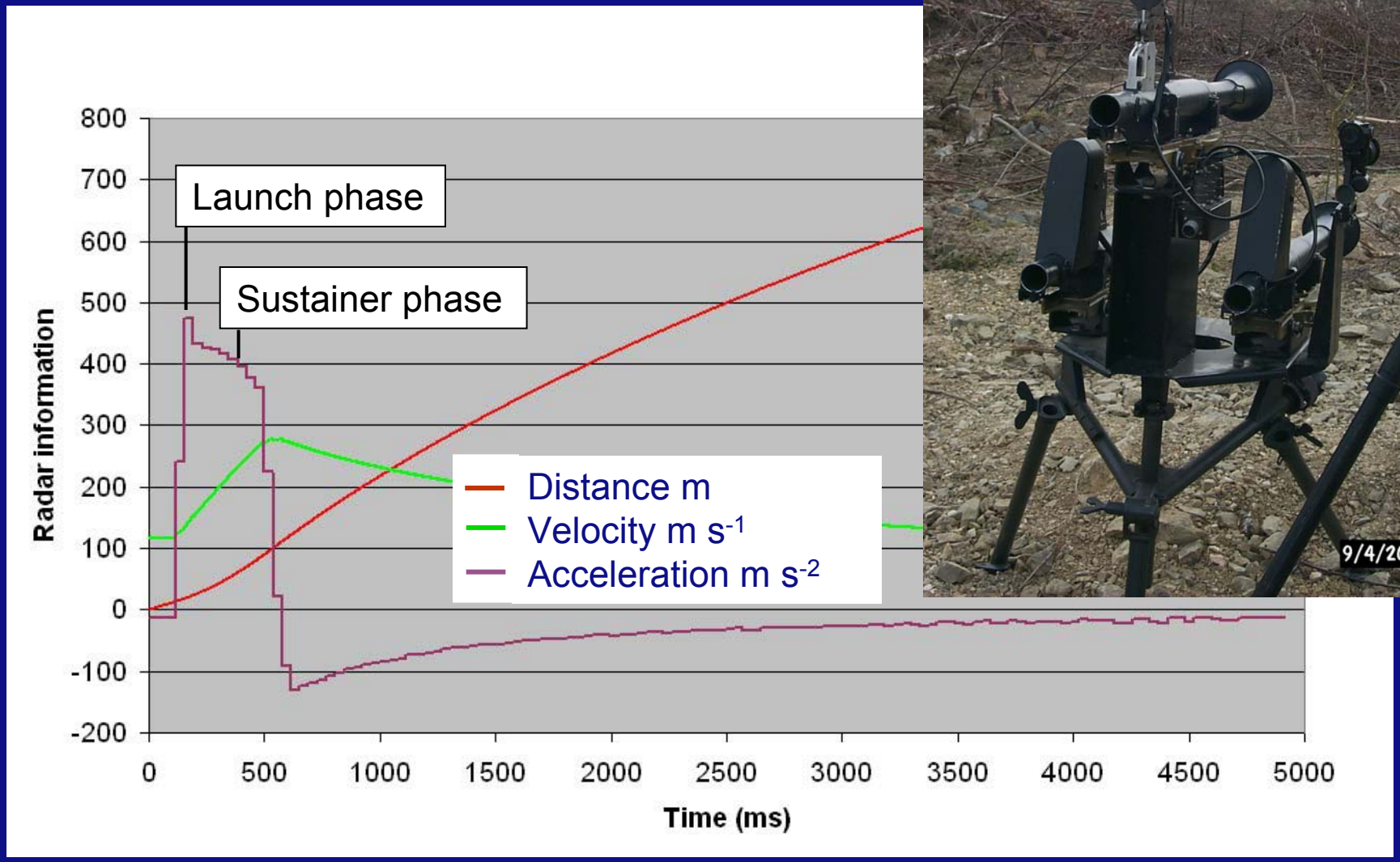

Experimental set-up

Gun

Capacitor bank

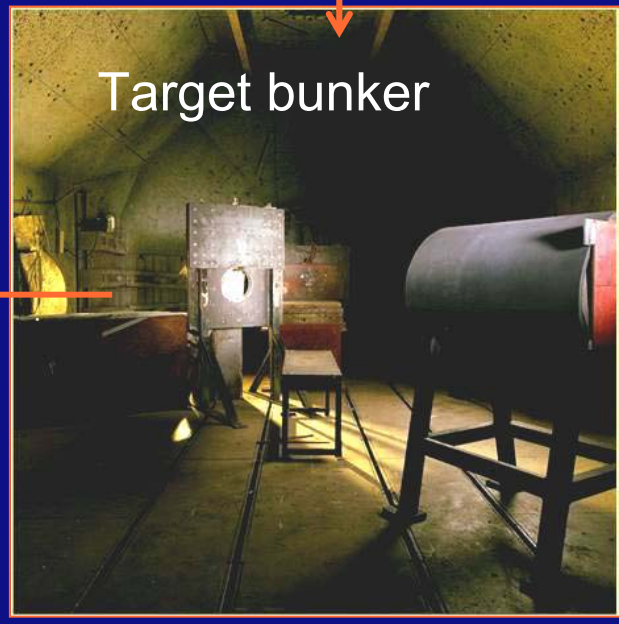

Target bunker

Coil

Steel plate; m=3kg