AGENT WITH REASONING AND LEARNING. THE STRUCTURE DESIGN

Dr. Leonid M. Polyakov
Globe Institute of Technology
New York, NY
Leonid@globeinstitute.org

ABSTRACT
Reasoning and learning are the most powerful intellectual functions. It is not easy to emulate them. Main problem is determined by nature of reasoning that is based on computation with words instead of computation with numbers. There are a lot of different approaches to the knowledge representation in the agent's knowledge base. The most important languages of knowledge representation are preposition logic and predicate logic. Design of the agent models of intentional (conscious) and unintentional (unconscious) reasoning (intuition) with multi-knowledge base structure based on preposition and predicate logic, learning and heuristic generation are topics of this discussion.
Keywords: *agent, design, learning, reasoning, preposition logic, predicate logic, knowledge base, rules of reasoning, application rule, hypothesis, intuition, multi-KB system.*

APPROACH TO THE PROBLEM SOLUTION

Reasoning, as we know, is the process of drawing conclusion from facts. There is a lot of research dedicated to the problems of reasoning and the agent structure design [1,2,4,6]. All of them are based on representation of knowledge as rule-based, semantic net or frame structure knowledge base. These knowledge bases (KB) include just knowledge of application (AKB) (domain oriented KB). Rules of reasoning are applied on AKB in different ways for different agents. The theorem prover is the representative of the system with reasoning but it is design without of the KB. Most of the existing systems with reasoning are not universal theorem prover (http://www-formal.stanford.edu/clt/ARS/Entries/acl2). These systems are based on rules of reasoning and don't work with application knowledge ether. Some of them, like ACL2, are designed as multi-KB systems. However, all these systems are based just on preposition logic. The most interesting result in the area of reasoning is the Jess language (Jess, the Java Expert System Shell, http://herzberg.ca.sandia.gov/jess/demo.html). This system is not the multi-KB system and has just one KB-AKB. Information is presented by predicate logic. Rules of reasoning are incorporated into source code. Idea of a multi-KB in search engines also was described by Dr. Lotfi Zadeh in "The Prototype-Centered Approach to Adding Deduction Capability to Search Engines- The Concept of Protoform" (BISC letter, 21 Dec 2001) http://www.cs.berkeley.edu/People/Faculty/Homepages/zadeh.html In this letter: "The deduction database is assumed to consist of logical database and a computational database, with the rules of deduction…"

Multi-KB structure is only the possible way to increase level of universality of the agent up to the level of AI system [5]. Separation of AKB and RKB from the program converts a conventional system into system with ability to learn, creates conditions for teaching the system through delivery new rules of application by an expert in area of application and reasoning without knowledge of programming. It is important step from a conventional system to the AI system. New rules should have the same structure as existing rules. New processes can be added as new program modules. Multi-KB structure creates conditions to design a system with ability to generate rules as possible hypothesis in the AKB (Fig.8). The first KB is application knowledge base-AKB; the second one is a reasoning KB-RKB. RKB has rules of reasoning. RKB is universal KB. It can be used with different AKB. The number of areas of application or number of Goals determines the number of AKB. The Double-KB structure of a system is shown on Fig.1. The process of reasoning is shown on Fig. 2. Complicated application rules should be decomposed to simple structure by rules of reasoning (And-Elimination rule-RR on Fig.2) application.

Process of reasoning in preposition logic is determined by terms of application rules (AR). Process of reasoning in predicate logic is determined by predicate of application rules (AR). Choice of rules of reasoning (RR) is determined by the structure of the application rule. New knowledge is generated by application rules to the World Model (WM). Technically a

Report Documentation Page

Form Approved
OMB No. 0704-0188

Public reporting burden for the collection of information is estimated to average 1 hour per response, including the time for reviewing instructions, searching existing data sources, gathering and maintaining the data needed, and completing and reviewing the collection of information. Send comments regarding this burden estimate or any other aspect of this collection of information, including suggestions for reducing this burden, to Washington Headquarters Services, Directorate for Information Operations and Reports, 1215 Jefferson Davis Highway, Suite 1204, Arlington VA 22202-4302. Respondents should be aware that notwithstanding any other provision of law, no person shall be subject to a penalty for failing to comply with a collection of information if it does not display a currently valid OMB control number.

1. REPORT DATE **AUG 2004**	2. REPORT TYPE	3. DATES COVERED **00-00-2004 to 00-00-2004**
4. TITLE AND SUBTITLE **Agent with Reasoning and Learning, The Structure Design**		5a. CONTRACT NUMBER
		5b. GRANT NUMBER
		5c. PROGRAM ELEMENT NUMBER
6. AUTHOR(S)		5d. PROJECT NUMBER
		5e. TASK NUMBER
		5f. WORK UNIT NUMBER
7. PERFORMING ORGANIZATION NAME(S) AND ADDRESS(ES) **Globe Institute of Technology,500 Seventh Ave,New York,NY,10018**		8. PERFORMING ORGANIZATION REPORT NUMBER
9. SPONSORING/MONITORING AGENCY NAME(S) AND ADDRESS(ES)		10. SPONSOR/MONITOR'S ACRONYM(S)
		11. SPONSOR/MONITOR'S REPORT NUMBER(S)

12. DISTRIBUTION/AVAILABILITY STATEMENT
Approved for public release; distribution unlimited

13. SUPPLEMENTARY NOTES
Proceedings of the 2004 Performance Metrics for Intelligent Systems Workshop (PerMIS -04), Gaithersburg, MD on August 24-26 2004

14. ABSTRACT
see report

15. SUBJECT TERMS

16. SECURITY CLASSIFICATION OF:			17. LIMITATION OF ABSTRACT	18. NUMBER OF PAGES	19a. NAME OF RESPONSIBLE PERSON
a. REPORT **unclassified**	b. ABSTRACT **unclassified**	c. THIS PAGE **unclassified**	**Same as Report (SAR)**	**8**	

Standard Form 298 (Rev. 8-98)
Prescribed by ANSI Std Z39-18

process of reasoning can be described as the chain of steps:

Data-AR activation-AR application to the WM (testing all chains of related knowledge)-RR activation

Fig. 3 shows four-steps algorithm. Fig.4 shows Forward-chain algorithm of reasoning that is based on rules RR15-RR17. Application of the rules RR1-RR14 is not shown. Fig.6 presents realization of multi-KB structure in the systems with preposition and predicate logic. Fig.7 presents realization of multi-KB structure in the systems with INTUITION. Definition and nature of intuition is described in [5]. Discover of the Dr. Ben Seymour (neuroscientist from London University College (http://news.bbc.co.uk/go/pr/fr/-/2/hi/health/3791357.stm) supports this hypothesis.

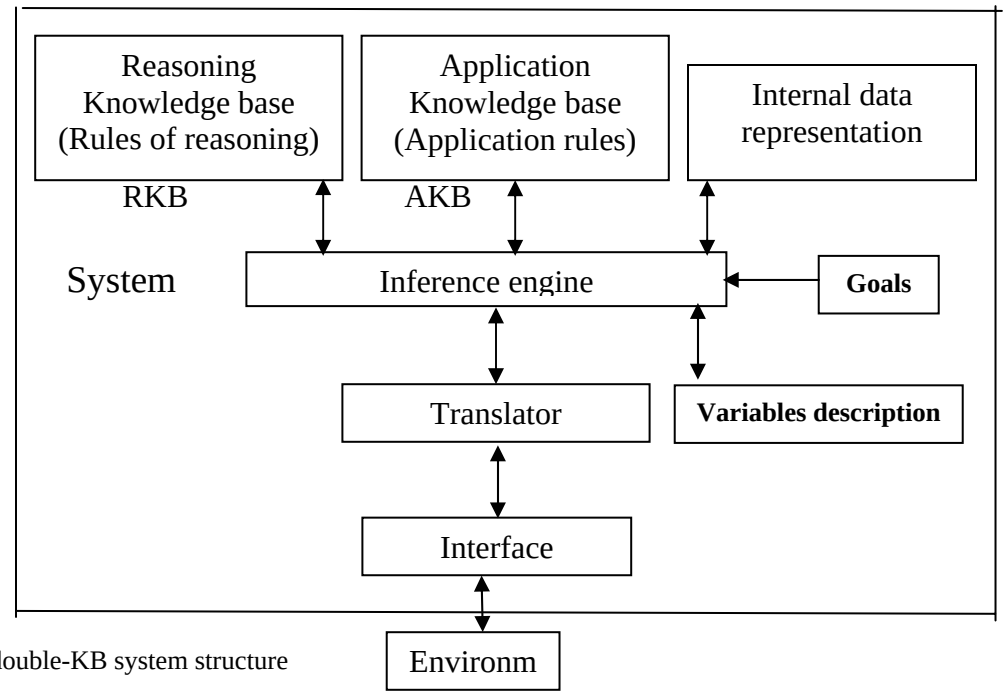

Fig. 1 The double-KB system structure

PREPOSITION AND PREDICATE LOGIC RULES OF REASONING

There is limited set of reasoning rules in preposition logic [1-5]:

RR1. Implication Elimination: $\alpha \Rightarrow \beta$, (modus ponens-mp) (IF α is in DB THEN $\beta \Rightarrow$ true)

RR2. And –Elimination: $\alpha_1 \wedge \alpha_2 \wedge \alpha_3 \wedge \alpha_n \Rightarrow LIST(\alpha_i)$, $LIST(\underline{\alpha_i}) = \alpha_1, \alpha_2, \alpha_3, \ldots \alpha_n$

$con(\alpha_i) \Rightarrow LIST(\alpha_i)$, [i=1,n]

RR3. And-Introduction: $\alpha_1, \alpha_2, \alpha_3, \ldots, \alpha_n \Rightarrow \alpha_1 \wedge \alpha_2 \wedge \alpha_3 \ldots \wedge \underline{\alpha_n}$

$LIST(\alpha_i) \Rightarrow con(\alpha_i)$, [i=1,n]

RR4. Or-Introduction: $LIST(\alpha_i) \Rightarrow \alpha_1 \vee \alpha_2 \vee \alpha_3 \vee \ldots \vee \alpha_n$ $\alpha_i = \underline{\alpha_1}, \alpha_2, \alpha_3, \ldots, \alpha_n$

$LIST(\alpha_i) \Rightarrow dis(\alpha_i)$, [i=1,n]

RR5. Double-Negation Elimination: $\neg \neg \alpha \Rightarrow \alpha$

RR6. Unit Resolution: $\alpha \vee \beta \wedge \neg \beta \Rightarrow \alpha$

RR7. Resolution: $\alpha \vee \beta \wedge \beta \vee \gamma \Rightarrow \alpha \vee \gamma$

RR8. Universal Elimination: $\forall \nu \ \alpha(\nu) \Rightarrow \alpha(g)$, (from DB: $\nu = g$)

RR9. Existential Elimination: $\exists \nu \ \alpha(\nu) \Rightarrow \alpha(g)$ (from DB: $\nu = g$)

RR10..Existential Introduction: $\alpha(g) \Rightarrow \exists \nu \ \alpha(\nu)$ (from DB: $\nu = g$)

RR11. DeMorgan Laws

RR12 Universal Generalization: $(\forall x) P(x)$

RR13 Existential Generalization: $(\exists x) P(x)$

RR14 Rules of induction: $P(1)=T$

$(\forall k) \{[P(k)=T] \Rightarrow [P(k+1)=T]\} \rightarrow P(n) \Rightarrow T$

RR15 Associative law

This set of rules creates the universal RKB.

Example of the process of reasoning.
Suppose, DB initially includes facts A, B, C, D, and E, and AKB contains **application** rules:

AR1: IF Y is true
AND S is true AR3

AND D is true
THEN Z is true

AR2: IF X is true
AND B is true
AND E is true
THEN Y is true

AR3: IF A is true
THEN X is true

AR4: IF P is true
THEN $S \wedge B \wedge W$ is true

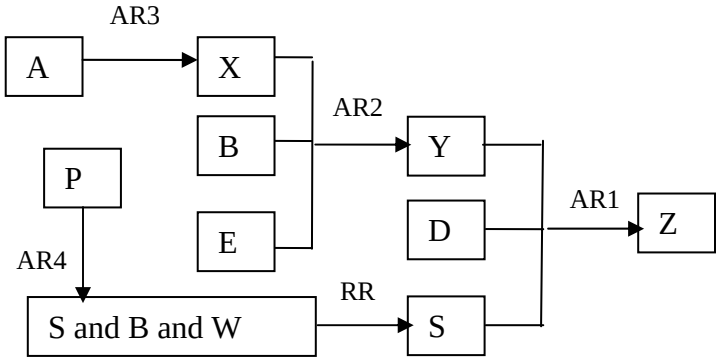

RR: IF S and B and W is true THEN S is true

Fig. 2 An inference (forward) chain in a system based on proposition logic.

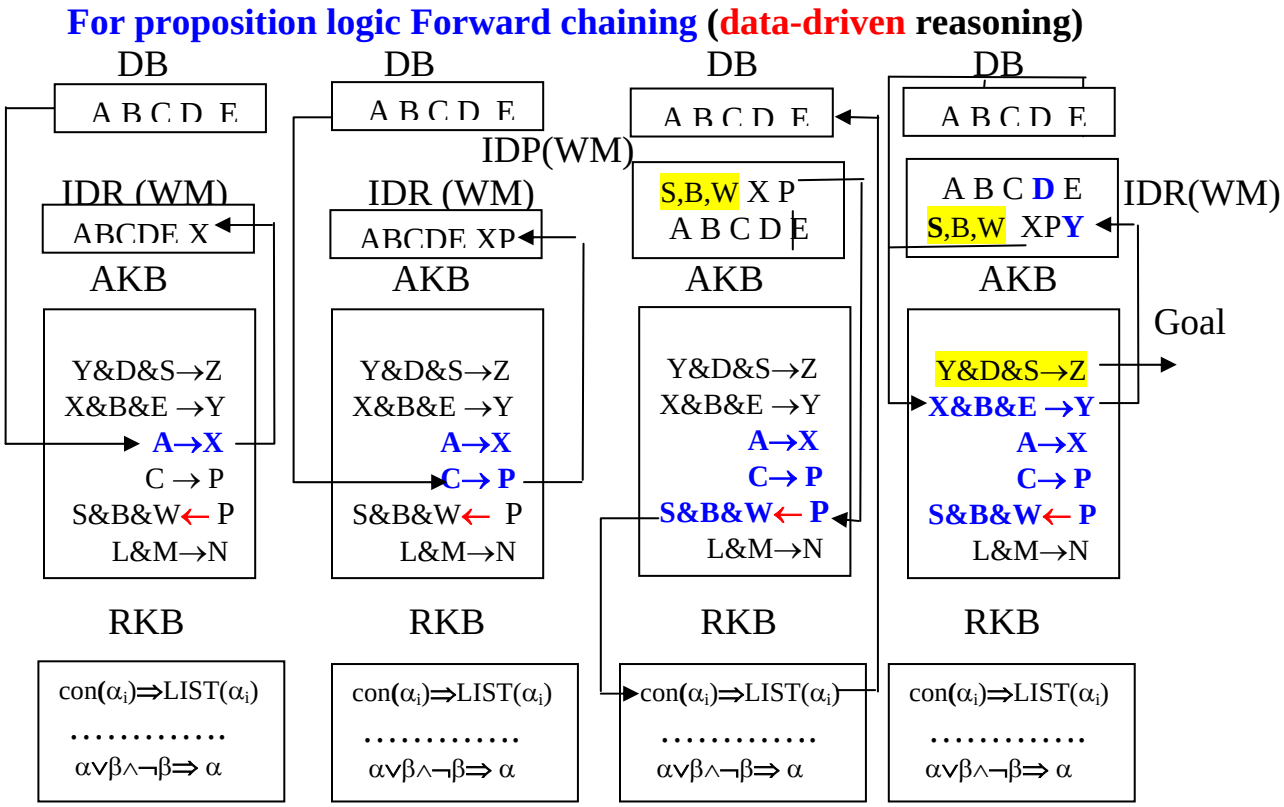

Fig.3 The system structure and algorithm. IDR-internal data representation, WM-World Model, AKB-application knowledge base, DB-Data base (external data representation), RKB-reasoning knowledge base

SYSTEMS ARE BASED ON PREDICATE LOGIC

Syntax in predicate logic can be presented as: PREDICATE (LIST OF TERMS - OBJECTS)
PREDICATES: RELATIONSHIP, PROPERTIES, and FUNCTIONS.
Suppose, the following facts in the predicate Logic using meaningful predicates and functions rules.

Rules of application

1) Anyone sane does not teach an AI course.
   $\forall x\ sane(x) \rightarrow \neg\ AIInsructor\ (x)$)
2) Every circus elephant is a genius.
   $\forall x CircusElephant(x) \rightarrow genius(x)$
3) Nothing is both male and a circus elephant.
   $\neg\ \forall x\ Male(x) \Leftrightarrow CircusElephant(x)$
4) Anything not male is female.
   $\neg \forall x\ Male(x) \Leftrightarrow Female(x)$

Data

1) Clyde is not an AI instructor. $\neg AIInsructor(Clyde)$
5) Clyde is a circus elephant. $CircusElephant(Clyde)$

Determine state of the following is true, false or cannot be determined based on the application rules:
Clyde is a genius.

Rules of reasoning include all rules of reasoning based on preposition logic and set of rules that are specific to the predicate logic:
RR16. Find all atomic sentences that related to the first term in DB
RR17. Find all atomic sentences with conclusion that related to the predicate of the result of RR1 action
RR18. Check each of them against solution question.

ALGORITHM OF REASONING

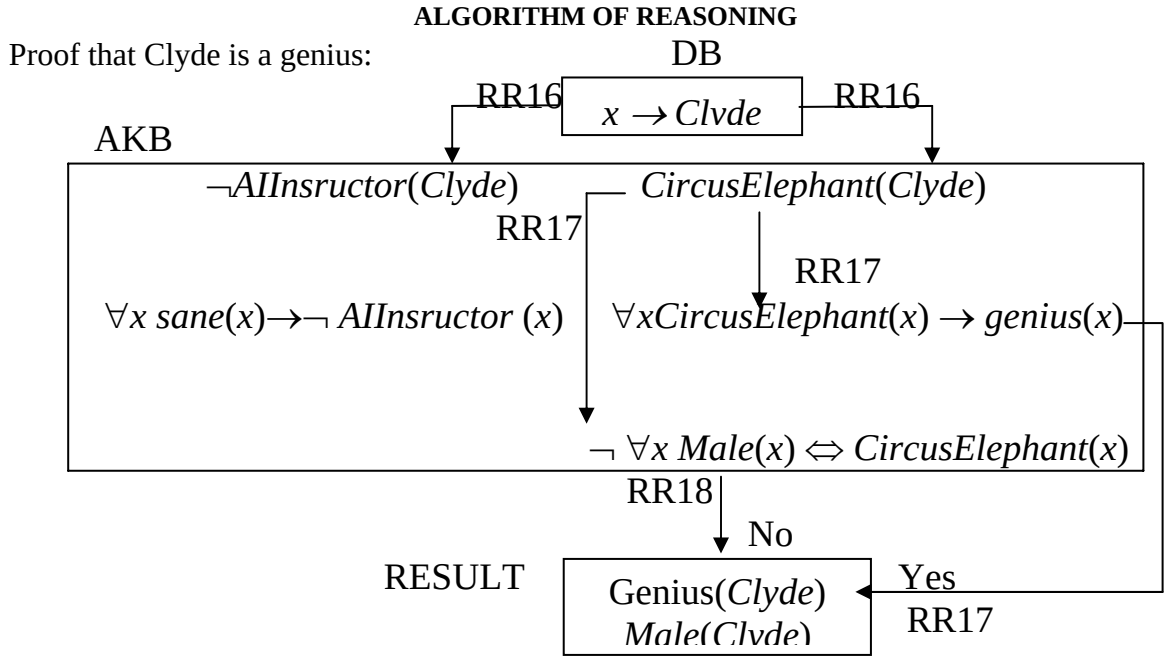

Fig.4 shows Forward-chain algorithm of reasoning based on rules RR15-RR17. Action of the RR1-RR14 is not shown.

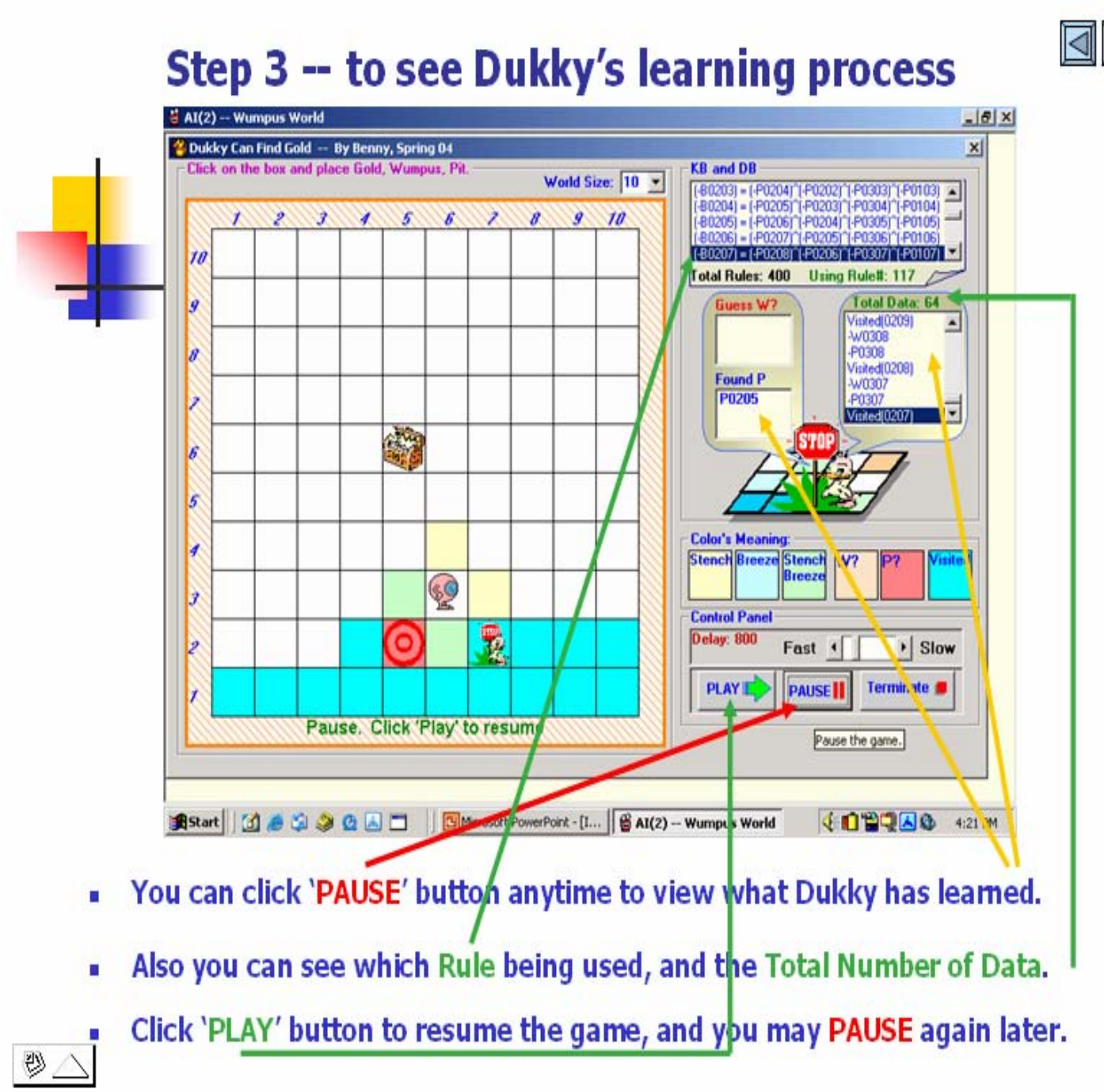

Fig.5 “Wumpus World” model (preposition logic).

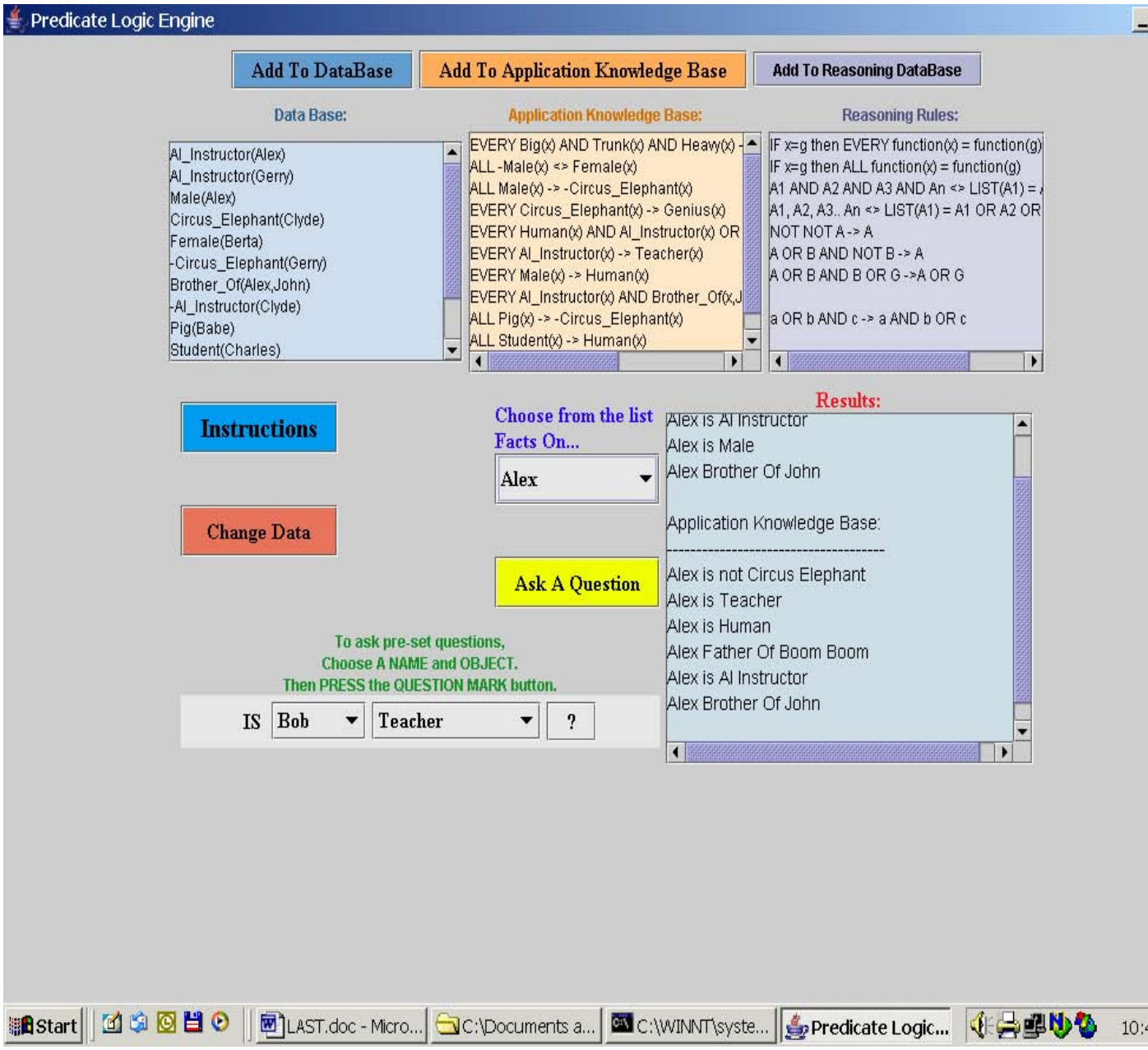

Fig. 6. This system (predicate logic language) is based on the algorithm presented by Fig, 4

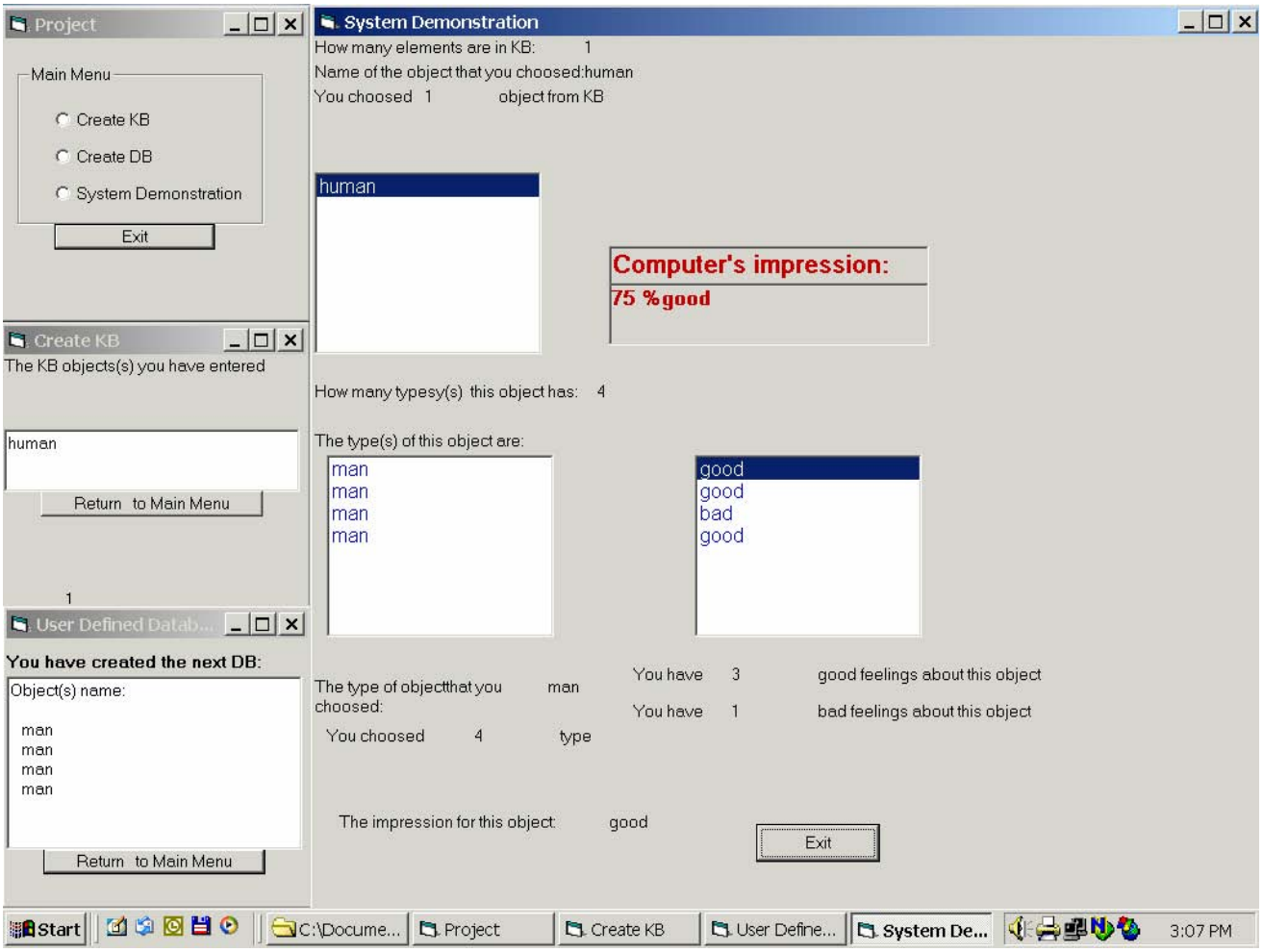

Fig 7. Modeling of INTUITION.

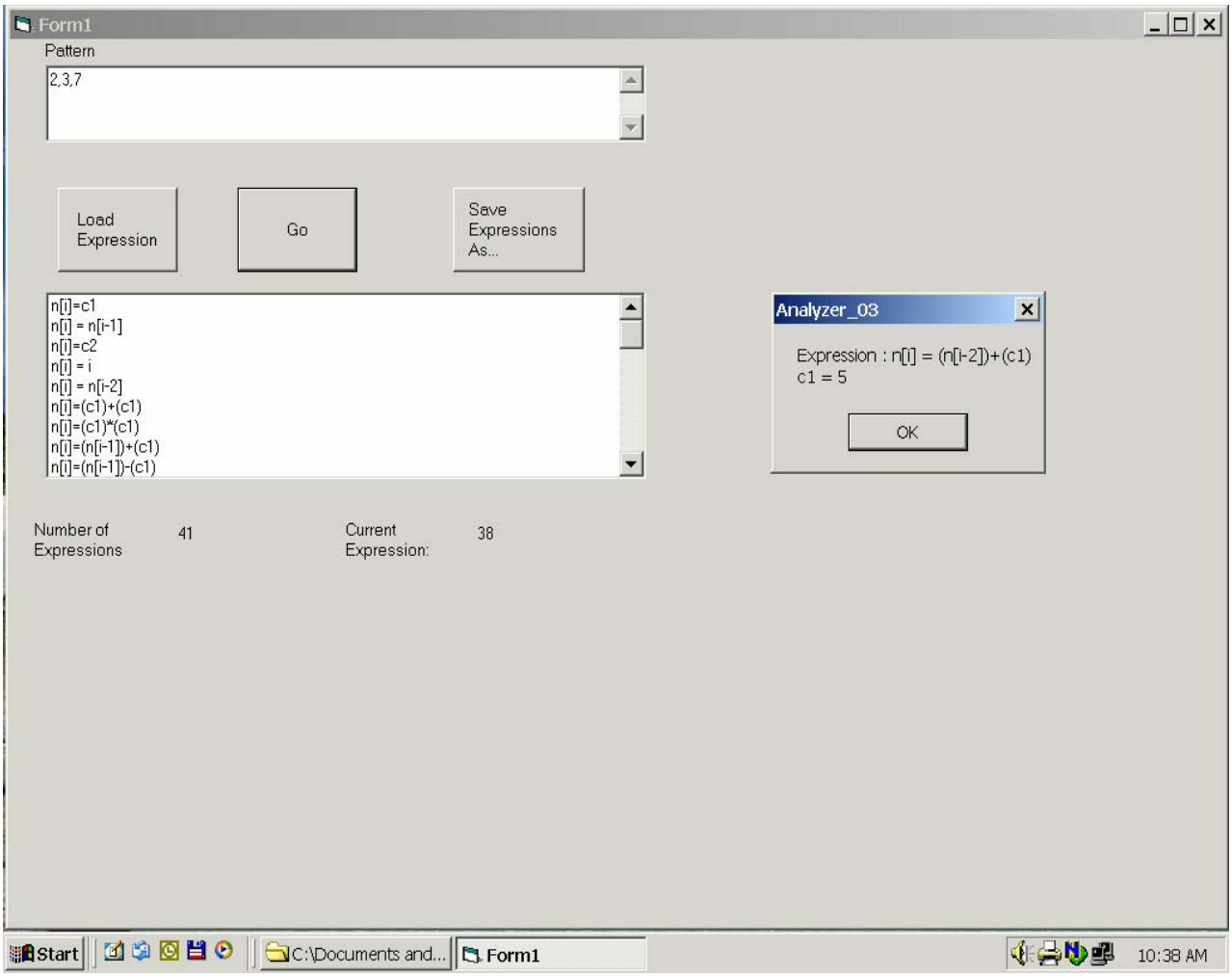

Fig 8. Hyphotheses generator. First 5 expressions are basic knowledge in math, rest of the expressions are generated as the heuristics to mach to the presented set of numbers. Analyzer shows correct expression. This system has a very limited basic math knowledge..

References

[1] Cawsey A. The Essence of Artificial Intelligence. Prentice Hall, 1995

[2] Dean T., Allen J., Aloimonos Y. Artificial Intelligence. Theory and Practice. The Benjamin/Cummings Publishing Company, 1995.

[3]. Gersting J. Mathematical Structures For Computer Science, W. H. Freeman and Co. 1999

[4] Negnevitsky M. Artificial Intelligence. A Guide to Intelligence Systems, Addison-Wesley, 2001

[5] Polyakov L. Structure Approach to the Intelligent System Design. Proceedings of the 2002 PerMIS Workshop August 13-15, 2002.

[6] Russell S. Norvig P. Artificial Intelligence. A Modern Approach. Prentice Hall, 1995