UNCLASSIFIED

AD NUMBER
ADB016657
LIMITATION CHANGES
TO: **Approved for public release; distribution is unlimited.**
FROM: **Distribution authorized to U.S. Gov't. agencies only; Test and Evaluation; JUL 1976. Other requests shall be referred to Air Force Avionics Lab., Wright-Patterson AFB, OH 45433.**
AUTHORITY
AFAL ltr 7 May 1979

THIS PAGE IS UNCLASSIFIED

THIS REPORT HAS BEEN DELIMITED
AND CLEARED FOR PUBLIC RELEASE
UNDER DOD DIRECTIVE 5200.20 AND
NO RESTRICTIONS ARE IMPOSED UPON
ITS USE AND DISCLOSURE.

DISTRIBUTION STATEMENT A

APPROVED FOR PUBLIC RELEASE;
DISTRIBUTION UNLIMITED.

AFAL-TR-76-199

ADB016657

RECEIVER ANALYSIS PROGRAM

PASSIVE ELECTRONIC COUNTERMEASURES BRANCH
ELECTRONIC WARFARE DIVISION

DDC
FEB 25 1977
C

DECEMBER 1976

TECHNICAL REPORT AFAL-TR-76-199
INTERIM REPORT FOR PERIOD OCTOBER 1974 to NOVEMBER 1975

Distribution limited to U. S. Gov't. agencies only; test and evaluation; statement applied July 1976. Other requests for this document must be referred to the Air Force Avionics Laboratory (Electronic Warfare Division), Wright-Patterson AFB, OH 45433.

AD NO.
DDC FILE COPY

COPY AVAILABLE TO DDC DOES NOT PERMIT FULLY LEGIBLE PRODUCTION

AIR FORCE AVIONICS LABORATORY
AIR FORCE WRIGHT AERONAUTICAL LABORATORIES
AIR FORCE SYSTEMS COMMAND
WRIGHT-PATTERSON AIR FORCE BASE, OHIO 45433

AFAL-TR-76-199

NOTICE

When Government drawings, specifications, or other data are used for any purpose other than in connection with a definitely related Government procurement operation, the United States Government thereby incurs no responsibility nor any obligation whatsoever; and the fact that the government may have formulated, furnished, or in any way supplied the said drawings, specifications, or other data, is not to be regarded by implication or otherwise as in any manner licensing the holder or any other person or corporation, or conveying any rights or permission to manufacture, use, or sell any patented invention that may in any way be related thereto.

This technical report has been reviewed and is approved for publication.

James B.Y. Tsui
J.B.Y. Tsui, PhD
Project Engineer

S.D. Johnson
S.D. Johnson
Mathematician

W.T. Brumfield
W.T. Brumfield
Project Engineer

William F. Bahret
WILLIAM F. BAHRET
Actg Chief, Passive ECM Branch
Electronic Warfare Division

FOR THE COMMANDER

Ollie H. Edwards

OLLIE H. EDWARDS
Colonel, USAF
Chief, Electronic Warfare Division

Copies of this report should not be returned unless return is required by security considerations, contractual obligations, or notice on a specific document.

AIR FORCE - 17 JANUARY 72 - 150

UNCLASSIFIED

SECURITY CLASSIFICATION OF THIS PAGE (When Data Entered)

REPORT DOCUMENTATION PAGE

READ INSTRUCTIONS BEFORE COMPLETING FORM

1. REPORT NUMBER: AFAL-TR-76-199
2. GOVT ACCESSION NO.
3. RECIPIENT'S CATALOG NUMBER
4. TITLE (and Subtitle): Receiver Analysis Program
5. TYPE OF REPORT & PERIOD COVERED: Interim Report, Oct 74 to Nov 75
6. PERFORMING ORG. REPORT NUMBER
7. AUTHOR(s): J.B.Y. Tsui, [redacted] S.J. Johnson, W.T. Brumfield
8. CONTRACT OR GRANT NUMBER(s)
9. PERFORMING ORGANIZATION NAME AND ADDRESS: Air Force Avionics Laboratory (WRP), Wright-Patterson AFB, OH 45433
10. PROGRAM ELEMENT, PROJECT, TASK AREA & WORK UNIT NUMBERS: 62204F, 7633, 76331115
11. CONTROLLING OFFICE NAME AND ADDRESS: Air Force Avionics Laboratory (WRPO), Wright-Patterson AFB, OH 45433
12. REPORT DATE: December 1976
13. NUMBER OF PAGES: 71
14. MONITORING AGENCY NAME & ADDRESS (if different from Controlling Office)
15. SECURITY CLASS. (of this report): Unclassified
15a. DECLASSIFICATION/DOWNGRADING SCHEDULE

16. DISTRIBUTION STATEMENT (of this Report)

Distribution limited to U.S. Gov't. agencies only; test and evaluation; statement applied July 1976. Other requests for this document must be referred to the Air Force Avionics Laboratory (Electronic Warfare Division), Wright-Patterson AFB, OH 45433.

17. DISTRIBUTION STATEMENT (of the abstract entered in Block 20, if different from Report)

18. SUPPLEMENTARY NOTES

DDC FEB 25 1977

19. KEY WORDS (Continue on reverse side if necessary and identify by block number)

Microwave receivers
Computer modeling
Receiver noise
Spurious response

20. ABSTRACT (Continue on reverse side if necessary and identify by block number)

There are many approaches to the design of microwave receivers. Each approach will use a large number of components with different specifications. It is necessary for the designer to predict the performance of all the designs in order to optimize the receiver, which is a tedious calculation. This report presents a computer program which will do these calculations. The program is basically self-explanatory, since it is written in an interactive conversational mode for on-line execution via an intercom terminal. Questions and explanatory comments

OVER

DD FORM 1 JAN 73 1473 EDITION OF 1 NOV 65 IS OBSOLETE

UNCLASSIFIED

SECURITY CLASSIFICATION OF THIS PAGE (When Data Entered)

011 670

6pg

are put to the user during execution, which help to guide him in the use of the program. It can be used either through an intercom or batch terminal. The program uses the specifications of the receiver components as input, i.e., gain, noise figure, intermod point, etc. The output of the program will not only generate the important characteristics of the receiver, such as sensitivity, dynamic range, and spurious product, but also indicate the elements that limit the performance, by generating the percentage of contribution by each component. One can also easily add a new component to a receiver, eliminate an old one or change the specifications of a component. In case one intends to cover a wider instantaneous bandwidth, for example, in channelized receivers with less hardware, a fold mode can be used. This program can handle the noise figure of the fold mode, provided that the different front ends of the receiver have the same noise figure.

FOREWORD

This report presents a computer program aid for use in the design and evaluation of electronic warfare receivers. It is a modification of the Receiver Signal Path Analysis Program (RSPAP), which was created by the McDonnell-Douglas Company. It is an interim report in the continuing effort to update design, performance, and analysis capabilities of the program.

This technical report was prepared by Dr. J. B. Y. Tsui and Mr. W. T. Brumfield of the Passive Electronic Countermeasures Branch, Electronic Warfare Division, The Air Force Avionics Laboratory, Wright-Patterson AFB, Ohio, under Project 7633, Task 1115. Ms. S. J. Johnson of the Digital Programming Branch, ASD Computer Center, wrote the computer program for the receiver modeling. The work period for this effort extended from October 1974 to November 1975.

ACCESSION for
NTIS White Section
DDC Buff Section
UNANNOUNCED
JUSTIFICATION
BY
DISTRIBUTION/AVAILABILITY CODES
Dist. AVAIL. and/or SPECIAL
B

TABLE OF CONTENTS

SECTION		PAGE
1.	INTRODUCTION	1
2.	INPUT INFORMATION PREPARATION	1
2.1	Intercom Mode	1
2.2	Batch Mode	5
3.	PROGRAM CHOICES	6
3.1	Intercom Mode Operation	6
4.	OUTPUT INFORMATION	7
4.1	Noise Figure Performance Table	7
4.2	Third Order Intermod Performance	8
4.3	Dynamic Range Computation	9
4.4	Spur Computations	11
5.	CONCLUSIONS AND RECOMMENDATIONS	11
5.1	Conclusions	11
5.2	Recommendations	13
REFERENCES		14
Appendix A.	Data Input and Editing	15
Appendix B.	Computation of Performance Parameters	57
Appendix C.	Computer Program Listing	62

LIST OF ILLUSTRATIONS

FIGURE		
1.	Receiver Block Diagram Sample	2
2.	Typical Third Order Intermodulation Performance	10
3.	Down-Converter Spurious-Effects Chart	12

PRECEDING PAGE BLANK-NOT FILMED

1. INTRODUCTION: The objective of this effort was to develop a receiver modeling program to aid in the design of and evaluation of electronic warfare receivers. Specifically, this program was developed to evaluate the design of channelized and superheterodyne receivers and predict their performance characteristics based on signal path analysis and specifications of the functional components. This (computer) program is a modification of Receiver Signal Path Analysis Program (RSPAP), created by McDonnell-Douglas Company. The program will compute the performance of a microwave receiver, given the proper input information. It will not only generate tabulated printouts of the important characteristics of the receiver, such as sensitivity, dynamic range, etc., but also indicate the elements that limit the performance. Elements can be changed, added, or eliminated easily in the design to generate a new set of performance parameters. It accepts inputs from either the intercom terminal or batch terminal (punched cards), and has the flexibility to accommodate a wide range of receiver design plans. Continued effort is being made to update this program to incorporate new receiver designs and improve its analysis ability.

2. INPUT INFORMATION PREPARATION

2.1 INTERCOM MODE: To run the receiver simulation in either the intercom or batch mode, the necessary inputs and corresponding or desired outputs must be specified. Input data preparation involves, first of all, development of a functional block diagram (see Figure 1) and assignment of a receiver identification number. The number assigned to a special receiver actually assigns a file to save the input data for future use. The receiver block diagram must be divided into consecutively numbered blocks, starting with number 1 for the first block at the receiver input. The number of

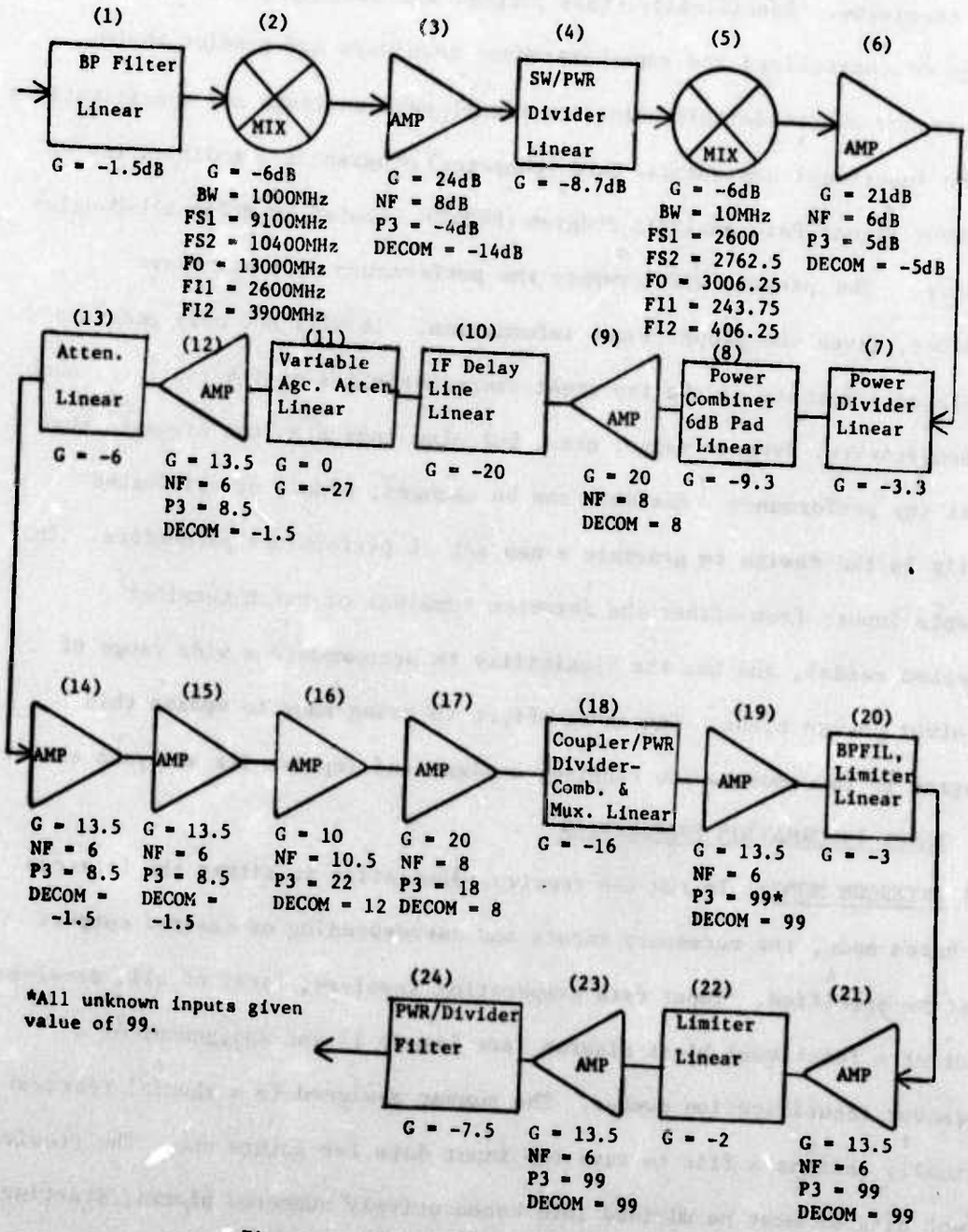

Figure 1 RECEIVER BLOCK DIAGRAM SAMPLE

blocks specified includes all of the components from the input to the detector (which is not included in this program). Each functional block is assigned a number and block-type. A maximum of 50 blocks is permitted. Four block types can be handled by the program: Amplifier, Linear, Mixer, and Fold. The pertinent data required for each block type are listed below:

A. Amplifier: All active elements in the receiver signal path, such as amplifiers, belong to this class. The gain (G) and noise figure (NF) in dB, third order intermodulation (intermod) intercept point (P3), and 1 dB compression point (DECOM), all referred to input, are the necessary input information.

B. Mixer: The required inputs for this type block are the mixer gain or loss in dB (negative dB's for conversion loss), the third order intermodulation intercept point (referred to input), 1 dB compression point (referred to input), input frequency range (FS1 to FS2), local oscillator frequency (FO), output frequency range (FI1 to FI2), and the desired resolution bandwidth (BW). This resolution bandwidth has no relation to the input or output frequency range. It is used to calculate the sensitivity, therefore, the narrowest bandwidth in the signal path before the detector is generally used. The input and output frequency ranges are used to predict the inband spurious responses (spurs). All frequencies are in MHz.

C. Linear Elements: All passive components such as filters, power dividers, attenuators, etc., are classified as linear. Even some of the nonlinear elements, such as limiters, are classified as linear; therefore, the intermod of the limiter cannot be predicted. Most of these elements are passive and their linear region is assumed infinite or (99 dB) in the

program. The necessary input information is insertion loss (designated as negative gain in dB). The linear elements are divided into two groups (fixed gain and variable gain elements). Elements with fixed loss require only one input. If the element has variable losses, maximum and minimum values are needed.

D. Fold: This imaginary block is used to permit computation of the noise performance of channelized receivers when several parallel front ends or input branches are combined in a single output. The present program will only permit the combination of receiver front ends with identical noise figures for the signal path up to the power combiners. Front ends having different noise figures must be calculated separately since each individual network may have its own bandwidth, noise, and gain. Provisions for combining the net noise of front ends with different noise figures were not incorporated in this program. To analyze receiver performance in the fold mode, the number of identical branches to be combined must be specified. Zero insertion loss and 99 dB dynamic range are assumed for this block. The insertion loss of the power combiner can be expressed by a linear element following the fold block.

In all elements, an output bandwidth of 2.0 GHz is automatically assumed unless it is critical to the computation involved; in which case, the output bandwidth is specified. The engineer has to use his judgment on inserting the right information. For example, in cases where an amplifier follows a limiter, the dynamic range of the amplifier is not significant, since the level of intermod products generated in the limiter restrict overall receiver dynamic range. Therefore, in the design procedure, the limiter has to either follow the last filter or provision must be made to

avoid more than one signal being present at the limiter simultaneously.

2.2 BATCH MODE: To run a batch receiver simulation, a card deck is required. The program places the data on a file called TAPE1 so the simulation program can treat it as a previously defined receiver. The only card input to the program is the receiver number, which must be greater than 50.

The input format for receiver data is as follows:

Card Type 1

col 1 - 2 receiver number

3 - 4 number of blocks

NOTE: Any value omitted in card types 2 or 3 will be treated as a zero value. A decimal point must be present in any value input.

Card Type 2

col 1 - 10 max gain

11 - 20 max noise

21 - 30 min gain

31 - 40 min noise

41 - 50 third order intercept

51 - 60 bandwidth

61 - 80 not used by program; available for comments

Note: For a fold block columns 1 - 50 must be zeros.

Card Type 3

col 1 - 10, 1 dB compression point

11 - 20 lower limit of RF input frequency

21 - 30 upper limit of RF input frequency

31 - 40 local oscillator frequency

41 - 50 lower limit of IF input frequency

51 - 60 upper limit of IF input frequency

61 - 80 not used by program; available for comments

Note: For a fold block, columns 1 - 11 must be zero and columns 51 - 60 the number of parallel branches folded.

A card of each type must be present for each block in the receiver. The cards must be in ascending block number order with all type 2's preceding the type 3's, also in block number order.

To run multiple receivers, simply add data decks after first receiver data.

3. PROGRAM CHOICES

3.1 INTERCOM MODE OPERATION: To run the program in the intercom mode, required input data are fed to the computer through a simple question and answer procedure. These questions are self explanatory. For example, the user types in a number (integer 1 to 50) in answer to the question "Receiver Number?". This number identifies the receiver and its associated data file for future use. The user types in YES or NO depending on whether or not a data file has been opened previously for the receiver number identified. Subsequent input data are fed to the computer in a similar manner (see sample printout in Appendix A). A YES or NO answer enables or inhibits in turn, computation of the following parameters:

1. Noise figure and sensitivity.

2. Third order intermodulation products (intermods) and the amplitudes of the input signals where the third order intermod equals noise level.

3. All inband spurious responses (spurs) to the 6th order. The amplitude of the spurs are not calculated.

4. The one (1) dB compression dynamic range.

After all of the inputs are fed into the computer, the program then lists all the source data in tabulated form and gives the user an opportunity to edit the data prior to running the program. Editing provisions in the program permit correcting any errors observed in the listed input data. The user may change, add or delete a block; however, he must specify the type of change desired and identify the proper block number to correct data or delete a block. A block may be added by inserting the preceding block number, then all of the block numbers following the added block will automatically be increased by one. When new information is inserted for a change or add block, twelve columns of data are required. The columns of data are maximum and minimum values of gain, noise figure (in case of linear elements it is a positive number which equals to the loss of the element), third order intercept point, bandwidth, one dB compression point, lower limit of input frequency, upper limit of input frequency, local oscillator frequency, lower limit of IF output, and upper limit of IF output. Examples of editing input data are given in Appendix A.

4.0 OUTPUT INFORMATION: The output information is explained briefly in the computer printout form. Their significance will be explained as follows: The computer will use all the maximum values and all the minimum values in the variable linear computation. The tabulated results of noise figure performance, third order intermod performance, and dynamic range are listed for the receiver maximum and minimum gain conditions.

4.1 NOISE FIGURE PERFORMANCE TABLE

The qualities FTOT, FRAC, CUM, F(I), and SEN are printed out in the noise figure table by block number for maximum and minimum receiver gains.

The standard formulas[1] used for computing these quantities are listed in Appendix B.

FTOT: Noise figure from the first block all the way to the I-th Block and the noise figure after the I-th block.

FRAC: Percentage of noise contribution from the I-th block. If one wants to improve the noise figure the blocks with the higher percentage will be fixed first.

CUM: Sum of FRAC from the 1st to the I-th block.

F(I): Noise figure in dB looking into the I-th block.

SEN: Sensitivity in dBm looking into the I-th block with a signal to noise ratio of 0 dB.

4.2 THIRD ORDER INTERMOD PERFORMANCE

The third order intermod performance table is a printout of P3TOT, FRAC, CUM, P3(I), and Q.

P3TOT: Third order intercept point (referred at the input of the receiver) from the 1st block to the I-th block.

FRAC: Relative intermod degradation contributed by each block. Note that the block which has the largest value limits the intermod of the receiver.

CUM: Sum of FRAC for the first I blocks.

P3(I): Third order intercept in dBm looking into the I-th block.

Q: Power level of two equal amplitude signals applied into the I-th block which produce intermods equal to the noise level.

The key parameters in this table that are useful in evaluating the receiver's intermod performance are the intercept point, P3(I), FRAC, and Q. Due to the inherent nonlinearities of amplifiers and mixers used in receivers,

intermodulation and harmonic distortion products are generated which limit the dynamic range. The level of the distortion product relative to the signal level can be calculated from the intercept point, or conversly, the intercept point can be calculated from the relative suppression (SEN-Q). The intercept point is the theoretical point of intersection of fundamental response and the third order response curves, and is shown in figure 2 for the receiver third order two tone performance characteristics.[2] The range from SEN to Q gives the dynamic range of the receiver (usually referred to as two tone dynamic range). For example, suppose one desires to determine the two tone dynamic range (DR) of the receiver in figure 1, where the third order intercept point ($P_3(I)$=-10.5 dBm), noise figure (F(1)n=24.2 dB), and the receiver's resolution bandwidth (BW=10 MHz) are given. The sensitivity (SEN), Q, and two tone dynamic can be computed.

$$SEN = -114 \text{ dBm} + F(I) + 10 \log \frac{BW(MHz)}{1 \text{ MHz}}$$

$$= -114 + 24.2 + 10 = -79.8 \text{ dBm}$$

$$Q = 1/3 \text{ SEN} + 2/3 \; P_3(I) = -79.8/3 + 2/3 \; (-10.5) = -33.6 \text{ dBm}$$

$$DR = |SEN-Q| = |-79.8 - (-33.6)| = 46.2 \text{ dB}$$

Note how close the above values, the tabulated printouts for block 1, and the values obtained from figure 2 agree. Laboratory measurements of the channelized receiver's performance confirmed the tabulated computer printouts.

4.3 <u>DYNAMIC RANGE COMPUTATION</u>: This table lists the quantities G, DECOM, DTOT, GTOT, and D(I) which may be used to compute the 1 dB compression dynamic range.

G: Gain in dB of I-th block

DECOM: 1 dB compression point of block I (referred at the input of the component).

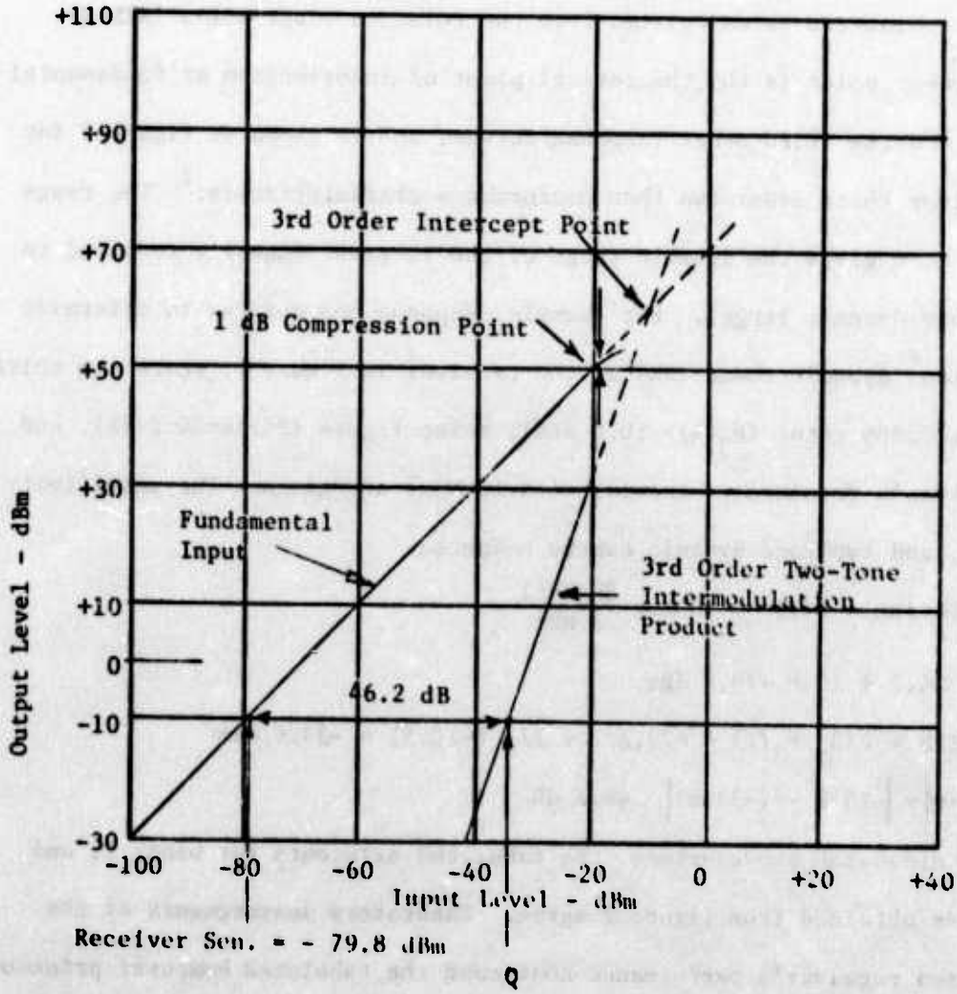

Figure 2. Typical Third Order Intermodulation Performance

(Minimum Gain Condition)

DTOT: Is the 1 dB compression of the first I blocks

GTOT: Is the sum of G

D(I): Is the 1 dB compression point looking into Ith block

The dynamic range of a receiver for a signal can be defined as the range between the input signal level that causes 1 dB of gain compression and the minimum input signal level that can be detected above the receivers noise level.

4.4 SPUR COMPUTATIONS: The spur table lists the quantities FSA, FSB, FSC, and FSD for each spur (combination of signal frequency multiple M, and local oscillator multiple N for M and N = 0 thru 6). These quantities identify the the intersection of the spur and the intermediate frequency (IF) output as shown in the mixer spurious effects chart[1] of figure 3. The heavy line shows the variation of normalized output frequency (H-L)/H with the normalized input frequency (L/H). H = the high input frequency; L = the low input frequency.

FSA: Frequency at which MFS-NFO intercepts the lower limit of the IF (FI1), where FS and FO are the signal and local oscillator frequencies respectively. Note that in figure 1 the local oscillator frequency is the high input and the signal frequency is the low input.

FSB: Frequency at which MFS-NFO intercepts the upper limit of IF (FI2).

FSC: Frequency at which NFO-MFS intercepts FI1

FSD: Frequency at which NFO-MFS intercepts FI2.

5. CONCLUSIONS AND RECOMMENDATIONS

5.1 CONCLUSIONS: In conclusion, the receiver signal path analysis program serves as a convenient tool for applying computer modeling to expedite receiver performance evaluation. Although there are various other ways of implementing receiver modeling, the signal path analysis approach is

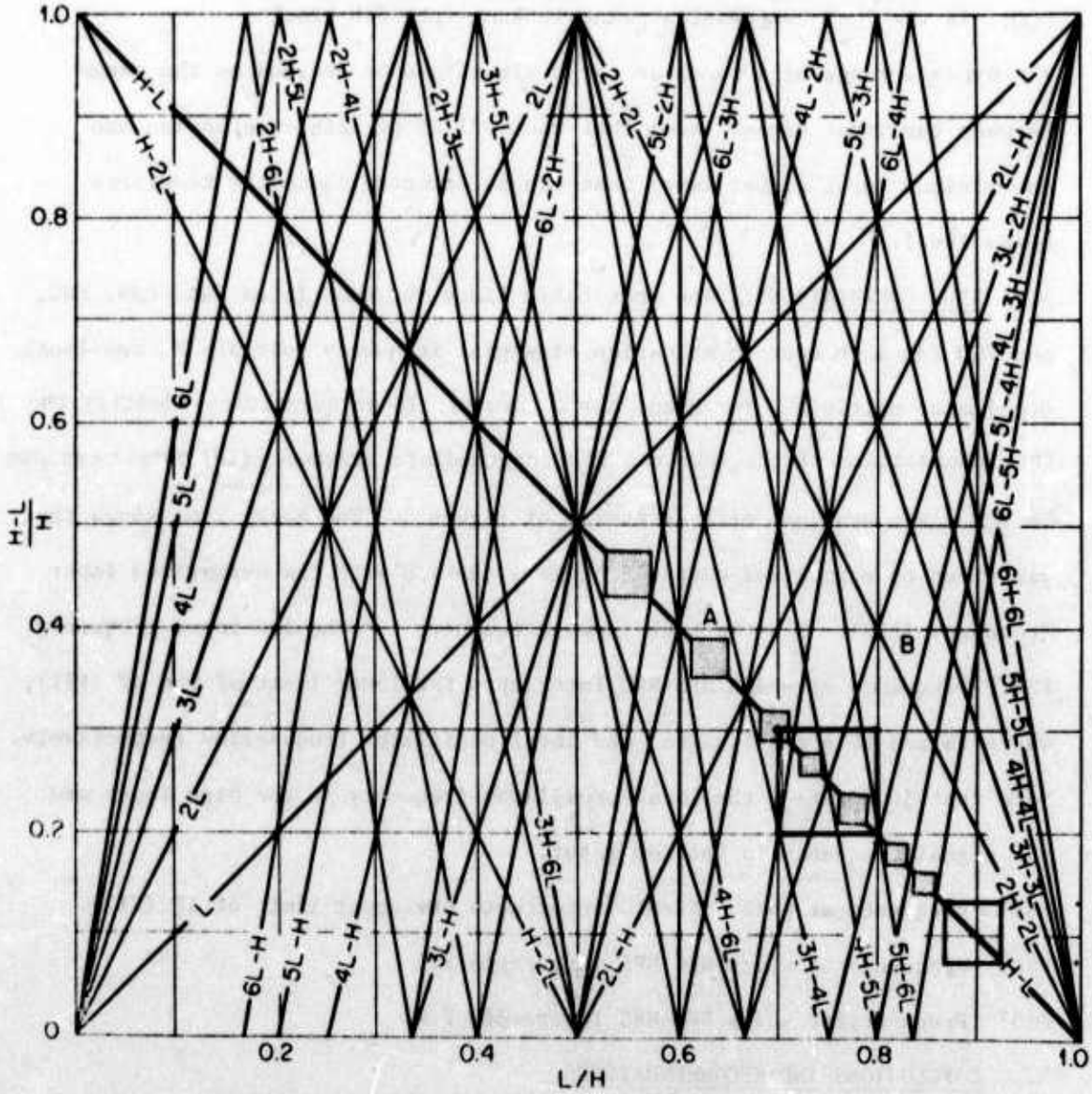

Figure 3. Down-Converter Spurious-Effects Chart; H = High Input Frequency, L = Low Input Frequency

simple and straightforward. It requires only a block diagram of the receiver signal path and inputs of component specifications, such as gain, noise figure, and intermod intercept point. The program output not only generates important receiver performance characteristics, such as sensitivity, dynamic range, and spurious products, but also indicates which element limits receiver performance by generating the percentage of contribution by each component to the noise performance of a receiver.

This modeling program is of significance to the Air Force since it permits the following:

1. Aids subsystem definition and specification by determining performance characteristics of a particular receiver design affecting requirments for system maximum and minimum operating ranges.

2. Serves as an engineering tool for receiver proposal evaluation where it is necessary to determine whether sufficient information is provided to determine overall system performance. It can be used to determine whether the overall performance characteristics proposed satisfies requirements based on performance data of the functional blocks.

3. Serves as a systematic analysis tool for evaluating, testing, and designing valid and promising receiver approaches.

5.2 RECOMMENDATIONS: Experimental results as well as the experience gained during program evaluation, using the High Probability Intercept Receiver (HPIR) developed under contract F33615-74-C-1225, clearly indicate that although this receiver analysis program (RAP) is an effective tool, the following refinements in the program should be provided:

1. Provide and improve capability for evaluating the noise performance at channelized receivers in the fold mode by incorporating algorithms in the program which permit combining several parallel receiver front ends (each having its own bandwidth, gain, and noise figure) into a single output.

2. Incorporate a capability for predicting the receivers probability detection and false alarm rate depending on system configuration and signal-to-noise ratio.

REFERENCES

1. Skolnik, M. I., Introduction to Radar Systems, Chap. 8, McGraw-Hill Book Company, New York, 1962.

2. Chiedle, D. L., Thin-Film Cascadable Amplifiers, Watkins-Johnson Application Note, 100051-075A, August 1975.

3. Skolnik, M. I., Radar Handbook, Sec. 5.4, McGraw-Hill Book Company, New York, 1970.

4. Reference Data for Radio Engineers, Chap. 27 - 29, Howard W. Sam & Co., Inc., 1968.

APPENDIX A

DATA INPUT AND EDITING

A.1 INTRODUCTION

The purpose of this appendix is to demonstrate the capability of the receiver analysis program. Considerable flexibility is provided for editing input data as shown in the examples given below. Data can be corrected during input; however, addition or deletion of a functional block must be accomplished after all data are listed.

A.2 INPUT PROCEDURE AND EDITING NEW RECEIVER DATA FILE

The receiver used in the following example is shown in figure 1. Some incorrect data for blocks 2 and 5 are deliberately put into the system. When the computer lists all input data, the error in block 5 data (there is a loss in this block of -6 dB instead of a 6 dB gain) is noticed and corrected immediately. The error, however, in block 2 data is unnoticed although it will be corrected in example 2. A printout of the data entry procedure and results of the editing is given below. These results are saved on the tape for example 2.

```
--------
RECEIVER SIGNAL PATH PARAMETERS


INPUT:RECEIVER NUMBER(ANSWER INTEGER 1 TO 50)
?       5
PERFORM NOISE FIGURE COMPUTATIONS? (ANSWER YES OR NO)
?       YES
PERFORM INTERMOD COMPUTATIONS? (ANSWER YES OR NO)
?       YES
PERFORM DYNAMIC RANGE COMPUTATIONS? (ANSWER YES OR NO)
?       YES
PERFORM SPUR COMPUTATIONS? (ANSWER YES OR NO)
?       YES
HAS A FILE BEEN OPENED PREVIOUSLY FOR THE DATA FOR
THIS RECEIVER? (ANSWER YES OR NO)
?       NO
INPUT:NUMBER OF BLOCKS(INTEGER ANSWER: 1 TO 50)
?       24
ACCEPTABLE BLOCK TYPES: LINEAR, AMPLIFIER, MIXER
INPUT:TYPE,BLOCK  1
?       LIN
IS GAIN FIXED OR VARIABLE?
?       FIX
INPUT:GAIN(DB)
?       -1.5
INPUT 1DB COMPRESSION POINT(REFER TO INPUT LEVEL)
IF UNKNOWN ENTER 99.
?       99
ACCEPTABLE BLOCK TYPES: LINEAR, AMPLIFIER, MIXER
INPUT:TYPE,BLOCK  2
?       MIX
INPUT:MIXER GAIN(DB),OUTPUT BANDWIDTH(MHZ)
NOTE:GAIN(DB) IS NEGATIVE FOR CONVERSION LOSS
?       -6,1000.
INPUT DATA FOR SPUR COMPUTATIONS
 INPUT:  INPUT FREQUENCY BAND(2 VALUES)
         LOCAL OSCILLATOR FREQUENCY
         OUTPUT FREQUENCY BAND(2 VALUES)
ENTER 99. FOR UNKNOWN VALUES
?       9100,10400,1300,2600,3900
INPUT:INTERMOD INTERCEPTS(DBM):THIRD ORDER
NOTE:WRITE 99 FOR UNKNOWN INTERCEPT
?       99
INPUT 1DB COMPRESSION POINT(REFER TO INPUT LEVEL)
IF UNKNOWN ENTER 99.
?       99
ACCEPTABLE BLOCK TYPES: LINEAR, AMPLIFIER, MIXER
INPUT:TYPE,BLOCK  3
?       AMP
INPUT:GAIN(DB),NOISE FIGURE(DB)
?       24,8
```

```
INPUT:INTERMOD INTERCEPTS(DBM):THIRD ORDER
NOTE:WRITE 99 FOR UNKNOWN INTERCEPT
?       -4
INPUT 1DB COMPRESSION POINT(REFER TO INPUT LEVEL)
IF UNKNOWN ENTER 99.
?       -14
ACCEPTABLE BLOCK TYPES: LINEAR, AMPLIFIER, MIXER
INPUT:TYPE,BLOCK  4
?       LIN
IS GAIN FIXED OR VARIABLE?
?       FIX
INPUT:GAIN(DB)
?       -8.7
INPUT 1DB COMPRESSION POINT(REFER TO INPUT LEVEL)
IF UNKNOWN ENTER 99.
?       99
ACCEPTABLE BLOCK TYPES: LINEAR, AMPLIFIER, MIXER
INPUT:TYPE,BLOCK  5
?       MIX
INPUT:MIXER GAIN(DB),OUTPUT BANDWIDTH(MHZ)
NOTE:GAIN(DB) IS NEGATIVE FOR CONVERSION LOSS
?       6,10
INPUT DATA FOR SPUR COMPUTATIONS
 INPUT:  INPUT FREQUENCY BAND(2 VALUES)
         LOCAL OSCILLATOR FREQUENCY
         OUTPUT FREQUENCY BAND(2 VALUES)
ENTER 99. FOR UNKNOWN VALUES
?       2600,2762.5,3006.25,243.75,406.25
INPUT:INTERMOD INTERCEPTS(DBM):THIRD ORDER
NOTE:WRITE 99 FOR UNKNOWN INTERCEPT
?       99
INPUT 1DB COMPRESSION POINT(REFER TO INPUT LEVEL)
IF UNKNOWN ENTER 99.
?       99
ACCEPTABLE BLOCK TYPES: LINEAR, AMPLIFIER, MIXER
INPUT:TYPE,BLOCK  6
?       MF
UNACCEPTABLE ANSWER
ACCEPTABLE BLOCK TYPES: LINEAR, AMPLIFIER, MIXER
INPUT:TYPE,BLOCK  6
?       AMP
INPUT:GAIN(DB),NOISE FIGURE(DB)
?       21,6
INPUT:INTERMOD INTERCEPTS(DBM):THIRD ORDER
NOTE:WRITE 99 FOR UNKNOWN INTERCEPT
?       5
INPUT 1DB COMPRESSION POINT(REFER TO INPUT LEVEL)
IF UNKNOWN ENTER 99.
?       -5
ACCEPTABLE BLOCK TYPES: LINEAR, AMPLIFIER, MIXER
INPUT:TYPE,BLOCK  7
?       LIN
IS GAIN FIXED OR VARIABLE?
?       FIX
```

```
INPUT:GAIN(DB)
?       -3.3
INPUT 1DB COMPRESSION POINT(REFER TO INPUT LEVEL)
IF UNKNOWN ENTER 99.
?       99
ACCEPTABLE BLOCK TYPES: LINEAR, AMPLIFIER, MIXER
INPUT:TYPE,BLOCK  8
?       LIN
IS GAIN FIXED OR VARIABLE?
?       FIX
INPUT:GAIN(DB)
?       -9.3
INPUT 1DB COMPRESSION POINT(REFER TO INPUT LEVEL)
IF UNKNOWN ENTER 99.
?       99
ACCEPTABLE BLOCK TYPES: LINEAR, AMPLIFIER, MIXER
INPUT:TYPE,BLOCK  9
?       AMP
INPUT:GAIN(DB),NOISE FIGURE(DB)
?       20,8
INPUT:INTERMOD INTERCEPTS(DBN);THIRD ORDER
NOTE:WRITE 99 FOR UNKNOWN INTERCEPT
?       18
INPUT 1DB COMPRESSION POINT(REFER TO INPUT LEVEL)
IF UNKNOWN ENTER 99.
?       8
ACCEPTABLE BLOCK TYPES: LINEAR, AMPLIFIER, MIXER
INPUT:TYPE,BLOCK 10
?       LIN
IS GAIN FIXED OR VARIABLE?
?       FIX
INPUT:GAIN(DB)
?       -20
INPUT 1DB COMPRESSION POINT(REFER TO INPUT LEVEL)
IF UNKNOWN ENTER 99.
?       LIN
/
 ERROR-RETYPE RECORD BEGINNING WITH FIELD AT ARROW
ACCEPTABLE BLOCK TYPES: LINEAR, AMPLIFIER, MIXER
INPUT:TYPE,BLOCK 11
?       LIN
IS GAIN FIXED OR VARIABLE?
?       VAR
INPUT:MAXIMUM GAIN(DB),MINIMUM GAIN(DB)
?       0,-27
INPUT 1DB COMPRESSION POINT(REFER TO INPUT LEVEL)
IF UNKNOWN ENTER 99.
?       99
ACCEPTABLE BLOCK TYPES: LINEAR, AMPLIFIER, MIXER
INPUT:TYPE,BLOCK 12
?       AMP
INPUT:GAIN(DB),NOISE FIGURE(DB)
?       13.5,6
```

```
INPUT:INTERMOD INTERCEPTS(DBM);THIRD ORDER
NOTE:WRITE 99 FOR UNKNOWN INTERCEPT
?       8.5
INPUT 1DB COMPRESSION POINT(REFER TO INPUT LEVEL)
IF UNKNOWN ENTER 99.
?       -1.5
ACCEPTABLE BLOCK TYPES: LINEAR, AMPLIFIER, MIXER
INPUT:TYPE,BLOCK 13
?       LIN
IS GAIN FIXED OR VARIABLE?
?       FIX
INPUT:GAIN(DB)
?       -6
INPUT 1DB COMPRESSION POINT(REFER TO INPUT LEVEL)
IF UNKNOWN ENTER 99.
?       99
ACCEPTABLE BLOCK TYPES: LINEAR, AMPLIFIER, MIXER
INPUT:TYPE,BLOCK 14
?       AMP
INPUT:GAIN(DB),NOISE FIGURE(DB)
?       13.5
6
 INPUT:INTERMOD INTERCEPTS(DBM);THIRD ORDER
NOTE:WRITE 99 FOR UNKNOWN INTERCEPT
?       8.5
INPUT 1DB COMPRESSION POINT(REFER TO INPUT LEVEL)
IF UNKNOWN ENTER 99.
?       -1.5
ACCEPTABLE BLOCK TYPES: LINEAR, AMPLIFIER, MIXER
INPUT:TYPE,BLOCK 15
?       AMP
INPUT:GAIN(DB),NOISE FIGURE(DB)
?       13.5,6
INPUT:INTERMOD INTERCEPTS(DBM);THIRD ORDER
NOTE:WRITE 99 FOR UNKNOWN INTERCEPT
?       8.5
INPUT 1DB COMPRESSION POINT(REFER TO INPUT LEVEL)
IF UNKNOWN ENTER 99.
?       -1.5
ACCEPTABLE BLOCK TYPES: LINEAR, AMPLIFIER, MIXER
INPUT:TYPE,BLOCK 16
?       AMP
INPUT:GAIN(DB),NOISE FIGURE(DB)
?       10,10.5
INPUT:INTERMOD INTERCEPTS(DBM);THIRD ORDER
NOTE:WRITE 99 FOR UNKNOWN INTERCEPT
?       22
INPUT 1DB COMPRESSION POINT(REFER TO INPUT LEVEL)
IF UNKNOWN ENTER 99.
?       12
ACCEPTABLE BLOCK TYPES: LINEAR, AMPLIFIER, MIXER
INPUT:TYPE,BLOCK 17
?       AMP
```

```
INPUT:GAIN(DB),NOISE FIGURE(DB)
?       20,8
INPUT:INTERMOD INTERCEPTS(DBN);THIRD ORDER
NOTE:WRITE 99 FOR UNKNOWN INTERCEPT
?       18
INPUT 1DB COMPRESSION POINT(REFER TO INPUT LEVEL)
IF UNKNOWN ENTER 99.
?       8
ACCEPTABLE BLOCK TYPES: LINEAR, AMPLIFIER, MIXER
INPUT:TYPE,BLOCK 18
?       LIN
IS GAIN FIXED OR VARIABLE?
?       FIX
INPUT:GAIN(DB)
?       -16
INPUT 1DB COMPRESSION POINT(REFER TO INPUT LEVEL)
IF UNKNOWN ENTER 99.
?       99
ACCEPTABLE BLOCK TYPES: LINEAR, AMPLIFIER, MIXER
INPUT:TYPE,BLOCK 19
?       AMP
INPUT:GAIN(DB),NOISE FIGURE(DB)
?       13.5,6
INPUT:INTERMOD INTERCEPTS(DBN);THIRD ORDER
NOTE:WRITE 99 FOR UNKNOWN INTERCEPT
?       99
INPUT 1DB COMPRESSION POINT(REFER TO INPUT LEVEL)
IF UNKNOWN ENTER 99.
?       99
ACCEPTABLE BLOCK TYPES: LINEAR, AMPLIFIER, MIXER
INPUT:TYPE,BLOCK 20
?       LIN
IS GAIN FIXED OR VARIABLE?
?       FIX
INPUT:GAIN(DB)
?       -3
INPUT 1DB COMPRESSION POINT(REFER TO INPUT LEVEL)
IF UNKNOWN ENTER 99.
?       99
ACCEPTABLE BLOCK TYPES: LINEAR, AMPLIFIER, MIXER
INPUT:TYPE,BLOCK 21
?       AMP
INPUT:GAIN(DB),NOISE FIGURE(DB)
?       13.5,6
INPUT:INTERMOD INTERCEPTS(DBN);THIRD ORDER
NOTE:WRITE 99 FOR UNKNOWN INTERCEPT
?       99
INPUT 1DB COMPRESSION POINT(REFER TO INPUT LEVEL)
IF UNKNOWN ENTER 99.
?       99
ACCEPTABLE BLOCK TYPES: LINEAR, AMPLIFIER, MIXER
```

```
INPUT:TYPE,BLOCK 22
?       LIN
IS GAIN FIXED OR VARIABLE?
?       FIX
INPUT:GAIN(DB)
?       -2
INPUT 1DB COMPRESSION POINT(REFER TO INPUT LEVEL)
IF UNKNOWN ENTER 99.
?       99
ACCEPTABLE BLOCK TYPES: LINEAR, AMPLIFIER, MIXER
INPUT:TYPE,BLOCK 23
?       AMP
INPUT:GAIN(DB),NOISE FIGURE(DB)
?       13.5,6
INPUT:INTERMOD INTERCEPTS(DBM):THIRD ORDER
NOTE:WRITE 99 FOR UNKNOWN INTERCEPT
?       99
INPUT 1DB COMPRESSION POINT(REFER TO INPUT LEVEL)
IF UNKNOWN ENTER 99.
?       99
ACCEPTABLE BLOCK TYPES: LINEAR, AMPLIFIER, MIXER
INPUT:TYPE,BLOCK 24
?       LIN
IS GAIN FIXED OR VARIABLE?
?       FIX
INPUT:GAIN(DB)
?       -7.5
INPUT 1DB COMPRESSION POINT(REFER TO INPUT LEVEL)
IF UNKNOWN ENTER 99.
?       99
```

◆ ◆ ◆ ◆ ◆ ◆ ◆ ◆ ◆ ◆

DATA

	MAXIMUM GAIN		MINIMUM GAIN			
BLOCK	G	F	G	F	P3	BW
1	-1.5	1.5	-1.5	1.5	99.0	2000.000
2	-6.0	6.0	-6.0	6.0	99.0	1000.000
3	24.0	8.0	24.0	8.0	-4.0	2000.000
4	-8.7	8.7	-8.7	8.7	99.0	2000.000
5	6.0	6.0	6.0	6.0	99.0	10.000
6	21.0	6.0	21.0	6.0	5.0	2000.000
7	-3.3	3.3	-3.3	3.3	99.0	2000.000
8	-9.3	9.3	-9.3	9.3	99.0	2000.000
9	20.0	8.0	20.0	8.0	18.0	2000.000
10	-20.0	20.0	-20.0	20.0	99.0	2000.000
11	0.0	0.0	-27.0	27.0	99.0	2000.000
12	13.5	6.0	13.5	6.0	8.5	2000.000
13	-6.0	6.0	-6.0	6.0	99.0	2000.000
14	13.5	6.0	13.5	6.0	8.5	2000.000
15	13.5	6.0	13.5	6.0	8.5	2000.000
16	10.0	10.5	10.0	10.5	22.0	2000.000
17	20.0	8.0	20.0	8.0	18.0	2000.000
18	-16.0	16.0	-16.0	16.0	99.0	2000.000
19	13.5	6.0	13.5	6.0	99.0	2000.000
20	-3.0	3.0	-3.0	3.0	99.0	2000.000
21	13.5	6.0	13.5	6.0	99.0	2000.000
22	-2.0	2.0	-2.0	2.0	99.0	2000.000
23	13.5	6.0	13.5	6.0	99.0	2000.000
24	-7.5	7.5	-7.5	7.5	99.0	2000.000

I=BLOCK NUMBER
G=GAIN(DB),BLOCK I
F=NOISE FIGURE(DB),BLOCK I
NOTE:F=LOSS(DB) FOR AN ATTENUATOR
P3=THIRD ORDER INTERCEPTS(DBM),BLOCK I

```
 •    •    •    •    •    •    •    •    •    •
DATA
BLOCK        DECOM       FS1        FS2        FO        FI1        FI2
 1           99.0        0.0        0.0       0.0        0.0      0.000
 2           99.0     9100.0    10400.0    1300.0     2600.0   3900.000
 3          -14.0        0.0        0.0       0.0        0.0      0.000
 4           99.0        0.0        0.0       0.0        0.0      0.000
 5           99.0     2600.0     2762.5    3006.3      243.8    406.250
 6           -5.0        0.0        0.0       0.0        0.0      0.000
 7           99.0        0.0        0.0       0.0        0.0      0.000
 8           99.0        0.0        0.0       0.0        0.0      0.000
 9            8.0        0.0        0.0       0.0        0.0      0.000
10           99.0        0.0        0.0       0.0        0.0      0.000
11           99.0        0.0        0.0       0.0        0.0      0.000
12           -1.5        0.0        0.0       0.0        0.0      0.000
13           99.0        0.0        0.0       0.0        0.0      0.000
14           -1.5        0.0        0.0       0.0        0.0      0.000
15           -1.5        0.0        0.0       0.0        0.0      0.000
16           12.0        0.0        0.0       0.0        0.0      0.000
17            8.0        0.0        0.0       0.0        0.0      0.000
18           99.0        0.0        0.0       0.0        0.0      0.000
19           99.0        0.0        0.0       0.0        0.0      0.000
20           99.0        0.0        0.0       0.0        0.0      0.000
21           99.0        0.0        0.0       0.0        0.0      0.000
22           99.0        0.0        0.0       0.0        0.0      0.000
23           99.0        0.0        0.0       0.0        0.0      0.000
24           99.0        0.0        0.0       0.0        0.0      0.000
I=BLOCK NUMBER
DECOM=1 DB COMPRESSION POINT REFER TO INPUT FREQUENCY
FS1=LOWER LIMIT OF RF INPUT FREQUENCY
FS2=UPPER LIMIT OF RF INPUT FREQUENCY
FO=LOCAL OSCILLATOR FREQUENCY
FI1=LOWER LIMIT OF IF INPUT FREQUENCY
FI2=UPPER LIMIT OF IF INPUT FREQUENCY


IS DATA CORRECT? ANSWER YES OR NO
?       NO
INPUT TYPE OF CHANGE: ADD,CHG,DEL,OR END(TO STOP EDIT)
?       CHG
INPUT: BLOCK NUMBER
NOTE:FOR ADD ENTER PRECEDING BLOCK NUMBER
?       5
INPUT DATA COLUMNS(IN ORDER,12 VALUES)
NOTE:6TH VALUE IS SENSITIVITY(MIXER ONLY)
?       -6,6,-6,6,99,10,99,2600,2762.5,3006.25,243.75,406.25
INPUT TYPE OF CHANGE: ADD,CHG,DEL,OR END(TO STOP EDIT)
?       END
```

A.2.1. Printout After Data Correction

◆ ◆ ◆ ◆ ◆ ◆ ◆ ◆ ◆ ◆

DATA

BLOCK	MAXIMUM GAIN G	MAXIMUM GAIN F	MINIMUM GAIN G	MINIMUM GAIN F	P3	BW
1	-1.5	1.5	-1.5	1.5	99.0	2000.000
2	-6.0	6.0	-6.0	6.0	99.0	1000.000
3	24.0	8.0	24.0	8.0	-4.0	2000.000
4	-8.7	8.7	-8.7	8.7	99.0	2000.000
5	-6.0	6.0	-6.0	6.0	99.0	10.000
6	21.0	6.0	21.0	6.0	5.0	2000.000
7	-3.3	3.3	-3.3	3.3	99.0	2000.000
8	-9.3	9.3	-9.3	9.3	99.0	2000.000
9	20.0	8.0	20.0	8.0	18.0	2000.000
10	-20.0	20.0	-20.0	20.0	99.0	2000.000
11	0.0	0.0	-27.0	27.0	99.0	2000.000
12	13.5	6.0	13.5	6.0	8.5	2000.000
13	-6.0	6.0	-6.0	6.0	99.0	2000.000
14	13.5	6.0	13.5	6.0	8.5	2000.000
15	13.5	6.0	13.5	6.0	8.5	2000.000
16	10.0	10.5	10.0	10.5	22.0	2000.000
17	20.0	8.0	20.0	8.0	18.0	2000.000
18	-16.0	16.0	-16.0	16.0	99.0	2000.000
19	13.5	6.0	13.5	6.0	99.0	2000.000
20	-3.0	3.0	-3.0	3.0	99.0	2000.000
21	13.5	6.0	13.5	6.0	99.0	2000.000
22	-2.0	2.0	-2.0	2.0	99.0	2000.000
23	13.5	6.0	13.5	6.0	99.0	2000.000
24	-7.5	7.5	-7.5	7.5	99.0	2000.000

I=BLOCK NUMBER
G=GAIN(DB),BLOCK I
F=NOISE FIGURE(DB),BLOCK I
NOTE:F=LOSS(DB) FOR AN ATTENUATOR
P3=THIRD ORDER INTERCEPTS(DBM),BLOCK I

```
 *    *    *    *    *    *    *    *    *    *
DATA
BLOCK        DECOM       FS1        FS2        FO        FI1        FI2
 1           99.0        0.0        0.0        0.0        0.0      0.000
 2           99.0     9100.0    10400.0     1300.0     2600.0   3900.000
 3          -14.0        0.0        0.0        0.0        0.0      0.000
 4           99.0        0.0        0.0        0.0        0.0      0.000
 5           99.0     2600.0     2762.5     3006.3      243.8    406.250
 6           -5.0        0.0        0.0        0.0        0.0      0.000
 7           99.0        0.0        0.0        0.0        0.0      0.000
 8           99.0        0.0        0.0        0.0        0.0      0.000
 9            8.0        0.0        0.0        0.0        0.0      0.000
10           99.0        0.0        0.0        0.0        0.0      0.000
11           99.0        0.0        0.0        0.0        0.0      0.000
12           -1.5        0.0        0.0        0.0        0.0      0.000
13           99.0        0.0        0.0        0.0        0.0      0.000
14           -1.5        0.0        0.0        0.0        0.0      0.000
15           -1.5        0.0        0.0        0.0        0.0      0.000
16           12.0        0.0        0.0        0.0        0.0      0.000
17            8.0        0.0        0.0        0.0        0.0      0.000
18           99.0        0.0        0.0        0.0        0.0      0.000
19           99.0        0.0        0.0        0.0        0.0      0.000
20           99.0        0.0        0.0        0.0        0.0      0.000
21           99.0        0.0        0.0        0.0        0.0      0.000
22           99.0        0.0        0.0        0.0        0.0      0.000
23           99.0        0.0        0.0        0.0        0.0      0.000
24           99.0        0.0        0.0        0.0        0.0      0.000
I=BLOCK NUMBER
DECOM=1 DB COMPRESSION POINT REFER TO INPUT FREQUENCY
FS1=LOWER LIMIT OF RF INPUT FREQUENCY
FS2=UPPER LIMIT OF RF INPUT FREQUENCY
FO=LOCAL OSCILLATOR FREQUENCY
FI1=LOWER LIMIT OF IF INPUT FREQUENCY
FI2=UPPER LIMIT OF IF INPUT FREQUENCY


IS DATA CORRECT? ANSWER YES OR NO
?       YES
```

◆ ◆ ◆ ◆ ◆ ◆ ◆ ◆ ◆ ◆

NOISE FIGURE PERFORMANCE

	MAXIMUM GAIN					MINIMUM GAIN				
BLOCK	FTOT	FRAC	CUM	F(I)	SEN	FTOT	FRAC	CUM	F(I)	SEN
1	1.5	.036	.036	15.9	-88.1	1.5	.005	.005	24.2	-79.8
2	7.5	.108	.144	14.4	-89.6	7.5	.016	.021	22.7	-81.3
3	15.5	.763	.907	8.4	-95.6	15.5	.114	.135	16.7	-87.3
4	15.5	.004	.910	22.1	-81.9	15.5	.001	.136	40.1	-63.9
5	15.6	.013	.923	13.4	-90.6	15.6	.002	.138	31.4	-72.6
6	15.8	.050	.973	7.4	-96.6	15.8	.008	.145	25.4	-78.6
7	15.8	.000	.974	23.0	-81.0	15.8	.000	.145	46.3	-57.7
8	15.8	.002	.976	19.7	-84.3	15.8	.000	.146	43.0	-61.0
9	15.9	.013	.989	10.4	-93.6	15.9	.002	.147	33.7	-70.3
10	15.9	.002	.991	26.7	-77.3	15.9	.000	.148	53.7	-50.3
11	15.9	0.000	.991	6.7	-97.3	19.4	.182	.330	33.7	-70.3
12	15.9	.007	.998	6.7	-97.3	23.6	.544	.874	6.7	-97.3
13	15.9	.000	.999	12.2	-91.8	23.7	.024	.898	12.2	-91.8
14	15.9	.001	1.000	6.2	-97.8	24.2	.097	.995	6.2	-97.8
15	15.9	.000	1.000	6.5	-97.5	24.2	.004	.999	6.5	-97.5
16	15.9	.000	1.000	10.8	-93.2	24.2	.001	1.000	10.8	-93.2
17	15.9	.000	1.000	9.0	-95.0	24.2	.000	1.000	9.0	-95.0
18	15.9	.000	1.000	22.3	-81.7	24.2	.000	1.000	22.3	-81.7
19	15.9	.000	1.000	6.3	-97.7	24.2	.000	1.000	6.3	-97.7
20	15.9	.000	1.000	9.3	-94.7	24.2	.000	1.000	9.3	-94.7
21	15.9	.000	1.000	6.3	-97.7	24.2	.000	1.000	6.3	-97.7
22	15.9	.000	1.000	8.2	-95.8	24.2	.000	1.000	8.2	-95.8
23	15.9	.000	1.000	6.2	-97.8	24.2	.000	1.000	6.2	-97.8
24	15.9	.000	1.000	7.5	-96.5	24.2	.000	1.000	7.5	-96.5

I=BLOCK NUMBER
FTOT=NOISE FIGURE(DB),FIRST I BLOCKS
FRAC=RELATIVE NOISE CONTRIBUTION,BLOCK I
CUM=RELATIVE NOISE CONTRIBUTION, FIRST I BLOCKS
F(I)=NOISE FIGURE(DB) LOOKING INTO BLOCK I
SEN=SENSITIVITY(DBM) LOOKING INTO BLOCK I(S/M=0DB)

◆ ◆ ◆ ◆ ◆ ◆ ◆ ◆ ◆ ◆

THIRD ORDER INTERMOD PERFORMANCE

	MAXIMUN GAIN					MINIMUM GAIN				
BLOCK	P3TOT	FRAC	CUM	P3(I)	Q	P3TOT	FRAC	CUM	P3(I)	Q
1	99.0	0.000	0.000	-37.0	-54.1	99.0	0.000	0.000	-10.5	-33.6
2	99.0	0.000	0.000	-38.5	-55.6	99.0	0.000	0.000	-12.0	-35.1
3	3.5	.000	.000	-44.5	-61.6	3.5	.040	.040	-18.0	-41.1
4	3.5	0.000	.000	-20.5	-41.0	3.5	0.000	.040	6.2	-17.2
5	3.5	0.000	.000	-29.2	-49.7	3.5	0.000	.040	-2.5	-25.9
6	.3	.000	.000	-35.2	-55.7	.3	.043	.083	-8.5	-31.9
7	.3	0.000	.000	-14.2	-36.5	.3	0.000	.083	12.7	-10.8
8	.3	0.000	.000	-17.5	-39.8	.3	0.000	.083	9.4	-14.1
9	-.4	.000	.000	-26.8	-49.1	-.4	.015	.098	.1	-23.4
10	-.4	0.000	.000	-6.8	-30.3	-.4	0.000	.098	20.2	-3.3
11	-.4	0.000	.000	-26.8	-50.3	-.4	0.000	.098	.2	-23.3
12	-4.1	.000	.001	-26.8	-50.3	-.4	.000	.098	-26.8	-50.3
13	-4.1	0.000	.001	-13.3	-39.5	-.4	0.000	.098	-13.3	-39.5
14	-10.4	.002	.002	-19.3	-45.5	-.5	.001	.099	-19.3	-45.5
15	-22.9	.037	.039	-5.8	-36.4	-1.7	.033	.133	-5.8	-36.4
16	-25.8	.037	.076	7.8	-25.9	-2.7	.033	.166	7.8	-25.9
17	-37.0	.924	1.000	18.0	-19.7	-10.5	.834	1.000	18.0	-19.7
18	-37.0	0.000	1.000	79.5	25.8	-10.5	0.000	1.000	79.5	25.8
19	-37.0	0.000	1.000	63.5	9.8	-10.5	0.000	1.000	63.5	9.8
20	-37.0	0.000	1.000	77.0	19.8	-10.5	0.000	1.000	77.0	19.8
21	-37.0	0.000	1.000	74.0	16.8	-10.5	0.000	1.000	74.0	16.8
22	-37.0	0.000	1.000	87.5	26.4	-10.5	0.000	1.000	87.5	26.4
23	-37.0	0.000	1.000	85.5	24.4	-10.5	0.000	1.000	85.5	24.4
24	-37.0	0.000	1.000	99.0	33.8	-10.5	0.000	1.000	99.0	33.8

I=BLOCK NUMBER
P3TOT=THIRD ORDER INTERCEPT(DBM),FIRST I BLOCKS
FRAC=RELATIVE INTERMOD CONTRIBUTION,BLOCK I
CUM=RELATIVE INTERMOD CONTRIBUTION,FIRST I BLOCKS
P3(I)=THIRD ORDER INTERCEPT(DBM) LOOKING INTO BLOCK I
Q=TWO TONE SIGNAL POWER(DBM) INTO BLOCK I SUCH THAT THIRD
ORDER INTERMOD LEVEL EQUALS NOISE POWER LEVEL

◆ ◆ ◆ ◆ ◆ ◆ ◆ ◆ ◆ ◆

DYNAMIC RANGE COMPUTATION

	MAXIMUM GAIN					MINIMUM GAIN				
BLOCK	G	DECOM	DTOT	GTOT	D(I)	G	DECOM	DTOT	GTOT	D(I)
1	-1.5	99.0	99.0	-1.5	-46.7	-1.5	99.0	99.0	-1.5	-19.7
2	-6.0	99.0	99.0	-7.5	-48.2	-6.0	99.0	99.0	-7.5	-21.2
3	24.0	-14.0	-6.5	16.5	-54.2	24.0	-14.0	-6.5	16.5	-27.2
4	-8.7	99.0	-6.5	7.8	-30.2	-8.7	99.0	-6.5	7.8	-3.2
5	-6.0	99.0	-6.5	1.8	-38.9	-6.0	99.0	-6.5	1.8	-11.9
6	21.0	-5.0	-6.8	22.8	-44.9	21.0	-5.0	-6.8	22.8	-17.9
7	-3.3	99.0	-6.8	19.5	-23.9	-3.3	99.0	-6.8	19.5	3.1
8	-9.3	99.0	-6.8	10.2	-27.2	-9.3	99.0	-6.8	10.2	-.2
9	20.0	8.0	-6.8	30.2	-36.5	20.0	8.0	-6.8	30.2	-9.5
10	-20.0	99.0	-6.8	10.2	-16.5	-20.0	99.0	-6.8	10.2	10.5
11	0.0	99.0	-6.8	10.2	-36.5	-27.0	99.0	-6.8	-16.8	-9.5
12	13.5	-1.5	-11.7	23.7	-36.5	13.5	-1.5	-6.8	-3.3	-36.5
13	-6.0	99.0	-11.7	17.7	-23.0	-6.0	99.0	-6.8	-9.3	-23.0
14	13.5	-1.5	-19.2	31.2	-29.0	13.5	-1.5	-6.8	4.2	-29.0
15	13.5	-1.5	-32.7	44.7	-15.5	13.5	-1.5	-6.8	17.7	-15.5
16	10.0	12.0	-32.7	54.7	-2.0	10.0	12.0	-6.8	27.7	-2.0
17	20.0	8.0	-46.7	74.7	8.0	20.0	8.0	-19.7	47.7	8.0
18	-16.0	99.0	-46.7	58.7	79.5	-16.0	99.0	-19.7	31.7	79.5
19	13.5	99.0	-46.7	72.2	63.5	13.5	99.0	-19.7	45.2	63.5
20	-3.0	99.0	-46.7	69.2	77.0	-3.0	99.0	-19.7	42.2	77.0
21	13.5	99.0	-46.7	82.7	74.0	13.5	99.0	-19.7	55.7	74.0
22	-2.0	99.0	-46.7	80.7	87.5	-2.0	99.0	-19.7	53.7	87.5
23	13.5	99.0	-46.7	94.2	85.5	13.5	99.0	-19.7	67.2	85.5
24	-7.5	99.0	-46.7	86.7	99.0	-7.5	99.0	-19.7	59.7	99.0

I=BLOCK NUMBER
G=GAIN(DB), BLOCK I
DECOM=1 DB COMPRESSION POINT, BLOCK -
DTOT=1 DB COMPRESSION, FIRST I BLOCKS.
GTOT=TOTAL GAIN, FIRST I BLOCKS
D(I)]1 DB COMPRESSION, LOOKING INTO BLOCK I

```
 ◆    ◆    ◆    ◆    ◆    ◆    ◆    ◆    ◆    ◆

SPUR COMPUTATIONS
M =  1     N =  4     FSB=9100.00     BLOCK=  2
M =  1     N =  5     FSA=9100.00     BLOCK=  2
M =  1     N =  5     FSB=◆◆◆◆◆◆◆     BLOCK=  2
M =  1     N =  6     FSA=◆◆◆◆◆◆◆     BLOCK=  2


M =  1     N =  1     FSC=2762.50     BLOCK=  5
M =  1     N =  1     FSD=2600.00     BLOCK=  5


M,N=ORDER OF SPURS PRODUCED IN THE IF BAND
FSA=FREQUENCY AT WHICH MFS-NFO INTERCEPTS FI1
FSB=FREQUENCY AT WHICH MFS-NFO INTERCEPTS FI2
FSC=FREQUENCY AT WHICH MFO-NFS INTERCEPTS FI1
FSD=FREQUENCY AT WHICH MFO-NFS INTERCEPTS FI2


COMPUTATIONS COMPLETE.  DO YOU WISH TO CONTINUE?
TYPE YES OR NO
?      NO
DO YOU WISH TO SAVE THIS DATA?
TYPE YES OR NO
?      YES
DATA WRITTEN TO TAPE2----PLEASE COPY TO PERM FILE DEVICE AND
CATALOG FOR FUTURE USE
     STOP
      1.134 CP SECONDS EXECUTION TIME
COMMAND- CATALOG,TAPE2,TSUIDATA,RP=999
 NEWCYCLE CATALOG
 INCORRECT PERMISSION
 PF ABORT
COMMAND- CATALOG,TAPE2,SJJDATA,RP=999
 INITIAL CATALOG
 CT ID=  V740334 PFN=SJJDATA:
 CT CY= 001  00000320 WORDS.:
```

A.3. RECALL AND EDITING OF A PREVIOUS RECEIVER DATA FILE

This time the old data, saved on the tape, are listed on the printout for receiver no. 5. An additional block is inserted in the signal path after block 18 and the results are printed. Later, block 18 is deleted from the signal path. At this point, it is noticed that the local oscillator frequency (FO) listed for block 2 is in error. One can still change it and print the right results.

```
      3.402 CP SECONDS COMPILATION TIME
COMMAND- ATTACH,TAPE1,SJJDATA
 PF CYCLE NO. = 001
COMMAND- LGO
RECEIVER SIGNAL PATH PARAMETERS


INPUT:RECEIVER NUMBER(ANSWER INTEGER 1 TO 50)
?       5
PERFORM NOISE FIGURE COMPUTATIONS? (ANSWER YES OR NO)
?




YES
PERFORM INTERMOD COMPUTATIONS? (ANSWER YES OR NO)
?       YES
PERFORM DYNAMIC RANGE COMPUTATIONS? (ANSWER YES OR NO)
?       YES
PERFORM SPUR COMPUTATIONS? (ANSWER YES OR NO)
?       YES
HAS A FILE BEEN OPENED PREVIOUSLY FOR THE DATA FOR
THIS RECEIVER? (ANSWER YES OR NO)
?       YES
```

◆ ◆ ◆ ◆ ◆ ◆ ◆ ◆ ◆ ◆

DATA

	MAXIMUM GAIN		MINIMUM GAIN			
BLOCK	G	F	G	F	P3	BW
1	-1.5	1.5	-1.5	1.5	99.0	2000.000
2	-6.0	6.0	-6.0	6.0	99.0	1000.000
3	24.0	8.0	24.0	8.0	-4.0	2000.000
4	-8.7	8.7	-8.7	8.7	99.0	2000.000
5	-6.0	6.0	-6.0	6.0	99.0	10.000
6	21.0	6.0	21.0	6.0	5.0	2000.000
7	-3.3	3.3	-3.3	3.3	99.0	2000.000
8	-9.3	9.3	-9.3	9.3	99.0	2000.000
9	20.0	8.0	20.0	8.0	18.0	2000.000
10	-20.0	20.0	-20.0	20.0	99.0	2000.000
11	0.0	0.0	-27.0	27.0	99.0	2000.000
12	13.5	6.0	13.5	6.0	8.5	2000.000
13	-6.0	6.0	-6.0	6.0	99.0	2000.000
14	13.5	6.0	13.5	6.0	8.5	2000.000
15	13.5	6.0	13.5	6.0	8.5	2000.000
16	10.0	10.5	10.0	10.5	22.0	2000.000
17	20.0	8.0	20.0	8.0	18.0	2000.000
18	-16.0	16.0	-16.0	16.0	99.0	2000.000
19	13.5	6.0	13.5	6.0	99.0	2000.000
20	-3.0	3.0	-3.0	3.0	99.0	2000.000
21	13.5	6.0	13.5	6.0	99.0	2000.000
22	-2.0	2.0	-2.0	2.0	99.0	2000.000
23	13.5	6.0	13.5	6.0	99.0	2000.000
24	-7.5	7.5	-7.5	7.5	99.0	2000.000

I=BLOCK NUMBER
G=GAIN(DB),BLOCK I
F=NOISE FIGURE(DB),BLOCK I
NOTE:F=LOSS(DB) FOR AN ATTENUATOR
P3=THIRD ORDER INTERCEPTS(DBM),BLOCK I

```
 ◆    ◆    ◆    ◆    ◆    ◆    ◆    ◆    ◆    ◆
DATA
BLOCK        DECOM       FS1        FS2        FO        FI1        FI2
 1           99.0        0.0        0.0        0.0        0.0      0.000
 2           99.0     9100.0    10400.0     1300.0     2600.0   3900.000
 3          -14.0        0.0        0.0        0.0        0.0      0.000
 4           99.0        0.0        0.0        0.0        0.0      0.000
 5           99.0     2600.0     2762.5     3006.3      243.8    406.250
 6           -5.0        0.0        0.0        0.0        0.0      0.000
 7           99.0        0.0        0.0        0.0        0.0      0.000
 8           99.0        0.0        0.0        0.0        0.0      0.000
 9            8.0        0.0        0.0        0.0        0.0      0.000
10           99.0        0.0        0.0        0.0        0.0      0.000
11           99.0        0.0        0.0        0.0        0.0      0.000
12           -1.5        0.0        0.0        0.0        0.0      0.000
13           99.0        0.0        0.0        0.0        0.0      0.000
14           -1.5        0.0        0.0        0.0        0.0      0.000
15           -1.5        0.0        0.0        0.0        0.0      0.000
16           12.0        0.0        0.0        0.0        0.0      0.000
17            8.0        0.0        0.0        0.0        0.0      0.000
18           99.0        0.0        0.0        0.0        0.0      0.000
19           99.0        0.0        0.0        0.0        0.0      0.000
20           99.0        0.0        0.0        0.0        0.0      0.000
21           99.0        0.0        0.0        0.0        0.0      0.000
22           99.0        0.0        0.0        0.0        0.0      0.000
23           99.0        0.0        0.0        0.0        0.0      0.000
24           99.0        0.0        0.0        0.0        0.0      0.000
I=BLOCK NUMBER
DECOM=1 DB COMPRESSION POINT REFER TO INPUT FREQUENCY
FS1=LOWER LIMIT OF RF INPUT FREQUENCY
FS2=UPPER LIMIT OF RF INPUT FREQUENCY
FO=LOCAL OSCILLATOR FREQUENCY
FI1=LOWER LIMIT OF IF INPUT FREQUENCY
FI2=UPPER LIMIT OF IF INPUT FREQUENCY


IS DATA CORRECT? ANSWER YES OR NO
?       NO
INPUT TYPE OF CHANGE: ADD,CHG,DEL,OR END(TO STOP EDIT)
?       ADD
INPUT: BLOCK NUMBER
NOTE:FOR ADD ENTER PRECEDING BLOCK NUMBER
?       18
INPUT DATA COLUMNS(IN ORDER,12 VALUES)
NOTE:6TH VALUE IS SENSITIVITY(MIXER ONLY)
?       -6,6,-6,6,99,2000,99,0,0,0,0,0
INPUT TYPE OF CHANGE: ADD,CHG,DEL,OR END(TO STOP EDIT)
?       END
```

A.3.1. Printout After Adding One Block (See 19)

◆ ◆ ◆ ◆ ◆ ◆ ◆ ◆ ◆ ◆

DATA

	MAXIMUM GAIN		MINIMUM GAIN			
BLOCK	G	F	G	F	P3	BW
1	-1.5	1.5	-1.5	1.5	99.0	2000.000
2	-6.0	6.0	-6.0	6.0	99.0	1000.000
3	24.0	8.0	24.0	8.0	-4.0	2000.000
4	-8.7	8.7	-8.7	8.7	99.0	2000.000
5	-6.0	6.0	-6.0	6.0	99.0	10.000
6	21.0	6.0	21.0	6.0	5.0	2000.000
7	-3.3	3.3	-3.3	3.3	99.0	2000.000
8	-9.3	9.3	-9.3	9.3	99.0	2000.000
9	20.0	8.0	20.0	8.0	18.0	2000.000
10	-20.0	20.0	-20.0	20.0	99.0	2000.000
11	0.0	0.0	-27.0	27.0	99.0	2000.000
12	13.5	6.0	13.5	6.0	8.5	2000.000
13	-6.0	6.0	-6.0	6.0	99.0	2000.000
14	13.5	6.0	13.5	6.0	8.5	2000.000
15	13.5	6.0	13.5	6.0	8.5	2000.000
16	10.0	10.5	10.0	10.5	22.0	2000.000
17	20.0	8.0	20.0	8.0	18.0	2000.000
18	-16.0	16.0	-16.0	16.0	99.0	2000.000
19	-6.0	6.0	-6.0	6.0	99.0	2000.000
20	13.5	6.0	13.5	6.0	99.0	2000.000
21	-3.0	3.0	-3.0	3.0	99.0	2000.000
22	13.5	6.0	13.5	6.0	99.0	2000.000
23	-2.0	2.0	-2.0	2.0	99.0	2000.000
24	13.5	6.0	13.5	6.0	99.0	2000.000
25	-7.5	7.5	-7.5	7.5	99.0	2000.000

I=BLOCK NUMBER
G=GAIN(DB),BLOCK I
F=NOISE FIGURE(DB),BLOCK I
NOTE:F=LOSS(DB) FOR AN ATTENUATOR
P3=THIRD ORDER INTERCEPTS(DBM),BLOCK I

```
 *    *    *    *    *    *    *    *    *    *
DATA
BLOCK        DECOM       FS1        FS2        FO         FI1        FI2
 1           99.0        0.0        0.0        0.0        0.0       0.000
 2           99.0     9100.0    10400.0     1300.0     2600.0    3900.000
 3          -14.0        0.0        0.0        0.0        0.0       0.000
 4           99.0        0.0        0.0        0.0        0.0       0.000
 5           99.0     2600.0     2762.5     3006.3      243.8     406.250
 6           -5.0        0.0        0.0        0.0        0.0       0.000
 7           99.0        0.0        0.0        0.0        0.0       0.000
 8           99.0        0.0        0.0        0.0        0.0       0.000
 9            8.0        0.0        0.0        0.0        0.0       0.000
10           99.0        0.0        0.0        0.0        0.0       0.000
11           99.0        0.0        0.0        0.0        0.0       0.000
12           -1.5        0.0        0.0        0.0        0.0       0.000
13           99.0        0.0        0.0        0.0        0.0       0.000
14           -1.5        0.0        0.0        0.0        0.0       0.000
15           -1.5        0.0        0.0        0.0        0.0       0.000
16           12.0        0.0        0.0        0.0        0.0       0.000
17            8.0        0.0        0.0        0.0        0.0       0.000
18           99.0        0.0        0.0        0.0        0.0       0.000
19           99.0        0.0        0.0        0.0        0.0       0.000
20           99.0        0.0        0.0        0.0        0.0       0.000
21           99.0        0.0        0.0        0.0        0.0       0.000
22           99.0        0.0        0.0        0.0        0.0       0.000
23           99.0        0.0        0.0        0.0        0.0       0.000
24           99.0        0.0        0.0        0.0        0.0       0.000
25           99.0        0.0        0.0        0.0        0.0       0.000
I=BLOCK NUMBER
DECOM=1 DB COMPRESSION POINT REFER TO INPUT FREQUENCY
FS1=LOWER LIMIT OF RF INPUT FREQUENCY
FS2=UPPER LIMIT OF RF INPUT FREQUENCY
FO=LOCAL OSCILLATOR FREQUENCY
FI1=LOWER LIMIT OF IF INPUT FREQUENCY
FI2=UPPER LIMIT OF IF INPUT FREQUENCY


IS DATA CORRECT? ANSWER YES OR NO
?       YES
```

◆ ◆ ◆ ◆ ◆ ◆ ◆ ◆ ◆ ◆

NOISE FIGURE PERFORMANCE

	MAXIMUM GAIN					MINIMUM GAIN				
BLOCK	FTOT	FRAC	CUM	F(I)	SEN	FTOT	FRAC	CUM	F(I)	SEN
1	1.5	.036	.036	15.9	-88.1	1.5	.005	.005	24.2	-79.8
2	7.5	.108	.144	14.4	-89.6	7.5	.016	.021	22.7	-81.3
3	15.5	.763	.907	8.4	-95.6	15.5	.114	.135	16.7	-87.3
4	15.5	.004	.910	22.1	-81.9	15.5	.001	.136	40.1	-63.9
5	15.6	.013	.923	13.4	-90.6	15.6	.002	.138	31.4	-72.6
6	15.8	.050	.973	7.4	-96.6	15.8	.008	.145	25.4	-78.6
7	15.8	.000	.974	23.0	-81.0	15.8	.000	.145	46.3	-57.7
8	15.8	.002	.976	19.7	-84.3	15.8	.000	.146	43.0	-61.0
9	15.9	.013	.989	10.4	-93.6	15.9	.002	.147	33.7	-70.3
10	15.9	.002	.991	26.7	-77.3	15.9	.000	.148	53.7	-50.3
11	15.9	0.000	.991	6.7	-97.3	19.4	.182	.330	33.7	-70.3
12	15.9	.007	.998	6.7	-97.3	23.6	.544	.874	6.7	-97.3
13	15.9	.000	.999	12.2	-91.8	23.7	.024	.898	12.2	-91.8
14	15.9	.001	1.000	6.2	-97.8	24.2	.097	.995	6.2	-97.8
15	15.9	.000	1.000	6.5	-97.5	24.2	.004	.999	6.5	-97.5
16	15.9	.000	1.000	10.9	-93.1	24.2	.001	1.000	10.9	-93.1
17	15.9	.000	1.000	11.2	-92.8	24.2	.000	1.000	11.2	-92.8
18	15.9	.000	1.000	28.3	-75.7	24.2	.000	1.000	28.3	-75.7
19	15.9	.000	1.000	12.3	-91.7	24.2	.000	1.000	12.3	-91.7
20	15.9	.000	1.000	6.3	-97.7	24.2	.000	1.000	6.3	-97.7
21	15.9	.000	1.000	9.3	-94.7	24.2	.000	1.000	9.3	-94.7
22	15.9	.000	1.000	6.3	-97.7	24.2	.000	1.000	6.3	-97.7
23	15.9	.000	1.000	8.2	-95.8	24.2	.000	1.000	8.2	-95.8
24	15.9	.000	1.000	6.2	-97.8	24.2	.000	1.000	6.2	-97.8
25	15.9	.000	1.000	7.5	-96.5	24.2	.000	1.000	7.5	-96.5

I=BLOCK NUMBER
FTOT=NOISE FIGURE(DB),FIRST I BLOCKS
FRAC=RELATIVE NOISE CONTRIBUTION,BLOCK I
CUM=RELATIVE NOISE CONTRIBUTION, FIRST I BLOCKS
F(I)=NOISE FIGURE(DB) LOOKING INTO BLOCK I
SEN=SENSITIVITY(DBM) LOOKING INTO BLOCK I(S/M=0DB)

◆ ◆ ◆ ◆ ◆ ◆ ◆ ◆ ◆ ◆

THIRD ORDER INTERMOD PERFORMANCE

	MAXIMUM GAIN					MINIMUM GAIN				
BLOCK	P3TOT	FRAC	CUM	P3(I)	Q	P3TOT	FRAC	CUM	P3(I)	Q
1	99.0	0.000	0.000	-37.0	-54.1	99.0	0.000	0.000	-10.5	-33.6
2	99.0	0.000	0.000	-38.5	-55.6	99.0	0.000	0.000	-12.0	-35.1
3	3.5	.000	.000	-44.5	-61.6	3.5	.040	.040	-18.0	-41.1
4	3.5	0.000	.000	-20.5	-41.0	3.5	0.000	.040	6.2	-17.2
5	3.5	0.000	.000	-29.2	-49.7	3.5	0.000	.040	-2.5	-25.9
6	.3	.000	.000	-35.2	-55.7	.3	.043	.083	-8.5	-31.9
7	.3	0.000	.000	-14.2	-36.5	.3	0.000	.083	12.7	-10.8
8	.3	0.000	.000	-17.5	-39.8	.3	0.000	.083	9.4	-14.1
9	-.4	.000	.000	-26.8	-49.1	-.4	.015	.098	.1	-23.4
10	-.4	0.000	.000	-6.8	-30.3	-.4	0.000	.098	20.2	-3.3
11	-.4	0.000	.000	-26.8	-50.3	-.4	0.000	.098	.2	-23.3
12	-4.1	.000	.001	-26.8	-50.3	-.4	.000	.098	-26.8	-50.3
13	-4.1	0.000	.001	-13.3	-39.5	-.4	0.000	.098	-13.3	-39.5
14	-10.4	.002	.002	-19.3	-45.5	-.5	.001	.099	-19.3	-45.5
15	-22.9	.037	.039	-5.8	-36.4	-1.7	.033	.133	-5.8	-36.4
16	-25.8	.037	.076	7.8	-25.8	-2.7	.033	.166	7.8	-25.8
17	-37.0	.924	1.000	18.0	-18.9	-10.5	.834	1.000	18.0	-18.9
18	-37.0	0.000	1.000	85.5	31.8	-10.5	0.000	1.000	85.5	31.8
19	-37.0	0.000	1.000	69.5	15.8	-10.5	0.000	1.000	69.5	15.8
20	-37.0	0.000	1.000	63.5	9.8	-10.5	0.000	1.000	63.5	9.8
21	-37.0	0.000	1.000	77.0	19.8	-10.5	0.000	1.000	77.0	19.8
22	-37.0	0.000	1.000	74.0	16.8	-10.5	0.000	1.000	74.0	16.8
23	-37.0	0.000	1.000	87.5	26.4	-10.5	0.000	1.000	87.5	26.4
24	-37.0	0.000	1.000	85.5	24.4	-10.5	0.000	1.000	85.5	24.4
25	-37.0	0.000	1.000	99.0	33.8	-10.5	0.000	1.000	99.0	33.8

I=BLOCK NUMBER
P3TOT=THIRD ORDER INTERCEPT(DBM),FIRST I BLOCKS
FRAC=RELATIVE INTERMOD CONTRIBUTION,BLOCK I
CUM=RELATIVE INTERMOD CONTRIBUTION,FIRST I BLOCKS
P3(I)=THIRD ORDER INTERCEPT(DBM) LOOKING INTO BLOCK I
Q=TWO TONE SIGNAL POWER(DBM) INTO BLOCK I SUCH THAT THIRD
ORDER INTERMOD LEVEL EQUALS NOISE POWER LEVEL

◆ ◆ ◆ ◆ ◆ ◆ ◆ ◆ ◆ ◆

DYNAMIC RANGE COMPUTATION

	MAXIMUM GAIN					MINIMUM GAIN				
BLOCK	G	DECOM	DTOT	GTOT	D(I)	G	DECOM	DTOT	GTOT	D(I)
1	-1.5	99.0	99.0	-1.5	-46.7	-1.5	99.0	99.0	-1.5	-19.7
2	-6.0	99.0	99.0	-7.5	-48.2	-6.0	99.0	99.0	-7.5	-21.2
3	24.0	-14.0	-6.5	16.5	-54.2	24.0	-14.0	-6.5	16.5	-27.2
4	-8.7	99.0	-6.5	7.8	-30.2	-8.7	99.0	-6.5	7.8	-3.2
5	-6.0	99.0	-6.5	1.8	-38.9	-6.0	99.0	-6.5	1.8	-11.9
6	21.0	-5.0	-6.8	22.8	-44.9	21.0	-5.0	-6.8	22.8	-17.9
7	-3.3	99.0	-6.8	19.5	-23.9	-3.3	99.0	-6.8	19.5	3.1
8	-9.3	99.0	-6.8	10.2	-27.2	-9.3	99.0	-6.8	10.2	-.2
9	20.0	8.0	-6.8	30.2	-36.5	20.0	8.0	-6.8	30.2	-9.5
10	-20.0	99.0	-6.8	10.2	-16.5	-20.0	99.0	-6.8	10.2	10.5
11	0.0	99.0	-6.8	10.2	-36.5	-27.0	99.0	-6.8	-16.8	-9.5
12	13.5	-1.5	-11.7	23.7	-36.5	13.5	-1.5	-6.8	-3.3	-36.5
13	-6.0	99.0	-11.7	17.7	-23.0	-6.0	99.0	-6.8	-9.3	-23.0
14	13.5	-1.5	-19.2	31.2	-29.0	13.5	-1.5	-6.8	4.2	-29.0
15	13.5	-1.5	-32.7	44.7	-15.5	13.5	-1.5	-6.8	17.7	-15.5
16	10.0	12.0	-32.7	54.7	-2.0	10.0	12.0	-6.8	27.7	-2.0
17	20.0	8.0	-46.7	74.7	8.0	20.0	8.0	-19.7	47.7	8.0
18	-16.0	99.0	-46.7	58.7	85.5	-16.0	99.0	-19.7	31.7	85.5
19	-6.0	99.0	-46.7	52.7	69.5	-6.0	99.0	-19.7	25.7	69.5
20	13.5	99.0	-46.7	66.2	63.5	13.5	99.0	-19.7	39.2	63.5
21	-3.0	99.0	-46.7	63.2	77.0	-3.0	99.0	-19.7	36.2	77.0
22	13.5	99.0	-46.7	76.7	74.0	13.5	99.0	-19.7	49.7	74.0
23	-2.0	99.0	-46.7	74.7	87.5	-2.0	99.0	-19.7	47.7	87.5
24	13.5	99.0	-46.7	88.2	85.5	13.5	99.0	-19.7	61.2	85.5
25	-7.5	99.0	-46.7	80.7	99.0	-7.5	99.0	-19.7	53.7	99.0

I=BLOCK NUMBER
G=GAIN(DB), BLOCK I
DECOM=1 DB COMPRESSION POINT, BLOCK -
DTOT=1 DB COMPRESSION, FIRST I BLOCKS
GTOT=TOTAL GAIN, FIRST I BLOCKS
D(I)]1 DB COMPRESSION, LOOKING INTO BLOCK I

```
 ◆    ◆    ◆    ◆    ◆    ◆    ◆    ◆    ◆    ◆

SPUR COMPUTATIONS
M =  1     N =  4     FSB=          9100.00     BLOCK=  2
M =  1     N =  5     FSA=          9100.00     BLOCK=  2
M =  1     N =  5     FSB=         10400.00     BLOCK=  2
M =  1     N =  6     FSA=         10400.00     BLOCK=  2


M =  1     N =  1     FSC=          2762.50     BLOCK=  5
M =  1     N =  1     FSD=          2600.00     BLOCK=  5


M,N=ORDER OF SPURS PRODUCED IN THE IF BAND
FSA=FREQUENCY AT WHICH MFS-NFO INTERCEPTS FI1
FSB=FREQUENCY AT WHICH MFS-NFO INTERCEPTS FI2
FSC=FREQUENCY AT WHICH MFO-NFS INTERCEPTS FI1
FSD=FREQUENCY AT WHICH MFO-NFS INTERCEPTS FI2


COMPUTATIONS COMPLETE.  DO YOU WISH TO CONTINUE?
TYPE YES OR NO
?       YES
DO YOU WISH TO SAVE THIS DATA?
TYPE YES OR NO
?       NO
DO YOU WISH TO REEDIT CURRENT DATA
TYPE YES OR NO
?       YES
INPUT TYPE OF CHANGE: ADD,CHG,DEL,OR END(TO STOP EDIT)
?       DEL
INPUT: BLOCK NUMBER
NOTE:FOR ADD ENTER PRECEDING BLOCK NUMBER
?       18
THERE ARE NOW 24 BLOCKS
INPUT TYPE OF CHANGE: ADD,CHG,DEL,OR END(TO STOP EDIT)
?       END
```

◆ ◆ ◆ ◆ ◆ ◆ ◆ ◆ ◆ ◆

DATA

BLOCK	MAXIMUM GAIN G	MAXIMUM GAIN F	MINIMUM GAIN G	MINIMUM GAIN F	P3	BW
1	-1.5	1.5	-1.5	1.5	99.0	2000.000
2	-6.0	6.0	-6.0	6.0	99.0	1000.000
3	24.0	8.0	24.0	8.0	-4.0	2000.000
4	-8.7	8.7	-8.7	8.7	99.0	2000.000
5	-6.0	6.0	-6.0	6.0	99.0	10.000
6	21.0	6.0	21.0	6.0	5.0	2000.000
7	-3.3	3.3	-3.3	3.3	99.0	2000.000
8	-9.3	9.3	-9.3	9.3	99.0	2000.000
9	20.0	8.0	20.0	8.0	18.0	2000.000
10	-20.0	20.0	-20.0	20.0	99.0	2000.000
11	0.0	0.0	-27.0	27.0	99.0	2000.000
12	13.5	6.0	13.5	6.0	8.5	2000.000
13	-6.0	6.0	-6.0	6.0	99.0	2000.000
14	13.5	6.0	13.5	6.0	8.5	2000.000
15	13.5	6.0	13.5	6.0	8.5	2000.000
16	10.0	10.5	10.0	10.5	22.0	2000.000
17	20.0	8.0	20.0	8.0	18.0	2000.000
18	-6.0	6.0	-6.0	6.0	99.0	2000.000
19	13.5	6.0	13.5	6.0	99.0	2000.000
20	-3.0	3.0	-3.0	3.0	99.0	2000.000
21	13.5	6.0	13.5	6.0	99.0	2000.000
22	-2.0	2.0	-2.0	2.0	99.0	2000.000
23	13.5	6.0	13.5	6.0	99.0	2000.000
24	-7.5	7.5	-7.5	7.5	99.0	2000.000

I=BLOCK NUMBER
G=GAIN(DB),BLOCK I
F=NOISE FIGURE(DB),BLOCK I
NOTE:F=LOSS(DB) FOR AN ATTENUATOR
P3=THIRD ORDER INTERCEPTS(DBM),BLOCK I

```
 *    *    *    *    *    *    *    *    *    *
DATA
BLOCK        DECOM       FS1        FS2        FO         FI1        FI2
 1           99.0        0.0        0.0        0.0        0.0       0.000
 2           99.0     9100.0    10400.0     1300.0     2600.0    3900.000
 3          -14.0        0.0        0.0        0.0        0.0       0.000
 4           99.0        0.0        0.0        0.0        0.0       0.000
 5           99.0     2600.0     2762.5     3006.3      243.8     406.250
 6           -5.0        0.0        0.0        0.0        0.0       0.000
 7           99.0        0.0        0.0        0.0        0.0       0.000
 8           99.0        0.0        0.0        0.0        0.0       0.000
 9            8.0        0.0        0.0        0.0        0.0       0.000
10           99.0        0.0        0.0        0.0        0.0       0.000
11           99.0        0.0        0.0        0.0        0.0       0.000
12           -1.5        0.0        0.0        0.0        0.0       0.000
13           99.0        0.0        0.0        0.0        0.0       0.000
14           -1.5        0.0        0.0        0.0        0.0       0.000
15           -1.5        0.0        0.0        0.0        0.0       0.000
16           12.0        0.0        0.0        0.0        0.0       0.000
17            8.0        0.0        0.0        0.0        0.0       0.000
18           99.0        0.0        0.0        0.0        0.0       0.000
19           99.0        0.0        0.0        0.0        0.0       0.000
20           99.0        0.0        0.0        0.0        0.0       0.000
21           99.0        0.0        0.0        0.0        0.0       0.000
22           99.0        0.0        0.0        0.0        0.0       0.000
23           99.0        0.0        0.0        0.0        0.0       0.000
24           99.0        0.0        0.0        0.0        0.0       0.000
I=BLOCK NUMBER
DECOM=1 DB COMPRESSION POINT REFER TO INPUT FREQUENCY
FS1=LOWER LIMIT OF RF INPUT FREQUENCY
FS2=UPPER LIMIT OF RF INPUT FREQUENCY
FO=LOCAL OSCILLATOR FREQUENCY
FI1=LOWER LIMIT OF IF INPUT FREQUENCY
FI2=UPPER LIMIT OF IF INPUT FREQUENCY


IS DATA CORRECT? ANSWER YES OR NO
?       NO
INPUT TYPE OF CHANGE: ADD,CHG,DEL,OR END(TO STOP EDIT)
?       CHG
INPUT: BLOCK NUMBER
NOTE:FOR ADD ENTER PRECEDING BLOCK NUMBER
?       2
INPUT DATA COLUMNS(IN ORDER,12 VALUES)
NOTE:6TH VALUE IS SENSITIVITY(MIXER ONLY)
?       -6,6,-6,6,99,1000,99,9100,10400,13000,2600,3900
INPUT TYPE OF CHANGE: ADD,CHG,DEL,OR END(TO STOP EDIT)
?       END
```

◆ ◆ ◆ ◆ ◆ ◆ ◆ ◆ ◆ ◆

DATA

	MAXIMUM GAIN		MINIMUM GAIN			
BLOCK	G	F	G	F	P3	BW
1	-1.5	1.5	-1.5	1.5	99.0	2000.000
2	-6.0	6.0	-6.0	6.0	99.0	1000.000
3	24.0	8.0	24.0	8.0	-4.0	2000.000
4	-8.7	8.7	-8.7	8.7	99.0	2000.000
5	-6.0	6.0	-6.0	6.0	99.0	10.000
6	21.0	6.0	21.0	6.0	5.0	2000.000
7	-3.3	3.3	-3.3	3.3	99.0	2000.000
8	-9.3	9.3	-9.3	9.3	99.0	2000.000
9	20.0	8.0	20.0	8.0	18.0	2000.000
10	-20.0	20.0	-20.0	20.0	99.0	2000.000
11	0.0	0.0	-27.0	27.0	99.0	2000.000
12	13.5	6.0	13.5	6.0	8.5	2000.000
13	-6.0	6.0	-6.0	6.0	99.0	2000.000
14	13.5	6.0	13.5	6.0	8.5	2000.000
15	13.5	6.0	13.5	6.0	8.5	2000.000
16	10.0	10.5	10.0	10.5	22.0	2000.000
17	20.0	8.0	20.0	8.0	18.0	2000.000
18	-6.0	6.0	-6.0	6.0	99.0	2000.000
19	13.5	6.0	13.5	6.0	99.0	2000.000
20	-3.0	3.0	-3.0	3.0	99.0	2000.000
21	13.5	6.0	13.5	6.0	99.0	2000.000
22	-2.0	2.0	-2.0	2.0	99.0	2000.000
23	13.5	6.0	13.5	6.0	99.0	2000.000
24	-7.5	7.5	-7.5	7.5	99.0	2000.000

I=BLOCK NUMBER
G=GAIN(DB),BLOCK I
F=NOISE FIGURE(DB),BLOCK I
NOTE:F=LOSS(DB) FOR AN ATTENUATOR
P3=THIRD ORDER INTERCEPTS(DBM),BLOCK I

```
 *    *    *    *    *    *    *    *    *    *
DATA
BLOCK        DECOM       FS1        FS2        FO        FI1        FI2
 1           99.0        0.0        0.0        0.0       0.0       0.000
 2           99.0     9100.0    10400.0    13000.0    2600.0    3900.000
 3          -14.0        0.0        0.0        0.0       0.0       0.000
 4           99.0        0.0        0.0        0.0       0.0       0.000
 5           99.0     2600.0     2762.5     3006.3     243.8     406.250
 6           -5.0        0.0        0.0        0.0       0.0       0.000
 7           99.0        0.0        0.0        0.0       0.0       0.000
 8           99.0        0.0        0.0        0.0       0.0       0.000
 9            8.0        0.0        0.0        0.0       0.0       0.000
10           99.0        0.0        0.0        0.0       0.0       0.000
11           99.0        0.0        0.0        0.0       0.0       0.000
12           -1.5        0.0        0.0        0.0       0.0       0.000
13           99.0        0.0        0.0        0.0       0.0       0.000
14           -1.5        0.0        0.0        0.0       0.0       0.000
15           -1.5        0.0        0.0        0.0       0.0       0.000
16           12.0        0.0        0.0        0.0       0.0       0.000
17            8.0        0.0        0.0        0.0       0.0       0.000
18           99.0        0.0        0.0        0.0       0.0       0.000
19           99.0        0.0        0.0        0.0       0.0       0.000
20           99.0        0.0        0.0        0.0       0.0       0.000
21           99.0        0.0        0.0        0.0       0.0       0.000
22           99.0        0.0        0.0        0.0       0.0       0.000
23           99.0        0.0        0.0        0.0       0.0       0.000
24           99.0        0.0        0.0        0.0       0.0       0.000
I=BLOCK NUMBER
DECOM=1 DB COMPRESSION POINT REFER TO INPUT FREQUENCY
FS1=LOWER LIMIT OF RF INPUT FREQUENCY
FS2=UPPER LIMIT OF RF INPUT FREQUENCY
FO=LOCAL OSCILLATOR FREQUENCY
FI1=LOWER LIMIT OF IF INPUT FREQUENCY
FI2=UPPER LIMIT OF IF INPUT FREQUENCY


IS DATA CORRECT? ANSWER YES OR NO
?       YES
```

◆ ◆ ◆ ◆ ◆ ◆ ◆ ◆ ◆ ◆

NOISE FIGURE PERFORMANCE

	MAXIMUM GAIN					MINIMUM GAIN				
BLOCK	FTOT	FRAC	CUM	F(I)	SEN	FTOT	FRAC	CUM	F(I)	SEN
1	1.5	.036	.036	15.9	-88.1	1.5	.005	.005	24.2	-79.8
2	7.5	.108	.144	14.4	-89.6	7.5	.016	.021	22.7	-81.3
3	15.5	.763	.907	8.4	-95.6	15.5	.114	.135	16.7	-87.3
4	15.5	.004	.910	22.1	-81.9	15.5	.001	.136	40.1	-63.9
5	15.6	.013	.923	13.4	-90.6	15.6	.002	.138	31.4	-72.6
6	15.8	.050	.973	7.4	-96.6	15.8	.008	.145	25.4	-78.6
7	15.8	.000	.974	23.0	-81.0	15.8	.000	.145	46.3	-57.7
8	15.8	.002	.976	19.7	-84.3	15.8	.000	.146	43.0	-61.0
9	15.9	.013	.989	10.4	-93.6	15.9	.002	.147	33.7	-70.3
10	15.9	.002	.991	26.7	-77.3	15.9	.000	.148	53.7	-50.3
11	15.9	0.000	.991	6.7	-97.3	19.4	.182	.330	33.7	-70.3
12	15.9	.007	.998	6.7	-97.3	23.6	.544	.874	6.7	-97.3
13	15.9	.000	.999	12.2	-91.8	23.7	.024	.898	12.2	-91.8
14	15.9	.001	1.000	6.2	-97.8	24.2	.097	.995	6.2	-97.8
15	15.9	.000	1.000	6.5	-97.5	24.2	.004	.999	6.5	-97.5
16	15.9	.000	1.000	10.7	-93.3	24.2	.001	1.000	10.7	-93.3
17	15.9	.000	1.000	8.1	-95.9	24.2	.000	1.000	8.1	-95.9
18	15.9	.000	1.000	12.3	-91.7	24.2	.000	1.000	12.3	-91.7
19	15.9	.000	1.000	6.3	-97.7	24.2	.000	1.000	6.3	-97.7
20	15.9	.000	1.000	9.3	-94.7	24.2	.000	1.000	9.3	-94.7
21	15.9	.000	1.000	6.3	-97.7	24.2	.000	1.000	6.3	-97.7
22	15.9	.000	1.000	8.2	-95.8	24.2	.000	1.000	8.2	-95.8
23	15.9	.000	1.000	6.2	-97.8	24.2	.000	1.000	6.2	-97.8
24	15.9	.000	1.000	7.5	-96.5	24.2	.000	1.000	7.5	-96.5

I=BLOCK NUMBER
FTOT=NOISE FIGURE(DB),FIRST I BLOCKS
FRAC=RELATIVE NOISE CONTRIBUTION,BLOCK I
CUM=RELATIVE NOISE CONTRIBUTION, FIRST I BLOCKS
F(I)=NOISE FIGURE(DB) LOOKING INTO BLOCK I
SEN=SENSITIVITY(DBM) LOOKING INTO BLOCK I(S/M=0DB)

◆ ◆ ◆ ◆ ◆ ◆ ◆ ◆ ◆ ◆

THIRD ORDER INTERMOD PERFORMANCE

	MAXIMUM GAIN					MINIMUM GAIN				
BLOCK	P3TOT	FRAC	CUM	P3(I)	Q	P3TOT	FRAC	CUM	P3(I)	Q
1	99.0	0.000	0.000	-37.0	-54.1	99.0	0.000	0.000	-10.5	-33.6
2	99.0	0.000	0.000	-38.5	-55.6	99.0	0.000	0.000	-12.0	-35.1
3	3.5	.000	.000	-44.5	-61.6	3.5	.040	.040	-18.0	-41.1
4	3.5	0.000	.000	-20.5	-41.0	3.5	0.000	.040	6.2	-17.2
5	3.5	0.000	.000	-29.2	-49.7	3.5	0.000	.040	-2.5	-25.9
6	.3	.000	.000	-35.2	-55.7	.3	.043	.083	-8.5	-31.9
7	.3	0.000	.000	-14.2	-36.5	.3	0.000	.083	12.7	-10.8
8	.3	0.000	.000	-17.5	-39.8	.3	0.000	.083	9.4	-14.1
9	-.4	.000	.000	-26.8	-49.1	-.4	.015	.098	.1	-23.4
10	-.4	0.000	.000	-6.6	-30.3	-.4	0.000	.098	20.2	-3.3
11	-.4	0.000	.000	-26.8	-50.3	-.4	0.000	.098	.2	-23.3
12	-4.1	.000	.001	-26.8	-50.3	-.4	.000	.098	-26.8	-50.3
13	-4.1	0.000	.001	-13.3	-39.5	-.4	0.000	.098	-13.3	-39.5
14	-10.4	.002	.002	-19.3	-45.5	-.5	.001	.099	-19.3	-45.5
15	-22.9	.037	.039	-5.8	-36.4	-1.7	.033	.133	-5.8	-36.4
16	-25.8	.037	.076	7.8	-25.9	-2.7	.033	.166	7.8	-25.9
17	-37.0	.924	1.000	18.0	-20.0	-10.5	.834	1.000	18.0	-20.0
18	-37.0	0.000	1.000	69.5	15.8	-10.5	0.000	1.000	69.5	15.8
19	-37.0	0.000	1.000	63.5	9.8	-10.5	0.000	1.000	63.5	9.8
20	-37.0	0.000	1.000	77.0	19.8	-10.5	0.000	1.000	77.0	19.8
21	-37.0	0.000	1.000	74.0	16.8	-10.5	0.000	1.000	74.0	16.8
22	-37.0	0.000	1.000	87.5	26.4	-10.5	0.000	1.000	87.5	26.4
23	-37.0	0.000	1.000	85.5	24.4	-10.5	0.000	1.000	85.5	24.4
24	-37.0	0.000	1.000	99.0	33.8	-10.5	0.000	1.000	99.0	33.8

I=BLOCK NUMBER
P3TOT=THIRD ORDER INTERCEPT(DBM),FIRST I BLOCKS
FRAC=RELATIVE INTERMOD CONTRIBUTION,BLOCK I
CUM=RELATIVE INTERMOD CONTRIBUTION,FIRST I BLOCKS
P3(I)=THIRD ORDER INTERCEPT(DBM) LOOKING INTO BLOCK I
Q=TWO TONE SIGNAL POWER(DBM) INTO BLOCK I SUCH THAT THIRD
ORDER INTERMOD LEVEL EQUALS NOISE POWER LEVEL

◆ ◆ ◆ ◆ ◆ ◆ ◆ ◆ ◆ ◆

DYNAMIC RANGE COMPUTATION

	MAXIMUM GAIN					MINIMUM GAIN				
BLOCK	G	DECOM	DTOT	GTOT	D(I)	G	DECOM	DTOT	GTOT	D(I)
1	-1.5	99.0	99.0	-1.5	-46.7	-1.5	99.0	99.0	-1.5	-19.7
2	-6.0	99.0	99.0	-7.5	-48.2	-6.0	99.0	99.0	-7.5	-21.2
3	24.0	-14.0	-6.5	16.5	-54.2	24.0	-14.0	-6.5	16.5	-27.2
4	-8.7	99.0	-6.5	7.8	-30.2	-8.7	99.0	-6.5	7.8	-3.2
5	-6.0	99.0	-6.5	1.8	-38.9	-6.0	99.0	-6.5	1.8	-11.9
6	21.0	-5.0	-6.8	22.8	-44.9	21.0	-5.0	-6.8	22.8	-17.9
7	-3.3	99.0	-6.8	19.5	-23.9	-3.3	99.0	-6.8	19.5	3.1
8	-9.3	99.0	-6.8	10.2	-27.2	-9.3	99.0	-6.8	10.2	-.2
9	20.0	8.0	-6.8	30.2	-36.5	20.0	8.0	-6.8	30.2	-9.5
10	-20.0	99.0	-6.8	10.2	-16.5	-20.0	99.0	-6.8	10.2	10.5
11	0.0	99.0	-6.8	10.2	-36.5	-27.0	99.0	-6.8	-16.8	-9.5
12	13.5	-1.5	-11.7	23.7	-36.5	13.5	-1.5	-6.8	-3.3	-36.5
13	-6.0	99.0	-11.7	17.7	-23.0	-6.0	99.0	-6.8	-9.3	-23.0
14	13.5	-1.5	-19.2	31.2	-29.0	13.5	-1.5	-6.8	4.2	-29.0
15	13.5	-1.5	-32.7	44.7	-15.5	13.5	-1.5	-6.8	17.7	-15.5
16	10.0	12.0	-32.7	54.7	-2.0	10.0	12.0	-6.8	27.7	-2.0
17	20.0	8.0	-46.7	74.7	8.0	20.0	8.0	-19.7	47.7	8.0
18	-6.0	99.0	-46.7	68.7	69.5	-6.0	99.0	-19.7	41.7	69.5
19	13.5	99.0	-46.7	82.2	63.5	13.5	99.0	-19.7	55.2	63.5
20	-3.0	99.0	-46.7	79.2	77.0	-3.0	99.0	-19.7	52.2	77.0
21	13.5	99.0	-46.7	92.7	74.0	13.5	99.0	-19.7	65.7	74.0
22	-2.0	99.0	-46.7	90.7	87.5	-2.0	99.0	-19.7	63.7	87.5
23	13.5	99.0	-46.7	104.2	85.5	13.5	99.0	-19.7	77.2	85.5
24	-7.5	99.0	-46.7	96.7	99.0	-7.5	99.0	-19.7	69.7	99.0

I=BLOCK NUMBER
G=GAIN(DB), BLOCK I
DECOM=1 DB COMPRESSION POINT, BLOCK -
DTOT=1 DB COMPRESSION, FIRST I BLOCKS
GTOT=TOTAL GAIN, FIRST I BLOCKS
D(I)]1 DB COMPRESSION, LOOKING INTO BLOCK I

```
 ◆    ◆    ◆    ◆    ◆    ◆    ◆    ◆    ◆    ◆

SPUR COMPUTATIONS
M =  1    N =  1    FSC=        10400.00    BLOCK=  2
M =  1    N =  1    FSD=         9100.00    BLOCK=  2


M =  3    N =  2    FSA=         9533.33    BLOCK=  2
M =  3    N =  2    FSB=         9966.67    BLOCK=  2

M =  4    N =  3    FSA=        10400.00    BLOCK=  2
M =  4    N =  3    FSC=         9100.00    BLOCK=  2

M =  5    N =  4    FSC=         9880.00    BLOCK=  2
M =  5    N =  4    FSD=         9620.00    BLOCK=  2

M =  6    N =  4    FSA=         9100.00    BLOCK=  2
M =  6    N =  4    FSB=         9316.67    BLOCK=  2
M =  6    N =  5    FSC=        10400.00    BLOCK=  2
M =  6    N =  5    FSD=        10183.33    BLOCK=  2

M =  1    N =  1    FSC=         2762.50    BLOCK=  5
M =  1    N =  1    FSD=         2600.00    BLOCK=  5



M,N=ORDER OF SPURS PRODUCED IN THE IF BAND
FSA=FREQUENCY AT WHICH MFS-NFO INTERCEPTS FI1
FSB=FREQUENCY AT WHICH MFS-NFO INTERCEPTS FI2
FSC=FREQUENCY AT WHICH MFO-NFS INTERCEPTS FI1
FSD=FREQUENCY AT WHICH MFO-NFS INTERCEPTS FI2



COMPUTATIONS COMPLETE.  DO YOU WISH TO CONTINUE?
TYPE YES OR NO
?       YES
DO YOU WISH TO SAVE THIS DATA?
TYPE YES OR NO
?       NO
DO YOU WISH TO REEDIT CURRENT DATA
TYPE YES OR NO
?       NO
INPUT:RECEIVER NUMBER(ANSWER INTEGER 1 TO 50)
?       A

USER ABORT
COMMAND- LOGOUT,,,,
```

A.4. EFFECTS OF CHANNEL FOLDING ON RECEIVER PERFORMANCE

Here a receiver with the same signal path characteristics as receiver number 5 is used to demonstrate the effects of folding identical parallel channels into a single output on receiver performance. To simulate a receiver with two identical signal paths up to and including block 7, the user simply re-edits the input data by inserting a block after block 7. All input data columns for this fold block are zeros except column 12. An integer value indicating the number of parallel channels to be folded is typed in this column. The signal path is unchanged from block 8 through 24 (refer to figure 1). Note that the most significant changes are in the computed receiver noise figure and sensitivity performance.

```
        LGO
RECEIVER SIGNAL PATH PARAMETERS

INPUT:RECEIVER NUMBER(ANSWER INTEGER 1 TO 50)
?       1
PERFORM NOISE FIGURE COMPUTATIONS? (ANSWER YES OR NO)
?       YES
PERFORM INTERMOD COMPUTATIONS? (ANSWER YES OR NO)
?       Y
PERFORM DYNAMIC RANGE COMPUTATIONS? (ANSWER YES OR NO)
?       Y
PERFORM SPUR COMPUTATIONS? (ANSWER YES OR NO)
?       Y
HAS A FILE BEEN OPENED PREVIOUSLY FOR THE DATA FOR
THIS RECEIVER? (ANSWER YES OR NO)
?       Y
```

DATA

BLOCK	MAXIMUM GAIN G	MAXIMUM GAIN F	MINIMUM GAIN G	MINIMUM GAIN F	P3	BW
1	-1.5	1.5	-1.5	1.5	99.0	2000.000
2	-6.0	6.0	-6.0	6.0	99.0	1000.000
3	24.0	8.0	24.0	8.0	-4.0	2000.000
4	-8.7	8.7	-8.7	8.7	99.0	2000.000
5	-6.0	6.0	-6.0	6.0	99.0	10.000
6	21.0	6.0	21.0	6.0	5.0	2000.000
7	-3.3	3.3	-3.3	3.3	99.0	2000.000
8	-9.3	9.3	-9.3	9.3	99.0	2000.000
9	20.0	8.0	20.0	8.0	18.0	2000.000
10	-20.0	20.0	-20.0	20.0	99.0	2000.000
11	0.0	0.0	-27.0	27.0	99.0	2000.000
12	13.5	6.0	13.5	6.0	8.5	2000.000
13	-6.0	6.0	-6.0	6.0	99.0	2000.000
14	13.5	6.0	13.5	6.0	8.5	2000.000
15	13.5	6.0	13.5	6.0	3.5	2000.000
16	10.0	10.5	10.0	10.5	22.0	2000.000
17	20.0	8.0	20.0	8.0	18.0	2000.000
18	-16.0	16.0	-16.0	16.0	99.0	2000.000
19	13.5	6.0	13.5	6.0	99.0	2000.000
20	-3.0	3.0	-3.0	3.0	99.0	2000.000
21	13.5	6.0	13.5	6.0	99.0	2000.000
22	-2.0	2.0	-2.0	2.0	99.0	2000.000
23	13.5	6.0	13.5	6.0	99.0	2000.000
24	-7.5	7.5	-7.5	7.5	99.0	2000.000

I=BLOCK NUMBER
G=GAIN(DB),BLOCK I
F=NOISE FIGURE(DB),BLOCK I
NOTE:F=LOSS(DB) FOR AN ATTENUATOR
P3=THIRD ORDER INTERCEPTS(DBM),BLOCK I

* * * * * * * * * *

DATA BLOCK	DECOM	FS1	FS2	FO	FI1	FI2
1	99.0	-0.0	-0.0	-0.0	-0.0	-0.000
2	99.0	9100.0	10400.0	13000.0	2600.0	3900.000
3	-14.0	0.0	0.0	0.0	0.0	0.000
4	99.0	0.0	0.0	0.0	0.0	0.000
5	99.0	2600.0	2762.5	3006.3	243.8	406.250
6	-5.0	-0.0	-0.0	-0.0	-0.0	-0.000
7	99.0	-0.0	-0.0	-0.0	-0.0	-0.000
8	99.0	0.0	0.0	0.0	0.0	0.000
9	8.0	-0.0	-0.0	-0.0	-0.0	-0.000
10	99.0	-0.0	-0.0	-0.0	-0.0	-0.000
11	99.0	-0.0	-0.0	-0.0	-0.0	-0.000
12	-1.5	-0.0	-0.0	-0.0	-0.0	-0.000
13	99.0	-0.0	-0.0	-0.0	-0.0	-0.000
14	-1.5	-0.0	-0.0	-0.0	-0.0	-0.000
15	-1.5	-0.0	-0.0	-0.0	-0.0	-0.000
16	12.0	-0.0	-0.0	-0.0	-0.0	-0.000
17	8.0	-0.0	-0.0	-0.0	-0.0	-0.000
18	99.0	0.0	0.0	0.0	0.0	0.000
19	99.0	-0.0	-0.0	-0.0	-0.0	-0.000
20	99.0	0.0	0.0	0.0	0.0	0.000
21	99.0	-0.0	-0.0	-0.0	-0.0	-0.000
22	99.0	0.0	0.0	0.0	0.0	0.000
23	99.0	-0.0	-0.0	-0.0	-0.0	-0.000
24	99.0	0.0	0.0	0.0	0.0	0.000

I=BLOCK NUMBER
DECOM=1 DB COMPRESSION POINT REFER TO INPUT FREQUENCY
FS1=LOWER LIMIT OF RF INPUT FREQUENCY
FS2=UPPER LIMIT OF RF INPUT FREQUENCY
FO=LOCAL OSCILLATOR FREQUENCY
FI1=LOWER LIMIT OF IF INPUT FREQUENCY
FI2=UPPER LIMIT OF IF INPUT FREQUENCY

```
DO YOU WISH TO REEDIT CURRENT DATA
TYPE YES OR NO
?       Y
INPUT TYPE OF CHANGE: ADD,CHG,DEL,OR END(TO STOP EDIT)
?       A
INPUT: BLOCK NUMBER
NOTE:FOR ADD ENTER PRECEDING BLOCK NUMBER
?       7
INPUT DATA COLUMNS(IN ORDER,12 VALUES)
NOTE:6TH VALUE IS SENSITIVITY(MIXER ONLY)
?       0,0,0,0,0,0,0,0,0,0,0,2
INPUT TYPE OF CHANGE: ADD,CHG,DEL,OR END(TO STOP EDIT)
?       E

  *     *     *     *     *     *     *     *     *     *
DATA
```

	MAXIMUM GAIN		MINIMUM GAIN			
BLOCK	G	F	G	F	P3	BW
1	-1.5	1.5	-1.5	1.5	99.0	2000.000
2	-6.0	6.0	-6.0	6.0	99.0	1000.000
3	24.0	8.0	24.0	8.0	-4.0	2000.000
4	-8.7	8.7	-8.7	8.7	99.0	2000.000
5	-6.0	6.0	-6.0	6.0	99.0	10.000
6	21.0	6.0	21.0	6.0	5.0	2000.000
7	-3.3	3.3	-3.3	3.3	99.0	2000.000
8	0.0	0.0	0.0	0.0	99.0	2000.000
9	-9.3	9.3	-9.3	9.3	99.0	2000.000
10	20.0	8.0	20.0	8.0	18.0	2000.000
11	-20.0	20.0	-20.0	20.0	99.0	2000.000
12	0.0	0.0	-27.0	27.0	99.0	2000.000
13	13.5	6.0	13.5	6.0	8.5	2000.000
14	-6.0	6.0	-6.0	6.0	99.0	2000.000
15	13.5	6.0	13.5	6.0	8.5	2000.000
16	13.5	6.0	13.5	6.0	8.5	2000.000
17	10.0	10.5	10.0	10.5	22.0	2000.000
18	20.0	8.0	20.0	8.0	18.0	2000.000
19	-16.0	16.0	-16.0	16.0	99.0	2000.000
20	13.5	6.0	13.5	6.0	99.0	2000.000
21	-3.0	3.0	-3.0	3.0	99.0	2000.000
22	13.5	6.0	13.5	6.0	99.0	2000.000
23	-2.0	2.0	-2.0	2.0	99.0	2000.000
24	13.5	6.0	13.5	6.0	99.0	2000.000
25	-7.5	7.5	-7.5	7.5	99.0	2000.000

```
I=BLOCK NUMBER
G=GAIN(DB),BLOCK I
F=NOISE FIGURE(DB),BLOCK I
NOTE:F=LOSS(DB) FOR AN ATTENUATOR
P3=THIRD ORDER INTERCEPTS(DBM),BLOCK I
```

```
 *    *    *    *    *    *    *    *    *    *
DATA
BLOCK        DECOM       FS1        FS2        FO        FI1        FI2
 1           99.0       -0.0       -0.0      -0.0       -0.0     -0.000
 2           99.0     9100.0    10400.0   13000.0     2600.0   3900.000
 3          -14.0        0.0        0.0       0.0        0.0      0.000
 4           99.0        0.0        0.0       0.0        0.0      0.000
 5           99.0     2600.0     2762.5    3006.3      243.8    406.250
 6           -5.0       -0.0       -0.0      -0.0       -0.0     -0.000
 7           99.0       -0.0       -0.0      -0.0       -0.0     -0.000
 8           99.0        0.0        0.0       0.0        0.0      2.000
 9           99.0        0.0        0.0       0.0        0.0      0.000
10            8.0       -0.0       -0.0      -0.0       -0.0     -0.000
11           99.0       -0.0       -0.0      -0.0       -0.0     -0.000
12           99.0       -0.0       -0.0      -0.0       -0.0     -0.000
13           -1.5       -0.0       -0.0      -0.0       -0.0     -0.000
14           99.0       -0.0       -0.0      -0.0       -0.0     -0.000
15           -1.5       -0.0       -0.0      -0.0       -0.0     -0.000
16           -1.5       -0.0       -0.0      -0.0       -0.0     -0.000
17           12.0       -0.0       -0.0      -0.0       -0.0     -0.000
18            8.0       -0.0       -0.0      -0.0       -0.0     -0.000
19           99.0        0.0        0.0       0.0        0.0      0.000
20           99.0       -0.0       -0.0      -0.0       -0.0     -0.000
21           99.0        0.0        0.0       0.0        0.0      0.000
22           99.0       -0.0       -0.0      -0.0       -0.0     -0.000
23           99.0        0.0        0.0       0.0        0.0      0.000
24           99.0       -0.0       -0.0      -0.0       -0.0     -0.000
25           99.0        0.0        0.0       0.0        0.0      0.000
I=BLOCK NUMBER
DECOM=1 DB COMPRESSION POINT REFER TO INPUT FREQUENCY
FS1=LOWER LIMIT OF RF INPUT FREQUENCY
FS2=UPPER LIMIT OF RF INPUT FREQUENCY
FO=LOCAL OSCILLATOR FREQUENCY
FI1=LOWER LIMIT OF IF INPUT FREQUENCY
FI2=UPPER LIMIT OF IF INPUT FREQUENCY


IS DATA CORRECT? ANSWER YES OR NO
?       Y
```

* * * * * * * * * *

NOISE FIGURE PERFORMANCE

	MAXIMUM GAIN					MINIMUM GAIN				
BLOCK	FTOT	FRAC	CUM	F(I)	SEN	FTOT	FRAC	CUM	F(I)	SEN
1	1.5	.037	.037	18.9	-85.1	1.5	.009	.009	24.8	-79.2
2	7.5	.109	.146	17.4	-86.6	7.5	.028	.037	23.3	-80.7
3	15.5	.773	.919	11.4	-92.6	15.5	.199	.236	17.3	-86.7
4	15.5	.004	.923	24.5	-79.5	15.5	.001	.237	40.1	-63.9
5	15.6	.013	.935	15.8	-88.2	15.6	.003	.240	31.4	-72.6
6	15.8	.051	.986	9.8	-94.2	15.8	.013	.254	25.4	-78.6
7	15.8	.000	.987	23.0	-81.0	15.8	.000	.254	46.3	-57.7
8	18.8	0.000	.987	19.7	-84.3	18.8	0.000	.254	43.0	-61.0
9	18.8	.001	.988	19.7	-84.3	18.8	.000	.254	43.0	-61.0
10	18.9	.007	.994	10.4	-93.6	18.9	.002	.256	33.7	-70.3
11	18.9	.001	.995	26.7	-77.3	18.9	.000	.256	53.7	-50.3
12	18.9	0.000	.995	6.7	-97.3	21.0	.159	.415	33.7	-70.3
13	18.9	.004	.999	6.7	-97.3	24.3	.475	.890	6.7	-97.3
14	18.9	.000	.999	12.2	-91.8	24.4	.021	.911	12.2	-91.8
15	18.9	.001	1.000	6.2	-97.8	24.8	.084	.996	6.2	-97.8
16	18.9	.000	1.000	6.5	-97.5	24.8	.004	.999	6.5	-97.5
17	18.9	.000	1.000	10.8	-93.2	24.8	.001	1.000	10.8	-93.2
18	18.9	.000	1.000	9.0	-95.0	24.8	.000	1.000	9.0	-95.0
19	18.9	.000	1.000	22.3	-81.7	24.8	.000	1.000	22.3	-81.7
20	18.9	.000	1.000	6.3	-97.7	24.8	.000	1.000	6.3	-97.7
21	18.9	.000	1.000	9.3	-94.7	24.8	.000	1.000	9.3	-94.7
22	18.9	.000	1.000	6.3	-97.7	24.8	.000	1.000	6.3	-97.7
23	18.9	.000	1.000	8.2	-95.8	24.8	.000	1.000	8.2	-95.8
24	18.9	.000	1.000	6.2	-97.8	24.8	.000	1.000	6.2	-97.8
25	18.9	.000	1.000	7.5	-96.5	24.8	.000	1.000	7.5	-96.5

I =BLOCK NUMBER
FTOT=NOISE FIGURE(DB),FIRST I BLOCKS
FRAC=RELATIVE NOISE CONTRIBUTION,BLOCK I
CUM=RELATIVE NOISE CONTRIBUTION, FIRST I BLOCKS
F(I)=NOISE FIGURE(DB) LOOKING INTO BLOCK I
SEN=SENSITIVITY(DBM) LOOKING INTO BLOCK I(S/N=0DB)

* * * * * * * * * *

THIRD ORDER INTERMOD PERFORMANCE

	MAXIMUN GAIN					MINIMUM GAIN				
BLOCK	P3TOT	FRAC	CUM	P3(I)	Q	P3TOT	FRAC	CUM	P3(I)	Q
1	99.0	0.000	0.000	-37.0	-53.1	99.0	0.000	0.000	-10.5	-33.4
2	99.0	0.000	0.000	-38.5	-54.6	99.0	0.000	0.000	-12.0	-34.9
3	3.5	.000	.000	-44.5	-60.6	3.5	.040	.040	-18.0	-40.9
4	3.5	0.000	.000	-20.5	-40.2	3.5	0.000	.040	6.2	-17.2
5	3.5	0.000	.000	-29.2	-48.9	3.5	0.000	.040	-2.5	-25.9
6	.3	.000	.000	-35.2	-54.9	.3	.043	.083	-8.5	-31.9
7	.3	0.000	.000	-14.2	-36.5	.3	0.000	.083	12.7	-10.8
8	.3	0.000	.000	-17.5	-39.8	.3	0.000	.083	9.4	-14.1
9	.3	0.000	.000	-17.5	-39.8	.3	0.000	.083	9.4	-14.1
10	-.4	.000	.000	-26.8	-49.1	-.4	.015	.098	.1	-23.4
11	-.4	0.000	.000	-6.8	-30.3	-.4	0.000	.098	20.2	-3.3
12	-.4	0.000	.000	-26.8	-50.3	-.4	0.000	.098	.2	-23.3
13	-4.1	.000	.001	-26.8	-50.3	-.4	.000	.098	-26.8	-50.3
14	-4.1	0.000	.001	-13.3	-39.5	-.4	0.000	.098	-13.3	-39.5
15	-10.4	.002	.002	-19.3	-45.5	-.5	.001	.099	-19.3	-45.5
16	-22.9	.037	.039	-5.8	-36.4	-1.7	.033	.133	-5.8	-36.4
17	-25.8	.037	.076	7.8	-25.9	-2.7	.033	.166	7.8	-25.9
18	-37.0	.924	1.000	18.0	-19.7	-10.5	.834	1.000	18.0	-19.7
19	-37.0	0.000	1.000	79.5	25.8	-10.5	0.000	1.000	79.5	25.8
20	-37.0	0.000	1.000	63.5	9.8	-10.5	0.000	1.000	63.5	9.8
21	-37.0	0.000	1.000	77.0	19.8	-10.5	0.000	1.000	77.0	19.8
22	-37.0	0.000	1.000	74.0	16.8	-10.5	0.000	1.000	74.0	16.8
23	-37.0	0.000	1.000	87.5	26.4	-10.5	0.000	1.000	87.5	26.4
24	-37.0	0.000	1.000	85.5	24.4	-10.5	0.000	1.000	85.5	24.4
25	-37.0	0.000	1.000	99.0	33.8	-10.5	0.000	1.000	99.0	33.8

I=BLOCK NUMBER
P3TOT=THIRD ORDER INTERCEPT(DBM),FIRST I BLOCKS
FRAC=RELATIVE INTERMOD CONTRIBUTION,BLOCK I
CUM=RELATIVE INTERMOD CONTRIBUTION,FIRST I BLOCKS
P3(I)=THIRD ORDER INTERCEPT(DBM) LOOKING INTO BLOCK I
Q=TWO TONE SIGNAL POWER(DBM) INTO BLOCK I SUCH THAT THIRD ORDER INTERMOD LEVEL EQUALS NOISE POWER LEVEL

* * * * * * * * * *

DYNAMIC RANGE COMPUTATION

	MAXIMUM GAIN					MINIMUM GAIN				
BLOCK	G	DECOM	DTOT	GTOT	D(I)	G	DECOM	DTOT	GTOT	D(I)
1	-1.5	99.0	99.0	-1.5	-46.7	-1.5	99.0	99.0	-1.5	-19.7
2	-6.0	99.0	99.0	-7.5	-48.2	-6.0	99.0	99.0	-7.5	-21.2
3	24.0	-14.0	-6.5	16.5	-54.2	24.0	-14.0	-6.5	16.5	-27.2
4	-8.7	99.0	-6.5	7.8	-30.2	-8.7	99.0	-6.5	7.8	-3.2
5	-6.0	99.0	-6.5	1.8	-38.9	-6.0	99.0	-6.5	1.8	-11.9
6	21.0	-5.0	-6.8	22.8	-44.9	21.0	-5.0	-6.8	22.8	-17.9
7	-3.3	99.0	-6.8	19.5	-23.9	-3.3	99.0	-6.8	19.5	3.1
8	0.0	99.0	-6.8	19.5	-27.2	0.0	99.0	-6.8	19.5	-.2
9	-9.3	99.0	-6.8	10.2	-27.2	-9.3	99.0	-6.8	10.2	-.2
10	20.0	8.0	-6.8	30.2	-36.5	20.0	8.0	-6.8	30.2	-9.5
11	-20.0	99.0	-6.8	10.2	-16.5	-20.0	99.0	-6.8	10.2	10.5
12	0.0	99.0	-6.8	10.2	-36.5	-27.0	99.0	-6.8	-16.8	-9.5
13	13.5	-1.5	-11.7	23.7	-36.5	13.5	-1.5	-6.8	-3.3	-36.5
14	-6.0	99.0	-11.7	17.7	-23.0	-6.0	99.0	-6.8	-9.3	-23.0
15	13.5	-1.5	-19.2	31.2	-29.0	13.5	-1.5	-6.8	4.2	-29.0
16	13.5	-1.5	-32.7	44.7	-15.5	13.5	-1.5	-6.8	17.7	-15.5
17	10.0	12.0	-32.7	54.7	-2.0	10.0	12.0	-6.8	27.7	-2.0
18	20.0	8.0	-46.7	74.7	8.0	20.0	8.0	-19.7	47.7	8.0
19	-16.0	99.0	-46.7	58.7	79.5	-16.0	99.0	-19.7	31.7	79.5
20	13.5	99.0	-46.7	72.2	63.5	13.5	99.0	-19.7	45.2	63.5
21	-3.0	99.0	-46.7	69.2	77.0	-3.0	99.0	-19.7	42.2	77.0
22	13.5	99.0	-46.7	82.7	74.0	13.5	99.0	-19.7	55.7	74.0
23	-2.0	99.0	-46.7	80.7	87.5	-2.0	99.0	-19.7	53.7	87.5
24	13.5	99.0	-46.7	94.2	85.5	13.5	99.0	-19.7	67.2	85.5
25	-7.5	99.0	-46.7	86.7	99.0	-7.5	99.0	-19.7	59.7	99.0

I=BLOCK NUMBER
G=GAIN(DB), BLOCK I
DECOM=1 DB COMPRESSION POINT, BLOCK -
DTOT=1 DB COMPRESSION, FIRST I BLOCKS
GTOT=TOTAL GAIN, FIRST I BLOCKS
D(I)]1 DB COMPRESSION, LOOKING INTO BLOCK I

```
 *    *    *    *    *    *    *    *    *    *

SPUR COMPUTATIONS
M =  1     N =  1     FSC=        10400.00     BLOCK=  2
M =  1     N =  1     FSD=         9100.00     BLOCK=  2

M =  3     N =  2     FSA=         9533.33     BLOCK=  2
M =  3     N =  2     FSB=         9966.67     BLOCK=  2

M =  4     N =  3     FSA=        10400.00     BLOCK=  2
M =  4     N =  3     FSC=         9100.00     BLOCK=  2

M =  5     N =  4     FSC=         9880.00     BLOCK=  2
M =  5     N =  4     FSD=         9620.00     BLOCK=  2

M =  6     N =  4     FSA=         9100.00     BLOCK=  2
M =  6     N =  4     FSB=         9316.67     BLOCK=  2
M =  6     N =  5     FSC=        10400.00     BLOCK=  2
M =  6     N =  5     FSD=        10183.33     BLOCK=  2

M =  1     N =  1     FSC=         2762.50     BLOCK=  5
M =  1     N =  1     FSD=         2600.00     BLOCK=  5


M,N=ORDER OF SPURS PRODUCED IN THE IF BAND
FSA=FREQUENCY AT WHICH MFS-NFO INTERCEPTS FI1
FSB=FREQUENCY AT WHICH MFS-NFO INTERCEPTS FI2
FSC=FREQUENCY AT WHICH MFO-NFS INTERCEPTS FI1
FSD=FREQUENCY AT WHICH MFO-NFS INTERCEPTS FI2
```

```
COMPUTATIONS COMPLETE.  DO YOU WISH TO CONTINUE?
TYPE YES OR NO
?       N
DO YOU WISH TO SAVE THIS DATA?
TYPE YES OR NO
?       Y
DATA WRITTEN TO TAPE2----PLEASE COPY TO PERM FILE DEVICE AND
CATALOG FOR FUTURE USE
      STOP
       1.525 CP SECONDS EXECUTION TIME
COMMAND- REWIND TAPE 2
COMMAND- REQUEST X,*PF
COMMAND- COPY TAPE2,X
COMMAND- CATALOG X,TSUIDATA,RP=999
 INITIAL CATALOG
 CT ID=  V740265 PFN=TSUIDATA
 CT CY= 001  00000832 WORDS.:
COMMAND- REWIND TAPE2
COMMAND- BATCH,TAPE2,PUNCH
TYPE FILE ID-    C34
COMMAND- LOGOUT
CP TIME     9.149
PP TIME    23.505
CONNECT TIME    1 HRS. 13 MIN.
SRU'S USED      7.667
03/27/75  LOGGED OUT AT 10.42.27.<
```

APPENDIX B

COMPUTATION OF PERFORMANCE PARAMETERS

In this Appendix, all of the equations are listed for computing the receiver performance parameters listed in the tabulated program outputs.

To make the noise figure calculation, first transfer the input,

Fn(dB) and Gn(dB) into

$Fn=10^{(Fn(dB)/10)}$

$Gn=10^{(Gn(dB)/10)}$

$$FTOT(1) = 10 \log F1$$

$$FTOT(n) = 10 \log \left(\frac{Fn-1}{G_1G_2\ldots G_{n-1}}\right) \tag{B-1}$$

$$F_T = F_1 + \frac{F_2-1}{G_1} + \frac{F_3-1}{G_1G_2} + \frac{F_4-1}{G_1G_2G_3} + \ldots + \frac{F_n-1}{G_1G_2\ldots G_{N-1}}$$

$$FRAC(1) = \frac{F_1}{F_T}$$

$$FRAC(n) = \left(\frac{F_N-1}{G_1G_2\ldots F_{N-1}}\right)/F_T \tag{B-2}$$

$$CUM(n) = FRAC(1) + FRAC(2) + \ldots + FRAC(n)$$

$$F(I)(1) = 10 \log F_T$$

$$F(I)(2) = 10 \log \left(F_2 + \frac{F_3-1}{G_2} + \frac{F_4-1}{G_2G_3} - + \ldots\ldots + \frac{F_N-1}{F_2G_3\ldots G_{n-1}}\right)$$

$$F(I)(3) = 10 \log \left(F_3 + \frac{F_4-1}{G_3} + \ldots\ldots + \frac{F_N-1}{G_3G_4\ldots G_{n-1}}\right) \tag{B-3}$$

When a fold mode of m branches is typed in, the program will multiply the total noise in the signal path from the input to the fold block by m. Suppose the k + 1 block is the fold block, then multiply

$$\left(F_1 + \frac{F_2-1}{G_1} + \frac{F_3-1}{G_1G_2} + \ldots + \frac{F_k-1}{G_1\ldots G_{k-2}}\right)$$

by m for the noise figure calculation and the remainder of the calculations will be carried out as usual.

$$SEN(n) = -114 + F(I)(n) + 10 \log \left(\frac{BW(MHz)}{1MHz}\right) \qquad \text{(B-4)}$$

When calculating the third order intermodulation performance and dynamic range, the input is Pn(dB) where

$$Pn = 10^{\left(\frac{Pn(dB)}{10}\right)}$$

$$P_3TOT(1) = 10 \log P_1$$

$$P_3TOT(n) = 10 \log\left(\frac{Pn}{G_1G_2\ldots G_{N-1}}\right) \qquad \text{(B-5)}$$

$$\frac{1}{P_T} = \frac{1}{P_1} + \frac{G_1}{P_2} + \frac{G_1G_2}{P_3} + \ldots + \frac{G_1G_2\ldots G_N-1}{P_N}$$

$$FRAC(n) = \frac{\dfrac{Pn^3}{G_1G_2\ldots G_{n-1}}}{P_T} \qquad \text{(B-6)}$$

$$CUM(n) = FRAC(1) + FRAC(2) + \ldots + FRAC(n) \qquad \text{(B-7)}$$

$$P_3(I)(1) = 10 \log P_T$$

$$P_3(I)(2) = 10 \log\left(\frac{1}{P_2} + \frac{G_2}{P_3} + \ldots + \frac{G_2G_3\ldots G_{N-1}}{P_N}\right)$$

$$P_3(I)(3) = 10 \log\left(\frac{1}{\frac{1}{P_3} + \frac{G_3}{P_4} + \frac{G_3G_4}{P_5} + \ldots + \frac{G_3G_4\ldots G_{N-1}}{P_N}}\right) \qquad \text{(B-8)}$$

The power level of two equal amplitude signals which generate the intermod that equals the noise level is defined as

$$Q(n) = \frac{1}{3} SEN(n) + \frac{2}{3} P_3(I)(n). \qquad \text{(B-9)}$$

Note values for SEN, P3(I) and Q of Figure 2 and Block 1 data on the noise figure and intermod performance tables. The 1 dB compression point dynamic range calculations depend on the gain and 1 dB compression point of each stage where G_1(dB), G_2(dB), ...G_n(dB) is the gain of each stage and GC_1(dB), GC_2(dB), ...GC_n(dB) is the 1 dB compression point of each stage.

$DTOT(1) = GC_1(dB)$

$DTOT(2) = GC_2(dB)-G_1(dB)$. Compare DTOT(1) with DTOT(2) and select the smaller value for DTOT(2).

$$DTOT(3) - GC_3(dB)-G_2(dB)-G_1(dB) \quad \text{(B-10)}$$

Compare DTOT(2) with DTOT(3) and call the smaller value DTOT(3).

$$DTOT(n) = GCn(dB)-Gn-1(dB) - \ldots -G_1(dB) \quad \text{(B-11)}$$

Compare DTOT(n) with DTOT(n-1) and call the smaller one DTOT(n).

$$GTOT(n) = G_1(dB) + \ldots +Gn(dB) \quad \text{(B-12)}$$

$D(1) = DTOT(N)$

To obtain D(2)

$D(2) = GC_2(dB)$

$D(3) = GC_3(dB)-G_2(dB)$ compare with D(2) call the small one D(2).

$D(4) = GC_4(dB)-G_3(dB)-G_2(dB)$ compare with the new D(2) call the smaller one D(2).

$$D(N) = GC_N(dB)-G_{N-1}(dB)-G_{N-2}(dB)\ldots G_2(dB) \quad \text{(B-13)}$$

To obtain D(3)

$D(3) = GC_3(dB)$

$D(4) = GC_4(dB)$ compare with D(3) call the smaller one D(3).

$D(5) = GC_5(dB)-G_3(dB)$ compare with D(3) and call the smaller one D(3).

$D(N) = GC_N(dB)-G_{N-1}(dB)\ldots-G_3(dB)$ compare with D(3) and call the smaller one D(3).

B.1. Computation of Spurious Responses

In superheterodyne receivers, where a nonlinear element is used to get a desired intermediate frequency signal from the mixing of the incoming signal and a local oscillator (LO) signal, interference from spurious external signals results in a number of undesired frequencies that may fall within the intermediate frequency (IF) band. The standard defining equation[4] for determining the IF frequency is:

FI $\pm$MFS $\pm$NFO where

FO = local oscillator frequency

FI1 - lower limit of IF

FI2 = upper limit of IF

FS - signal frequency, FS1 and FS2 are the lower and upper limits of the RF input frequency band. M and N are positive integers representing harmonics of the signal and LO frequencies. When M and N = 1, MFS and NFO are the fundamental frequencies. When mixing for the different frequency in the IF, the equations are:

FI - MFS-NFO for FS greater than FO

FI = NFO-MFS for FS less than FO

To compute the spurious responses in the IF where FI1 and FI2 are the lower and upper limits of the IF band, the following equations are used.

$$FSA = \frac{FI1 + NFO}{M} \tag{B-14}$$

$$FSB = \frac{FI2 + NFO}{M} \tag{B-15}$$

$$FSC = \frac{NFO - FI1}{M} \tag{B-16}$$

$$FSD = \frac{NFO - FI2}{M} \tag{B-17}$$

The frequency ranges FSA to FSB and FSC to FSD represent the frequency regions in the input which generate spurs. Refer to figure 3 and the spur computations in Appendix A. In rare cases, when IF filtering is not used, the IF output bandwidth may be larger than the input. Under such conditions spurious responses will exist in the IF output which are not detected by equations 14 through 16. The following equations describe where these mixer-generated spurious responses exist in the IF output.

NFO-MFS2 = FSE

NFO-MFS2 = FSF for FO greater than FS

MFS1-NF = FSG

MFS2-NFO = FSH, for FS greater than FO

APPENDIX C

COMPUTER PROGRAM LISTING

```
      PROGRAM MACAIR(INPUT,OUTPUT,TAPE1,TAPE2)
      DIMENSION RCVD(50,5,10),GP(50)
C   DATA ARRAY RCVD(I,J,K)
C       I=BLOCK NUMBER
C       J=COLUMN OF DATA
C        K=COMPUTATIONS
C           K=1  INPUT DATA
C            K=2  INPUT CONVERSION
C            K=3  NOISE COMPUTATION (MAX)
C            K=4  NOISE COMPUTATION (MIN)
C            K=5  INTERMOD COMPUTATION (MAX)
C            K=6  INTERMOD COMPUTATION (MIN)
C            K=7   DYNAMIC AND SPUR INPUT DATA
C            K=8   DYNAMIC RANGE COMPUTATION(MAX)
C            K=9   DYNAMIC RANGE COMPUTATION(MIN)
C            K=10  AVAILABLE
C***********
C PROCEDURE
C***********
C OUTPUT HEADER
      PRINT 100
100   FORMAT(* RECEIVER SIGNAL PATH PARAMETERS*)
      PRINT 101
101   FORMAT(10Y)
      PRINT 101
C***********
C IDENTIFY RECEIVER
C***********
C     FOR BATCH PROCESSING RECEIVER NUMBER MUST BE GREATER THAN 50
1     PRINT 102
102   FORMAT(* INPUT:RECEIVER NUMBER(ANSWER INTEGER 1 TO 50)*/* ?*)
      READ *,NREC
      IF(NREC.GT.50)GO TO 8
C***********
C WHICH COMPUTATIONS TO BE PERFORMED
C***********
      NFLAG=0
      IFLAG=0
      IDFLAG=0
      ISFLAG=0
      PRINT 105
105   FORMAT(* PERFORM NOISE FIGURE COMPUTATIONS? (ANSWER YES OR NO)*
     1  /* ?*)
      READ 106,ANS
106   FORMAT(A1)
      IF(ANS.EQ.1HY)NFLAG=1
      PRINT 107
107   FORMAT(* PERFORM INTERMOD COMPUTATIONS? (ANSWER YES OR NO)*/* ?*)
      READ 106,ANS
      IF(ANS.EQ.1HY)IFLAG=1
      PRINT 130
130   FORMAT(* PERFORM DYNAMIC RANGE COMPUTATIONS? (ANSWER YES OR NO)*
     1/* ?*)
      READ 106,ANS
      IF(ANS.EQ.1HY)IDFLAG=1
      PRINT 131
131   FORMAT(* PERFORM SPUR COMPUTATIONS? (ANSWER YES OR NO)*/* ?*)
```

```
      READ 105,ANS
      IF(ANS.EQ.1HY)ISFLAG=1
C**********
C   WHERE TO OBTAIN DATA
C**********
      PRINT 108
108   FORMAT(* HAS A FILE BEEN OPENED PREVIOUSLY FOR THE DATA FOR*/
     1   * THIS RECEIVER? (ANSWER YES OR NO)*/* ?*)
      READ 105,ANS
      IF(ANS.EQ.1HY) GO TO 10
2     PRINT 109
109   FORMAT(* INPUT:NUMBER OF BLOCKS(INTEGER ANSWER: 1 TO 50)*/* ?*)
      READ *,NR
C***********
C  INPUT DATA BLOCKS
C**********
      DO 5 I=1,NR
3     PRINT 110,I
110   FORMAT(* ACCEPTABLE BLOCK TYPES: LINEAR, AMPLIFIER, MIXER, *
     1    *FOLD*/* INPUT: TYPE, BLOCK *,I2/* ?*)
      READ 105,ANS
      IF(ANS.EQ.1HL) GO TO 20
      IF(ANS.EQ.1HA) GO TO 30
      IF(ANS.EQ.1HM) GO TO 40
      IF(ANS.EQ.1HF)GO TO 45
50    PRINT 111
111   FORMAT(* UNACCEPTABLE ANSWER*)
      GO TO 3
C
C  LINEAR BLOCK
20    PRINT 112
112   FORMAT(* IS GAIN FIXED OR VARIABLE?*/* ?*)
      READ 105,ANS
      IF(ANS.EQ.1HF)GO TO 25
      IF(ANS.NE.1HV)GO TO 50
C
C   VARIABLE LINEAR
      PRINT 113
113   FORMAT(* INPUT:MAXIMUM GAIN(DB),MINIMUM GAIN(DB)*/* ?*)
      READ *,RCVD(I,1,1),RCVD(I,3,1)
      DO 6 LL=1,3,2
      IF(RCVD(I,LL,1).GE.0.)RCVD(I,LL+1,1)=RCVD(I,LL,1)
6     IF(RCVD(I,LL,1).LT.0.)RCVD(I,LL+1,1)=-RCVD(I,LL,1)
      GO TO 32
C
C    FIXED LINEAR
25    PRINT 114
114   FORMAT(* INPUT:GAIN(DB)*/* ?*)
      READ *,RCVD(I,1,1)
      RCVD(I,3,1)=RCVD(I,1,1)
      RCVD(I,2,1)=RCVD(I,1,1)
      IF(RCVD(I,2,1).LT.0)RCVD(I,2,1)=-RCVD(I,2,1)
      RCVD(I,4,1)=RCVD(I,2,1)
      GO TO 32
C
C  AMPLIFIER
30    PRINT 115
```

```
115   FORMAT(* INPUT:GAIN(DB),NOISE FIGURE(DB)*/* ?*)
      READ *,RCVD(I,1,1),RCVD(I,2,1)
      RCVD(I,3,1)=RCVD(I,1,1)
      RCVD(I,4,1)=RCVD(I,2,1)
31    PRINT 116
116   FORMAT(* INPUT:INTERMOD INTERCEPTS(DBM):THIRD ORDER*/
     1 * NOTE:WRITE 99 FOR UNKNOWN INTERCEPT*/* ?*)
      READ *,RCVD(I,5,1)
32    IF(IDFLAG.EQ.0)GO TO 5
      PRINT 132
132   FORMAT(* INPUT 1DB COMPRESSION POINT(REFER TO INPUT LEVEL)*/
     1  * IF UNKNOWN ENTER 99.*/* ?*)
      READ *,RCVD(I,1,7)
      GO TO 5
C
C MIXER
40    PRINT 117
117   FORMAT(* INPUT:MIXER GAIN(DB),OUTPUT BANDWIDTH(MHZ)*/
     1 * NOTE:GAIN(DB) IS NEGATIVE FOR CONVERSION LOSS*/* ?*)
      READ *,RCVD(I,1,1),RCVD(I,5,1)
      RCVD(I,3,1)=RCVD(I,1,1)
      RCVD(I,2,1)=RCVD(I,1,1)
      IF(RCVD(I,1,1).LT.0.)RCVD(I,2,1)=-RCVD(I,1,1)
      RCVD(I,4,1)=RCVD(I,2,1)
      IF(ISFLAG.EQ.0) GO TO 31
      PRINT 133
133   FORMAT(* INPUT DATA FOR SPUR COMPUTATIONS*/*  INPUT:  INPUT*
     1  * FREQUENCY BAND(2 VALUES)*/10X,*LOCAL OSCILLATOR FREQUENCY*
     2  /,10X,*OUTPUT FREQUENCY BAND(2 VALUES)*/,* ENTER 99. FOR *
     3  *UNKNOWN VALUES */* ?*)
      READ *,(RCVD(I,K,7),K=2,6)
      GO TO 31
5     CONTINUE
      GO TO 51
C
C     FOLD
45    PRINT *,"INPUT NUMBER OF CHANNEL PATHS"
      READ *,RCVD(I,6,7)
      DO 46 J=1,4
46    RCVD(I,J,1)=0.
      GO TO 5
51    DO 55 I=1,NR
      IF(RCVD(I,5,1).EQ.0.)RCVD(I,5,1)=99.
      IF(RCVD(I,1,7).EQ.0.)RCVD(I,1,7)=99.
55    IF(RCVD(I,5,1).EQ.0)RCVD(I,6,1)=2000.
C**********
C  PRINT DATA ARRAY
C**********
16    PRINT 118
118   FORMAT(/3X,10(1H*,4X)/* DATA*/14X,*MAXIMUM GAIN*,8X,
     1 *MINIMUM GAIN*//* BLOCK*2(9X,*G*,9X,*F*)9X*B3*7X*BW*)
      DO 7 I=1,NR
7     PRINT 119,I,(RCVD(I,J,1),J=1,5)
119   FORMAT(I3,4X,5F10.1,F10.3)
      PRINT 120
120   FORMAT(* I=BLOCK NUMBER*/* G=GAIN(DB),BLOCK I*/
     1* F=NOISE FIGURE(DB),BLOCK I*/* NOTE:F=LOSS(DB) FOR AN *
```

```
      2*ATTENUATOR*/
      3 * D3=THIRD ORDER INTERCEPTS(DBM),BLOCK I*////)
       PRINT 53
       DO 54 I=1,NR
 54    PRINT 119,I,(RCVD(I,J,7),J=1,5)
 53    FORMAT(/3X,10(1H*,4X),/,* DATA*/* BLOCK*,7X,*DECOM*,6X,*FS1*,
      1  7X,*FS2*,7X,*FO*,8X,*FI1*,7X,*FI2*)
       PRINT 140
 140   FORMAT(* I=BLOCK NUMBER*/
      1 * DECOM=1 DB COMPRESSION POINT REFER TO INPUT FREQUENCY*/
      2 * FS1=LOWER LIMIT OF RF INPUT FREQUENCY*/
      3 * FS2=UPPER LIMIT OF RF INPUT FREQUENCY*/
      4 * FO=LOCAL OSCILLATOR FREQUENCY*/
      5 * FI1=LOWER LIMIT OF IF INPUT FREQUENCY*/
      6 * FI2=UPPER LIMIT OF IF INPUT FREQUENCY*////)
       IF(NREC.GT.50)GO TO 200
       PRINT 121
 121   FORMAT(* IS DATA CORRECT? ANSWER YES OR NO*/* ?*)
       READ 105,ANS
       IF(ANS.EQ.1HY) GO TO 200
C**********
C  EDITING OF DATA
C**********
 15    PRINT 124
 124   FORMAT(* INPUT TYPE OF CHANGE: ADD,CHG,DEL,OR END(TO STOP *
      1 *EDIT)*/* ?*)
       READ 106,ANS
       IF(ANS.EQ.1HE)GO TO 51
       PRINT 1241
 1241  FORMAT(* INPUT: BLOCK NUMBER*/* NOTE:FOR ADD ENTER PRECEDING*
      1 * BLOCK NUMBER*/* ?*)
       READ *,NB
       IF(ANS.EQ.1HA)GO TO 60
       IF(ANS.EQ.1HC)GO TO 65
       IF(ANS.EQ.1HD)GO TO 68
       PRINT 111
       GO TO 15
C**********
C   INPUT DATA FROM PREVIOUS FILE
C**********
 8     NFLAG=IFLAG=IDFLAG=ISFLAG=1
 10    READ(1,92)NRD,NR
       IF(EOF(1))600,9
 92    FORMAT(2I2)
 9     CONTINUE
       READ(1,91)((RCVD(I,J,1),J=1,5),I=1,NR)
       READ(1,91)((RCVD(I,J,7),J=1,6),I=1,NR)
 91    FORMAT(5F10.1,F10.3)
       IF(NREC.GT.50) GO TO 51
       IF(NRD.EQ.NREC) GO TO 15
       PRINT 122,NREC,NRD
 122   FORMAT(* RECEIVER ID INPUT *I2* DOES NOT MATCH ID IN FILE*I2/
      1  * INPUT 'ABORT' OR 'CONTINUE'*/* ?*)
       READ 105,ANS
       IF(ANS.EQ.1HC)GO TO 15
       PRINT 123
 123   FORMAT(* NEW DATA MUST BE INPUT*)
```

```
      GO TO 2
C
C     ADD BLOCK
60     IF(NR.EQ.NR) GO TO 63
       INR=NR+1
61     DO 62 I=1,6
       RCVD(INR,I,7)=RCVD(INR-1,I,7)
62     RCVD(INR,I,1)=RCVD(INR-1,I,1)
       INR=INR-1
       IF(INR.GT.NB) GO TO 61
63     NR=NR+1
       NR=NR+1
C
C     CHANGE BLOCK
65     PRINT 125
125    FORMAT(* INPUT DATA COLUMNS(IN ORDER,12 VALUES)*/
      1 * NOTE:6TH VALUE IS SENSITIVITY(MIXER ONLY)*/* ?*)
       READ *,(RCVD(NB,I,1),I=1,5),(RCVD(NB,J,7),J=1,6)
       GO TO 15
C
C     DELETE BLOCK
68     NX=NR-1
       DO 69 I=NB,NX
       DO 69 J=1,6
       RCVD(I,J,7)=RCVD(I+1,J,7)
69     RCVD(I,J,1)=RCVD(I+1,J,1)
       NR=NX
       PRINT 126,NR
126    FORMAT(* THERE ARE NOW *I2* BLOCKS*)
       GO TO 15
C**********
C NOISE COMPUTATIONS
C**********
200    CONTINUE
       GP(1)=1.
       DO 201 I=1,NR
       DO 201 J=1,5
       RCVD(I,J,2)=10.**(RCVD(I,J,1)/10.)
       IF(J.EQ.1.AND.RCVD(I,J,1).EQ.99.)RCVD(I,J,2)=1.
       IF(J.EQ.3.AND.RCVD(I,J,1).EQ.99.)RCVD(I,J,2)=1.
       IF(J.EQ.2.AND.RCVD(I,J,1).EQ.99.)RCVD(I,J,2)=0.
       IF(J.EQ.4.AND.RCVD(I,J,1).EQ.99.)RCVD(I,J,2)=0.
201    CONTINUE
       K=3
       DO 215 M=1,3,2
       N=M+1
       DO 202 I=2,NR
202    GP(I)=GP(I-1)*RCVD(I-1,M,2)
C
C     FT COMPUTATION
       FT=RCVD(1,2,2)
       DO 203 I=2,NR
       IF(RCVD(I,2,7).EQ.0..AND.RCVD(I,6,7).NE.0.)FT=RCVD(I,6,7)*FT
203    FT=(RCVD(I,N,2)-1.)/GP(I)+FT
C
C  FTOT FPAC COMPUTATION
       RCVD(1,1,K)=RCVD(1,N,2)
```

```
      RCVD(1,2,K)=RCVD(1,1,K)/FT
      DO 204 I=2,NR
      RCVD(I,1,K)=(RCVD(I,N,2)-1.)/GP(I)
      RCVD(I,2,K)=RCVD(I,1,K)/FT
      IF(RCVD(I,2,7).EQ.0..AND.RCVD(I,6,7).NE.0.)GO TO 207
      RCVD(I,1,K)=RCVD(I,1,K)+RCVD(I-1,1,K)
      GO TO 204
207   RCVD(I,1,K)=RCVD(I,6,7)*RCVD(I-1,1,K)
      DO 209 NN=1,I
209   RCVD(NN,2,K)=RCVD(I,6,7)*RCVD(NN,2,K)
204   CONTINUE
C
C  SUMMATION OF FRAC
      RCVD(1,3,K)=RCVD(1,2,K)
      DO 205 I=2,NR
205   RCVD(I,3,K)=RCVD(I-1,3,K)+RCVD(I,2,K)
      I=NR-1
      FOLD=FFOLD=1.
      RCVD(NR,4,K)=RCVD(NR,N,2)
206   IF(I.EQ.0)GO TO 210
      RCVD(I,4,K)=(RCVD(I+1,4,K)-FFOLD)/RCVD(I,M,2)+RCVD(I,N,2)
     1 *FOLD
      IF(RCVD(I,2,7).EQ.0..AND.RCVD(I,6,7).NE.0.)FOLD=FOLD*RCVD(I,6,7)
      IF(RCVD(I+1,2,7).EQ.0..AND.RCVD(I+1,6,7).NE.0.)FFOLD=FFOLD*RCVD(I+
     11,6,7)
      I=I-1
      GO TO 206
210   CONTINUE
C
C   CONVERSION TO REAL NUM
      DO 211 I=1,NR
      DO 211 J=1,4,3
      IF(RCVD(I,J,K).EQ.0.)GO TO 211
      RCVD(I,J,K)=10.*ALOG10(RCVD(I,J,K))
211   CONTINUE
C
C   SENSITIVITY
      RCVD(1,6,2)=RCVD(1,5,1)
      DO 70 I=2,NR
70    RCVD(1,5,2)=AMIN1(RCVD(I,5,1),RCVD(1,6,2))
      X9W=10.*ALOG10(RCVD(1,6,2))
      DO 212 I=1,NR
212   RCVD(I,5,K)=-114.+RCVD(I,4,K)+X9W
      K=K+1
215   CONTINUE
C
C  PRINT NOISE FIGURES
      IF(NFLAG.EQ.0)GO TO 250
      PRINT 208
208   FORMAT(/3X,10(1H*,4X)/)
      PRINT 213
213   FORMAT(* NOISE FIGURE PERFORMANCE*/20X,*MAXIMUM GAIN*20X
     1 *MINIMUM GAIN*//* BLOCK *,2(*FTOT  FRAC   CUM    F(I)*
     2 3X,*SEN    *))
      DO 214 I=1,NR
      PRINT 216,I,(RCVD(I,J,7),J=1,5),(RCVD(I,K,4),K=1,5)
216   FORMAT(I3,2(F6.1,2F7.3,2F7.1))
```

```
214   CONTINUE
      PRINT 217
217   FORMAT(* I=BLOCK NUMBER*/* FTOT=NOISE FIGURE(DB),FIRST I BLOCKS*
     1 /* FRAC=RELATIVE NOISE CONTRIBUTION,BLOCK I*/
     2 * CUM=RELATIVE NOISE CONTRIBUTION, FIRST I BLOCKS*/
     3 * F(I)=NOISE FIGURE(DB) LOOKING INTO BLOCK I*/
     4 * SLN=SENSITIVITY(DBM) LOOKING INTO BLOCK I(S/N=0DB)*////)
250   IF(IFLAG.EQ.0.)GO TO 300
C**********
C     INTERMOD COMPUTATION
C**********
255   K=5
      DO 265 M=1,3,2
      DO 256 I=2,NR
256   GP(I)=GP(I-1)*RCVD(I-1,M,2)
C
C     PT COMPUTATION
      PT=0.
      DO 257 I=1,NR
      IF(RCVD(I,5,1).EQ.99.)GO TO 257
      PT=GP(I)/RCVD(I,5,2)+PT
257   CONTINUE
C
C     P3TOT FRAC COMPUTATION
      DO 258 I=1,NR
      RCVD(I,1,K)=GP(I)/RCVD(I,5,2)
      IF(RCVD(I,5,1).EQ.99.)RCVD(I,1,K)=0.
      RCVD(I,2,K)=RCVD(I,1,K)/PT
      RCVD(I,1,K)=RCVD(I,1,K)+RCVD(I-1,1,K)
258   CONTINUE
C
C     SUMMATION OF FRAC
      RCVD(1,3,K)=RCVD(1,2,K)
      DO 259 I=2,NR
259   RCVD(I,3,K)=RCVD(I-1,3,K)+RCVD(I,2,K)
      I=NR-1
C
C    COMPUTE P3(I)
      RCVD(NR,4,K)=1./RCVD(NR,5,2)
260   IF(I.EQ.0)GO TO 261
      RCVD(I,4,K)=RCVD(I+1,4,K)*RCVD(I,M,2)+1./RCVD(I,5,2)
      IF(RCVD(I,5,1).EQ.99.)RCVD(I,4,K)=RCVD(I+1,4,K)*RCVD(I,M,2)
      I=I-1
      GO TO 260
261   N=K-2
C
C    COMPUTE Q
      DO 262 I=1,NR
      DO 262 J=1,4,3
      IF(RCVD(I,J,K).EQ.0.)RCVD(I,J,K)=99.
      IF(RCVD(I,J,K).EQ.99.)GO TO 262
      RCVD(I,J,K)=10.*ALOG10(RCVD(I,J,K))
      RCVD(I,J,K)=-RCVD(I,J,K)
262   CONTINUE
      DO 263 I=1,NR
263   RCVD(I,5,K)=RCVD(I,5,N)/3.+2./3.*RCVD(I,4,K)
      IF(RCVD(I,4,K).EQ.99.)RCVD(I,5,K)=99.
```

```
      K=K+1
265   CONTINUE
C
C  PRINT INTERMOD FIGURES
      PRINT 208
      PRINT 266
266   FORMAT(* THIRD ORDER INTERMOD PERFORMANCE*/20X,*MAXIMUN GAIN*
     1  20X,*MINIMUM GAIN*//* BLOCK *,2(*P3TOT FRAC   CUM   P3(I)*
     2 *      Q   *))
      DO 267 I=1,NR
      PRINT 216,I,(RCVD(I,J,5),J=1,5),(RCVD(I,K,6),K=1,5)
267   CONTINUE
      PRINT 269
269   FORMAT(* I=BLOCK NUMBER*/* P3TOT=THIRD ORDER INTERCEPT(DBM),*
     1 *FIRST I BLOCKS*/* FRAC=RELATIVE INTERMOD CONTRIBUTION,BLOCK*
     2 * I*/* CUM=RELATIVE INTERMOD CONTRIBUTION,FIRST I BLOCKS*/
     3 * P3(I)=THIRD ORDER INTERCEPT(DBM) LOOKING INTO BLOCK I*/
     4* Q=TWO TONE SIGNAL POWER(DBM) INTO BLOCK I SUCH THAT THIRD *
     5 /*     ORDER INTERMOD LEVEL EQUALS NOISE POWER LEVEL*////)
C**********
C     DYNAMIC RANGE COMPUTATION
C**********
300   IF(IDFLAG.EQ.0)GO TO 400
      K=8
      DO 350 M=1,3,2
      DO 310 I=1,NR
      RCVD(I,1,K)=RCVD(I,M,1)
310   RCVD(I,2,K)=RCVD(I,1,7)
      RCVD(1,3,K)=RCVD(1,1,7)
      GG=0
      DO 315 I=2,NR
      GG=GG+RCVD(I-1,M,1)
      RCVD(I,3,K)=RCVD(I,2,K)-GG
      IF(RCVD(I,3,K) .GT.RCVD(I-1,3,K))RCVD(I,3,K)=RCVD(I-1,3,K)
315   CONTINUE
      RCVD(1,5,K)=RCVD(NR,3,K)
      J=NR-1
      DO 320 I=2,J
      GG=0
      RCVD(I,5,K)=RCVD(I,1,7)
      IT=I+1
      DO 318 N=IT,NR
      GG=GG+RCVD(N-1,M,1)
      RCVD(N,5,K)=RCVD(N,2,K)-GG
      IF(RCVD(I,5,K) .GT.RCVD(N,5,K))RCVD(I,5,K)=RCVD(N,5,K)
318   CONTINUE
320   CONTINUE
      RCVD(NR,5,K)=RCVD(NR,1,7)
      RCVD(1,4,K)=RCVD(1,1,K)
      DO 330 I=2,NR
330   RCVD(I,4,K)=RCVD(I-1,4,K)+RCVD(I,1,K)
      K=K+1
350   CONTINUE
      PRINT 208
      PRINT 360
360   FORMAT(/* DYNAMIC RANGE COMPUTATION*/20X,*MAXIMUM GAIN*,20X,
     1*MINIMUM GAIN*//* BLOCK *,2(*  G  DECOM  GTOT  GTOT  D(I)*5X))
```

```
      DO 370 I=1,NR
      PRINT 365,I,(RCVD(I,J,8),J=1,5),(RCVD(I,K,9),K=1,5)
365   FORMAT(I3,2X,2(5F6.1,3X))
370   CONTINUE
      PRINT 375
375   FORMAT(* I=BLOCK NUMBER*/* G=GAIN(DB), BLOCK I*/* DECOM=1 DB COMP
     1ESSION POINT, BLOCK -*/* DTOT=1 DB COMPRESSION, FIRST I BLOCKS*/*
     2GTOT=TOTAL GAIN, FIRST I BLOCKS*/* D(I)>1 DB COMPRESSION, LOOKING
     3INTO BLOCK I*////)
C**********
C   SPUR COMPUTATION
C**********
400   IF(ISFLAG.EQ.0) GO TO 500
      PRINT 208
      PRINT 410
410   FORMAT(* SPUR COMPUTATIONS*)
      DO 460 I=1,NR
      IF(RCVD(I,2,7).EQ.0) GO TO 450
      FS1=RCVD(I,2,7)-.001
      FS2=RCVD(I,3,7)+.001
      FO=RCVD(I,4,7)
      FI1=RCVD(I,5,7)-.001
      FI2=RCVD(I,6,7)+.001
      DO 455 M=1,6
      XM=M
      DO 450 N=1,6
      XN=N
      FSA=(FI1+XN*FO)/XM
      FSB=(FI2+XN*FO)/XM
      FSC=(XN*FO-FI1)/XM
      FSD=(XN*FO-FI2)/XM
      JSW=0
      IF(FSA.LT.FS1.OR.FSA.GT.FS2)GO TO 420
      PRINT 411,M,N,"FSA=",FSA,I
411   FORMAT(1X,*M =*,I3,4X,*N =*,I3,4X,A4,F16.2,4X,*BLOCK=*,I3)
      JSW=1
420   IF(FSB.LT.FS1.OR.FSB.GT.FS2)GO TO 430
      PRINT 411,M,N,"FSB=",FSB,I
      JSW=1
430   IF(FSC.LT.FS1.OR.FSC.GT.FS2)GO TO 440
      PRINT 411,M,N,"FSC=",FSC,I
      JSW=1
440   IF(FSD.LT.FS1.OR.FSD.GT.FS2)GO TO 445
      PRINT 411,M,N,"FSD=",FSD,I
      GO TO 450
  445 IF ((FS2-FS1).GE.(FI2-FI1)) GO TO 450
      IF(JSW.EQ.1) GO TO 450
      FSA=XM*FS1-XN*FO
      FSB=XM*FS2-XN*FO
      FSC=-FSA
      FSD=-FSB
      IF(FSA.LE.FI2.AND.FSA.GE.FI1) PRINT 411,M,N,"FSE=",FSA,I
      IF(FSB.LE.FI2.AND.FSB.GE.FI1) PRINT 411,M,N,"FSF=",FSB,I
      IF(FSC.LE.FI2.AND.FSC.GE.FI1) PRINT 411,M,N,"FSG=",FSC,I
      IF(FSD.LE.FI2.AND.FSD.GE.FI1) PRINT 411,M,N,"FSH=",FSD,I
450   CONTINUE
455   PRINT 101
```

```
460   CONTINUE
      PRINT 465
465   FORMAT(* M,N=ORDER OF SPURS PRODUCED IN THE IF BAND*/
     1* FSA=FREQUENCY AT WHICH MFS-NFO INTERCEPTS FI1*/
     2* FSB=FREQUENCY AT WHICH MFS-NFO INTERCEPTS FI2*/
     3* FSC=FREQUENCY AT WHICH NFO-MFS INTERCEPTS FI1*/
     4* FSD=FREQUENCY AT WHICH NFO-MFS INTERCEPTS FI2*/
     5* FSE=FREQUENCY AT WHICH MFS-NFO INTERCEPTS FS1*/
     6* FSF=FREQUENCY AT WHICH MFS-NFO INTERCEPTS FS2*/
     7* FSG=FREQUENCY AT WHICH NFO-MFS INTERCEPTS FS1*/
     8* FSH=FREQUENCY AT WHICH NFO-MFS INTERCEPTS FS2*////)
C**********
C   END PROGRAM PROCESSING
C**********
      IF(NREC.GT.50)GO TO 8
500   PRINT 501
501   FORMAT(* COMPUTATIONS COMPLETE.  DO YOU WISH TO CONTINUE?*,
     1 /* TYPE YES OR NO*/* ?*)
      READ 105,ANS
      PRINT 502
502   FORMAT(* DO YOU WISH TO SAVE THIS DATA?*/* TYPE YES OR NO*/* ?*)
      READ 105,ANS2
      IF(ANS2.EQ.1HY)WRITE(2,92)NREC,NR
      IF(ANS2.EQ.1HY)WRITE(2,91)((RCVD(I,J,1),J=1,6),I=1,NR)
      IF(ANS2.EQ.1HY)WRITE(2,91)((RCVD(I,J,7),J=1,6),I=1,NR)
      IF(ANS.EQ.1HY) GO TO 505
      IF(ANS2.EQ.1HY) PRINT 503
503   FORMAT(* DATA WRITTEN TO TAPE2----PLEASE COPY TO PERM FILE *
     1 *DEVICE AND */* CATALOG FOR FUTURE USE*)
      STOP
505   PRINT 504
504   FORMAT(* DO YOU WISH TO REEDIT CURRENT DATA*/* TYPE YES OR NO*/
     1 * ?*)
      READ 105,ANS
      IF(ANS.EQ.1HY) GO TO 15
      GO TO 1
600   STOP
      END
```


☆ U. S. GOVERNMENT PRINTING OFFICE: 1976 — 757-001/163