CR2005-187

DESIGN AND EVALUATION OF A NEW MEDICAL BAG

by:

D. Tack and P. Gaughan

Humansystems® Incorporated
111 Farquhar St., 2nd floor
Guelph, ON N1H 3N4

Project Manager:
David W. Tack
(519) 836 5911

PWGSC Contract No. W7711-9-7582/01/TOR
W7711-9-7709/01/TOR

On behalf of
DEPARTMENT OF NATIONAL DEFENCE

as represented by
Defence Research and Development Canada
1133 Sheppard Avenue West
North York, Ontario, Canada M3M 3B9

DRDC-Toronto Scientific Authorities

LCol. Linda Bossi
(416) 635-2197

Capt. Andrew Appleton
(416) 635-2148

17 May 2005

© HER MAJESTY THE QUEEN IN RIGHT OF CANADA (2005)
as represented by the Minister of National Defense

© SA MAJESTE LA REINE EN DROIT DU CANADA (2005)
Défense Nationale Canada

Abstract

Concerns have been raised that the 1950's design of the Airborne Pouch medical bag, currently employed in the Canadian Forces Medical Branch, is outdated and no longer suitable for the specialized equipment needs and roles of today's Med Techs, is incompatible with the integrated Clothe the Soldier (CTS) load carriage system, and has insufficient capacity. A program was undertaken to pursue the design of a replacement medical load carriage system that could integrate with the CTS load carriage system.

A needs analysis and a series of design iterations and testing with experienced Med Techs resulted in the design of a new prototype MedBag. The new prototype underwent a series of user acceptance trials. The results of these field trials confirmed the deficiencies with the Airborne Pouch and most Med Techs judged the Airborne Pouch to be unacceptable (86-89%). In contrast, the prototype MedBag was judged to be very acceptable by all Med Techs (100%). The MedBag was rated highly for comfort, pack weight, balance, and stability, packing and organizing contents, medical and most infantry tasks, compatibility with clothing and the tactical vest, and its appearance. Several minor design suggestions were also provided by Med Techs during focus group discussions. These suggestions were reviewed by the Medical Branch and a final MedBag design was confirmed.

Résumé

Certaines inquiétudes découlent du fait que le sac médical ou sac pour troupes aéroportées actuellement utilisé par les Services de santé des Forces canadiennes, dont la conception remonte aux années cinquante, est démodé et qu'il ne convient plus aux besoins en équipement spécialisé et aux rôles des Tech méd d'aujourd'hui, et qu'il est incompatible avec le système de transport de charge intégré du projet Habillez le soldat (HLS), et que sa capacité est insuffisante. Un programme a été mis sur pied afin de concevoir un système de transport de charge de matériel médical de remplacement qui pourrait s'intégrer au système de transport de charge du projet HLS.

Une analyse des besoins et une série de conceptions itératives et d'essais auprès de Tech méd expérimentés ont débouché sur la conception d'un nouveau prototype de sac médical, le MedBag. Le nouveau prototype a subi une série d'essais d'acceptation par l'utilisateur. Les résultats de ces essais pratiques ont confirmé les lacunes du sac médical plus ancien et la plupart des Tech méd ont jugé que ce sac était inacceptable (86 à 89 %). Par contre, le sac médical prototype a été jugé très acceptable par tous les Tech méd

(100 %). Le sac médical a été favorablement évalué relativement au confort, au poids, à l'équilibre et à la stabilité, au remplissage et à l'organisation du contenu, aux tâches médicales et à la plupart de celles de l'infanterie, à la compatibilité avec les vêtements et la veste tactique et à son apparence. Plusieurs suggestions mineures en matière de conception ont également été formulées par les Tech méd dans les groupes de discussion. Ces suggestions ont été examinées par les Services de santé et une conception finale du sac médical a été confirmée.

Executive Summary

Concerns have been raised that the 1950's design of the Airborne Pouch medical bag, currently employed in the Canadian Forces Medical Branch, is outdated and no longer suitable for the specialized equipment needs and roles of today's Med Techs, is incompatible with the integrated Clothe the Soldier (CTS) load carriage system, and has insufficient capacity. A program was undertaken to pursue the design of a replacement medical load carriage system that could integrate with the CTS load carriage system.

An initial needs analysis and design effort, that was constrained to a medical bag solution that could only be an add-on to the existing CTS load carriage items, was undertaken with Med Techs on course in CFB Borden. The design consisted of four separate medical pouches that could be added to the existing CTS small bag or rucksack according to mission requirements. The system also included a frame sheet with shoulder straps that enabled the pouches to be carried or worn as a separate system. This design was tested and validated in CFB Borden and several prototypes were developed for field testing. This medical bag design was tested with Med Techs from 3PPCLI in OP APOLLO in Afghanistan where much of the deployment was characterized by dismounted operations in mountainous terrain. While Med Techs found the medical pouches to be useful and effective for sick parade and local patrols, the design of a four-pouch system with a separate frame sheet carrier proved unsuccessful in longer range patrols and extended operations on foot, where Med Techs were required to carry a full CTS marching load in addition to the medical bag system.

In response to the shortcomings of the OP APOLLO medical bag a further design effort was carried out with Med Techs from 1Fd Amb in CFB Edmonton who could bring their OP APOLLO experience to bear on the problem. The initial constraint that the medical bag solution be an add-on item to the CTS load carriage system was discarded as impractical in favour of a single, separate, integrated medical bag solution that built on the best features of the OP APOLLO prototype. Three distinct single-bag prototype medical bags were designed with the support and assistance of 1Fd Amb. These designs were tested for load capacity and packing, usability under a range of simulated medical scenarios, load carriage performance, compatibility with clothing, equipment, and weapons, and fit acceptance among a range of Med Techs. From this design exercise a single medical bag prototype emerged with the most preferred features of the three distinct design prototypes.

The new prototype underwent a series of user acceptance trials. Med Techs from 1Fd Amb trialled the bag during their Casualty Care Course and during Exercise Seahawk while deployed with 3PPCLI in dismounted operations in Washington state. After having been judged a success in these preliminary trials, the prototype was deployed with 2Fd Amb to Afghanistan for OP ATHENA for six months of continous use in operations.

The results of these field trials confirmed the deficiencies with the Airborne Pouch, assumed at the outset of this program. Questionnaire responses by the Med Techs reported that the Airborne Pouch had significant shortcomings in the areas of fit, comfort, weight, bulk, size, and compatibility with other kit and the CTS load carriage system. Med Techs found that the Pouch had insufficient stowage capacity and the single open bag concept made organizing contents difficult and retrieving items under pressure challenging, especially in low light conditions. As well, it was difficult to keep the contents of the Pouch clean and many medical and infantry tasks

were made more difficult by its design. Most Med Techs judged the Airborne Pouch to be unacceptable (86-89%).

In contrast, the prototype MedBag was judged to be very acceptable by all Med Techs (100%). The MedBag was rated highly by Med Techs for comfort, pack weight, balance, and stability, packing and organizing contents, medical and most infantry tasks, compatibility with clothing and the tactical vest, and its appearance.

Some fit issues remain to be resolved. Med Techs reported that the choice of shoulder strap sizing, issued to each Med Tech, needed to take the additional torso bulk of wearing combats, fragvest, hard armour plates and the tactical vest into account. For the trial, shoulder straps were issued to Med Techs in combat clothing and some found the straps too small when wearing a full combat load. As well, shorter Med Techs reported that the Med Bag was too long for their torso length. In focus group discussions with all Med Techs it was determined that the capacity of the current prototype was sufficient to allow a shortening of the bag by about 5 cm without adversely affecting volume requirements. All Med Techs indicated that the Med Bag should include a quick-release mechanism for rapidly doffing the bag should they come under fire. The CTS quick-release system was suggested as a suitable solution.

Most Med Techs indicated that integrating the hydration system into the Med Bag was unnecessary and that the drinking tube cut-out and cover could be removed from the design. Shoulder straps and compression straps were identified as potential snagging hazards but most Med Techs recognized that this was somewhat inevitable in a highly adjustable and configurable bag. Some Med Techs suggested that a light nylon bag could be used to enclose the Med Bag when stowed in vehicles or for improving the airborne jump requirements for the bag. Several minor design suggestions were also provided during the focus group discussions. These suggestions were reviewed by the Medical Branch and a final MedBag design was confirmed.

In conclusion, the new prototype Med Bag has proven to be an effective, highly accepted replacement design for the in-service Airborne Pouch.

Sommaire

Certaines inquiétudes découlent du fait que le sac médical ou sac pour troupes aéroportées actuellement utilisé par les Services de santé des Forces canadiennes, dont la conception remonte aux années cinquante, est démodé et qu'il ne convient plus aux besoins en équipement spécialisé et aux rôles des Tech méd d'aujourd'hui, et qu'il est incompatible avec le système de transport de charge intégré du projet Habillez le soldat (HLS), et que sa capacité est insuffisante. Un programme a été mis sur pied afin de concevoir un système de transport de charge de matériel médical de remplacement qui pourrait s'intégrer au système de transport de charge du projet HLS.

Une analyse nitiale des besoins et un travail de conception, qui se limitait à un sac médical qui pourrait s'ajouter aux systèmes de transport de charge du projet HLS ont été entrepris avec les Tech méd qui suivaient des cours à la BFC Borden. Le modèle conçu comprenait quatre poches médicales séparées qui pouvaient être ajoutées au petit sac à dos ou au au sac à dos du HLS actuels selon les besoins de la mission. Le système comprenait également une feuille-cadre dotée de courroies d'épaules qui permettaient de transporter les poches ou de porter le tout comme un système séparé. Ce modèle a été mis à l'essai et validé à la BFC Borden et plusieurs prototypes ont été développés en vue d'essais pratiques. Ce modèle de sac médical a été mis à l'essai par des Tech méd du 3 PPCLI lors de l'Opération APOLLO en Afghanistan au cours de laquelle la plus grande partie du déploiement était caractérisée par des opérations démontées en terrain montagneux. Même si les Tech méd ont jugé que les poches médicales étaient utiles et efficaces lors la visite médicale et pendant les patrouilles locales, la conception d'un système comptant quatre poches doté d'un dispositif de transport comportant une feuille-cadre séparée s'est avérée un échec lors des patrouilles plus longues et pendant les opérations prolongées à pied, au cours desquelles les Tech méd devaient transporter une charge de marche complète au moyen du système de transport de charge du projet HLS en plus du système du sac médical.

En réponse aux faiblesses du sac médical de l'Opération APOLLO, un travail de conception a été effectué par les Tech méd de la 1 Amb C à la BFC Edmonton qui pouvaient utiliser l'expérience acquise pendant l'Opération APOLLO pour étudier le problème. L'inconvénient initial que présentait la solution du sac médical qui s'ajoutait au système de transport de charge du projet HLS a jugé peu pratique et rejeté en faveur d'une solution comportant un sac médical unique, séparé et intégré qui mettait à profit les meilleures caractéristiques du prototype de l'Opération APOLLO . Trois prototypes de sac médical unique distincts ont été conçus avec le soutien et l'aide de la 1 Amb C. Ces modèles ont été mis à l'essai relativement à la capacité de chargement et au remplissage, à l'utilisation dans une gamme de scénarios médicaux simulés, à la performance en matière de transport de charge, à la compatibilité avec les vêtements, l'équipement et les armes, et à l'essai d'ajustement pour un gamme de tailles probables de Tech méd. À partir de cet exercice de conception, un prototype de sac médical unique a été jugé comme présentant les meilleures caractéristiques parmi les trois prototypes distincts.

Le nouveau prototype a subi une série d'essais d'acceptation par l'utilisateur. Les Tech méd de la 1 Amb C ont fait l'essai du sac pendant leur cours sur les soins à apporter aux blessés et pendant l'exercice Seahawk lors de leur déploiement avec le 3 PPCLI en opérations démontées dans l'État de Washington. Après avoir réussi les essais préliminaires, le prototype a été déployé dans la 2 Amb C en Afghanistan lors de l'Opération ATHÉNA pendant six mois d'utilisation continue en opérations.

Les résultats de ces essais pratiques ont confirmé les faiblesses du sac pour troupes aéroportées dès le début du programme. Les réponses des Tech méd au questionnaire ont indiqué que le sac pour troupes aéroportées comportait des faiblesses considérables dans les domaines de l'ajustement, du confort, du poids, du volume, de la taille et de la compatibilité avec d'autres trousses et le système de transport de charge du HLS . Les Tech méd ont jugé que le sac pour troupes aéroportées possédait une capacité de rangement insuffisante et que le concept de sac à une seule ouverture rendait difficile l'organisation du contenu et compliquait la récupération des articles lorsque les militaires étaient sous pression, particulièrement en conditions de faible éclairage. En outre, il était difficile de garder propre le contenu du sac pour troupes aéroportés et sa conception rendaient plus difficiles plusieurs des tâches médicales et plusieurs tâches réservées à l'infanterie. La plupart des Tech méd ont jugé que le sac pour troupes aéroportées était inacceptable (86 à 89 %).

Par contraste, le sac médical prototype a été jugé très acceptable par tous les Tech méd (100 %). Le sac médical a été très bien coté par les Tech méd en matière de confort, de poids du sac, d'équilibre et de stabilité, de remplissage et d'organisation du contenu, pour ce qui est des tâches médicales et de la plupart de celles de l'infanterie, de la compatibilité avec les vêtements et avec la veste tactique, et de son apparence.

Certains problèmes d'ajustement restent à résoudre. Les Tech méd ont signalé que la dimension des courroies d'épaule, remises à chaque Tech méd, devait être suffisante pour tenir compte du volume additionnel du torse lié au port de la tenue de combat, de la veste pare-éclats, des plaques de blindage dures et de la veste tactique. Pour l'essai, des courroies d'épaule ont été distribuées aux Tech méd en tenue de combat et certains d'entre eux ont jugé les courroies trop petites lorsqu'ils portaient une charge de combat complète. Les Tech méd ont également signalé que le sac médical était trop long pour la longueur de leur torse . Dans des groupes de discussion formés de tous les Tech méd, il a été établi que la capacité du prototype actuel était suffisante pour permettre de raccourcir le sac d'environ 5 cm sans effets néfastes sur les exigences en matière de volume. Les Tech méd ont tous indiqué que le sac médical devrait comprendre un mécanisme de détachement rapide pour enlever rapidement le sac s'ils étaient soumis à des tirs. Le système de détachement rapide du projet HLS a été suggéré comme solution appropriée.

La plupart des Tech méd ont indiqué qu'il n'était pas nécessaire d'intégrer le système d'hydratation au sac médical et que l'ouverture pour le tube pour boire et son couvercle pourraient être éliminés du modèle. Il a été découvert que les courroies d'épaule et les courroies de compression constituaient des risques possibles d'accrochage, mais la plupart des Tech méd ont reconnu que c'était en quelque sorte inévitable pour un sac qui est très ajustable et très configurable. Certains Tech méd ont suggéré d'utiliser un sac en nylon léger pour entourer le sac médical lorsqu'il est rangé dans des véhicules ou pour améliorer la performance du sac lors des sauts. Plusieurs suggestions mineures en matière de conception ont également été apporté par les groupes de discussion. Ces suggestions ont été examinées par les Services médicaux et un modèle de sac médical final a été confirmé.

En conclusion, le nouveau prototype de sac médical s'est avéré un modèle de remplacement efficace et bien accueilli du sac pour troupes aéroportées en service.

Table of Contents

ABSTRACT ..... **I**

RÉSUMÉ ..... **II**

EXECUTIVE SUMMARY ..... **III**

SOMMAIRE ..... **V**

TABLE OF CONTENTS ..... **VII**

LIST OF FIGURES ..... **VIII**

1. INTRODUCTION **1**

1.1 BACKGROUND 1
1.1.2 Initial Prototype Development and Testing: *1*
1.1.2 Single-bag Prototype Development and Testing: *2*
1.2 AIM 3
1.3 MEDBAG 2003 DESCRIPTION 3

2. METHOD **5**

2.1 OVERVIEW 5
2.2 PARTICIPANTS 5
2.3 CONDITIONS 6
2.4 DATA COLLECTION 6
2.5 STATISTICAL ANALYSIS 7

3. RESULTS **8**

3.1 FIT AND ADJUSTMENT 8
3.2 WEIGHT/STABILITY/SIZE 9
3.3 PACKING 9
3.4 TASK PERFORMANCE 10
3.5 COMPATIBILITY 10
3.6 KIT INTEGRATION 10
3.7 OTHER 11
3.8 MODIFICATIONS 11
3.9 DESIGN DECISIONS 12

4. CONCLUSIONS **14**

List of Figures

Figure 1: Medical Bag 3
Figure 2: Back Panel 3
Figure 3: Bag Interior 4
Figure 4: Airway Bag Tether 4
Figure 5: Interior Stowed 4
Figure 6: Standard Rating Scale 7

1. INTRODUCTION

1.1 Background

The current Airborne Pouch has seen service with the Medical branch in its present form since the 1950's. Concerns have been raised that the medical bag is no longer suitable for the specialized equipment needs and roles of today's Medical Technicians (Med Techs), is incompatible with the integrated Clothe the Soldier (CTS) load carriage system, and has insufficient capacity. To address these concerns, a program was undertaken to pursue the design of a replacement medical load carriage system that could integrate with the CTS load carriage system. Medical bag design advice and prototype production was undertaken by Bill Ostrom of Ostrom Outdoors.

1.1.2 Initial Prototype Development and Testing:

An initial needs analysis and design effort was undertaken with Med Techs on course in CFB Borden in February 2000. At that time this medical bag design effort was constrained to a design solution that could be added on or inserted into the existing CTS load carriage items; there was no scope for development of a dedicated medical bag. Med Techs were focus grouped on the deficiencies with the existing airborne pouch, the medical tasks and conditions of use for any future medical bag design, desired design features and components, and participated in a hands-on review of allied and commercial medical bags, pouches, and components. Based on the results of the focus group discussions two alternative medical bag designs were developed.

The first solution comprised a roll-up sheet with attachments for medical pouches, equipment, and supplies. The roll-up sheet was designed to fit, fully packed, into an empty CTS small pack. While the design fulfilled the constraint for an add-on system, Mech Techs were concerned with the ease and speed of deploying and repacking the system in the field, the need to unpack the entire system when accessing a single item, difficulty keeping the contents clean and dry, and the potential wear and damage from continuous use. The system was also seen as being most suited for field casualty situations and would be less suitable for sick parade or peacekeeping patrol tasks.

The second design consisted of four separate medical pouches that could be attached to the existing CTS small bag or rucksack using fastex straps and the webbing attachment system, or the separate pouches could be worn around the waist using an enclosed belt system. Depending on mission requirements Med Techs would be able to select which of the four pouches they required and the method of carrying the pouch(s): on the body or on the CTS packs. The system also included a frame sheet or flexible pack frame with shoulder straps that enabled the pouches to be carried or worn as a complete independent medical bag system. The complete system could be worn as a pack in the open pack configuration or folded into a single carrying bag in the baggage configuration. Design drawings of this system are included in Annex A.

Both designs were tested at CFB Borden with the same Med Techs who participated in the initial needs analysis and design effort. Tests for each system included assembling, packing and loading, retrieving contents, fitting and adjusting, short walking routes with loaded systems, and the performance of medical field tasks by simulating combat casualty situations and having Med Techs employ each system.

The Med Techs preferred the second design (later known as the OP APOLLO bag) and several prototypes were developed for field testing, including several suggested modifications resulting from the evaluations at CFB Borden. This medical bag design was tested with Med Techs from 3PPCLI in OP APOLLO in Afghanistan where much of the deployment was characterized by dismounted operations in mountainous terrain. While Med Techs found the medical pouches to be useful and effective for sick parade and local patrols, the design of a four-pouch system with a separate frame sheet carrier proved unsuccessful in longer range patrols and extended operations on foot, where Med Techs were required to carry a full CTS marching load in addition to the medical bag system. Generally, the Med Techs did not employ the separate frame sheet carrier, preferring instead to always secure the separate pouches to their existing CTS load carriage system. Most Med Techs noted that, during combat operations in the field, this med bag system comprised too many separate pouches, straps, and attachments which could be lost, misplaced, or damaged, especially at night. This system, with multiple pouches and openings, also proved to be too complicated for high stress and low light operations when items must be located and retrieved quickly. There were many specific features of the OP APOLLO design that were well liked by the Med Techs but the system as a whole was considered unsuitable for combat operations.

1.1.2 Single-bag Prototype Development and Testing:

In response to the shortcomings of the OP APOLLO medical bag a new design effort was initiated to build on the OP APOLLO lessons-learned without the original constraint of providing only an add-on solution. Experience with the OP APOLLO system had confirmed that a single, separate, integrated medical bag design, which was based on the qualities of the CTS small pack and the features of the OP APOLLO system, with interior, removable pouches would be the most effective approach.

This new design effort was carried out with Med Techs from 1Fd Amb in CFB Edmonton who brought their operational experience and knowledge of the OP APOLLO design to bear on the problem. Three distinct single-bag prototype medical bags were designed with the support and assistance of 1Fd Amb. These three designs reflected a range of sizes (smaller, medium, and larger capacities), alternative shoulder strap systems (single sized vs three detachable sizes), different back pad panel designs (moulded vs flat, different materials, different shapes), alternative pouch configurations and layouts, different securement methods and adjustments, external pouches (side pouches, lid pouches), alternative internal pouch designs (different sizes, colours, labelling, materials, covers, and closures), different carry handles, more or less webbing attachment points, and different load carriage adjustments.

These designs were tested for load capacity and packing, usability under a range of simulated medical scenarios, load carriage performance, compatibility with clothing, equipment, and weapons, and fit acceptance among a range of Med Techs. From this design exercise a single medical bag prototype (named Medbag 2003) emerged with the most preferred features of the three distinct design prototypes.

1.2 Aim

The aim of this project was to conduct a limited human factors user-trial evaluation of the prototype MedBag 2003 design.

1.3 MedBag 2003 Description

The MedBag 2003 medical bag was a single bag enclosure with significant load carriage design features. The construction included a stiffened frame sheet and single vertical aluminum stay.

The bag included a single opening lid with double zippers; daisy chain webbing on the top, side, and front surfaces; velcro name tag strip; top carry handle; two sets of Fastex compression straps on each side; and CADPAT exterior fabric (Figure 1).

Figure 1: Medical Bag

The back panel was moulded to support the load bearing areas of the back while providing venting channels to dissipate sweat vapour and ventilate airflow to the back (Figure 2). The system included scalloped, padded, detachable shoulder straps that came in three sizes. The shape of the shoulder straps conformed to the CTS shape to ensure good compatibility with the fragmentation vest and tactical vest.

Shoulder strap adjustments included lower tightening straps, load lifter straps at the top of the shoulders, a sternum strap to stop the shoulder straps from sliding out and compressing the armpits, and a strap adjustment for the width of strap separation at the neck. A detachable waist belt was included to further stabilize the medical bag during high intensity, combat movements.

Detachable straps with clip-on fasteners were included for mounting the medical bag to the rucksack system.

Figure 2: Back Panel

The interior of the bag included sewn-in, zippered mesh pockets on the interior sides of the bag and the floor of the bag was surfaced in Velcro (Figure 3 and 5).

The interior surface of the lid included a foldable vitals board with a large mesh pocket on one side of the vitals board cover and a series of elastic loops on the other side for securing essential equipment and medical supplies.

Space was provided for a hydration system and a covered opening was provided for the drinking tube.

Figure 3: Bag Interior

The following bags were included with the system:

1. Airway Bag (orange): Essential airway items that must remain clean and dry were stowed in the interior mesh, zippered pocket or mounted to the elastic loops on the inside of the bag lid. Additional elastic loops were provided on the exterior of the lid. A tether strap with Fastex fastener was included to secure the airway bag to the medical bag (Figure 4).

2. Large Utility Bag (red): The large utility bag included a clear see-through lid with label pouch and a double zipper.

3. Insulated Bag (purple): The insulated bag included foam insulation throughout for stowing IV bags and mesh liner openings for adding heat packs. The bag included a double zipper.

4. Small Utility Bags (yellow/green/black): The small utility bags included a single zipper, a clear lid, and label pouch. These bags included a Velcro bottom for securing to the floor of the medical bag.

Figure 4: Airway Bag Tether

Figure 5: Interior Stowed

2. METHOD

2.1 Overview

Prior to issuing the MedBag 2003 system, participants were provided with a briefing on the functionality and operation of the medical bag and all its pouches, bags, and components. Instruction was provided in sizing, fitting, and adjustment, and participants were briefed on how to minimize the demands of the carried load through the use of the many different adjustments provided with the pack system.

Participants were briefed on the human factors evaluation criteria used in this study and each Med Tech was provided with a trial diary. The trial diary included labelled drawings of the medical bag, pouches, bags, and components with space provided to record notes on the suitability of the functional components and features of the system.

Once issued, Med Techs were required to use the MedBag 2003 as their primary medical bag during the performance of their day to day activities both in Garrison, on Field Exercises and on deployment in Operational Theaters.

Upon each Group's return to their Unit, available Med Techs were issued an Exit Questionnaire and a focus group was held to discuss their ratings, identify pros and cons with the system, and to determine whether any further design modifications were required prior to fielding.

2.2 Participants

Participants for the study included Med Techs from 1 Field Ambulance (CFB Edmonton) and 2 Field Ambulance (CFB Petawawa). Participants were selected by the Medical Branch for specific trade qualifications and experience.

The participants comprised two groups of 9 (1 Fd Amb) and 14 (2 Fd Amb) participants respectively.

Group 1 (9 pers from 1 Fd Amb) evaluated the medical bag during the following activities:

- Critical Combat Care Course;
- OP Seahawk;
- OP Peregrine; and
- Day to day activities.

Group 2 (14 pers from 2 Fd Amb) evaluated the medical bag while deployed on OP ATHENA in Afghanistan. Participants reported that they typically carried a medical bag mission weight that averaged 20 Kg, with an upper limit up to 40 Kg. Non-medical mission weight items carried in their medical bag included extra magazines and additional water.

2.3 Conditions

Participants reported performing the following tasks over the evaluation period (tasks are combined for both groups).

- Dismounted Patrolling (including both short and Long Range Patrols {LRP});
- Vehicle Borne Usage (Bison/LAV III);
- Day to day Garrison/Camp duties.

The OP ATHENA participants reported that the environmental conditions comprised the following:

- Dusty;
- 40 Deg C to minus 10 Deg C;
- 2 Days of rain during their 6 month rotation;
- Snow in the Mountains; and
- Temperatures dropping quickly at night.

Participants noted that Unit Medical Services were provided day to day at Camp Julien.

2.4 Data Collection

The MedBag 2003 was compared to the Airborne Pouch for the following performance criteria.

1. Fit and Adjustment;
2. Weight, Stability and Size;
3. Packing;
4. Task Performance;
5. Clothing, Equipment and Weapon Compatibility;
6. Kit Integration; and
7. Other, miscellaneous Criteria

Data collection included focus group comments and questionnaire ratings (see Exit Questionnaire in Appendix 1 to Annex C). Participants rated acceptability in all questionnaires using the following seven-point scale (Figure 6).

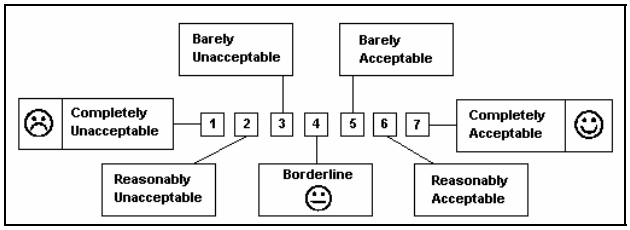

Figure 6: Standard Rating Scale

2.5 Statistical Analysis

A paired t-test was performed to identify statistically significant differences between Exit Questionnaire acceptability ratings for the Airborne Pouch and the MedBag 2003. Differences are reported as significant at $p < 0.05$.

3. RESULTS

Following their operational or exercise deployments, trial participants in Groups 1 and 2 were required to independently complete the Exit Questionnaire and participate in an Exit Focus Group discussion. For each question, participants were required to rate the acceptability of both the in-service Airborne Pouch and the MedBag 2003. Results represent the combined data from both Groups as both trialed the same prototype medical bag version and completed the same questionnaire.

Exit Questionnaire results are summarized below according to the following sections and depicted graphically in Annex C.

- Fit and Adjustment;
- Weight, Stability and Size;
- Packing;
- Task Performance;
- Compatibility;
- Kit Integration; and
- Other (including overall acceptability ratings).

3.1 Fit and Adjustment

With the exception of "Ease of Initial Assembly" and "Ease of Taking Off", the MedBag was rated statistically more acceptable than the Airborne Pouch. For all other fit and adjustment ratings, except "Ease of Putting On", the Airborne Pouch was rated as unacceptable for many factors (i.e. fit, adjustability, and comfort) by almost all participants (83 – 100%).

The MedBag was rated as reasonably acceptable for fit while most participants reported the fit of the Airborne Pouch as unacceptable (83%). Participant ratings for fit were primarily based on wearing Combats, Fleece upper and lower, Fragmentation Vest with Ballistic plates and the Tactical Vest. Some participants (9%) did note that they were fitted for the bag while wearing combats and, as a result, the size of the adjustment straps on the MedBag became too short when wearing the Fragmentation vest with ballistic plates. Several participants suggested that there should be more than one set of shoulder strap anchor attachment locations provided to be able to achieve a narrow fit or a wide fit, depending on shoulder width.

Doffing, or "ease of taking off" was rated as barely acceptable and no different from the Airborne Pouch. Participants reported that removing the MedBag was restricted by the shoulder pads on the fragmentation vest. Shoulder straps caught on the pads, making removal of the pack difficult at times.

Ease of initial assembly for the MedBag was rated similarly to the Airborne Pouch, although the Airborne pouch requires little to no assembly. The MedBag does require considerable set up time due to its range of adjustability.

Participants were unanimous that the MedBag required some form of emergency release, to allow the wearer to quickly doff the bag in emergency situations. Participants suggested that the quick release mechanism employed on the CTS Rucksack seemed robust and easy to use, and should be provided on this bag as well.

3.2 Weight/Stability/Size

With the exception of "Overall Pack Length", the MedBag was rated statistically more acceptable than the Airborne Pouch.

Shorter users reported that the MedBag was too long, especially if the sleeping system is slung on the bottom of the bag. The length of the bag was reported to be problematic by some participants who suggested that the bag's length prevented them from achieving an effective prone firing posture due to contact between the bag and the back of the helmet/head.

The capacity of the bag was judged to be more than adequate, primarily due to the more than adequate depth of the bag. Many participants reported that the capacity of the bag was double that of the Airborne Pouch. Med Techs could use the additional space for IV bags, water, supplies, and personal kit if necessary or, if not they could collapse the additional volume by using the compression straps. As one Med Tech noted "it's better to have the space and not need it than to need it and not have it".

Participants requested that the bag be shortened by two inches to satisfy their concerns for both shorter users and for range of motion issues when slinging a sleeping system.

3.3 Packing

The MedBag was rated higher and statistically more acceptable than the Airborne Pouch, for all packing criteria. Most participants (83 – 91%) indicated that the Airborne Pouch was very unacceptable for organizing contents, and keeping them clean and dry.

Participants reported the following strategy when packing the MedBag:

- Water was packed at the bottom of the MedBag;
- Medical equipment comprised the "middle" layer; and
- Personal kit comprised the "top" layer (yet lowest priority).

Participants suggested that it might be desireable to use the top layer or bottom layer for personal kit so that they could deploy on a limited patrol (< three days) with only one bag. In order to keep personal kit together and separate, participants further suggested that a removable bag, the same size and shape as the pack lid, be provided to stow their kit.

3.4 Task Performance

The Airborne Pouch was rated as unacceptable for task performance. Most concerns were expressed with using the in-service Airborne Pouch for performing infantry tasks, for lack of mission configurability, and lack of modularity. With the exception of "Heliborne Ops", the MedBag was rated statistically more acceptable than the Airborne Pouch for task performance. Participants noted however that they had no experience "jumping" the MedBag, and the results reflected anticipated acceptability based on prior experience.

Similar to concerns reported for the excessive length of the pack, and the difficulty with achieving a suitable prone firing posture for some participants, the task of Fire and Movement while wearing the MedBag was reported as only barely acceptable. The pack tended to come into contact with the head in the prone position, making firing more difficult.

3.5 Compatibility

With the exception of the "Rucksack" and "Vehicle Stowage", the MedBag was rated statistically more acceptable than the Airborne Pouch for compatibility with combat clothing, webbing, the tactical vest, and weapons handling and firing. Vehicle stowage compatibility problems were reported primarily for snagging issues.

3.6 Kit Integration

The MedBag was rated higher and statistically more acceptable than the Airborne Pouch for all Kit Integration criteria. Participants noted that the MedBag capacity was more than adequate for carrying all required equipment to perform the required tasks.

Participants did note that the sleeping system was problematic when slung to the bottom of the MedBag. The participants recommended a compression sack for the sleeping system that would reduce volume and length.

While not specifically addressed on the questionnaire, participants reported that the sleeve provided for the "hydration system bag" was unacceptable in its current location. Participants noted that the MedBag had to be emptied in order to access the bag for refilling, and that there was a danger of the bag breaking inside the compartment and damaging the contents of the rest of the bag. Only two participants felt that this feature should be integral to the bag. The remainder of participants would be satisfied with attaching the reservoir to the outside of the bag using the daisy chain webbing and fasteners provided.

The compression straps provided on the bag reportedly loosened over time. Participants suggested that they be replaced with a two-way adjustable buckle.

The bottom Velcro panels on each bag were reported to be very strong; strong enough that participants requested a loop or handle to assist in the removal of the bags from the Velcro floor of the MedBag.

All participants agreed that a second large utility bag would be desireable.

The see-through plastic cover on the smaller interior bags was considered unnecessary since the bags are colour coded and have a large label.

Participants noted that the provision of an insulated bag was particularly useful. During their tasking in Afghanistan, participants reported using heating pads in the bag to keep the stored fluids from freezing, especially when the bag was stored in a vehicle at night.

3.7 Other

With the exception of "Potential for Snagging" the MedBag was rated higher and statistically more acceptable than the Airborne Pouch for the "other" criteria assessed (i.e. pack noise, ease of cleaning, waterproofness, durability, appearance, and the overall rating).

Participants reported that the shoulder straps and compression straps presented a snagging hazard, especially when the MedBag was stored inside vehicles. Some participants suggested that a protective bag which slips over the entire MedBag and has no straps may be the way forward for stowage in vehicles, as well as satisfy some concerns with the jump capabilities of the bag.

While rated highly for acceptability, participants noted that the durability of the MedBag should be further assessed following a more prolonged period of use.

Overall, the MedBag was rated quite highly and acceptable by all participants, and was rated statistically more acceptable than the Airborne Pouch. Almost all participants (87%) rated the overall acceptance of the Airborne Pouch as unacceptable. Participants reported that even without additional modifications, the MedBag was suitable for use in its present design configuration.

3.8 Modifications

The following modifications were suggested by participants.

1. Shorten the overall length of the MedBag by 5 cm
2. Provide loops or a handle for removing interior bags from the floor Velcro of the MedBag.
3. Provide more shoulder strap anchor attachment locations to accommodate both a narrow and a wide option.
4. Provide a quick release mechanism similar to the CTS Rucksack.
5. Eliminate the sleeve for Camelback and the covered opening for the drinking tube.
6. Reduce the strap slippage with the compression strap buckles.
7. Provide an exterior bag for stowage in vehicles to reduce snagging and damage.
8. Eliminate the clear covers on the interior bags and pouches.

3.9 Design Decisions

Following a review by the Medical Branch of the recommended modifications the following decisions were taken to confirm the final MedBag design.

1. Shorten the overall length of the MedBag by 5 cm.

   Decision: The MedBag will not be shortened. However, an additional compression strap will be included at the top of the bag to reduce the bulk of the bag behind the head to limit any clash with the helmet during prone firing or observation postures.

2. Provide loops or a handle for removing interior bags from the floor Velcro of the MedBag.

   Decision: A loop will be provided on each bag to improve the ease of bag extraction from the Velcro attachment surface on the floor of the MedBag.

3. Provide more shoulder strap anchor attachment locations to accommodate both a narrow and a wide option.

   Decision: An adjustable neck strap will be attached between the shoulder straps near the shoulder strap anchor attachment locations so that the user can tighten or loosen the strap to control the spread of the shoulder straps. The neck strap will be removeable for users who do not require the adjustment feature.

4. Provide a quick release mechanism similar to the CTS Rucksack.

   Decision: The CTS quick release system will be added to the MedBag design.

5. Eliminate the sleeve for Camelback and the covered opening for the drinking tube.

   Decision: The sleeve and the drinking tube opening for the Camelback will be eliminated on the MedBag design.

6. Reduce the strap slippage with the compression strap buckles.

   Decision: To eliminate strap slippage, the strap configuration of the the male connector will be attached closer to the center of the front lid to minimize the potential for the buckle being positioned on the corner of the pack when tightened. The buckles will also be changed to the new “self-cleaning” Fastex buckles being adopted by the Clothe the Soldier program.

7. Provide an exterior bag for stowage in vehicles to reduce snagging and damage.

   Decision: An exterior cover bag will be provided to cover the bag from rain and to minimize snagging in vehicles. The cover bag will be constructed of a light, tear-resistant fabric that can be easily folded and stowed in the MedBag with minimal bulk.

8. Eliminate the clear covers on the interior bags and pouches.

   Decision: The clear covers will be removed from all interior bags and pouches but the clear label covers will be retained.

The Medical Branch meeting also confirmed the choices for interior bag colours. Different colours were selected to help differentiate between bags, in combination with the size of the bag. The Canadian Disruptive Pattern (CADPAT) was selected, in each of its three variations (i.e. temperate,

urban, and desert), as the best means of providing camouflage in the field while still making the bags easy to distinguish.

a) Airway Bag – bright orange so that it can be quickly and easily identified in high stress or low light situations and can also be used as a landing zone marker.

b) Large Utility Bag – temperate CADPAT pattern.

c) Insulated Bag – urban CADPAT pattern.

d) Small Utility Bags: Bag 1 – temperate CADPAT pattern.

Bag 2 – urban CADPAT pattern.

Bag 3 – desert CADPAT pattern.

4. Conclusions

In conclusion, the new prototype Med Bag has proven to be an effective, highly accepted replacement design for the in-service Airborne Pouch.

Annex A:
OP APOLLO MedBag Features

The components of the initial prototype MedBag system are presented below, and comprise line drawings with corresponding labels.

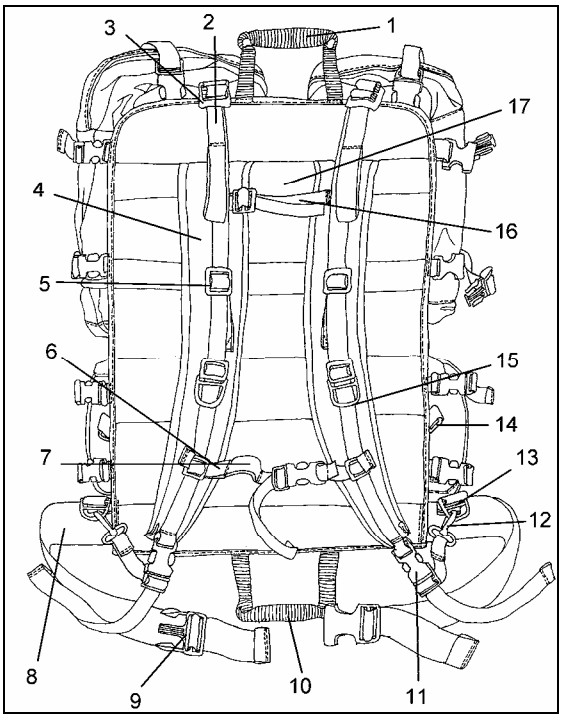

Frame Sheet (Front)

1	Handle (Top)	2	Load Lifter Strap
3	Ladderlock Buckle	4	Shoulder Strap
5	Strap Adjustment Buckle	6	Sternum Strap
7	Sternum Strap Elastic	8	Waist Belt
9	Waist Belt Buckle	10	Handle (Bottom)
11	Shoulder Strap Buckle	12	Strap Attachment Clip
13	Strap Attachment Ring	14	Alternate Attachment Ring
15	D Ring	16	Shoulder Strap Width Adjustment
17	Mesh Panel		

Annex A:
OP APOLLO MedBag Features

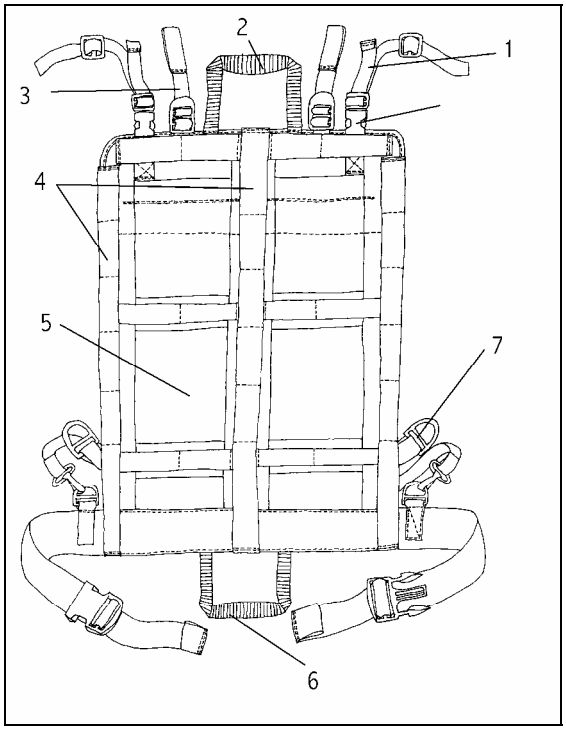

Frame Sheet (Rear)

1	Auxiliary Strap	2	Handle (Top)
3	Auxiliary Strap Buckle	4	Daisy Chain Webbing
5	Mesh Panel	6	Handle (Bottom)
7	Vertical Adjustment Ring		

Annex A:
OP APOLLO MedBag Features

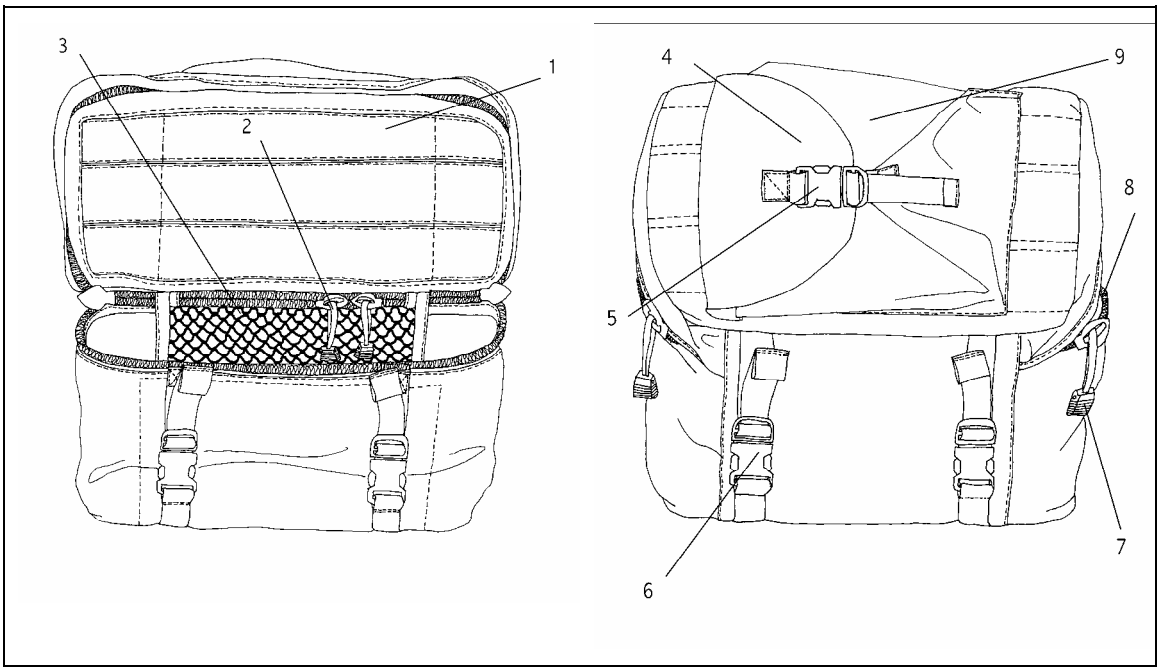

Large Fanny Pack (Pocket on Lid)

1	Pile Material	2	Pocket Zipper Tabs
3	Mesh Pocket Zipper	4	Outer Pouch Flap
5	Pouch Buckle	6	Compression Buckle
7	Main Zipper Tabs	8	Main Zipper
9	Outer Pouch		

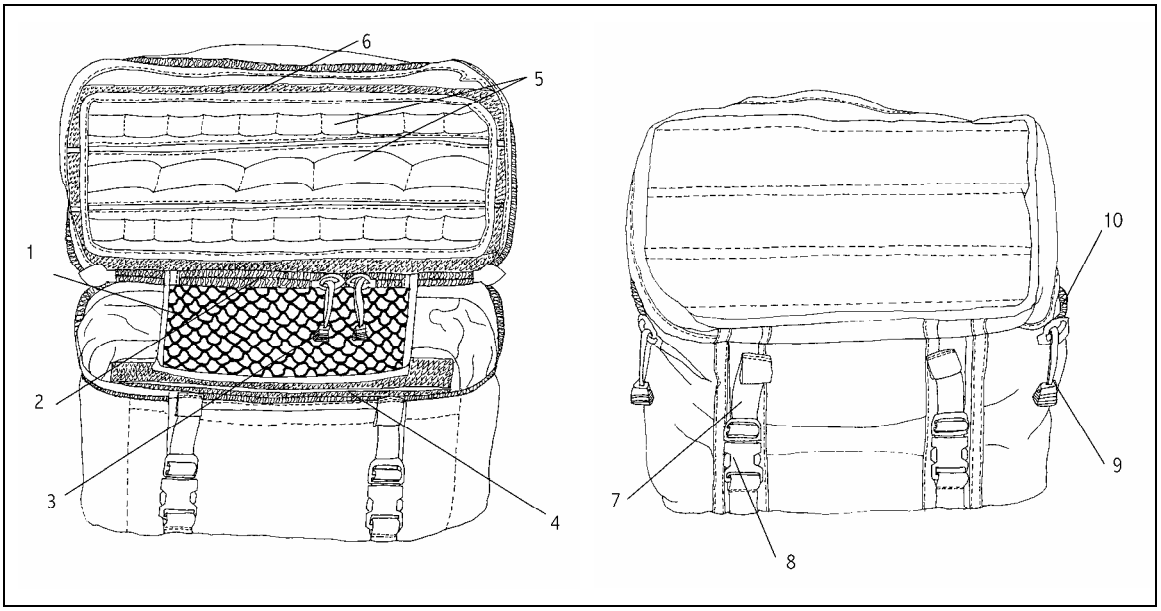

Annex A:
OP APOLLO MedBag Features

Large Fanny Pack (No Pocket on Lid)

1	Mesh Pocket	2	Pocket Zipper
3	Pocket Zipper Tabs	4	Pile Fastener
5	Elastic Loops	6	Pile Fastener (Top)
7	Compression Strap	8	Compression Strap Buckle
9	Main Zipper Tabs	10	Main Zipper

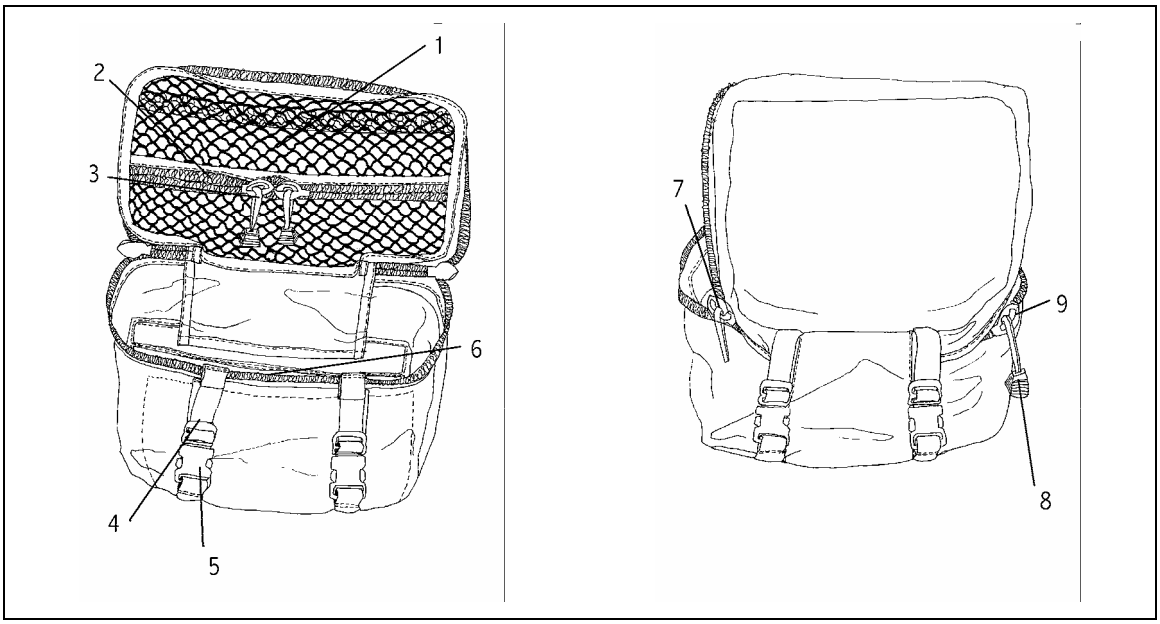

Accessory Bag (Mesh Pocket on Lid Interior)

1	Mesh Pocket	2	Pocket Zipper
3	Pocket Zipper Tabs	4	Compression Strap
5	Compression Strap Buckle	6	Inner Mesh Pocket
7	Main Zipper	8	Main Zipper Tab
9	Main Zipper Pull Cord		

Annex A:
OP APOLLO MedBag Features

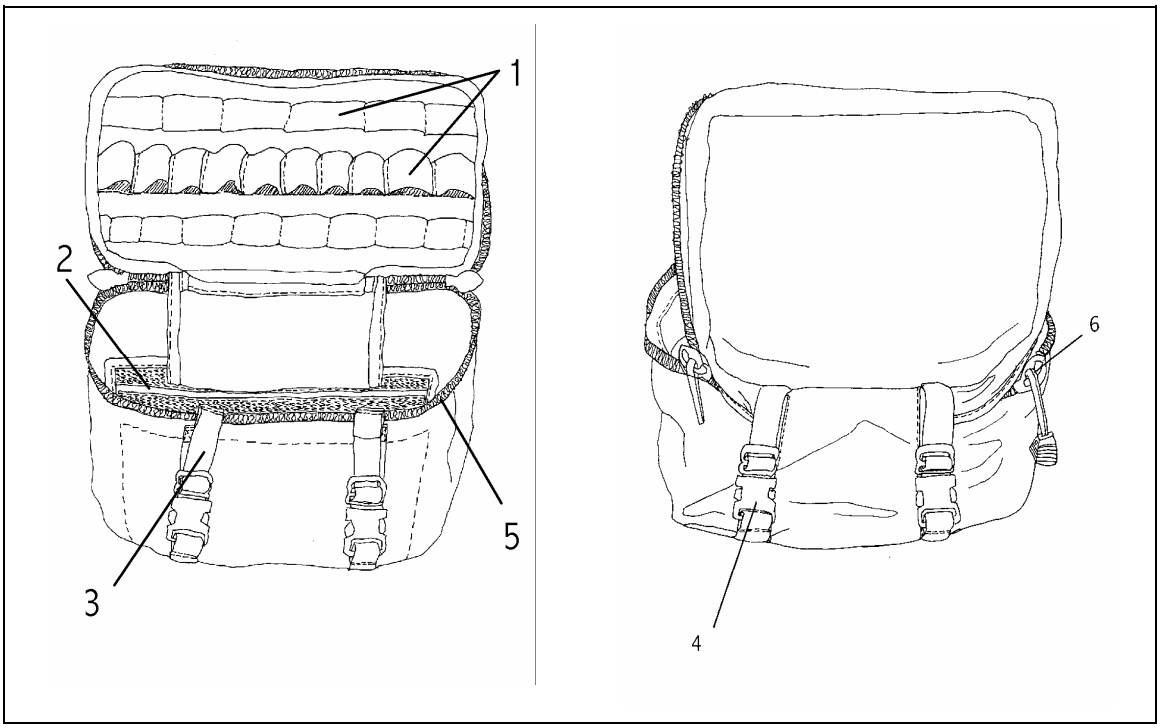

Accessory Bag (Elastic Straps on Lid Interior)

1	Elastic Loops	2	Pile Fastener
3	Compression Strap	4	Compression Strap Buckle
5	Main Zipper	6	Main Zipper Tab

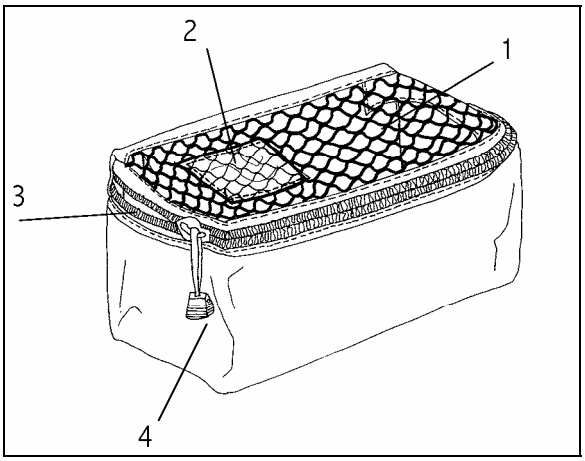

Small Bag

1	Mesh Top	2	Clear ID Slip
3	Zipper	4	Zipper Tabs

Annex A:
OP APOLLO MedBag Features

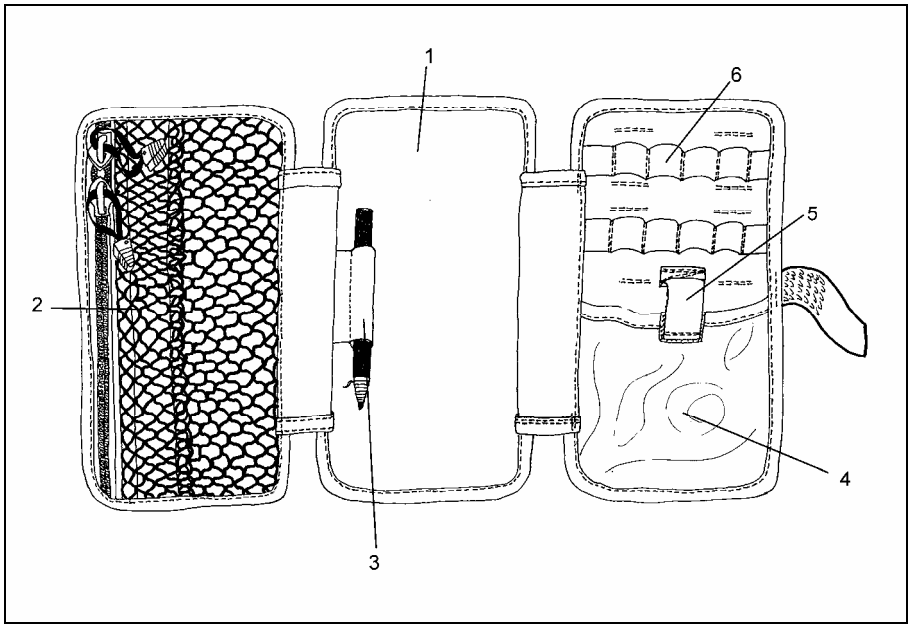

Vitals Board Assembly (Front)

1	Writing Surface	2	Mesh Pocket
3	Pencil Holder	4	Transparent Pouch
5	Pouch Closure	6	Elastic Loops

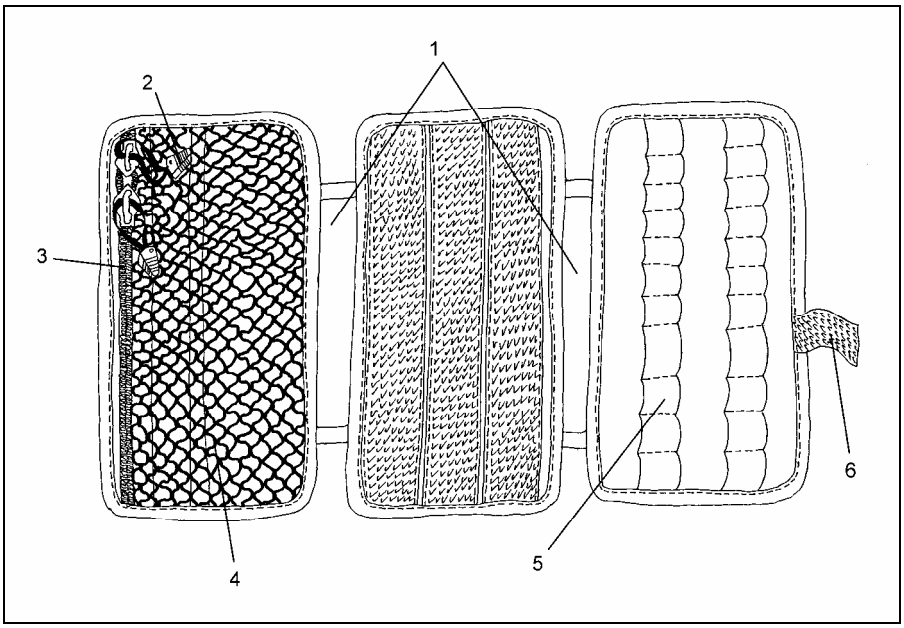

Vitals Board Assembly (Back)

1	Board Connectors	2	Zipper Tabs
3	Zipper	4	Mesh Pocket
5	Elastic Loops	6	Board Closure

Annex B:
MedBag 2003 Features

The components of the second prototype MedBag system are presented below, and comprise line drawings with corresponding labels.

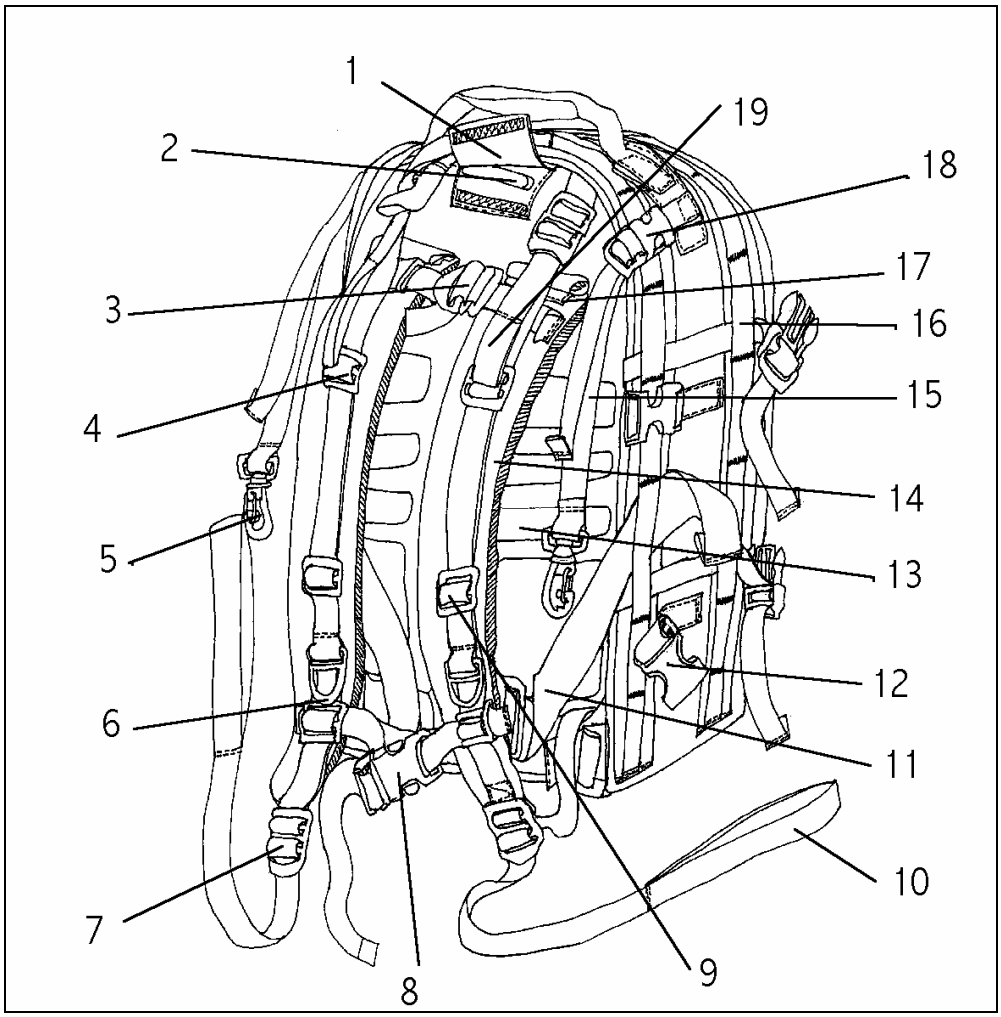

Medbag Exterior

1	Drinking Tube Cover	2	Drinking Tube Cutout
3	Shoulder Width Adjustments	4	Retaining Straps
5	Rucksack Attachment Fastener	6	D Rings
7	Shoulder Strap Adjustment	8	Sternum Strap
9	Shoulder Strap Sliders	10	Adjustment Strap Loops
11	Waistbelt	12	Side Compression Straps
13	Moulded Back Panel	14	Shoulder Strap
15	Rucksack Attachment Strap	16	Daisy-Chain Webbing
17	Shoulder Strap Attachment	18	Rucksack Attachment Buckle
19	Load Lifter Straps		

Annex B:
MedBag 2003 Features

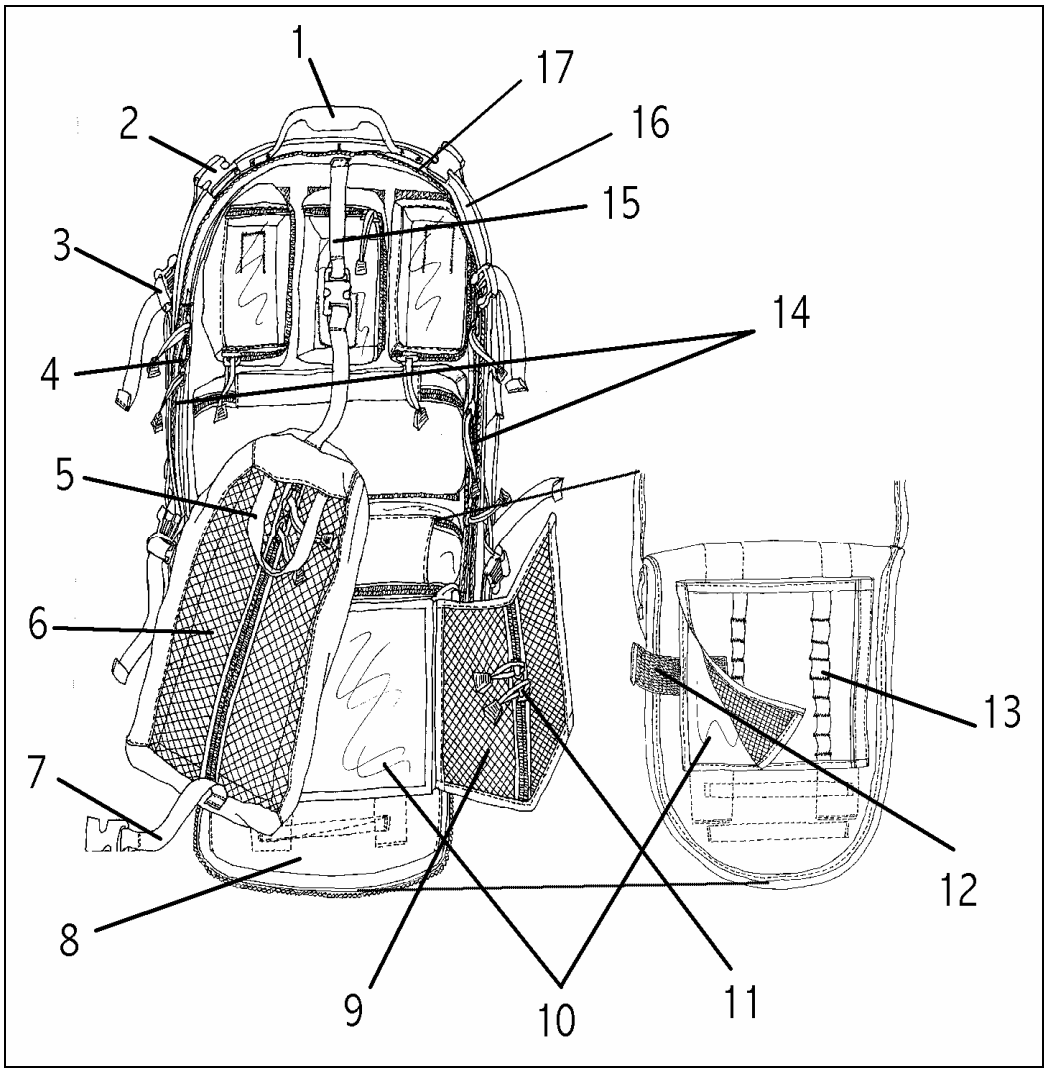

Medbag Interior

1	Carrying Handle	2	Rucksack Attachment Buckle
3	Compression Strap Buckle	4	Interior Mesh Pocket Zip
5	Airway Bag Handle	6	Airway Bag
7	Airway Bag Tether Strap	8	Main Bag Front Flap
9	Vitals Board Mesh Pocket	10	Vitals Board Pad
11	Mesh Pocket Zip	12	Vitals Board Velcro Tab
13	Vitals Board Elastic Loops	14	Mesh Pockets (Internal)
15	Tether Strap	16	Exterior Fabric
17	Main Bag Zip		

Annex B:
MedBag 2003 Features

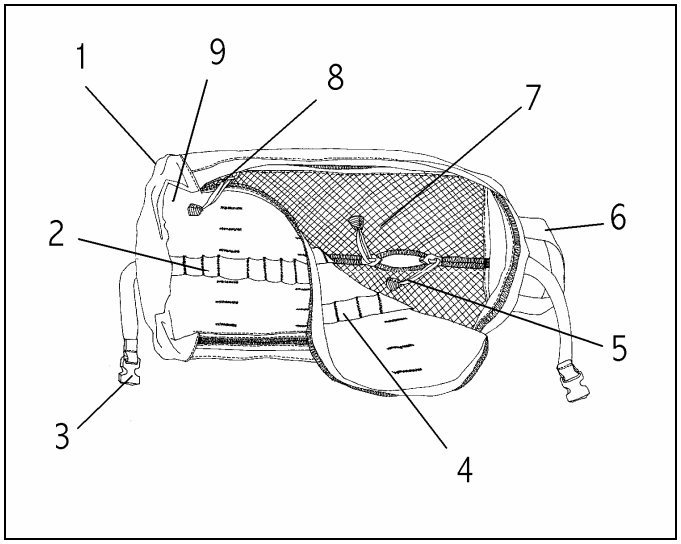

Airway Bag

1	Zip Pocket (Rear)	2	Elastic Loop (outside)
3	Tether Strap attachment	4	Elastic Loop (inside)
5	Internal Pocket Zip	6	Carrying Handle
7	Internal Mesh Pocket	8	Main Zip
9	Bag Fabric		

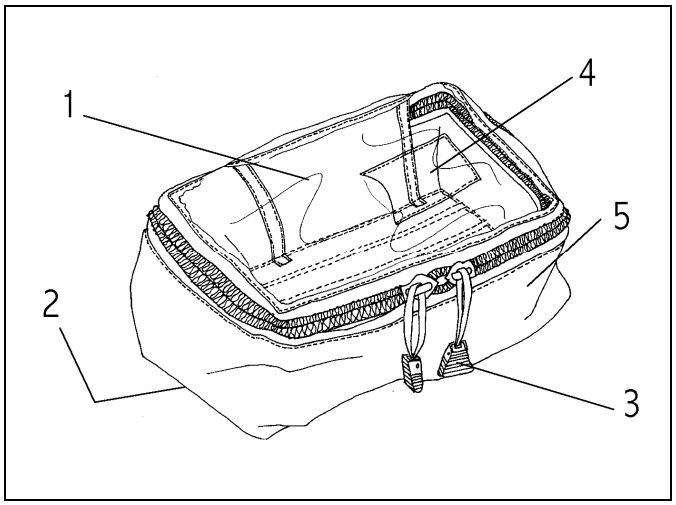

Large Utility Bag

1	Clear Cover	2	Velcro Fastners (Bottom)
3	Main Zip	4	ID/Name Pouch
5	Bag Fabric		

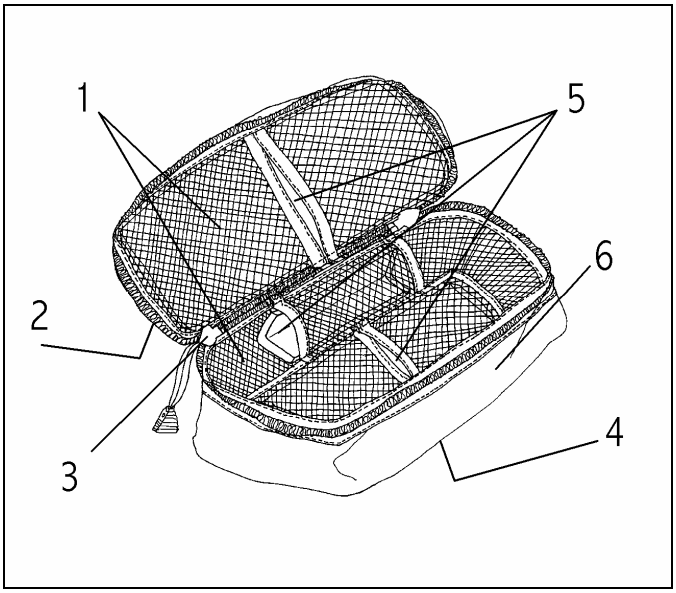

Insulated Bag

1	Mesh Lining	2	ID/Name Pouch (outside)
3	Main Zip	4	Velcro Attachment
5	Insulation Foam	6	Bag Fabric

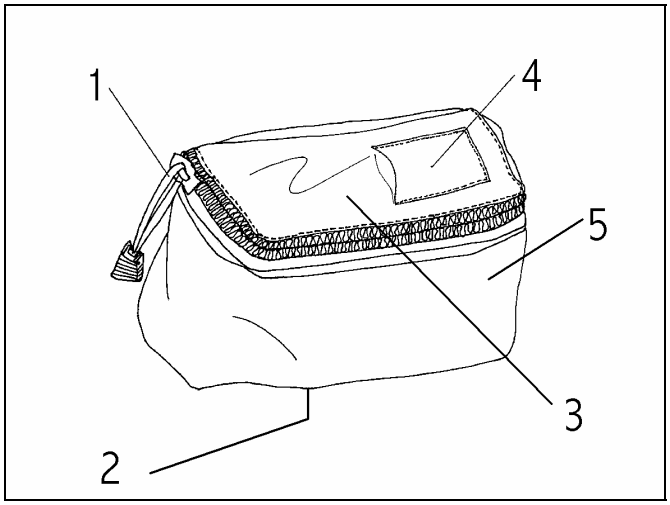

Small Utility Bag

1	Main Zip	2	Velcro Attachment
3	Clear Cover	4	ID/Name Pouch
5	Bag Fabric		

Annex C:
Exit Results

Trial participants in Groups 1 and 2 were required to independently complete the Exit Questionnaire (Appendix 1 to this Annex) and participate in an Exit Focus Group discussion. Results represent the combined data from both Groups as both trialed the same prototype medical bag version and completed the same questionnaire.

Exit Questionnaire results are summarized and depicted graphically in the following Annex according to the following sections.

- Fit and Adjustment;
- Weight, Stability and Size;
- Packing;
- Task Performance;
- Compatibility;
- Kit Integration; and
- Other (including overall acceptability ratings).

Questionnaire items indicated in bold, in the following tables, denote statistically signficant differences between the Airborne Pouch and MedBag 2003 at $p < 0.05$.

Fit/Adjustment

Item	Mean	S.D.	% unacc.	Rating Scale (Wholly Unacceptable 1 – Borderline 4 – Wholly Acceptable 7)
Ease of Initial Assembly				
Airborne Pouch	5.5	1.6	24	
2003 MedBag	5.9	0.9	9	
Overall Fit				
Airborne Pouch	3.0	1.6	83	
2003 MedBag	5.8	0.9	9	
Adjustability				
Airborne Pouch	2.7	1.1	91	
2003 MedBag	6.1	0.7	0	
Comfort through the shoulders				
Airborne Pouch	2.3	1.2	100	
2003 MedBag	6.1	0.9	4	
Comfort through the Chest				
Airborne Pouch	2.7	1.4	91	
2003 MedBag	6.1	0.7	0	
Comfort through the Back				
Airborne Pouch	2.4	1.3	91	
2003 MedBag	6.1	0.8	0	
Ease of putting on				
Airborne Pouch	4.5	1.6	44	
2003 MedBag	5.5	1.0	17	
Ease of taking off				
Airborne Pouch	4.5	1.7	52	
2003 MedBag	5.0	1.2	35	

Note: Item titles that are bolded indicate that the differences between means are significantly different (paired t-tests, $p < 0.05$)

Weight/Stability/Size

Item	Mean	S.D.	% unacc.	Rating Scale (Wholly Unacceptable ☹ 1 2 3 Borderline 😐 4 5 6 Wholly Acceptable ☺ 7)
Perceived Weight of Pack When Worn Loaded				
Airborne Pouch	3.3	1.7	70	x
2003 MedBag	5.2	1.6	26	x
Pack Movement while Running				
Airborne Pouch	2.3	1.4	87	x
2003 MedBag	5.6	1.0	9	x
Load Shift inside pack while Running				
Airborne Pouch	3.0	1.6	74	x
2003 MedBag	5.9	0.7	0	x
Stability				
Airborne Pouch	2.7	1.4	83	x
2003 MedBag	5.9	0.6	0	x
Balance				
Airborne Pouch	2.9	1.3	87	x
2003 MedBag	5.7	0.9	9	x
Pack Bulk				
Airborne Pouch	3.3	1.7	77	x
2003 MedBag	4.7	1.4	32	x
Overall Pack Length				
Airborne Pouch	4.0	1.9	57	x
2003 MedBag	4.6	1.8	48	x
Overall Pack Width				
Airborne Pouch	4.0	1.8	61	x
2003 MedBag	5.2	1.5	26	x

Note: Item titles that are bolded indicate that the differences between means are significantly different (paired t-tests, $p < 0.05$)

Packing

Item	Mean	S.D.	% unacc.	Rating Scale (Wholly Unacceptable ☹ 1 – 2 – 3 – Borderline ☻ 4 – 5 – 6 – Wholly Acceptable ☺ 7)
Overall Stowage Capacity				
Airborne Pouch	3.3	1.8	70	x
2003 MedBag	6.1	1.0	9	x
Ease of Packing Items				
Airborne Pouch	3.7	1.9	57	x
2003 MedBag	6.0	1.0	4	x
Ability to keep Contents Clean				
Airborne Pouch	2.6	1.4	91	x
2003 MedBag	6.4	0.6	0	x
Ability to keep Contents Dry				
Airborne Pouch	2.5	1.5	83	x
2003 MedBag	6.1	0.8	4	x
Ability to Organize Contents				
Airborne Pouch	2.5	1.5	91	x
2003 MedBag	6.5	0.6	0	x
Ease of Retrieving Items				
Airborne Pouch	3.3	1.7	65	x
2003 MedBag	5.6	1.1	13	x

Note: Item titles that are bolded indicate that the differences between means are significantly different (paired t-tests, $p < 0.05$)

Task Performance

Item	Mean	S.D.	% unacc.	Rating Scale (Wholly Unacceptable ☹ 1 2 3 Borderline 😐 4 5 6 Wholly Acceptable ☺ 7)
Suitability for Sick Parade				
Airborne Pouch	3.8	1.4	70	x
2003 MedBag	6.0	1.0	9	x
Suitability for Peacekeeping Patrols				
Airborne Pouch	3.4	1.5	73	x
2003 MedBag	5.7	1.0	9	x
Suitability for Field Casualty Treatment				
Airborne Pouch	3.8	1.5	68	x
2003 MedBag	6.0	0.9	9	x
Mission Configurability				
Airborne Pouch	2.6	1.3	95	x
2003 MedBag	6.1	0.9	9	x
Modularity of Load				
Airborne Pouch	2.6	1.4	91	x
2003 MedBag	6.1	0.8	0	x
Marching/Patrolling				
Airborne Pouch	2.9	1.4	87	x
2003 MedBag	5.9	1.2	9	x
Fire and Movement				
Airborne Pouch	2.9	1.4	86	x
2003 MedBag	4.5	1.7	52	x
Heliborne Ops				
Airborne Pouch	3.4	1.8	67	x
2003 MedBag	4.9	1.8	47	x

Note: Item titles that are bolded indicate that the differences between means are significantly different (paired t-tests, $p < 0.05$)

Compatibility

Item	Mean	S.D.	% unacc.	Rating Scale (Wholly Unacceptable 1 – Borderline 4 – Wholly Acceptable 7)
Combat Clothing				
Airborne Pouch	4.0	1.6	52	
2003 MedBag	6.1	0.8	0	
Webbing				
Airborne Pouch	3.5	1.4	78	
2003 MedBag	5.7	1.1	19	
Tactical Vest				
Airborne Pouch	3.6	1.3	77	
2003 MedBag	6.1	0.9	9	
Rucksack				
Airborne Pouch	3.6	1.8	63	
2003 MedBag	3.6	2.0	67	
Weapon Handling and Firing				
Airborne Pouch	3.7	1.4	77	
2003 MedBag	5.1	1.4	19	
Vehicle Stowage				
Airborne Pouch	4.9	1.7	39	
2003 MedBag	5.5	1.3	27	

Note: Item titles that are bolded indicate that the differences between means are significantly different (paired t-tests, $p < 0.05$)

Other

Item	Mean	S.D.	% unacc.	Rating Scale (Wholly Unacceptable 1 – Borderline 4 – Wholly Acceptable 7)
Potential for Snagging				
Airborne Pouch	4.3	1.4	57	
2003 MedBag	4.3	1.7	57	
Pack Noise				
Airborne Pouch	4.4	1.4	61	
2003 MedBag	5.3	1.3	35	
Ease of Cleaning				
Airborne Pouch	4.1	1.8	48	
2003 MedBag	5.7	0.8	9	
Waterproofness				
Airborne Pouch	2.0	1.2	96	
2003 MedBag	5.8	0.8	9	
Durability				
Airborne Pouch	3.8	2.0	61	
2003 MedBag	5.9	0.7	4	
Appearance				
Airborne Pouch	2.9	1.7	78	
2003 MedBag	6.3	0.3	0	
Overall Acceptability Rating				
Airborne Pouch	3.0	1.4	87	
2003 MedBag	6.0	0.6	0	

Note: Item titles that are bolded indicate that the differences between means are significantly different (paired t-tests, $p < 0.05$)

Appendix 1 to Annex C:
Exit Questionnaire

M E D B A G

MedBag Exit Questionnaire

NAME : | | | | | | | | | | | | |

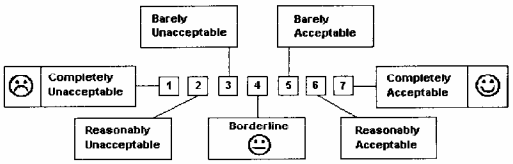

	Airborne Pouch	2003 MedBag
FIT/ADJUSTMENT	☹ 1 2 3 4 5 6 7 ☺	☹ 1 2 3 4 5 6 7 ☺
Ease of Initial Assembly	○ ○ ○ ○ ○ ○ ○	○ ○ ○ ○ ○ ○ ○
Overall Fit	○ ○ ○ ○ ○ ○ ○	○ ○ ○ ○ ○ ○ ○
Adjustability	○ ○ ○ ○ ○ ○ ○	○ ○ ○ ○ ○ ○ ○
Comfort through the Shoulders	○ ○ ○ ○ ○ ○ ○	○ ○ ○ ○ ○ ○ ○
Comfort through the Chest	○ ○ ○ ○ ○ ○ ○	○ ○ ○ ○ ○ ○ ○
Comfort through the Back	○ ○ ○ ○ ○ ○ ○	○ ○ ○ ○ ○ ○ ○
Ease of Putting On	○ ○ ○ ○ ○ ○ ○	○ ○ ○ ○ ○ ○ ○
Ease of Taking Off	○ ○ ○ ○ ○ ○ ○	○ ○ ○ ○ ○ ○ ○
WEIGHT / STABILITY / SIZE	☹ 1 2 3 4 5 6 7 ☺	☹ 1 2 3 4 5 6 7 ☺
Perceived Pack Weight when Worn Loaded	○ ○ ○ ○ ○ ○ ○	○ ○ ○ ○ ○ ○ ○
Pack Movement while Running	○ ○ ○ ○ ○ ○ ○	○ ○ ○ ○ ○ ○ ○
Load Shift inside pack while Running	○ ○ ○ ○ ○ ○ ○	○ ○ ○ ○ ○ ○ ○
Stability	○ ○ ○ ○ ○ ○ ○	○ ○ ○ ○ ○ ○ ○
Balance	○ ○ ○ ○ ○ ○ ○	○ ○ ○ ○ ○ ○ ○
Pack Bulk	○ ○ ○ ○ ○ ○ ○	○ ○ ○ ○ ○ ○ ○
Overall Pack Length	○ ○ ○ ○ ○ ○ ○	○ ○ ○ ○ ○ ○ ○
Overall Pack Width	○ ○ ○ ○ ○ ○ ○	○ ○ ○ ○ ○ ○ ○
PACKING	☹ 1 2 3 4 5 6 7 ☺	☹ 1 2 3 4 5 6 7 ☺
Overall Stowage Capacity	○ ○ ○ ○ ○ ○ ○	○ ○ ○ ○ ○ ○ ○
Ease of Packing Items	○ ○ ○ ○ ○ ○ ○	○ ○ ○ ○ ○ ○ ○
Ability to keep Contents Clean	○ ○ ○ ○ ○ ○ ○	○ ○ ○ ○ ○ ○ ○
Ability to keep Contents Dry	○ ○ ○ ○ ○ ○ ○	○ ○ ○ ○ ○ ○ ○
Ability to Organize Contents	○ ○ ○ ○ ○ ○ ○	○ ○ ○ ○ ○ ○ ○
Ease of Retrieving Items	○ ○ ○ ○ ○ ○ ○	○ ○ ○ ○ ○ ○ ○

Appendix 1 to Annex C: Exit Questionnaire

M E D B A G

MedBag Exit Questionnaire

	Airborne Pouch	2003 MedBag
TASK PERFORMANCE	☹ 1 2 3 4 5 6 7 ☺	☹ 1 2 3 4 5 6 7 ☺
Suitability for Sick Parade	○ ○ ○ ○ ○ ○ ○	○ ○ ○ ○ ○ ○ ○
Suitability for Peacekeeping Patrols	○ ○ ○ ○ ○ ○ ○	○ ○ ○ ○ ○ ○ ○
Suitability for Field Casualty Treatment	○ ○ ○ ○ ○ ○ ○	○ ○ ○ ○ ○ ○ ○
Mission Configurability	○ ○ ○ ○ ○ ○ ○	○ ○ ○ ○ ○ ○ ○
Modularity of Load	○ ○ ○ ○ ○ ○ ○	○ ○ ○ ○ ○ ○ ○
Marching/Patrolling	○ ○ ○ ○ ○ ○ ○	○ ○ ○ ○ ○ ○ ○
Fire and Movement	○ ○ ○ ○ ○ ○ ○	○ ○ ○ ○ ○ ○ ○
Heliborne Ops	○ ○ ○ ○ ○ ○ ○	○ ○ ○ ○ ○ ○ ○
COMPATIBILITY	☹ 1 2 3 4 5 6 7 ☺	☹ 1 2 3 4 5 6 7 ☺
Combat Clothing	○ ○ ○ ○ ○ ○ ○	○ ○ ○ ○ ○ ○ ○
Webbing	○ ○ ○ ○ ○ ○ ○	○ ○ ○ ○ ○ ○ ○
Tactical Vest	○ ○ ○ ○ ○ ○ ○	○ ○ ○ ○ ○ ○ ○
Rucksack	○ ○ ○ ○ ○ ○ ○	○ ○ ○ ○ ○ ○ ○
Weapon Handling and Firing	○ ○ ○ ○ ○ ○ ○	○ ○ ○ ○ ○ ○ ○
Vehicle Stowage	○ ○ ○ ○ ○ ○ ○	○ ○ ○ ○ ○ ○ ○
KIT INTEGRATION	☹ 1 2 3 4 5 6 7 ☺	☹ 1 2 3 4 5 6 7 ☺
Accessory Bag Volume for stowing Personal Kit	○ ○ ○ ○ ○ ○ ○	○ ○ ○ ○ ○ ○ ○
Ability to Carry Personal Kit and your Medical Bag	○ ○ ○ ○ ○ ○ ○	○ ○ ○ ○ ○ ○ ○
Ability to Integrate other Equipment with the Medical Bag	○ ○ ○ ○ ○ ○ ○	○ ○ ○ ○ ○ ○ ○
Ability to Integrate Sleeping System with the Medical Bag	○ ○ ○ ○ ○ ○ ○	○ ○ ○ ○ ○ ○ ○
OTHER	☹ 1 2 3 4 5 6 7 ☺	☹ 1 2 3 4 5 6 7 ☺
Potential for Snagging	○ ○ ○ ○ ○ ○ ○	○ ○ ○ ○ ○ ○ ○
Pack Noise	○ ○ ○ ○ ○ ○ ○	○ ○ ○ ○ ○ ○ ○
Ease of Cleaning	○ ○ ○ ○ ○ ○ ○	○ ○ ○ ○ ○ ○ ○
Waterproofness	○ ○ ○ ○ ○ ○ ○	○ ○ ○ ○ ○ ○ ○
Durability	○ ○ ○ ○ ○ ○ ○	○ ○ ○ ○ ○ ○ ○
Appearance	○ ○ ○ ○ ○ ○ ○	○ ○ ○ ○ ○ ○ ○
OVERALL ACCEPTANCE RATING	○ ○ ○ ○ ○ ○ ○	○ ○ ○ ○ ○ ○ ○

Appendix 1 to Annex C:
Exit Questionnaire

M E D B A G

MedBag Exit Questionnaire

COMMENTS: Please use the back of this sheet for additional comments

DOCUMENT CONTROL DATA
(Security classification of the title, body of abstract and indexing annotation must be entered when the overall document is classified)

1. ORIGINATOR (The name and address of the organization preparing the document, Organizations for whom the document was prepared, e.g. Centre sponsoring a contractor's report, or tasking agency, are entered in section 8.)

Publishing: DRDC Toronto

Performing: Humansystems Incorporated, 111 Farquhar St., 2nd floor, Guelph, Ontario, N1H 3N4

Monitoring:

Contracting:

2. SECURITY CLASSIFICATION (Overall security classification of the document including special warning terms if applicable.)

UNCLASSIFIED

3. TITLE (The complete document title as indicated on the title page. Its classification is indicated by the appropriate abbreviation (S, C, R, or U) in parenthesis at the end of the title)

Design and Evaluation of a New Medical Bag (U)
La Conception et L'évaluation d'un Nouveau Sac Médical

4. AUTHORS (First name, middle initial and last name. If military, show rank, e.g. Maj. John E. Doe.)

David Tack; P. Gaughan; Linda Bossi; Andrew Appleton

5. DATE OF PUBLICATION (Month and year of publication of document.)

May 2005

6a NO. OF PAGES (Total containing information, including Annexes, Appendices, etc.)

42

6b. NO. OF REFS (Total cited in document.)

7. DESCRIPTIVE NOTES (The category of the document, e.g. technical report, technical note or memorandum. If appropriate, enter the type of report, e.g. interim, progress, summary, annual or final. Give the inclusive dates when a specific reporting period is covered.)

Contract Report

8. SPONSORING ACTIVITY (The names of the department project office or laboratory sponsoring the research and development − include address.)

Sponsoring: Canadian Forces Health Services Group Headquarters, 1745 Alta Vista Drive, Ottawa, Ontario, K1A 0K6

Tasking:

9a. PROJECT OR GRANT NO. (If appropriate, the applicable research and development project or grant under which the document was written. Please specify whether project or grant.)

PWGSC Contract No. W7711−9−7582/01/TOR, PWGSC Contract No. W7711−9−7709/01/TOR

9b. CONTRACT NO. (If appropriate, the applicable number under which the document was written.)

10a. ORIGINATOR'S DOCUMENT NUMBER (The official document number by which the document is identified by the originating activity. This number must be unique to this document)

DRDC Toronto CR 2005−187

10b. OTHER DOCUMENT NO(s). (Any other numbers under which may be assigned this document either by the originator or by the sponsor.)

11. DOCUMENT AVAILABILIY (Any limitations on the dissemination of the document, other than those imposed by security classification.)

Unlimited distribution

12. DOCUMENT ANNOUNCEMENT (Any limitation to the bibliographic announcement of this document. This will normally correspond to the Document Availability (11), However, when further distribution (beyond the audience specified in (11) is possible, a wider announcement audience may be selected.))

Unlimited announcement

DOCUMENT CONTROL DATA
(Security classification of the title, body of abstract and indexing annotation must be entered when the overall document is classified)

13. ABSTRACT (A brief and factual summary of the document. It may also appear elsewhere in the body of the document itself. It is highly desirable that the abstract of classified documents be unclassified. Each paragraph of the abstract shall begin with an indication of the security classification of the information in the paragraph (unless the document itself is unclassified) represented as (S), (C), (R), or (U). It is not necessary to include here abstracts in both official languages unless the text is bilingual.)

(U) Concerns have been raised that the 1950's design of the Airborne Pouch medical bag, currently employed in the Canadian Forces Medical Branch, is outdated and no longer suitable for the specialized equipment needs and roles of today's Med Techs, is incompatible with the integrated Clothe the Soldier (CTS) load carriage system, and has insufficient capacity. A program was undertaken to pursue the design of a replacement medical load carriage system that could integrate with the CTS load carriage system.

A needs analysis and a series of design iterations and testing with experienced Med Techs resulted in the design of a new prototype MedBag. The new prototype underwent a series of user acceptance trials. The results of these field trials confirmed the deficiencies with the Airborne Pouch and most Med Techs judged the Airborne Pouch to be unacceptable (86−89%). In contrast, the prototype MedBag was judged to be very acceptable by all Med Techs (100%). The MedBag was rated highly for comfort, pack weight, balance, stability, packing and organizing contents, medical and most infantry tasks, compatibility with clothing and the tactical vest, and its appearance. Several minor design suggestions were also provided by Med Techs during focus group discussions. These suggestions were reviewed by the Medical Branch and a final MedBag design was confirmed.

(U) Certaines inquiétudes découlent du fait que le sac médical ou sac pour troupes aéroportées actuellement utilisé par les Services de santé des Forces canadiennes, dont la conception remonte aux années cinquante, est démodé et qu'il ne convient plus aux besoins en équipement spécialisé et aux rôles des Tech méd d'aujourd'hui, et qu'il est incompatible avec le système de transport de charge intégré du projet Habillez le soldat (HLS), et que sa capacité est insuffisante. Un programme a été mis sur pied afin de concevoir un système de transport de charge de matériel médical de remplacement qui pourrait s'intégrer au système de transport de charge du projet HLS.
Une analyse des besoins et une série de conceptions itératives et d'essais auprès de Tech méd expérimentés ont débouché sur la conception d'un nouveau prototype de sac médical, le MedBag. Le nouveau prototype a subi une série d'essais d'acceptation par l'utilisateur. Les résultats de ces essais pratiques ont confirmé les lacunes du sac médical plus ancien et la plupart des Tech méd ont jugé que ce sac était inacceptable (86 à 89 %). Par contre, le sac médical prototype a été jugé très acceptable par tous les Tech méd (100 %). Le sac médical a été favorablement évalué relativement au confort, au poids, à l'équilibre et à la stabilité, au remplissage et à l'organisation du contenu, aux tâches médicales et à la plupart de celles de l'infanterie, à la compatibilité avec les vêtements et la veste tactique et à son apparence. Plusieurs suggestions mineures en matière de conception ont également été formulées par les Tech méd dans les groupes de discussion. Ces suggestions ont été examinées par les Services de santé et une conception finale du sac médical a été confirmée.

14. KEYWORDS, DESCRIPTORS or IDENTIFIERS (Technically meaningful terms or short phrases that characterize a document and could be helpful in cataloguing the document. They should be selected so that no security classification is required. Identifiers, such as equipment model designation, trade name, military project code name, geographic location may also be included. If possible keywords should be selected from a published thesaurus, e.g. Thesaurus of Engineering and Scientific Terms (TEST) and that thesaurus identified. If it is not possible to select indexing terms which are Unclassified, the classification of each should be indicated as with the title.)

(U) Airborne pouch; MedBag; Medical Bag; Medical pouch; Clothe the Soldier (CTS); Load carriage system; Medical supplies; Medical equipment