LACING AND STIRRUPS IN ONE-WAY SLABS

by:

Stanley C. Woodson
U.S. Army Engineer Waterways Experiment Station
Vicksburg, Mississippi

BACKGROUND

Section 4.23.1 of the Tri-Service Technical Manual (TM) 5-1300 (1) provides some discussion on construction economy. It states that construction costs are divided between labor and material costs, with labor cost accounting for as much as 70 percent of the cost of blast-resistant concrete. TM 5-1300 states that the initial design, optimized for material quantities, may need to be modified when constructibility is considered. It further states that such a modification may actually increase the total cost of materials for the structure while reducing labor-intensive activities. It is generally known that the fabrication and installation of large quantities of shear reinforcement, particularly that having a complex configuration (such as lacing bars), are labor-intensive activities.

An extensive review of test data on reinforced concrete slabs and a study of the related significant parameters from those data were presented at the 24th Department of Defense Explosives Safety Seminar (Reference 1). It was shown that some relaxation in the then current shear reinforcement requirements for military protective structures was justified (References 2 and 3). However, some data gaps need to be filled before new guidelines can be developed for facilities used for explosives handling and storage.

A thorough study of the role of shear reinforcement (stirrups and lacing) in structures designed to resist blast loadings or undergo large deflections has never been conducted.

Report Documentation Page

Form Approved
OMB No. 0704-0188

Public reporting burden for the collection of information is estimated to average 1 hour per response, including the time for reviewing instructions, searching existing data sources, gathering and maintaining the data needed, and completing and reviewing the collection of information. Send comments regarding this burden estimate or any other aspect of this collection of information, including suggestions for reducing this burden, to Washington Headquarters Services, Directorate for Information Operations and Reports, 1215 Jefferson Davis Highway, Suite 1204, Arlington VA 22202-4302. Respondents should be aware that notwithstanding any other provision of law, no person shall be subject to a penalty for failing to comply with a collection of information if it does not display a currently valid OMB control number.

1. REPORT DATE **AUG 1992**	2. REPORT TYPE	3. DATES COVERED **00-00-1992 to 00-00-1992**
4. TITLE AND SUBTITLE **Lacing and Stirrups in One-way Slabs**		5a. CONTRACT NUMBER
		5b. GRANT NUMBER
		5c. PROGRAM ELEMENT NUMBER
6. AUTHOR(S)		5d. PROJECT NUMBER
		5e. TASK NUMBER
		5f. WORK UNIT NUMBER
7. PERFORMING ORGANIZATION NAME(S) AND ADDRESS(ES) **U.S. Army Engineer Waterways Experiment Station,3909 Halls Ferry Rd,Vicksburg,MS,39180-0631**		8. PERFORMING ORGANIZATION REPORT NUMBER
9. SPONSORING/MONITORING AGENCY NAME(S) AND ADDRESS(ES)		10. SPONSOR/MONITOR'S ACRONYM(S)
		11. SPONSOR/MONITOR'S REPORT NUMBER(S)
12. DISTRIBUTION/AVAILABILITY STATEMENT **Approved for public release; distribution unlimited**		
13. SUPPLEMENTARY NOTES **See also ADA260986, Volume III. Minutes of the Twenty-Fifth Explosives Safety Seminar Held in Anaheim, CA on 18-20 August 1992.**		
14. ABSTRACT		
15. SUBJECT TERMS		

16. SECURITY CLASSIFICATION OF:			17. LIMITATION OF ABSTRACT	18. NUMBER OF PAGES	19a. NAME OF RESPONSIBLE PERSON
a. REPORT **unclassified**	b. ABSTRACT **unclassified**	c. THIS PAGE **unclassified**	**Same as Report (SAR)**	**18**	

Standard Form 298 (Rev. 8-98)
Prescribed by ANSI Std Z39-18

A better understanding of the contributions of the shear reinforcement will allow the designer to compare the benefits of using (or not using) shear reinforcement and to determine which type is most desirable for the given structure. This capability will result in more efficient and effective designs as reflected by lower cost structures without the loss of blast-resistant capacity. A reasonable first step toward this goal is to perform a series of laboratory experiments that compare the effects of stirrups and lacing bars on the large-deflection behavior of one-way slabs.

OBJECTIVE

The overall objective of this study was to better understand the effects of shear reinforcement details on slab behavior to improve the state-of-the-art in protective construction design, for both safety and cost effectiveness. This was not particularly a study of shear stresses in slabs, but rather a study of the effects of shear reinforcement on the large-deflection behavior of slabs.

Specifically, the objective was to evaluate and compare the effectiveness of stirrups and lacing bars in enhancing the ductility of one-way slabs. This included a consideration of how shear reinforcement details interact with other physical details to affect the response of a slab. The work reported herein was directed toward the development of new guidelines for designing shear reinforcement in blast-resistant structures.

SCOPE

Sixteen one-way reinforced concrete slabs were statically (slowly) loaded with water pressure in the 4-foot-diameter blast load generator located at the U.S. Army Engineer Waterways Experiment Station (WES). The design, construction, and loading of the specimens are described herein. The responses of the slabs to the uniform loading and the effects of the reinforcement

details on the responses are evaluated.

RESPONSE LIMITS

The data presented in Reference 2 provided a basis for the establishment of the allowable response limits of Reference 3 (ETL 1110-9-7) with qualifications that reflect gaps in the existing data base. The response limits are partially described in Table 1.

The design of structures to resist the effects of accidental explosions is governed by TM 5-1300 (Reference 4), which calls for the use of laced reinforcement for large deflections (support rotations greater than 8 degrees) and for close-in blast (scaled ranges less than 1.0 $ft/lb^{1/3}$). It is obvious that the safety requirements of ETL 1110-9-7 are less conservative than those of TM 5-1300 due to the military nature of structures to be designed in accordance with the ETL guidance. The data base on previous experiments does not include a thorough study comparing the behavior of laced and nonlaced slabs. It is rather a collection of experiments which were conducted for various purposes, thus the various design parameters are difficult to correlate between experiments. The experimental study discussed in the remainder of this paper is a first step toward a more thorough comparison of laced and nonlaced slabs.

CONSTRUCTION DETAILS

In addition to shear reinforcement details, the primary parameters that affect the large-deflection behavior of a one-way reinforced concrete slab include, but may not be limited to: support conditions, amount and spacing of principal reinforcement, scaled range (for blast loads), and the span-to-effective-depth (L/d) ratio. The effects of these parameters on the structural response of a slab must be considered in the study of the role of shear reinforcement.

The slabs were designed to reflect the interaction of shear

reinforcement details with the other primary parameters. Table 2 qualitatively presents the characteristics of each slab. Table 3 presents the same characteristics in a quantitative manner, reflecting the practical designs based on available construction materials. All slabs were designed to be loaded in a clamped (laterally and rotationally restrained) condition and may be considered to be approximately 1/4-scale models of prototype wall or roof slabs of protective structures. Each slab had a clear span of 24 inches, a width of 24 inches, and an effective depth of 2.4 inches, maintaining the L/d ratio at a value of 10. The experimental program was designed to compare the effects of lacing bars and stirrups on slab behavior for three values of principal reinforcement ratio and three values of shear reinforcement spacing.

Figure 1 is a plan view showing the typical reinforcement pattern for some of the slabs. Figures 2, 3, and 4 are sectional views cut through the lengths of the laced slabs. The dashed lacing bar in each figure indicates the configuration of the lacing bar associated with the next principal steel bar. The positions of the lacing bars were alternated to encompass all temperature steel bars. However, some temperature steel bars were not encompassed by lacing bars in slabs No. 4 and 5 due to the spacing of the lacing bar bends. The spacings of the lacing bar bends were controlled by the shear reinforcement quantities in corresponding slabs with stirrups. Figures 5 through 8 are sectional views cut through the lengths of the slabs with stirrups. In slabs with stirrups, the stirrups were spaced along the principal steel bar at the spacings shown in Table 3, never encompassing the temperature steel.

EXPERIMENTAL PROCEDURE

The 4-foot diameter blast load generator was used to slowly load the slabs with water pressure. Preparations for the experiments began with the reaction structure being placed inside

the test chamber and surrounded with compacted sand. A slab was then placed on the reaction structure, and the wire leads from the instrumentation gages and transducers were connected. A 1/8-inch-thick fiber-reinforced neoprene rubber membrane and a 1/8-inch-thick unreinforced neoprene rubber membrane were placed over the slab, and 1/2- by 6- by 24-inch steel plates were bolted into position at each support. Prior to the bolting of the plates, a waterproofing putty was placed between the rubber membrane and the steel plates to seal gaps around the bolts in order to prevent a loss of water pressure during the experiment. The bonnet was bolted into position, and a commercial waterline was diverted to the chamber's bonnet. The waterline valve was again opened slowly, inducing a slowly increasing load to the slab's surface. A pneumatic water pump was connected to the waterline to facilitate water pressure loading in the case that commercial line pressure was not great enough to reach ultimate resistance of the slab in any of the experiments. Monitoring of the pressure gages and deflection gages indicated the behavior of the slab during the experiment and enabled this author to make a decision for termination by closing the waterline valve. Following termination of the experiment, the bonnet was drained and removed. Detailed measurements and photographs of the slab were taken after removal of the neoprene membrane. Finally, the damaged slab was removed and the reaction structure was prepared for another slab.

Figure 9 is a posttest view of the undersurfaces of all sixteen slabs. The slabs were numbered in increasing order from left to right with slabs No. 1 through 5 being shown on the front row. Detailed posttest measurements, photographs, damage survey data, deflection profiles, and the instrumentation data are presented in Reference 5.

Figure 10 shows the general shape of the midspan load-deflection curve for the slabs as measured with the pressure and deflection transducers. Values of load and deflection at

points A through D are given in Table 4. The decision to terminate an experiment depended upon the trend of the monitored load-deflection curves; therefore, the deflection at termination varied among the slabs. The complete load-deflection curves at midspan were not recorded for slabs No. 12, 14, and 16 due to degradation of the deflection gage connections to the slabs (large cracks formed directly at the points of connection) during the experiments. However, the complete load-deflection curves at the one-quarter span location were successfully recorded for slabs No. 12, 14, and 16 and aided in the data analysis.

Compressive membrane forces acted to increase the ultimate capacities of the sixteen one-way slabs from approximately 1.2 to 4.0 times the computed Johansen yield-line resistance. It appeared that lacing was slightly more effective than stirrups in enhancing the ultimate capacities of the slabs. Only for the case of the slabs with a medium ρ value (0.0056) did the slab with stirrups attain a greater ultimate capacity than that with lacing.

The average Δ_A/t ratio (the ratio of midspan deflection occurring at ultimate capacity to the slab thickness) for the slabs was approximately 0.29. There was no consistent pattern to indicate that the Δ_A/t ratio was affected by the construction parameters studied. Consistent with previous work by others, the enhancement in ultimate capacity by compressive membrane forces was greatest for slabs with the smallest ρ, and it decreased as ρ increased. The generally-known compressive membrane theory closely predicted the ultimate capacities of the slabs having the ρ values of 0.0025 and 0.0056 when the experimental values of Δ_A/t were used; but, a low Δ_A/t value of approximately 0.1 was required for the theory to predict the ultimate capacities of the slabs having a ρ value of 0.0097.

Significant spreading of cracking along the length of the slabs did not occur; therefore, significant tensile-membrane behavior did not develop. The tensile-membrane response (and

thus the peak reserve capacity) appeared to be best enhanced by lacing in the slabs with a ρ value of 0.0025, but by stirrups in the slabs with a ρ value of 0.0097. The two types of shear reinforcement appeared to be equally effective in the slabs with the medium ρ value of 0.0056. Of the parameters that were varied, the principal reinforcement ratio was the most significant parameter affecting the reserve capacity. The tensile-membrane theory closely predicted the peak reserve capacities of the slabs with the large ρ value when one-half of the principal steel was considered to be effective. It closely predicted the peak reserve capacities of the slabs with the small ρ value when all of the principal steel was considered. The peak reserve capacities of the slabs with the medium ρ value were bracketed by the theory when both cases were considered.

This investigation indicated that one-way slabs typical of protective construction (equal top and bottom steel, restrained at ends) are susceptible to shear failure when reinforced with approximately 0.5 percent or more principal reinforcement, but no shear reinforcement. Shear reinforcement may not be needed to insure a flexural failure mode in slabs with approximately 0.25 percent principal reinforcement. Support rotations from approximately 20 to 30 degrees were achieved by the 14 slabs that did not incur shear failure.

Due to the response of the slabs as three-hinge mechanisms, crack width was highly dependent on deflection. Some smoothing (spreading of cracking and formation of a catenary, particularly on the top face) occurred in the slabs with the large ρ value. This smoothing appeared to be greatest for slab No. 5; however, slab No. 5 exhibited the least tendency for tensile membrane behavior. Slab No. 5 did exhibit a significantly more gradual drop in resistance following the ultimate capacity. In general, crack widths were slightly less in the laced slabs than in the slabs with stirrups. Strain gage data indicated that lacing bars yielded at lower pressure levels and smaller slab deflections

than did the vertical stirrups, indicating that the lacing was mobilized earlier in making a contribution to a slab's response. However, the responses of the laced and stirrup slabs were very similar, differing a little in resistance values as mentioned above. Other than for slabs No. 5 and 15, the companion pairs of laced and stirrup slabs exhibited load-deflection curves with very similar shapes.

CONCLUSIONS

There were no significant differences in the behavior of the slabs with lacing bars and the slabs with stirrups that were experimentally evaluated in this study. The slight increase in ultimate capacity for laced slabs cannot justify the complications and expense associated with the construction of laced slabs. Single-leg stirrups with a 90-degree bend on one end and a 135-degree bend on the other are sufficient for preventing shear failure and for enhancing the reserve capacity to the same level (or, as in some cases of this study, better) than lacing bars. The experiments showed that, for slabs with principal steel spaced at approximately one-half to two-thirds of d and shear reinforcement spaced less than d, variations in the principal reinforcement ratio have significantly greater effect on slab response than do the type and ratio of the shear reinforcement.

The more ductile response and improved large-deflection behavior that one would expect, based on TM 5-1300, from a laced slab over a slab with stirrups did not occur in this study. The damage levels experienced by the slabs in this study fall into the heavy damage category of ETL 1110-9-7. The data from these experiments support the response limits given in the ETL as being aggressive, yet adequate, design values for slabs of military protective structures that can allow the occurrence of heavy damage, but not collapse. Additionally, this study indicated that design criteria concerning shear reinforcement and slab

response limits in TM 5-1300 may be overly restricted. Although the experiments conducted in this study do not necessarily demonstrate the response of the slabs to any possible blast environment that may occur in an explosives manufacturing/storage facility, they are at least representative of slabs loaded by the slower rising quasi-static pressure that accompanies an internal detonation. In addition, by combining the findings of the experiments conducted during this investigation with the parameter study of Reference 2, one may be reasonably confident that the failure modes and response limits exhibited by the slabs will be duplicated in a direct blast pressure loading that results from a detonation at a scaled range greater than 2.0 $ft/lb^{1/3}$ and possibly as low as 1.0 $ft/lb^{1/3}$.

RECOMMENDATIONS

This investigation merged together an understanding of the history of the development of current design criteria with new data that showed the similar effects of lacing bars and stirrups. Experiments using dynamic loading conditions should be conducted to validate the findings of this study and to further study the effects of lacing and stirrups in close-in blast environments. Additionally, this work study should be extended to slabs with other L/d ratios, particularly "deep" ($L/d < 5$) slabs.

ACKNOWLEDGEMENTS

This paper was based on work sponsored by the U.S. Army Engineer Waterways Experiment Station and by the Department of Defense Explosives Safety Board. Permission to publish this paper was granted by the Office, Chief of Engineers and is gratefully acknowledged.

Table 1 Response Limits of ETL 1110-9-7

Lateral Restraint Condition	Damage Level	Response Limit (Degrees)
Unrestrained	-	6
Restrained	Moderate	12
Restrained	Heavy	20

Table 2 Slab Characteristics (Qualitative)

Slab	$\rho_{tension}$	ρ_{shear}	Lacing	Stirrups	Principal Steel Spacing	Shear Steel Spacing
1	small	none	-	-	0.67d	-
2	medium	none	-	-	0.63d	-
3	large	none	-	-	0.53d	-
4	small	small	x		0.67d	d
5	large	small	x		0.55d	d
6	small	medium	x		0.67d	3d/4
7	medium	medium	x		0.63d	3d/4
8	small	large	x		0.67d	d/2
9	large	large	x		0.55d	d/2
10	small	small		x	0.67d	d
11	small	medium		x	0.67d	3d/4
12	medium	medium		x	0.63d	3d/4
13	medium	medium		x	0.63d	3d/4
(Temperature steel placed exterior to principal steel)						
14	small	large		x	0.67d	d/2
15	large	small		x	0.55d	d
16	large	large		x	0.55d	d/2

Table 3 Slab Characteristics (Quantitative)

Slab	$\rho_{tension}$	ρ_{shear}	Lacing	Stirrups	Principal Steel Spacing (inches)	Shear Steel Spacing (inches)
1	0.0025	none	-	-	D1 @ 1.60	-
2	0.0056	none	-	-	D2 @ 1.50	-
3	0.0097	none	-	-	D3 @ 1.33	-
4	0.0025	0.0026	x		D1 @ 1.60	2.4
5	0.0097	0.0031	x		D3 @ 1.33	2.4
6	0.0025	0.0034	x		D1 @ 1.60	1.85
7	0.0056	0.0036	x		D2 @ 1.50	1.85
8	0.0025	0.0052	x		D1 @ 1.60	1.2
9	0.0097	0.0063	x		D3 @ 1.33	1.2
10	0.0025	0.0026		x	D1 @ 1.60	2.4
11	0.0025	0.0034		x	D1 @ 1.60	1.85
12	0.0056	0.0036		x	D2 @ 1.50	1.85
13	0.0056	0.0036		x	D2 @ 1.50	1.85
(Temperature steel placed exterior to principal steel)						
14	0.0025	0.0052		x	D1 @ 1.60	1.2
15	0.0097	0.0031		x	D3 @ 1.33	2.4
16	0.0097	0.0063		x	D3 @ 1.33	1.2

Table 4 Midspan Load-Deflection Summary

Slab	P_A (psi)	Δ_A (in)	P_B (psi)	Δ_B (in)	P_C (psi)	Δ_C (in)	P_D (psi)	Δ_D (in)
1	57*	0.52	8	2.41	8	2.41	23	3.61
2	87	0.80	44	1.10	44	1.10	53	1.65
3	106	0.45	59	0.51	59	0.51	88	2.18
4	71	0.80	10	2.31	10	2.96	31	4.36
5	135	0.89	70	1.69	27	3.88	41	4.96
6	88	0.79	10	2.58	10	2.58	31	4.80
7	83	0.88	38	2.32	11	3.61	43	4.00
8	64	1.00	8	2.50	8	3.10	26	4.50
9	137	0.91	17	2.85	17	2.85	73	4.22
10	63	0.65	3	2.33	8	3.59	25	4.77
11	63	0.91	2	2.65	2	2.65	22	5.00
12	85	1.10	19	3.10	**	**	**	**
13	89	0.74	25	2.00	25	3.19	41	4.63
14	64	0.87	4	2.60	**	**	**	**
15	130	0.81	58	2.30	14	3.11	75	4.00
16	**	**	**	**	**	**	**	**

* Actual experimental value was greater than shown due to data record clip during experiment.

** Large crack formed directly at deflection gage connection on slab, causing loss of connection.

REFERENCES

1. Woodson, S. C., Gaube, W. H., and Knight, T. C., "Alternative Shear Reinforcement Guidelines for Blast-Resistance Design," Proceedings of the 24th Department of Defense Explosives Safety Seminar, St. Louis, Missouri, 1990.

2. Woodson, S. C., "Response Limits of Blast-Resistant Slabs," Technical Report SL-90-11, US Army Engineer Waterways Experiment Station, Vicksburg, Mississippi, October 1990.

3. Department of the Army, "Response Limits and Shear Design for Conventional Weapons Resistant Slabs," Engineer Technical Letter 1110-9-7, Washington DC, October 1990.

4. Department of the Army, the Navy, and the Air Force, "Structures to Resist the Effects of Accidental Explosions," Army TM 5-1300, Navy NAVFAC P-397, Air Force AFR 88-22, Washington, D.C., November 1990.

5. Woodson, S. C., "Lacing Versus Stirrups -- An Experimental Study of Shear Reinforcement in Blast-Resistant Structures," Technical Report SL-92-2, US Army Engineer Waterways Experiment Station, Vicksburg, Mississippi, March 1992.

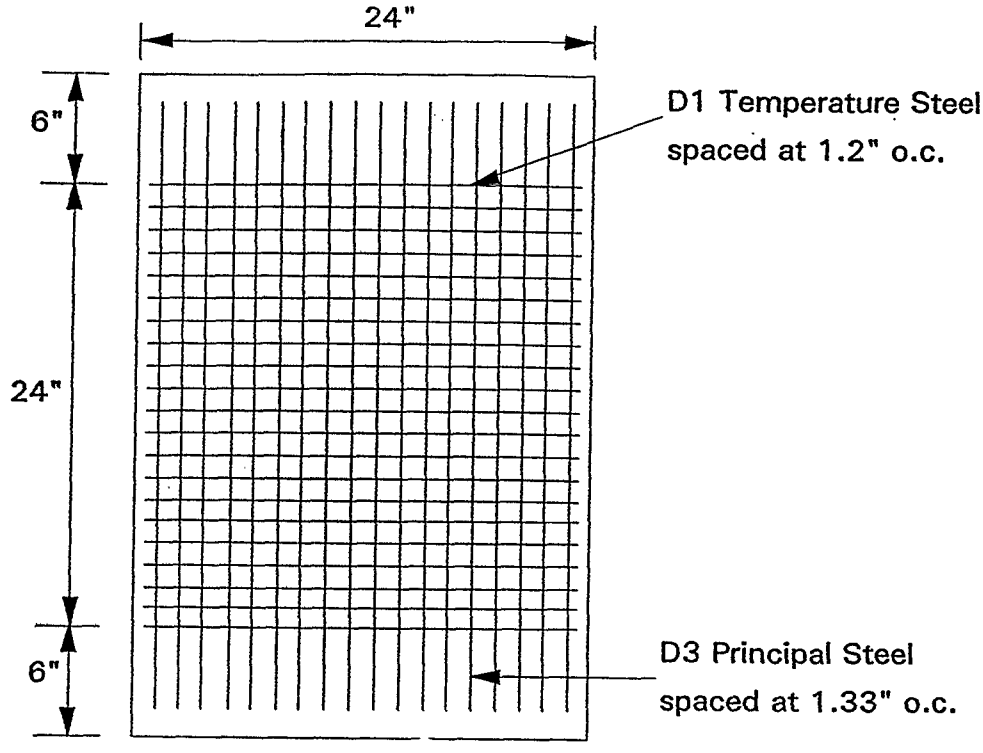

Figure 1. Plan View of Slabs No. 3, 5, 9, 15, and 16

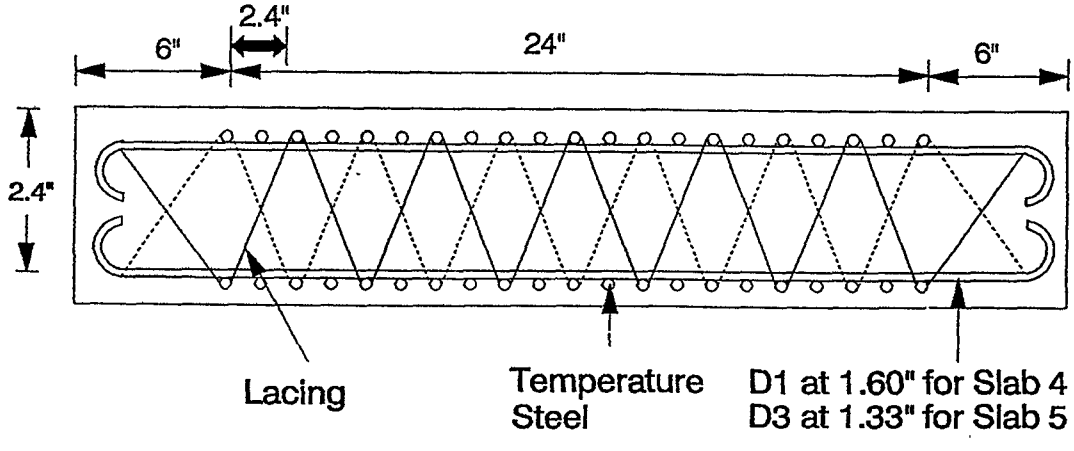

Figure 2. Sectional View Through Length of Slabs No. 4 and 5

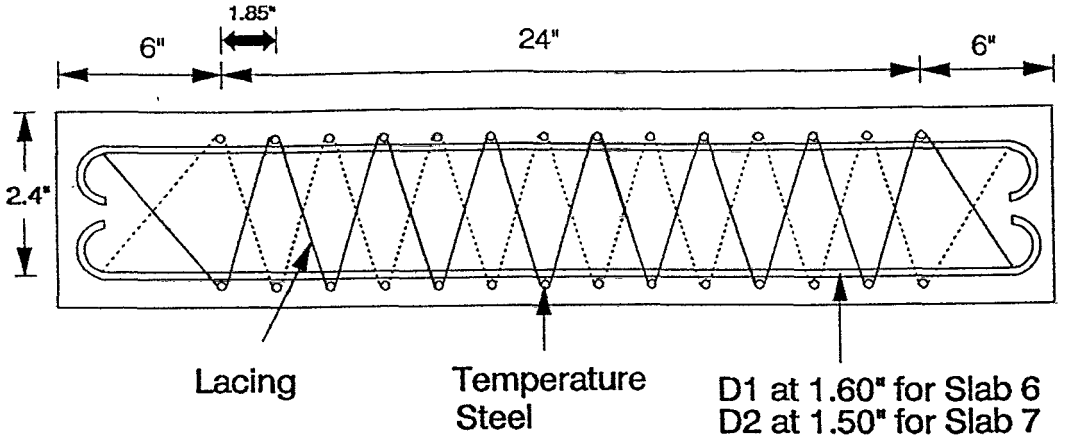

Figure 3. Sectional View Through Length of Slabs No. 6 and 7

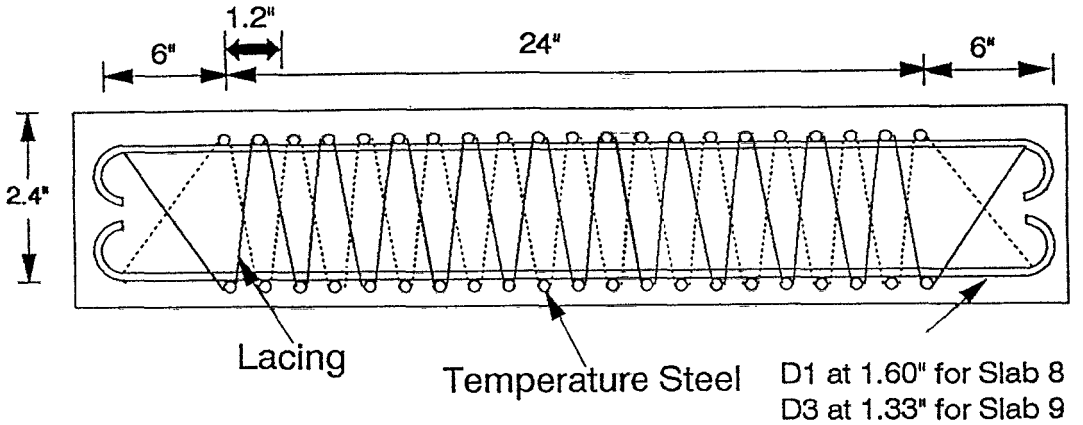

Figure 4. Sectional View Through Length of Slabs No. 8 and 9

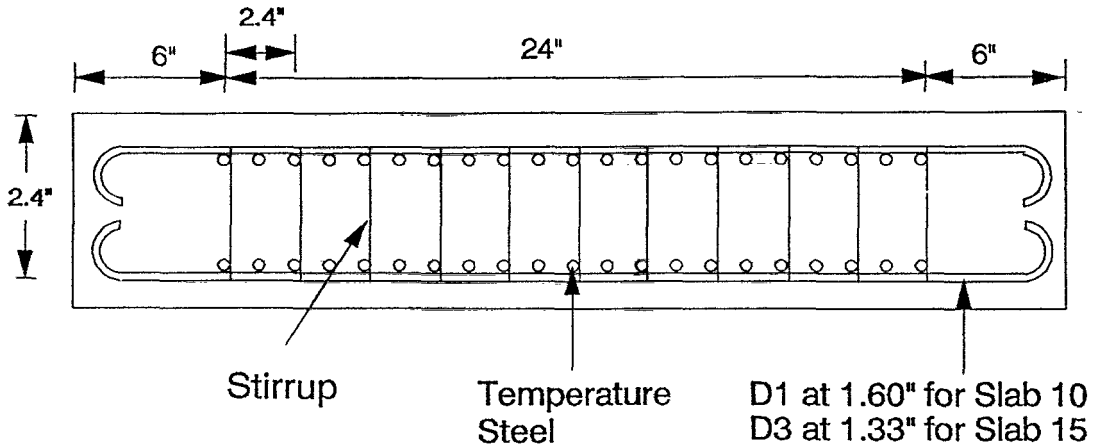

Figure 5. Sectional View Through Length of Slabs No. 10 and 15

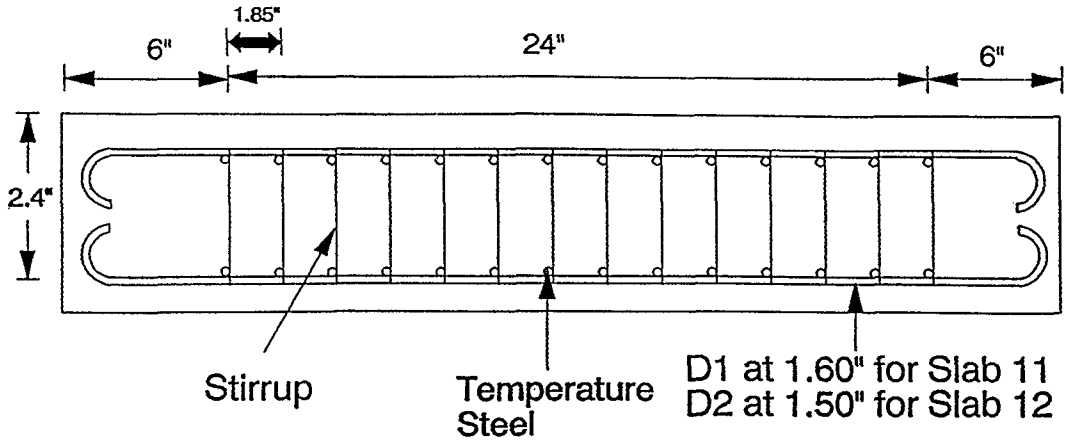

Figure 6. Sectional View Through Length of Slabs No. 11 and 12

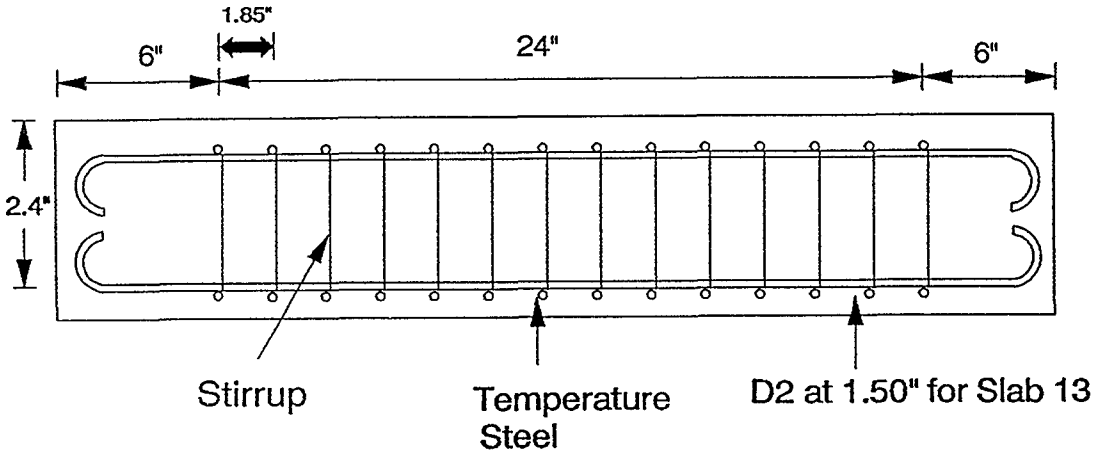

Figure 7. Sectional View Through Length of Slab No. 13

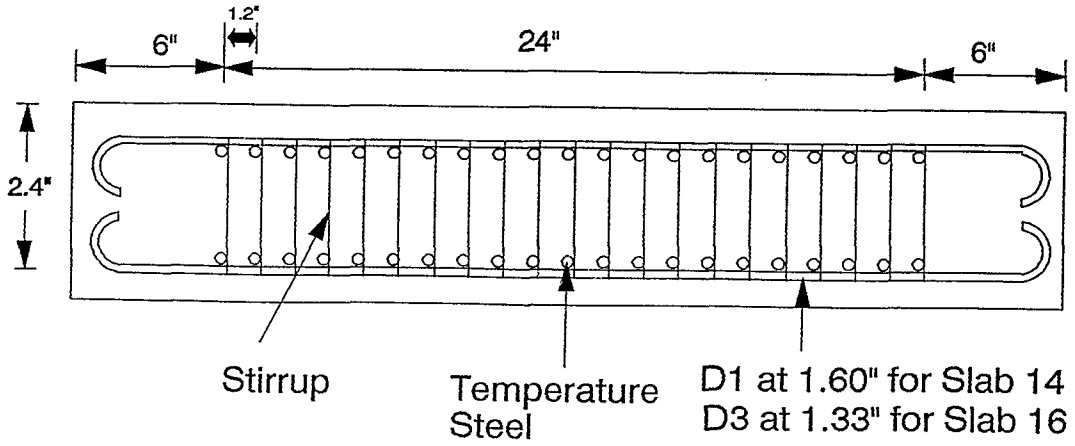

Figure 8. Sectional View Through Length of Slabs No. 14 and 16

Figure 9. Posttest View of Undersurface of Slabs

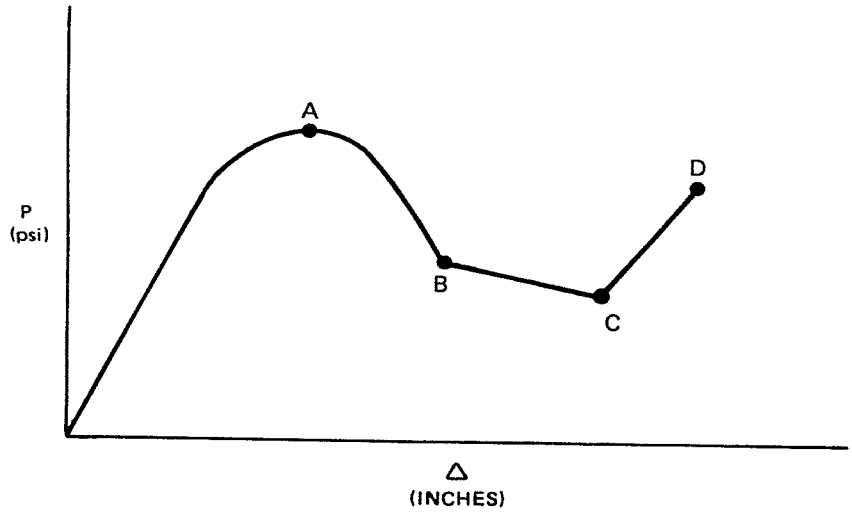

Figure 10. General Midspan Load-Deflection Curve