Australian Government
Department of Defence
Defence Science and
Technology Organisation

On Stability and Control of Hypersonic Vehicles

Colin C. Coleman and Farhan A. Faruqi

Weapons Systems Division
Defence Science and Technology Organisation

DSTO-TR-2358

ABSTRACT

This report has been produced in order to address aerodynamic characteristics and stability and control issues relating to hypersonic vehicles that are deemed to be significantly different from those of the conventional (subsonic or supersonic) air vehicles. In particular we have addressed issues that are relevant to stability and control of hypersonic vehicles. This report should add to the existing knowledge of missile guidance and control engineers and make, other researchers and engineers involved in hypersonic experimentation, aware that these vehicles may not be dynamically stable and require active control augmentation in order to achieve and maintain desirable flight characteristics.

RELEASE LIMITATION

Approved for public release

Published by

Weapons Systems Division
DSTO Defence Science and Technology Organisation
PO Box 1500
Edinburgh South Australia 5111 Australia

Telephone: (08) 8259 5555
Fax: (08) 8259 6567

© Commonwealth of Australia 2009
AR-014-663
November 2009

APPROVED FOR PUBLIC RELEASE

On Stability and Control of Hypersonic Vehicles

Executive Summary

Hypersonic flight presents major challenges to airframe and control system designers. High velocity can cause a hypersonic vehicle to be highly sensitive to changes in flight conditions that can result in instability or weakly damped transient oscillations of the airframe. The design problem is further compounded by the fact that hypersonic aerodynamic parameters, as predicted from ground tests or theoretical computational methods, do not reflect the actual flight parameters; there are significant uncertainties in the parameter values required for airframe and control system design. Conventional techniques do not always lead to a design that is stable and at the same time robust to parameter uncertainties. From the reported work in hypersonic vehicle stability and control, we are able to highlight aerodynamic characteristics that may have a strong bearing on our approach to the analysis, synthesis and performance evaluation of hypersonic weapons systems. The key findings and recommendations are as follows:

- Active control will be required to maintain stability in case of changes to the CG position and maintain adequate damping during flight.
- Uncertainties in aerodynamic parameters require a control system design based on robust techniques. Adaptive control techniques may be required to maintain desirable vehicle flight performance.
- At hypersonic speeds the drag and lift forces become non-linear functions of the angle of attack. Compared to subsonic and supersonic speeds, the maximum value of the lift / drag ratio for hypersonic vehicles is significantly lower.
- Heating has a negative affect on vehicle structural integrity and, depending on the airframe, may cause structural vibration which needs to be catered for by an appropriate control system design.

Authors

Dr. Colin C. Coleman
Weapons Systems Division

Colin Coleman holds a Bachelor of Science in Theoretical Physics and Doctor of Philosophy in Astrophysics. Following an early career in extragalactic astrophysics in the UK and Italy, he took a lecturer position at Monash University, Australia. In 1990 he joined the then Guided Weapons Division of DSTO to work on the performance evaluation of guided missiles. Subsequently he was appointed to head of the Guidance and Control Group and the RF Seekers Group, before undertaking a posting to the US as the Defence Science Attaché in Washington DC. Upon his return to Australia in 2002 he rejoined Weapons Systems Division as the Research Leader for Maritime Weapons, and subsequently the Research Leader for Air Weapon Systems. In this role he is also responsible for providing scientific leadership to the modelling, simulation and analysis branch of Weapons Systems Division.

Dr. Farhan A. Faruqi
Weapons Systems Division

Farhan A. Faruqi received B.Sc.(Hons) in Mechanical Engineering from the University of Surrey (UK), 1968; M.Sc. in Automatic Control from the University of Manchester Institute of Science and Technology (UK), 1970 and Ph.D from the Imperial College, London University (UK), 1973. He has over 25 years experience in the Aerospace and Defence Industry in UK, Europe and the USA. Prior to joining DSTO in January 1999 he was an Associate Professor at QUT (Australia) 1993-98. Dr. Faruqi is currently the Head of the Guidance and Control Group, Weapons Systems Division, DSTO. His research interests include: Missile Navigation, Guidance and Control, Target Tracking and Precision Pointing Systems, Strategic Defence Systems, Signal Processing, and Optoelectronics.

Contents

1. INTRODUCTION 1

2. AERODYNAMIC STATIC STABILITY 2

3. EFFECT ON STABILITY DUE TO SHIFT IN CG POSITION 7

4. HYPERSONIC FLIGHT STABILITY AND CONTROL ISSUES 8

5. HYPERSONIC AERODYNAMIC MODEL FOR CONTROL ANALYSIS AND SYNTHESIS 14

6. CONTROL EFFECTORS OPTIONS 15

7. CONCLUSIONS 18

8. REFERENCES 20

APPENDIX A: HYPERSONIC VEHICLE EXAMPLE: 23

APPENDIX B: HYPERSONIC LONGITUDINAL DYNAMIC MODEL 25

Nomenclature

M# :	Mach number
α :	Angle of attack
γ :	Flight path angle
$\theta = \alpha + \gamma$:	Total body angle
C_P :	Centre of pressure
C_G :	Centre of gravity
L :	Aerodynamic lift force
D :	Aerodynamic drag force
T :	Thrust force
M :	Aerodynamic (pitching) moment
V :	Vehicle velocity along the flight path
W :	Vehicle weight
C_M :	Moment Coefficient
q^* :	Dynamic pressure
S :	Characteristic aerodynamic area
c :	Characteristic aerodynamic chord length
ρ :	Air density
C_L :	Lift coefficient
x_{CP} :	Distance of C_P from the nose
x_{CG} :	Distance of C_G from the nose
x_{SM} :	Static margin
$C_{L\alpha} = \frac{\partial C_L}{\partial \alpha}$	Derivative of the lift coefficient
$C_{M\alpha} = \frac{\partial C_M}{\partial \alpha}$	Derivative of the lift coefficient
T_{x_w} :	x_w – component of the thrust vector
T_{z_w} :	z_w – component of the thrust vector
m :	Vehicle mass
g :	Earth's gravity

q_w :	Flight path rotation rate about the y_w -axes
q_w^e :	Earth's rotation projected along the y_w -axes
q :	Vehicle pitch rate about the body y -axes
I_{yy} :	Vehicle body moment of inertia about its y -axes
(O_w, x_w, z_w) :	x, z coordinates of the wind-axes system
(O_v, x_v, z_v) :	x, z coordinates vehicle-axes system
$(variable)_0$:	Value of a variable at a given operating condition
$\delta(variable)$:	Deviation of a variable about a given operating condition
λ :	Earth latitude
μ :	Earth longitude
η :	Vehicle control deflection

1. Introduction

Hypersonic flight presents major challenges to airframe and control system designers. High velocity can cause a hypersonic vehicle to be highly sensitive to changes in flight conditions (Mach Number M#, and angle of attack α) that can result in instability or weakly damped transient oscillations of the airframe. The design problem is further compounded by the fact that hypersonic aerodynamic parameters, as predicted from ground tests or theoretical computational methods, do not reflect the actual flight parameters; there are significant uncertainties in the parameter values required for airframe and control system design. Consequently, conventional techniques do not always lead to a design that is stable and at the same time robust to parameter uncertainties.

It appears that a key reason for instability at hypersonic speeds is that the centre of pressure C_P position (without active control) remains constant irrespective of the angle of attack, M# and altitude. Hence, stability augmentation due to moment arm effect through shift in C_P position (as in the case of subsonic and low supersonic speeds) does not occur at hypersonic speeds. Thus without active control a hypersonic vehicle is likely to be lightly damped or even unstable. Active control provides for stability and rapid damping of the transients (following a disturbance) by changing the C_P position in a controlled fashion. In fact, active control can often make a vehicle stable even when the static stability margin indicates instability.

With uncertain aerodynamics and the fact that C_P position remains fixed, it is clear that a hypersonic vehicle would require an active and robust (insensitive to parameter uncertainties) control to accomplish stable sustained flight. Moreover, if a hypersonic vehicle is expected to demonstrate desirable flight qualities over a large flight envelope (in terms of M# and altitude) then an adaptive control scheme needs to be implemented.

Because of the engineering difficulty and performance costs associated with conventional aerodynamic control of hypersonic vehicles, several alternative approaches have been proposed based on solely internal systems. One of these is a moving mass intended to effect control by shifting the centre of gravity (C_G) position axially and laterally. However, the extent, speed and precision of movements of the weights may not be sufficient to confer stability nor indeed provide the control required to maintain the angle of attack at a value to achieve the desired lift force. Moreover, precision control of angle of attack is necessary for many high speed air-breathing propulsion systems to operate satisfactorily.

In this report static stability and C_P position issues are addressed through simple analysis to highlight some of the key features of hypersonic aerodynamics. The inadequacy of conventional control design techniques for a hypersonic vehicle control is pointed out. Also included is a section on control effectors (fins, canards, thrust vectoring etc) that are commonly used in conventional missiles and have been proposed for a number of future hypersonic vehicles.

Analysis and design of a hypersonic vehicle with active control is based on the longitudinal and/or lateral dynamics model. A longitudinal plane dynamic model for a hypersonic

airframe has been derived in this report along with a linearised (small perturbation) model in state space form. This model can be extended to include structural vibration effects as well as interaction with engine dynamics for an air breathing propulsion system.

2. Aerodynamic Static Stability

According to (Etkin B and Reid LD; 1996), "An airplane can continue in steady un-accelerated flight only when the resultant external forces and moments about CG both vanish. This is the condition of longitudinal balance. If the pitching moment were not zero, the airplane would experience a rotational acceleration component in the direction of the unbalanced moment." This situation is depicted in Figure 1.

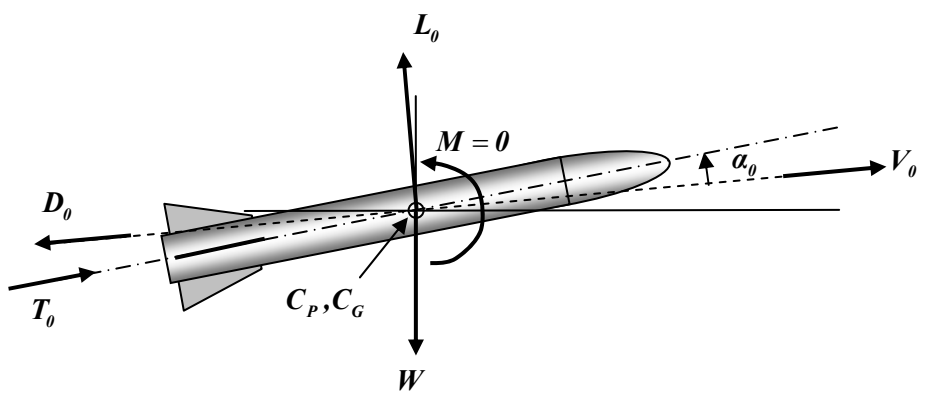

Figure 1: Aerodynamic forces & moments for steady sustained flight

Traditionally 'static margin' has been used as a measure of an air vehicle's stability. This criterion implies that the centre of pressure C_P lie behind (as measured from the nose) the centre of gravity C_G. It should, however, be noted that while this will give stability it will not guarantee steady sustained (or level) flight. The latter requires that there should be a positive angle of attack α, and that this should be maintained during a steady flight, in order to achieve lift to balance the weight of the vehicle. This condition known as 'trim' typically requires the application of a control force through an appropriate fin deflection, creating a positive angle of attack and a shift in C_P position to a location relative to C_G such that the resultant moment about C_G is zero. If C_P is above C_G then it can be shown that steady sustained flight may be achieved with C_P behind C_G as shown in Figure 2 (compare this with Figure 1.).

The position of C_P (defined as the point at which total lift and drag forces act) does not remain fixed. In fact (Garnell P and East DJ, 1977) notes that: "It is seen that at subsonic speeds

and very low supersonic speeds the C_P tends to be rather more forward than at higher Mach numbers. Also the changes in C_P with incidence can be considerable at low speeds; this is mainly due to general rearwards shift in the C_P of the body with increasing incidence, the C_P of the control surfaces and wings changing very little".

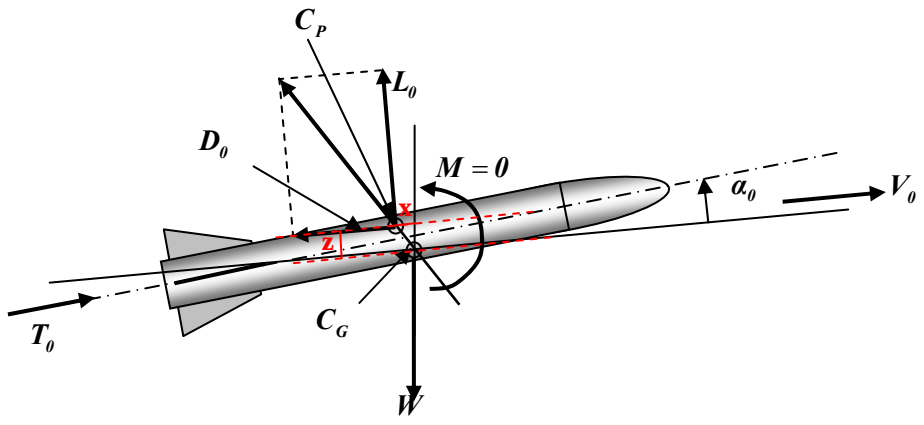

Figure 2: Aerodynamic forces & moments for steady sustained flight for C_P above C_G.

A plot of the C_P position as a function of the angle of attack and M#, for a fin controlled missile, is given in Figure 3. The C_P position, moves aft when angle of attack α increases, and moves forward when the angle of attack α decreases; in addition, the lift force also increases with increasing α. This produces a restoring moment that counters the increase in α and is the very phenomenon that makes stable sustained flight possible. This shift in the C_P position as a function of α, occurs mainly in the subsonic and transonic regimes but is negligible at high supersonic and hypersonic speeds.

Figure 4 shows a typical plot for of the pitching moment coefficient, about C_G for a fixed elevator, versus the angle of attack α; here: $\left(M = C_M q^* Sc\right)$, and $q^* = \left(\frac{1}{2}\rho V^2\right)$ is the dynamic pressure. Note also, that the lift force is given by: $\left(L = C_L q^* S\right)$, and the angle of attack is measured w.r.t to the zero lift line of the vehicle.

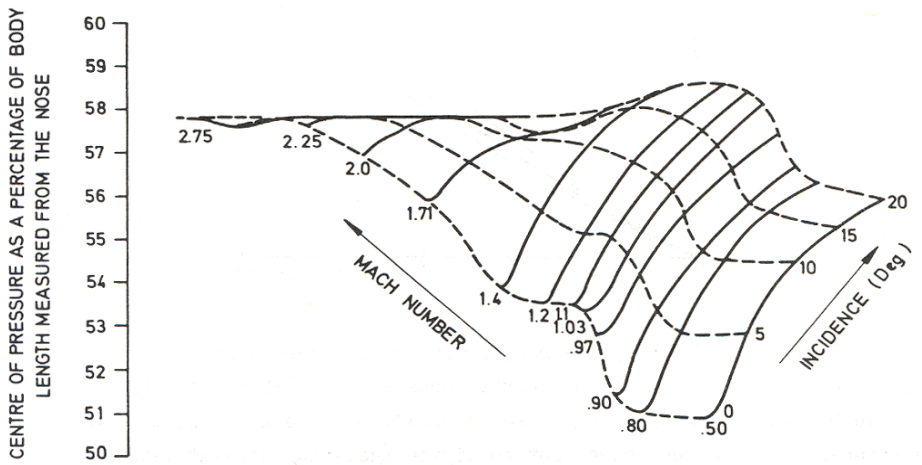

Figure 3: C_P *position variations with angle of attack and M#.(Reproduced from Garnell and East)*

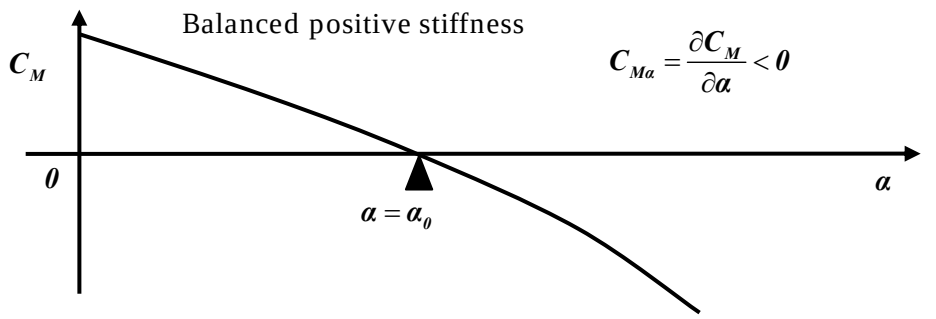

Figure 4: Pitching moment about the vehicle C_G

For this case if a disturbance causes α to suddenly <u>increase</u> from its nominal value α_0 then the <u>negative moment</u> (due to aft movement of C_P and an increase in C_L) – a condition for positive stiffness acts to restore α to its nominal value. Similarly a sudden disturbance in the <u>opposite</u> direction induces a <u>positive moment</u> (due to forward movement of C_P and a decrease in C_L) that acts to restore stability. It is assumed that the velocity of the vehicle remains unaltered during these transient disturbances. Key conditions for stability are:

$$C_M\Big|_{\alpha=\alpha_0} = 0;\ C_{M_\alpha} = \frac{\partial C_M}{\partial \alpha} < 0 \qquad (1)$$

The moment is taken to be positive in the direction shown in Figure 1, and $\alpha = \alpha_0$ defines the equilibrium angle of attack for that steady flight condition. Note, also, that <u>asymptotically</u> stable flight is achieved, following a disturbance, provided there is sufficient aerodynamic damping.

We now consider the role that the centre of pressure plays during the transient behaviour of the vehicle. In figure 5, the positions of C_p and C_G are shown measured in terms of their respective distances x_{CP}, x_{CG} from vehicle's nose. The moment (about *CG*) equation may be written as (for small α):

$$M = M_0 - L\left(x_{CP} - x_{CG}\right) \tag{2}$$

Or equivalently, in terms of the moment and lift coefficients C_M, C_{M0}, C_L respectively, equation (2) may be written as:

$$C_M = C_{M0} - \frac{1}{c} C_L \left(x_{CP} - x_{CG}\right) \tag{3}$$

C_{M0} is the pitching moment independent of α. For M# less than approximately 5 (McCormick BW, 1994; Miele A, 1962), $C_L = C_{L\alpha}.\alpha$, Thus:

$$C_M = C_{M0} - \frac{1}{c} C_{L\alpha}.\alpha.\left(x_{CP} - x_{CG}\right) \tag{4}$$

For steady flight condition $\alpha = \alpha_0 ; x_{CP} = x_{CP0} ; C_M = 0$, that is:

$$C_{M0} = \frac{1}{c} C_{L\alpha}.\alpha_0.\left(x_{CP0} - x_{CG}\right) \tag{5}$$

$x_{SM} = \left(x_{CP} - x_{CG}\right)$ will be referred to as the 'static margin'. Partial differentiation of equation (4) w.r.t α, we get:

$$\mathrm{C}_{\mathrm{M}\alpha} = -\frac{1}{\mathrm{c}} \mathrm{C}_{\mathrm{L}\alpha} \left\{ \left(x_{CP} - x_{CG}\right) + \alpha \frac{\partial x_{CP}}{\partial \alpha} \right\} \tag{6}$$

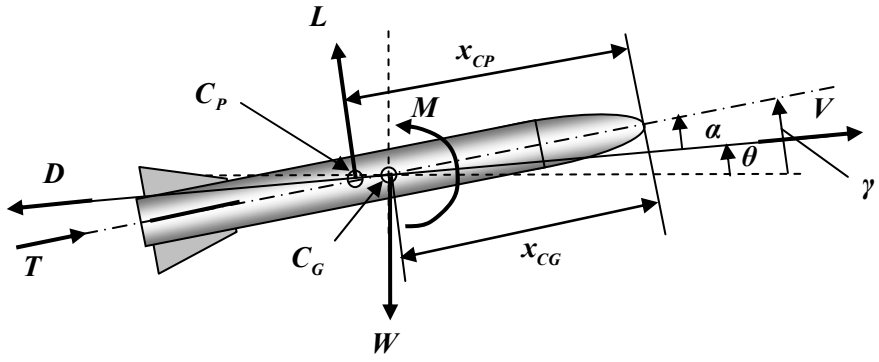

Figure 5: C_p *and* C_G *positions and their role in vehicle stability*

Using equation (1), we get conditions for stability as:

$$C_{M\alpha} = -\frac{1}{c} C_{L\alpha} \left\{ \left(x_{CP} - x_{CG} \right) + \alpha \frac{\partial x_{CP}}{\partial \alpha} \right\} < 0 \qquad (7)$$

➔

$$\left(x_{CP} - x_{CG} \right) + \alpha \frac{\partial x_{CP}}{\partial \alpha} > 0 \qquad (8)$$

a. Thus, if $\frac{\partial x_{CP}}{\partial \alpha} = 0$ (e.g. hypersonic flight), then conditions for stability imply that: $x_{CP} > x_{CG}$ i.e. C_p must be aft of C_G for the vehicle to remain stable.

b. However, if $\frac{\partial x_{CP}}{\partial \alpha} > 0$, (e.g. subsonic or transonic flight or active controlled flight), then conditions for stability imply that $x_{CP} > x_{CG} - \left| \alpha \frac{\partial x_{CP}}{\partial \alpha} \right|$. In this case steady and stable flight is achievable with zero or negative static margin.

3. Effect on Stability Due to Shift in CG Position

It was noted in Section 2 that as the M# increases the shift in the C_p due to changes in the angle of attack becomes progressively smaller and is negligible at high M#. (Ostapenko NA, 1980) notes that for high supersonic flow: ”The theoretical investigation of the aerodynamic characteristics of circular cones has shown that their centre of pressure does not depend on the angle of attack when the shock wave is attached to the apex of the cone. It was established experimentally for star-shaped bodies that the position of the centre of pressure for such bodies hardly changes in a wide range of Mach numbers and angles of attack”. In view of this and other published research, it will be assumed that C_p position remains constant at hypersonic speeds irrespective of M# and angle of incidence.

Let us now consider the case where the C_G position suddenly moves aft, causing a positive moment to occur and the vehicle angle of attack to increase from its equilibrium value α_0. At low M# the aft movement of C_P and increase in C_L acts to restore vehicle stability about a new equilibrium angle of attack α_1. However, at high M# the aft shift of C_P position does not occur and increase in C_L may not be sufficient to restore stability. In this case the vehicle could become unstable and topple over unless active controls are available. Active control also allows an air vehicle to achieve new trim conditions to counter changes in C_G.

One obvious way to avoid instability is to design the vehicle with C_G significantly forward of the C_P (large static margin); however this would make the vehicle sluggish in responding to demands in attitude and flight path changes - a characteristic not very desirable for some applications. Even with large static margin, however, active control will still be required to achieve steady sustained flight.

Unlike subsonic and supersonic vehicles, the stability of hypersonic vehicles (utilising active control) cannot be assessed purely from static margin alone. In fact, as stated in a study by (Johnson DB, Thomas R, and Manor D; 2001): “Static margin has been the standard indicator of longitudinal stability for many years. However, experience with previous air vehicles flown with significant levels of static instability indicated that the conventional static margin is not a valid indicator for these vehicles. In one case, 30% unstable was flyable, while in another 15% unstable was completely unacceptable”. That is, in certain cases, the hypersonic vehicle with active control was stable although the static margin indicated instability.

4. Hypersonic Flight Stability and Control Issues

Hypersonic vehicle aerodynamics and its longitudinal stability and control characteristics have been studied by a number of authors. For example: aerodynamic flow characteristics of a hypersonic glide vehicle (M#>5) was considered by '(Miele A; 1962)'. The main characteristics of this flow are that:

a. The shock waves originating at the leading edge of the body lie close to the body so that the interaction with the body is strong.
b. High temperatures exist in the regions between the shock waves and the body and it may be necessary to consider real gas effects (molecular vibration, dissociation, and ionisation) when analysing the flow fields.
c. At very high M#, the shock waves may be assumed to be almost identical to the body, at least at the front portion of the body, and the molecules crossing the shock waves conserve the tangential component of the velocity but lose most of the normal component.

In view of the above, a possible design of a glide vehicle operating at high M# would have to be a compromise between aerodynamic and heat transfer requirements. For example, the glide vehicle could have lifting surfaces with planar edges and a nose that is blunt. Aerodynamic lift and drag coefficients: C_L, C_D; zero lift drag coefficient C_{D0}; aerodynamic efficiency $E_{max} = \left(\frac{C_L}{C_D}\right)_{max}$; the induced drag factor K, and the exponent n (as defined in equation 10 below) are depicted in Figure 6.

It is clear that key differences exist between subsonic/ supersonic and hypersonic aerodynamic characteristics. For example, for a supersonic vehicle 1.2< M# < 5, the lift and drag coefficients are given by '(Etkin B and Reid LD; 1996)':

$$C_L = C_{L\alpha}\alpha \tag{9}$$

$$C_D = C_{D_0} + KC_L^{\,n} \tag{10}$$

The value of $n = 2$ for M#<5, and the three constants C_L, C_{D0}, K are functions of the configuration, thrust coefficient and M#. Whereas for a hypersonic vehicle M#>5, $n = \frac{3}{2}$, we get:

$$C_L = \left(\frac{1}{2}C_{N\alpha}\sin 2\alpha + C_{N\alpha\alpha}\sin\alpha\left|\sin\alpha\right|\right)\cos\alpha \tag{11}$$

$$C_D = C_{D_0} + KC_L^{\frac{3}{2}} \tag{12}$$

Here $C_{N\alpha} = \left(C_{L\alpha}\big|_{\alpha=0}\right), C_{N\alpha\alpha}$ are coefficients (independent of α) dependent on M# and configuration. For $0 < \alpha < 180^o$:

$$C_{L\alpha} = C_{N\alpha}\left(\cos^3\alpha - 2\sin^2\alpha\cos\alpha\right) + C_{N\alpha\alpha}\left(2\sin\alpha\cos^2\alpha - \sin^3\alpha\right) \tag{13}$$

For small values of the angle of attack α, equations (11)-(13) may be written as:

$$C_L \cong \left(C_{N\alpha}\alpha + C_{N\alpha\alpha}\alpha^2\right) \tag{14}$$

$$C_{L\alpha} = C_{N\alpha}\left(1 - 2\alpha^2\right) + C_{N\alpha\alpha}\left(2\alpha - \alpha^3\right) \tag{15}$$

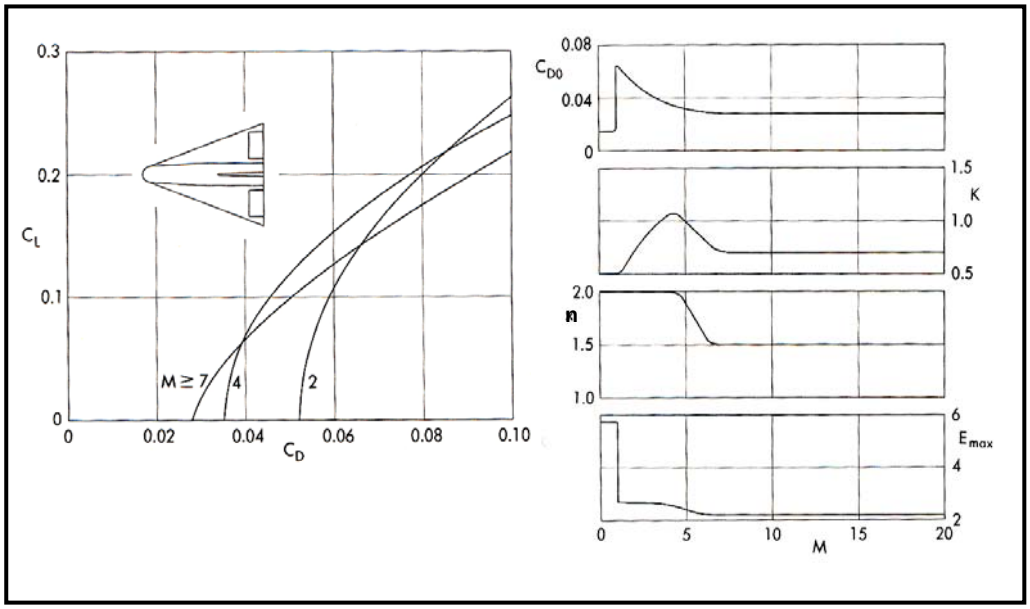

Figure 6: Aerodynamic characteristics of a hypervelocity glider ('Miele; 1962')

It is also noteworthy (Miele A; 1962) that the maximum value of the ratio ***L/D*** is equal to 5-10 for supersonic vehicles and only about 1-5 for hypersonic vehicles. Also, unlike supersonic vehicles the lift and drag coefficient remain constant for hypersonic vehicles for M#> 6.

A numerical example (Etkin B, 1972), with parameters given in Appendix 1, is used to demonstrate typical forces and moments characteristics of a hypersonic vehicle. Values of $C_L, C_D, C_{L_\alpha}, C_{D_\alpha}$ for this example are plotted in Figures 7(a)-(d) for both exact and approximate values of the various parameters; it is seen that the approximation is valid for small values of angle of attack $\alpha \le 12^o$.

Static stability analysis can be conducted for this example; since C_L is now a nonlinear function of α, equations (3) - (7) may be used to compute the static stiffness curve. Ignoring the shift in the C_P (the last term in equation (7)), the following values are obtained (see Appendix 1):

α_0 (deg)	x_{SM} (m)	C_{M0} (Nm)	$C_{M\alpha}$ (Nm)
10.0	1.445	0.00493	-0.095 $C_{L\alpha}(\alpha)$

Figure 8 is the plot of static stability characteristic of the vehicle in the example; it shows that the vehicle is statically stable with positive stiffness.

While the above analysis might suggest that the vehicle will be stable without any active controls, however, aerodynamic design based on static analysis alone is unreliable and a more comprehensive analysis is necessary using the dynamic model for hypersonic vehicle considered later in this report.

Several authors have reported that there is significant disparity between the wind tunnel data (aerodynamic coefficients) and predictions based on this, as compared to the actual flight data (Iliff KW and Shafer MF; 1993). Figure 9 shows a plot of the actual (obtained from flight tests) C_P position and the predicted values (obtained from ground tests). Clearly in order to ensure acceptable aerodynamic performance of a hypersonic vehicle, there is a need to have an active control and this has to be robust enough to cater for uncertainties in the predicted and / or computed aerodynamic design parameters.

A control system based on moving the centre of gravity (i.e. moving internal weights) still uses lift and drag forces to produce the required control moments. However, it may be difficult to achieve rapid changes in the moments that are needed to give fast enough control response. The use of this mechanism to achieve stable and steady sustained flight at hypersonic speeds, apart from obvious engineering difficulties may not necessarily achieve the demonstration objective. In fact, various reported studies on stability and control indicate that a hypersonic vehicle tend to be unstable and require active control to achieve desirable transient properties (McLaen D et.al.; 2007).

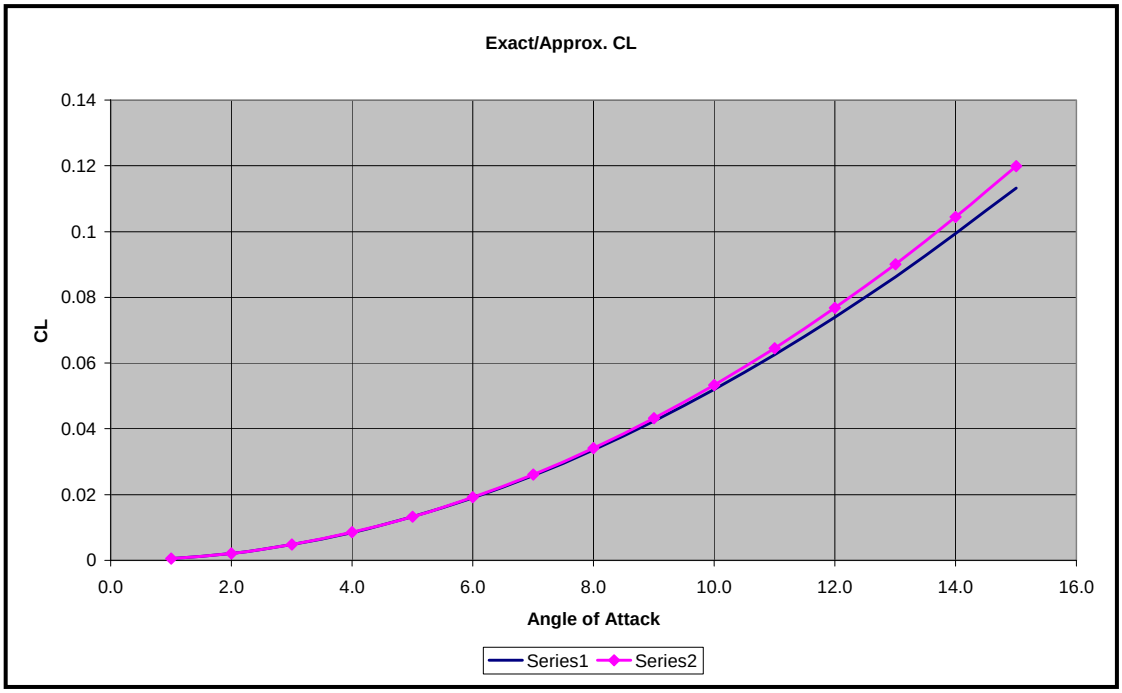

Figure 7a: Exact and approximate (series 2) lift coefficient C_L

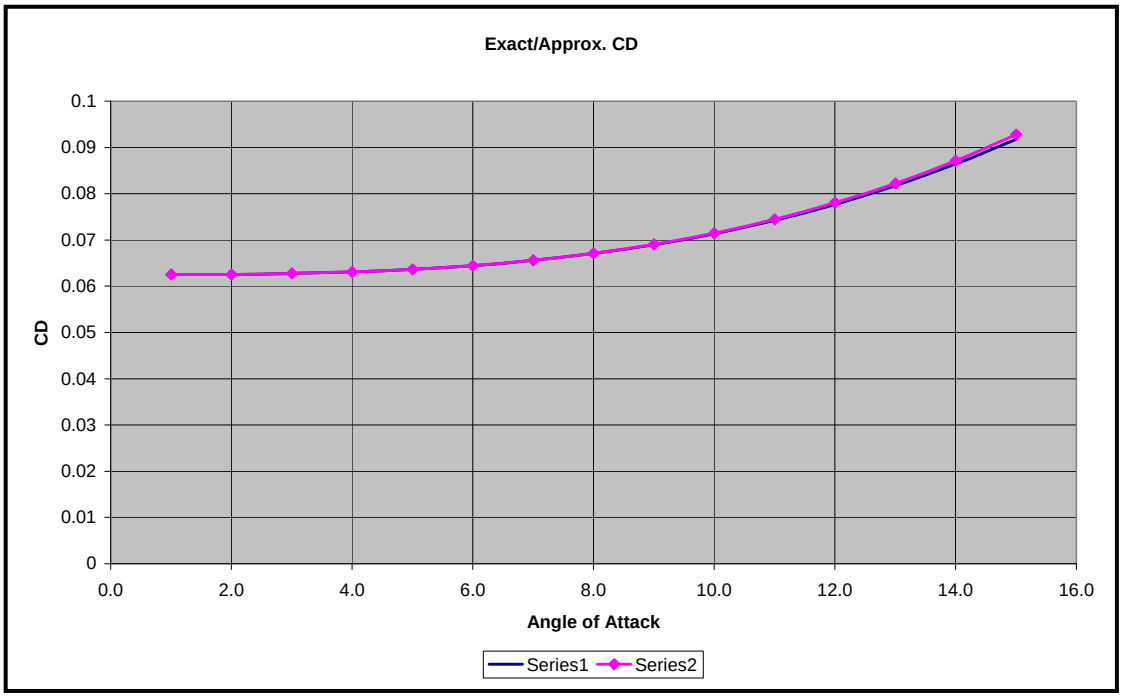

Figure 7b: Exact and approximate (series 2) drag coefficient C_D

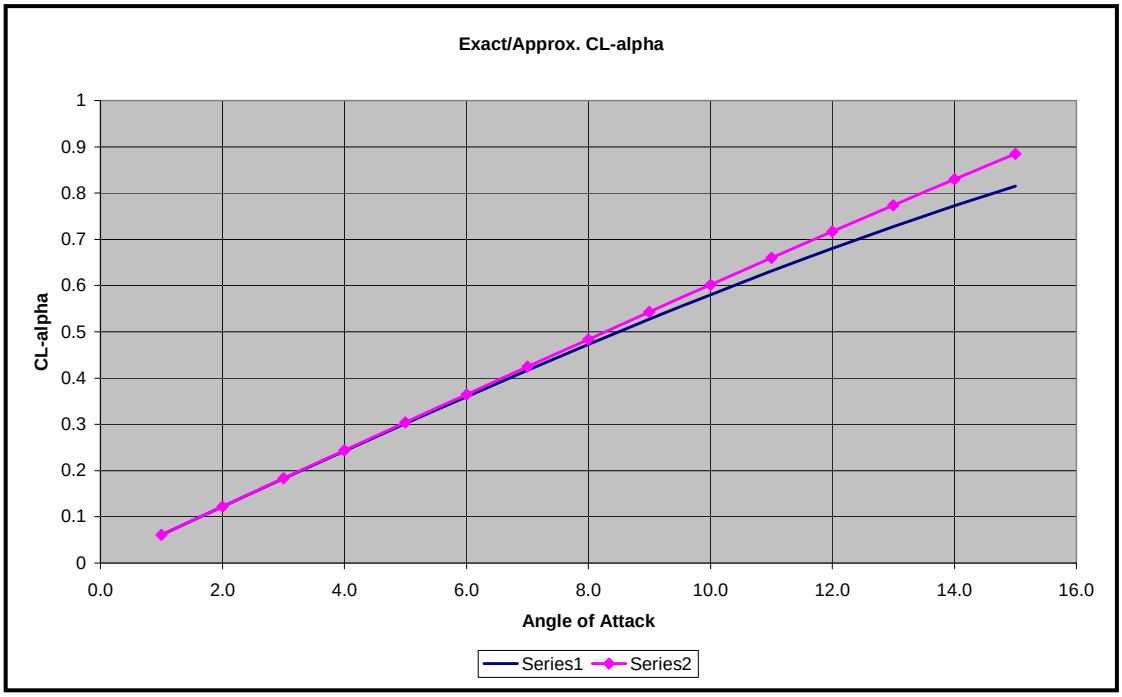

Figure 7c: Exact and approximate (series 2) the coefficient $C_{L\alpha}$

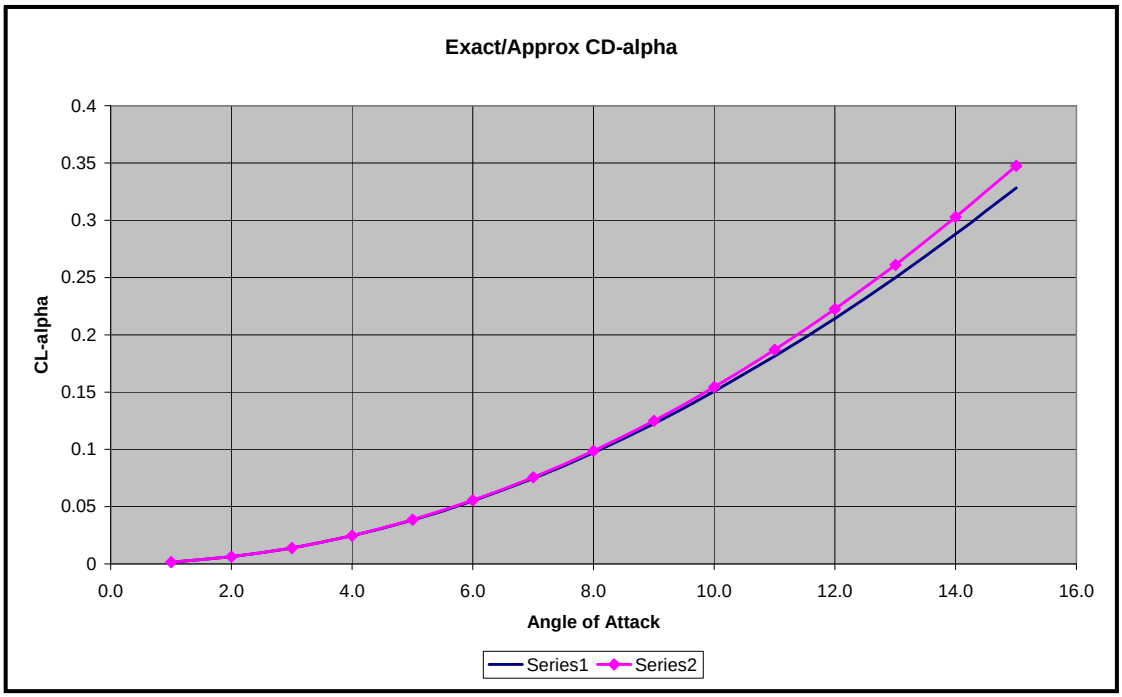

Figure 7d: Exact and approximate (series 2) the coefficient $C_{D\alpha}$

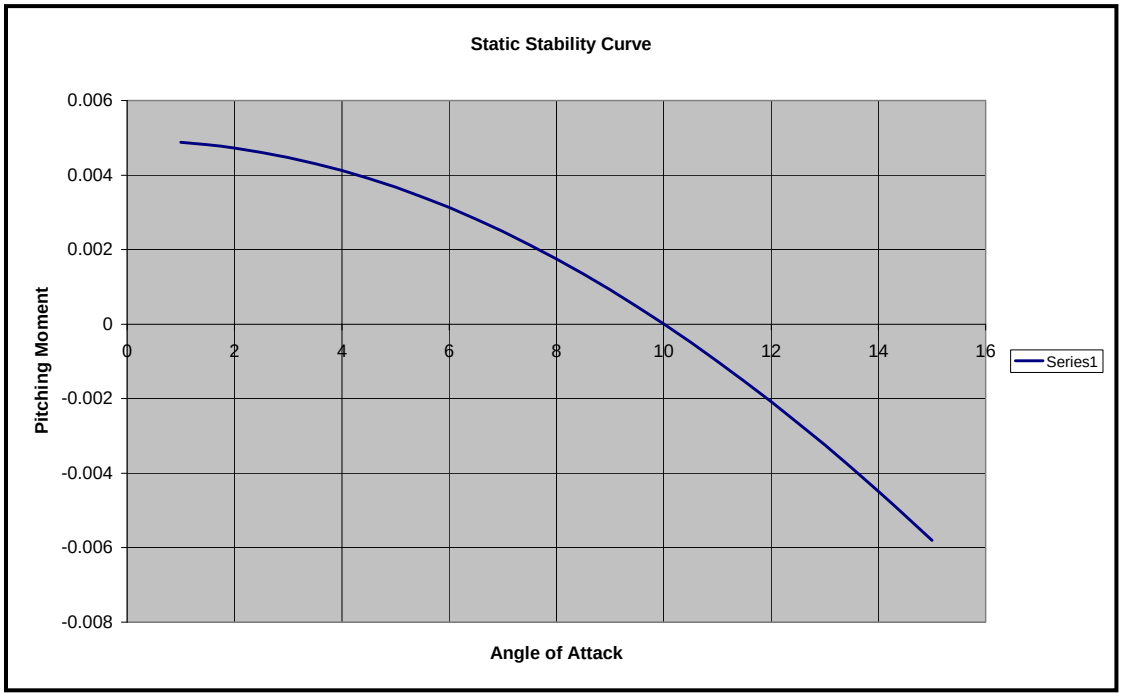

Figure 8: Static stability plots C_M *against* α

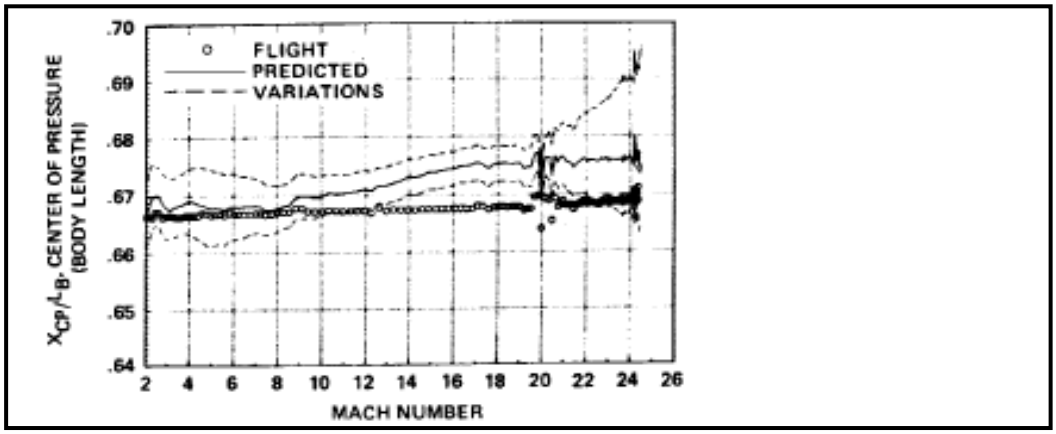

Figure 9: The STS longitudinal aerodynamic Centre of Pressure location comparison ('Romere PO and Miles AW, 1983')

5. Hypersonic Aerodynamic Model for Control Analysis and Synthesis

In this section we consider the longitudinal dynamical model for a hypersonic vehicle that is employed for stability and control analysis and synthesis. A small perturbation model (linearised model) is also considered. These models may be used to study the stability behaviour for changing flight conditions and for control sensitivity and robustness studies.

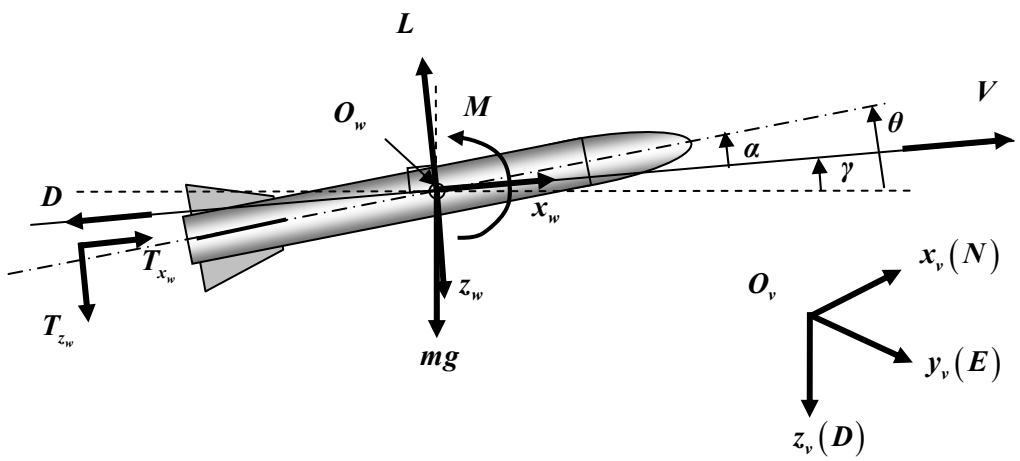

Figure 10: Vehicle forces & moments in wind axes

The longitudinal force and moment equations (see Figure 10) for a hypersonic vehicle are derived in Appendix -1, equations (A-2.10)-(A-2.14), these are reproduced here, for convenience. These equations define the non-linear longitudinal model that is used for analysis and synthesis of stability and control of a hypersonic vehicle:

$$\frac{d}{dt}V = \frac{T_{x_w} - D}{m} - g\sin(\theta - \alpha) \tag{16}$$

$$\frac{d}{dt}\alpha = \frac{T_{z_w} - L}{mV} + \frac{g\cos(\theta - \alpha)}{V} - \omega^e + q \tag{17}$$

$$\frac{d}{dt}q = \frac{M}{I_{yy}} \tag{18}$$

$$\frac{d}{dt}\theta = q + \omega^e + \frac{V\cos(\theta - \alpha)}{R} \tag{19}$$

$$\frac{d}{dt}R = V\sin(\theta - \alpha) \tag{20}$$

These equations are similar to those presented by (Bolander M, 2009); (Bilimora K and Schmidt D; 1995; Groves KP, et. al., 2005) except for the definition of the pitching moment $\boldsymbol{q}$ used in the current report; the pitching moment $\boldsymbol{Q}$ used by the above authors is equivalent to: $\boldsymbol{Q} = \boldsymbol{q} + \boldsymbol{\omega}^e + \dot{\boldsymbol{\mu}}$. These authors neglect earth's rotation and also assume that $\ddot{\boldsymbol{\mu}} = \boldsymbol{0}$.

The linearised longitudinal model (small perturbation model) has also been derived in Appendix-1, equation (A-31), and may be used for steady-state stability analysis and control system synthesis. Both the non-linear and the linearised model require knowledge of the aerodynamic parameters (lift, drag, and moment coefficients). These parameters can be obtained either via theoretical models (Anderson JD, 2006) or experimentally through ground (wind tunnel) testing. Because of the lack of availability of actual flight data, the parameters used in the model are predicted values and may have significant uncertainty attached to them. Hence the various techniques that have been suggested for control system design generally utilise robust or adaptive control techniques to allow for parameter variations and uncertainty (Faruqi FA and Jijoong K, 2009; Jankovsky P et. al. 2007).

Hypersonic flight control requires a high degree of precision, and in many cases even greater than for a conventional aircraft. In addition, the control system needs to allow for physical effects such as heating that may cause damage to wiring and electronics, sensor degradation, structural distortion and erosion of control surfaces. Methods of cooling and insulation have been suggested that may mitigate these problems. In the case of an air-breathing (Ramjet or Scram-jet) moment and force interaction between the engine and airframe becomes an important consideration and methods have been proposed for including these effects in the vehicle dynamics (Bolander M, 2009).

From a navigation and guidance perspective, our past experience suggests that for a hypersonic vehicle (as for the case of a supersonic or subsonic vehicle), a suite of inertial sensors (IMU), GPS and other sensors (e.g. magnetometers, visual imaging sensors) will be required to obtain data, such as: position, velocity and attitude for navigation. If the vehicle is required to guide to a target then seeker data, such as: target range and range rate, target LOS angle and rates, look angle and rates are also required. Issues that must be addressed include: sensor accuracy, data rate, sensor placement in the airframe and airframe structural vibration and heating effects. The latter aspect is particularly relevant to seeker radome design.

6. Control Effectors Options

Hypersonic airframe configuration and design requires an understanding of the flow-fields that exist around the vehicle, the heat transfer, and stability and control issues. In addition, since high lift / drag ratios are not achievable at hypersonic speeds, a parameter optimisation approach is generally used to identify the desired airframe and control configuration (Bowcutt, KG., Anderson, J D., and Capriotti, D, 1987). Most of the reported designs of hypersonic vehicles have been confined to the wave-rider and this has incorporated rudder and combined elevator and aileron (at the rear) as control surfaces (Cockrell CE et.al., 1995).

When designing a hypersonic vehicle, however, it is necessary to consider various other control effector options such as canards and / or thrust vectors. For example: proposed control method for HyStrike (High Speed Strike Missile) and Fast Hawk (M#4, Low Cost Missile System – LCMS) is TVC achieved through body bending (Figure 11); the HiFly (Hypersonic Flight Demonstrator) and Falcon (Hypersonic Cruise Vehicle) use tail control (Figures 12 and 14); the Shyfe (Sustained Hypersonic Flight Experiment) uses canard for longitudinal and lateral control (Figure 13). Boeing's proposed X51 (Hypersonic Weapons Technology Demonstrator) appears to use tail control (Figure. 15).

Tail control is probably the most commonly used form of conventional (subsonic and supersonic) missile control, particularly for longer range applications, and appears in a number of hypersonic missile concepts. This is mainly because tail control provides excellent manoeuvrability at the high angles of attack, which are needed to intercept manoeuvrable aircraft. Missiles using tail control may also be fitted with fixed wings or strakes to increase lift and improve range.

Canard control has been used in some conventional missiles, particularly short-range air-to-air missiles, and has been proposed for Shyfe. The key advantage of canard control is that it provides better manoeuvrability at low angles of attack, but canards tend to become ineffective at high angles of attack because of flow separation that causes the canard to stall. Since canards are ahead of the centre of gravity, they cause a destabilising effect and require large fixed tails to keep the missile stable. The fins usually provide sufficient lift to make wings unnecessary. One way of avoiding canard from stalling is to have double or split canard (two sets of canards in close proximity, usually one immediately behind the other). In the split canard configuration, the first canard set is fixed while the second set is movable. The first set of canards generates strong, vortices that increase the speed of the airflow over the second set of canards making them more effective.

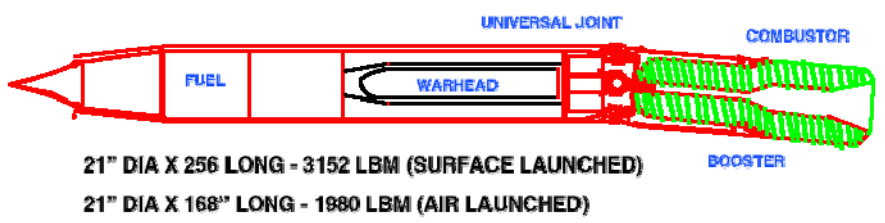

Figure11: HyStrike (High Speed Strike Missile)

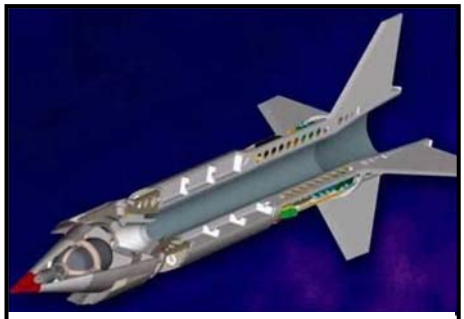

Figure 12: HiFly (Hypersonic Flight) Demonstrator)

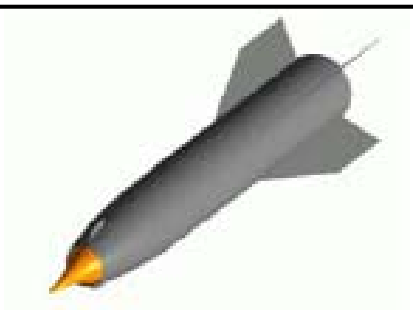

Figure 13: Shyfe (Sustained Hypersonic Flight Experiment

Figure 14: Falcon (Hypersonic CruiseVehicle)

Figure 15: The X-51A, run by the US Air Force and DARPA (Illustration: Boeing)

In addition, the vortices delay flow separation and allow the canards to reach higher angles of attack before stalling. The canards also tend to interact with the fins and introduce induced roll which requires additional roll control installed in the fins.

Wing control has been used in some of the earlier conventional missile but it is becoming less common. Most missiles using wing control are longer-range. The key advantage of wing control is that the deflections of the wings produce a very fast response with little motion of the body. This feature results in small seeker tracking error and allows the missile to remain

locked on target during large manoeuvres. The main disadvantage is that the wings must usually be quite large in order to generate both sufficient lift and control effectiveness, which makes the missiles rather large overall. In addition, the wings generate strong vortices that interact with the fins causing the missile to roll.

Thrust vectoring is a method of deflecting the missile exhaust to generate forces and moment to cause the vehicle to manoeuvre in longitudinal and lateral direction. Another technique that is currently being investigated is the so called reaction jets control. Reaction jets are usually small ports in the surface of a missile that create a jet exhaust perpendicular to the vehicle surface and produce an effect similar to thrust vectoring. These techniques give high off-bore-sight capability to conventional missiles. The key advantage of such controls is that they can function at very low speeds or in a vacuum where there is little or no airflow to act on conventional fins. The primary drawback, however, is that they will not function once the fuel supply is exhausted. Note that most missiles equipped with reaction jets controls do not rely on these controls alone for manoeuvrability, but only as a supplement to aerodynamic surfaces like canards and tail fins.

Finally, it should be noted that some missiles have in the past used conventional controls similar to those employed by aircraft. These systems are usually referred to as bank-to-turn controls since the missile banks much like an airplane would. Another form of controls that is currently under investigation is the use of micro-flow that alters the flow field around the airframe of the vehicle and generates forces and moments sufficient to turn the vehicle in a controlled fashion. Insufficient data is currently available on this to merit serious consideration.[1]

7. Conclusions

This report has been produced in order to address aerodynamic characteristics and other issues relating to hypersonic vehicles that are deemed to be significantly different from those of the conventional (subsonic or supersonic) air vehicles, guided missiles and air-borne weapons. In particular we have addressed issues that are relevant to stability and control of hypersonic vehicles. This report should add to the existing knowledge and experience of missile guidance and control engineers and make, other researchers and engineers involved in hypersonic experimentation, aware that these vehicles may not be dynamically stable and require active control augmentation in order to achieve and maintain desirable flight characteristics.

[1] Acknowledgement: Sections 35 – 39 have relied heavily on the article by Jeff Scott at Aerospaceweb.org Ask Us - Missile Control Systems

From the reported work on hypersonic vehicle stability and control and some simple analysis presented in this report, we are able to highlight aerodynamic characteristics that may have a strong bearing on our approach to the analysis, synthesis and performance evaluation of hypersonic weapons systems. The key findings and recommendations are as follows:

a. Unlike subsonic and low supersonic vehicles, centre of pressure position does not change for hypersonic vehicles for changes in M#, angle of attack and altitude. Active control will be required to maintain stability particularly in case of changes to the CG position (due to fuel burn-off) and maintain adequate damping during flight.
b. It has been noted that aerodynamic parameters derived from ground tests and theoretical considerations do not reflect the actual in-flight aerodynamics at hypersonic speeds. Uncertainties in these parameters require a control system design based on robust techniques. Also, if the flight envelope (M#, altitude) is expected to vary then adaptive techniques are required to maintain desirable vehicle flight performance.
c. At hypersonic speeds the drag and lift forces become non-linear functions of the angle of attack. At the same time, following a transition phase during the transonic and supersonic speeds, the drag and lift coefficients attain constant values at hypersonic speeds.
d. Compared to subsonic and supersonic speeds, the maximum value of lift / drag ratio for hypersonic vehicles is significantly lower. For example, the maximum value of the ratio L/D is equal to 5-10 for supersonic vehicles and only about 1-5 for hypersonic vehicles. Research is on-going to explore ways of increasing this ratio.
e. Heating effects are significant at hypersonic speeds and it has been suggested that rounding of the nose and other leading edges may be required to reduce thermal gradients. Ablative material to dissipate heat has also been suggested. Heating has a negative affect on vehicle structural integrity and, depending on the airframe, may cause structural vibration which needs to be catered for by appropriate control system design.

A longitudinal plane dynamic model as well as a small perturbation model has been derived in this report. These may be used for stability analysis and control system design. The report also includes a summary of the different types of control effectors that have been used in the past on a variety of supersonic and hypersonic air vehicles. Also included are some well known airframe configurations that have been proposed for a number of current hypersonic vehicle programs. The object is to present control effector options that are available to a hypersonic vehicle designer. The preferred selection clearly depends on the operational requirement and numerous engineering considerations, and will be dictated by a multi-disciplinary team responsible for total system design and performance evaluation.

8. References

Anderson JD. *Hypersonic and High Temperature Gas Dynamics.* Second Edition, AIAA Education series (Ed. Schetz JA); 2006.

Bilimoria K and Schmidt D. Integrated Development of the Equations of Motion for Elastic Hypersonic Flight Vehicles, *Journal of Guidance, Control, and Dynamics*. Vol. 18, No.1; pp: 73-81, 1995.

Bolander M. Adaptive Guidance and Control for Software Controlled Precision Guided Weapons. *Second Technical Report of TTCP KTA 7-16*. Feb. 2009.

Bowcutt KG, Anderson, J D and Capriotti D. Viscous Optimised Hypersonic Waveriders. *AIAA Paper 87-0272*, 1987.

Cockrell CE, Huebner LD, and Finley DB. Aerodynamic Performance and Flow-Field Characteristics of Two Waverider-Derived Hypersonic Cruise Configurations. *AIAA Paper 95-0736*, 1995.

Edkin B and Reid LD. *Dynamics of Flight – Stability and Control.* John Wiley & Sons, Inc., New York 1996.

Edkin B. *Dynamics of Atmospheric Flight*. John Wiley & Sons, Inc., New York 1972.

Kim J and Faruqi F. Design of Optimal Flight Controller for a Generic Linearised Missile Model in Hypersonic Regime. *DSTO Report to be published;* 2009.

Garnell P and East DJ. *Guided Weapon Control Systems.* Pergammon Press, Oxford 1977.

Groves PK et. al. Reference Command Tracking for a Linearised Model for an Air-breathing Hypersonic Vehicle. *AIAA 2005-6144*; pp: 2901-2914, 2005.

Iliff KW and Shafer MF. Space Shuttle Hypersonic Aerodynamic and Aerothermodynamic Flight Research and the Comparison to ground Test Results. *NASA Technical Memorandum* 449; 1993.

Jankovsky P et. al. Output feedback Control and Sensor Placement for a Hypersonic Vehicle Model. *AIAA 2007-6327;* pp: 1-22; 2007.

Johnson DB, Thomas R, and Manor D. Stability and Control Analysis of a Wave-Rider TSTO Second Stage. *AIAA paper 01-1834*, pp: 1-8, 2001.

McCormick BW. *Aerodynamics, Aeronautics, and Flight Mechanics.* John Wiley & Sons Inc., New York 1994.

McLean D, Zaludin ZA and Arora PR. An analysis of the Static and Dynamic Stability of a Hypersonic Transport Aircraft Longitudinal Motion Flying at Hypersonic Speeds and Various Heights. *Jrnl. Technology*; 37(A), Dis. 2002; pp: 1-22, 2002.

Miele A. *Flight Mechanics-Vol.1. Theory of Flight Paths.* Eddison-Wesley Pub. Co., Reading, MA, 1962.

Ostapenko NA. On the centre of Pressure of Conical Bodies. *(Translation) Izvestiya Akademil Nauk SSSR, Mekhanika Zhidkosti i Gaza*; No.1, pp: 99-104; Jan-Feb, 1980.

Romere PO. and Miles AW. Space Shuttle Entry Longitudinal Aerodynamic Comparisons Of Flights 1-4 With Preflight Predictions in Shuttle Performance: Lessons Learned. *NASA Rept. CP 2283 Pt.1*; pp: 263-307, 1983.

Figures 11 to 16 reproduced from public domain web sites.

This page intentionally blank

Appendix A: Hypersonic Vehicle Example:

A hypothetical hypersonic vehicle is considered at a nominal altitude of 53 km, and a speed relative to earth of approx 7.4 km / s

Aerodynamic Parameters

$C_L = 1.75 \sin\alpha.\cos\alpha.|\sin\alpha|$

$C_D = 0.0625 + 1.69 \sin^2\alpha.|\sin\alpha|$

$C_{L\alpha} = 3.5|\sin\alpha|\cos^2\alpha - 1.75\sin^2\alpha|\sin\alpha|$

$C_{D\alpha} = 5.07\sin\alpha.\cos\alpha|\sin\alpha|$

$C_{mq} = -0.03$

$C_{m\alpha} = -0.055$

$\alpha = 10$ degrees

c = 15.25m

Approximate Values

$C_L = 1.75\,\alpha^2$

$C_D = 0.0625 + 1.69\,\alpha^3$

$C_{L\alpha} = 3.5\alpha - 1.75\alpha^3$

$C_{D\alpha} = 5.07\alpha^2$

The values given in the above tables are plotted in Figures 6(a)-(d) for both the exact and the approximate values.

We use equation (15) for calculating the static margin by setting $\alpha = 10^o$ and $\frac{\partial x_{CP}}{\partial \alpha} = 0$, that is:

$$\left(x_{CP0} - x_{CG}\right) = -\frac{c.C_{M\alpha_0}}{C_{L\alpha}\left(\alpha_0\right)} = \frac{15.25 \times 0.055}{0.5803} = 1.445m \qquad \text{(A-1.1)}$$

$$C_{M\alpha} = -\frac{1}{c}C_{L\alpha}\left(\alpha\right)\left(x_{CP0} - x_{CG}\right) = -0.095C_{L\alpha}\left(\alpha\right) \qquad \text{(A-1.2)}$$

From equation (3), we get:

$$C_{M0} = \frac{1}{c}C_L\left(\alpha_0\right)\left(x_{CP0} - x_{CG}\right) = \frac{0.05197 \times 1.445}{15.25} \qquad \text{(A-1.3)}$$
$$= 0.00493$$

This page intentionally blank

Appendix B: Hypersonic Longitudinal Dynamic Model

From Figure 9, the force and moment equations for the longitudinal motion of a vehicle in the flight path (wind axes) (Etkin B, 1972) may be written as:

$$T_{x_w} - D - mg\,sin\gamma = m\dot{V} \qquad \text{(A-2.1)}$$

$$T_{z_w} - L + mg\,cos\gamma = -mV\left(q_w + q_w^e\right) \qquad \text{(A-2.2)}$$

$$M = I_{yy}\dot{q} \qquad \text{(A-2.3)}$$

Where:

T_{x_w}: is the thrust x-component of the thrust vector.

T_{z_w}: is the thrust z-component of the thrust vector.

D: is the body drag force.

L: is the body lift force.

m: is the vehicle mass.

g: is the earth's gravity.

V: is the vehicle flight path velocity.

q_w: is the flight path rotation rate about the y_w-axes.

q_w^e: is the earth's rotation projected along the y_w-axes.

q: is the vehicle pitch rate about the body y-axes.

M: is the vehicle pitch moment about the body axes.

I_{yy}: is the vehicle moment of inertia about its y-axes.

(O_w, x_w, z_w): are the x, z coordinates of the wind-axes system (or the flight path axes system) with its x_w pointing along the vector V.

(O_v, x_v, z_v): are the x, y, z coordinates vehicle-axes system (defined as the axes system attached to the vehicle CG, and moving with it, with z_v axis point along the gravity vector. The x_v-axis is taken to point north. Note that:

$$q_w = q - \dot{\alpha} \quad ; \text{and } \theta = \gamma + \alpha \qquad \text{(A-2.4)}$$

For the purpose of stability analysis, we may assume that the vehicle is moving eastward along fixed latitude λ, say the equator (for the equator $\lambda = 0$). Earth's rotation ω^e may be included in the vehicle dynamical equations as follows:

$$\underline{\omega}_v^e = \begin{bmatrix} cos\,\lambda \\ 0 \\ -sin\,\lambda \end{bmatrix} \omega^e = \begin{bmatrix} 1 \\ 0 \\ 0 \end{bmatrix} \omega^e \qquad \text{(A-2.5)}$$

Where:

$\underline{\omega}_v^e$**:** is the earth's rotation vector w.r.t the vehicle-axes

$\underline{\omega}_w^e = \begin{bmatrix} p_w^e & q_w^e & r_w^e \end{bmatrix}^T$ is the earth's rotation vector w.r.t the wind axes. In the wind-axes system, for the vehicle travelling east, equation (A-5): ➔

$$\underline{\omega}_w^e = \left[T_v^w\right]\underline{\omega}_v^e$$
$$= \begin{bmatrix} 0 & \cos\gamma & -\sin\gamma \\ -1 & 0 & 0 \\ 0 & \sin\gamma & \cos\gamma \end{bmatrix} \begin{bmatrix} 1 \\ 0 \\ 0 \end{bmatrix} \omega^e = \begin{bmatrix} 0 \\ -\omega^e \\ 0 \end{bmatrix} \qquad \text{(A-2.6)}$$
$$\Rightarrow$$
$$q_w^e = -\omega^e$$

If we consider the motion of the vehicle w.r.t to earth's longitude μ, then we get:

$$\dot{\gamma} = q_w - q_w^e + \dot{\mu} = q - \dot{\alpha} + \omega_e + \dot{\mu} \qquad \text{(A-2.7)}$$
$$\dot{\theta} = \dot{\gamma} + \dot{\alpha} = q + \omega_e + \dot{\mu} \qquad \text{(A-2.8)}$$

Where:

$\dot{\mu} = \dfrac{V\cos\gamma}{R}$; R is the location of the vehicles mass centre w.r.t earth and:

$$\dot{R} = V\sin\gamma \qquad \text{(A-2.9)}$$

Equations (A-2.1)-(A-2.3), (A-2.7) and (A-2.8) define the vehicle dynamics and may be written as:

$$\frac{d}{dt}V = \frac{T_{x_w} - D}{m} - g\sin(\theta - \alpha) \qquad \text{(A-2.10)}$$
$$\frac{d}{dt}\alpha = \frac{T_{z_w} - L}{mV} + \frac{g\cos(\theta - \alpha)}{V} - \omega^e + q \qquad \text{(A-2.11)}$$
$$\frac{d}{dt}q = \frac{M}{I_{yy}} \qquad \text{(A-2.12)}$$
$$\frac{d}{dt}\theta = q + \omega^e + \frac{V\cos(\theta - \alpha)}{R} \qquad \text{(A-2.13)}$$
$$\frac{d}{dt}R = V\sin(\theta - \alpha) \qquad \text{(A-2.14)}$$

These equations are similar to those suggested by (Bolander M, 2009; Bilimora K and Schmidt D; 1995; Groves KP, et. al., 2005) except for the definition of the pitching moment q used in the current report; the pitching moment Q used by the above authors is equivalent to: $Q = q + \omega^e + \dot{\mu}$. These authors neglect earth's rotation assume that $\ddot{\mu} = 0$.

Equations (A-2.10) – (A-2.14) are non-linear longitudinal model for a (hypersonic) vehicle dynamics; the system states are $(V, \alpha, q, \gamma, R)$. For small perturbation the above equations may be linearised about a given steady state; from the above equations we get the following relationship for the steady state:

$$0 = \frac{T_0 - D_0}{m}; \ \left(T_{x_w} = T_0, \gamma = 0\right) \tag{A-2.15}$$

$$0 = -L_0 + mg_0 - mV_0\left(\omega^e - q_0\right) \tag{A-2.16}$$

$$T_{z_w} = -T_0 \delta\alpha \tag{A-2.17}$$

$$0 = M_0 \tag{A-2.18}$$

$$0 = q_0 + \omega^e + \frac{V_0}{R_0} \tag{A-2.19}$$

Equations (A-2.16) and (A-2.19) ➔

$$L_0 = mg_0 - m_0\left(2V_0\omega^e + \frac{V_0^2}{R}\right) \tag{A-2.20}$$

The linearised longitudinal model for the vehicle is given by:

$$\frac{d}{dt}\delta V = \frac{\delta T\text{-}\delta D}{m} - g_0\left(\delta\theta - \delta\alpha\right) \tag{A-2.21}$$

$$\frac{d}{dt}\delta\alpha = -\left(\frac{2\omega^e}{V_0} + \frac{1}{R_0}\right)\delta V - \frac{T_0\delta\alpha}{mV_0} - \frac{\delta L}{mV_0} + \frac{\delta g}{V_0} + \delta q \tag{A-2.22}$$

$$\frac{d}{dt}\delta q = \frac{\delta M}{I_{yy}} \tag{A-2.23}$$

$$\frac{d}{dt}\delta\theta = \delta q + \frac{\delta V}{R_0} - \frac{V_0}{R_0^2}\delta V \tag{A-2.24}$$

$$\frac{d}{dt}\delta R = V_0\left(\delta\theta - \delta\alpha\right) \tag{A-2.25}$$

The aerodynamic moments and forces (for hypersonic flight) may be written in terms of the respective coefficients as:

$$\delta T = T_V \delta V + T_R \delta R \tag{A-2.26}$$

$$\delta D = D_\alpha \delta\alpha + D_R \delta R + D_\eta \delta\eta \tag{A-2.27}$$

$$\delta L = L_\alpha \delta\alpha + L_R \delta R + L_\eta \delta\eta \tag{A-2.28}$$

$$\delta M = M_\alpha \delta\alpha + M_q \delta q + M_\eta \delta\eta \tag{A-2.29}$$

$$\delta g = \frac{dg}{dR}\delta R = -2\frac{g_0}{R_0}\delta R \tag{A-2.30}$$

Where: η : is the control deflection.

Combining equations (A-2.21)-(A-2.29), we may write the linearised (or small perturbation) model as:

$$\frac{d}{dt}\begin{bmatrix}\delta V\\ \delta\alpha\\ \delta q\\ \delta\theta\\ \delta R\end{bmatrix}=\begin{bmatrix}\left(\frac{T_V}{m}\right) & \left(g_0-\frac{D_\alpha}{m}\right) & 0 & -g_0 & \left(\frac{T_R-D_R}{m}\right)\\ -\left(\frac{2\omega^e}{V_0}+\frac{1}{R_0}\right) & -\left(\frac{T_0+L_\alpha}{mV_0}\right) & 1 & 0 & -\left(\frac{L_R}{mV_0}+\frac{2g_0}{R_0V_0}\right)\\ 0 & \left(\frac{M_\alpha}{I_{yy}}\right) & \left(\frac{M_q}{I_{yy}}\right) & 0 & \left(\frac{M_R}{I_{yy}}\right)\\ \left(\frac{1}{R_0}\right) & 0 & 0 & 0 & -\left(\frac{V_0}{R_0^{\,2}}\right)\\ 0 & -V_0 & 0 & V_0 & 0\end{bmatrix}\begin{bmatrix}\delta V\\ \delta\alpha\\ \delta q\\ \delta\theta\\ \delta R\end{bmatrix}+\begin{bmatrix}D_\eta\\ L_\alpha\\ M_\eta\\ 0\\ 0\end{bmatrix}\delta\eta \quad \text{(A-2.31)}$$

Thus, in order to investigate the steady state stability the eigen-values of the 5x5 matrix needs to be computed; the system is stable iff the eigen-values have negative real parts.

DEFENCE SCIENCE AND TECHNOLOGY ORGANISATION
DOCUMENT CONTROL DATA

1. PRIVACY MARKING / CAVEAT (OF DOCUMENT)

2. TITLE

On Stability and Control of Hypersonic Vehicles

3. SECURITY CLASSIFICATION (FOR UNCLASSIFIED REPORTS THAT ARE LIMITED RELEASE USE (L) NEXT TO DOCUMENT CLASSIFICATION)

Document	(U)
Title	(U)
Abstract	(U)

4. AUTHOR(S)

Colin C. Coleman and Farhan A. Faruqi

5. CORPORATE AUTHOR

DSTO Defence Science and Technology Organisation
PO Box 1500
Edinburgh South Australia 5111 Australia

6a. DSTO NUMBER	6b. AR NUMBER	6c. TYPE OF REPORT	7. DOCUMENT DATE
DSTO-TR-2358	AR-014-663	Technical Report	November 2009

8. FILE NUMBER	9. TASK NUMBER	10. TASK SPONSOR	11. NO. OF PAGES	12. NO. OF REFERENCES
2009 / 1126616	LRR 07 / 289	CWSD	28	18

13. URL on the World Wide Web

http://www.dsto.defence.gov.au/corporate/reports/DSTO-TR-2358.pdf

14. RELEASE AUTHORITY

Chief, Weapons Systems Division

15. SECONDARY RELEASE STATEMENT OF THIS DOCUMENT

Approved for public release

OVERSEAS ENQUIRIES OUTSIDE STATED LIMITATIONS SHOULD BE REFERRED THROUGH DOCUMENT EXCHANGE, PO BOX 1500, EDINBURGH, SA 5111

16. DELIBERATE ANNOUNCEMENT

No Limitations

17. CITATION IN OTHER DOCUMENTS Yes

18. DSTO RESEARCH LIBRARY THESAURUS http://web-vic.dsto.defence.gov.au/workareas/library/resources/dsto_thesaurus.shtml

Aerodynamics, Control systems, Aerodynamic stability, Hypersonic vehicles

19. ABSTRACT

This report has been produced in order to address aerodynamic characteristics and stability and control issues relating to hypersonic vehicles that are deemed to be significantly different from those of the conventional (subsonic or supersonic) air vehicles. In particular we have addressed issues that are relevant to stability and control of hypersonic vehicles. This report should add to the existing knowledge of missile guidance and control engineers and make, other researchers and engineers involved in hypersonic experimentation, aware that these vehicles may not be dynamically stable and require active control augmentation in order to achieve and maintain desirable flight characteristics.