AGENT ORANGE

UNIVERSITY OF FLORIDA

43rd AIAA Joint Propulsion Conference's

Student Design Challenge

University of Florida – *Agent Orange* – Design Report

May 24, 2007

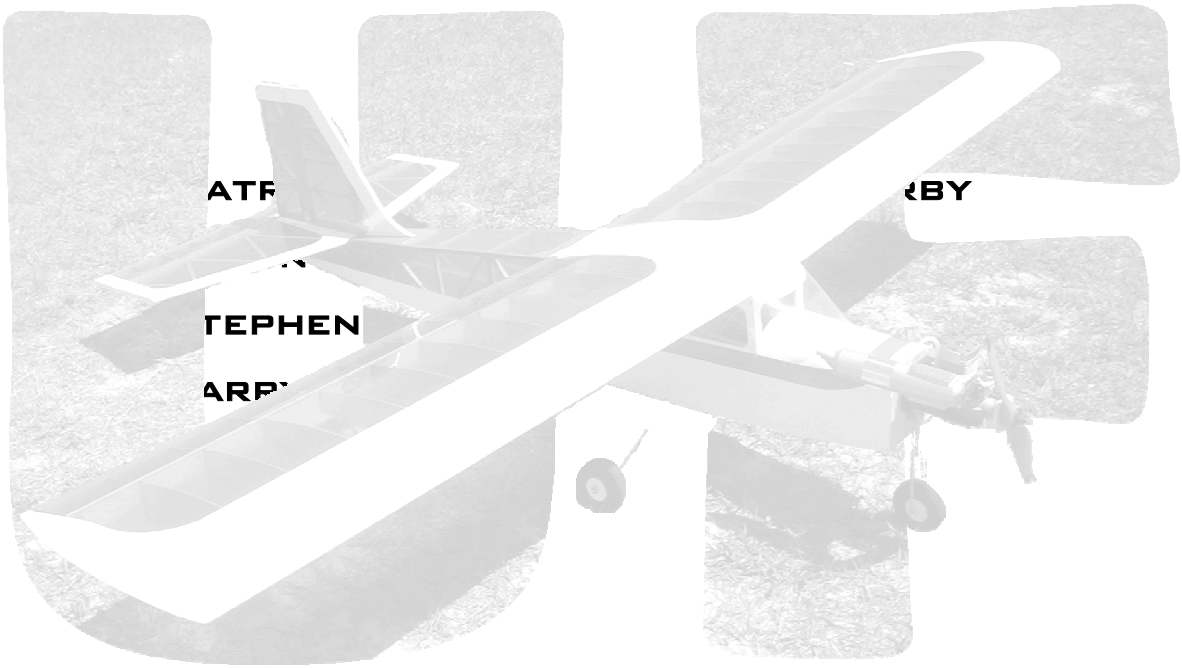

ATR RBY

TEPHEN

ARR

REPORT DOCUMENTATION PAGE

Form Approved
OMB No. 0704-0188

The public reporting burden for this collection of information is estimated to average 1 hour per response, including the time for reviewing instructions, searching existing data sources, gathering and maintaining the data needed, and completing and reviewing the collection of information. Send comments regarding this burden estimate or any other aspect of this collection of information, including suggestions for reducing the burden, to Department of Defense, Washington Headquarters Services, Directorate for Information Operations and Reports (0704-0188), 1215 Jefferson Davis Highway, Suite 1204, Arlington, VA 22202-4302. Respondents should be aware that notwithstanding any other provision of law, no person shall be subject to any penalty for failing to comply with a collection of information if it does not display a currently valid OMB control number.
PLEASE DO NOT RETURN YOUR FORM TO THE ABOVE ADDRESS.

1. REPORT DATE *(DD-MM-YYYY)*
03/08/10

2. REPORT TYPE
Final Report

3. DATES COVERED *(From - To)*

4. TITLE AND SUBTITLE
Agent Orange

5a. CONTRACT NUMBER
FA9550-07-1-0235

5b. GRANT NUMBER

5c. PROGRAM ELEMENT NUMBER

6. AUTHOR(S)
Patricia Miller, Baron Johnson

5d. PROJECT NUMBER

5e. TASK NUMBER

5f. WORK UNIT NUMBER

7. PERFORMING ORGANIZATION NAME(S) AND ADDRESS(ES)
AFOSR
875 N Randolph
Arlington, VA 22203

8. PERFORMING ORGANIZATION REPORT NUMBER

9. SPONSORING/MONITORING AGENCY NAME(S) AND ADDRESS(ES)

10. SPONSOR/MONITOR'S ACRONYM(S)

11. SPONSOR/MONITOR'S REPORT NUMBER(S)
AFRL-SR-AR-TR-10-0123

12. DISTRIBUTION/AVAILABILITY STATEMENT
Distribution A

13. SUPPLEMENTARY NOTES

14. ABSTRACT
At the onset of design, the primary goal was the ability of the craft to generate an abundance of power while performing effective DOD missions. The adaptability and diversity of an air vehicle enhances its quality in tackling not only one avenue of DOD missions, but to carry out several different types of jobs. The approach used to tackle the design was to accumulate a myriad of ideas and use a process of elimination to attain a final design based solely on the given desired capabilities. At the end of several brain storming sessions the design concept has resulted in a system that is designed to the specs or better and will be a highly adaptable aircraft.

15. SUBJECT TERMS
adaptability, mission, accumulate, myriad, aircraft

16. SECURITY CLASSIFICATION OF:			17. LIMITATION OF ABSTRACT	18. NUMBER OF PAGES	19a. NAME OF RESPONSIBLE PERSON
a. REPORT	b. ABSTRACT	c. THIS PAGE			Michael Berman
					19b. TELEPHONE NUMBER *(Include area code)* 703-696-7781

Reset

Standard Form 298 (Rev. 8/98)
Prescribed by ANSI Std. Z39.18

Acknowledgements

Special thanks are given to those who selflessly assisted this project through hands on help, advice and/or encouragement: Scott Bowman, Dr. Rick Lind, Dr. Anil Rao, and Steve at Gator Dining for the toothpicks.

1 Proposal 3
1.1 Introduction 3
1.2 Technical Approach and Innovation 3
1.3 Conceptual Design Approach 5
1.4 Design Fly-off and Projected Performance 6
1.5 Design Team Personnel Expertise 7
1.6 Intellectual Merit 7
1.7 DOD Impact 8
1.8 Estimated Cost 9
2 Executive Summary 9
3 Management Summary 10
4 Conceptual Design 11
4.1 Mission Requirements 11
4.2 Energy Storage and Availability 12
4.3 Propulsion System 13
4.4 Power Consuming Device 13
5 Preliminary Design 14
5.1 Design Parameters 14
5.2 Predicted Performance – Surveillance and Power 18
6 Detail Design 19
6.1 Airframe Modifications 19
6.2 Aircraft Geometry 20
6.3 Aircraft Performance 20
6.4 Power Consuming Device Component Details 22
6.5 Weight and Balance Statement 24
7 Testing Plan 26
8 Drawing Package 27

1 Proposal

1.1 Introduction

At the onset of design, the primary goal was the ability of the craft to generate an abundance of power while performing effective DOD missions. The adaptability and diversity of an air vehicle enhances its quality in tackling not only one avenue of DOD missions, but to carry out several different types of jobs. The approach used to tackle the design was to accumulate a myriad of ideas and use a process of elimination to attain a final design based solely on the given desired capabilities. At the end of several brain storming sessions the design concept has resulted in a system that is designed to the specs or better and will be a highly adaptable aircraft.

1.2 Technical Approach and Innovation

As an approach to achieve the design objectives to meet design specifications, our team will implement a hybrid combination of optimizing integration techniques with developing innovative onboard components. By determining the optimal propulsion configuration, we will develop an aircraft performance that will meet takeoff, endurance, and power output expectations. To derive this configuration numerous power sources were investigated. The advantages and disadvantages, as well as ideal implementation of each power source were reviewed. Crafting a list of the possible energy sources that could be used to power the aircraft, we derived an initial determination of the optimal system. We investigated the benefits of powering an aircraft using the following sources based on take off, power generation, and endurance. Our methodology for takeoff involved taking into account which device produced the highest thrust with a minimum effective weight. By minimizing the weight we will effectively minimize the takeoff distance. The optimization of the balance of thrust to power generation and the provision of a method regulating this relationship throughout the duration of the flight was by far one of the most desired aspects of the design. Another pivotal requirement of the propulsions system involves the endurance of our aircraft. We desired to achieve an optimal thrust to drag relationship in order to maximize the efficiency of the lift to weight correlation. These contributing factors all led to a final determination of the optimal system.

Table 1.1 *Propulsion and Power Source Options*

Solar Cell	Fuel Cell	Battery	Hybrid
			Combination
Gas Engine	**Generator**	**Alternator**	**Glow Engine**

- **Solar Cell** – Solar cells, though innovative, are not able to generate a substantial amount of power, and its performance is subject to weather conditions.

- **Fuel Cell** – Fuel cells have much higher costs and the fuel storage system is much more complex, consisting of multiple fuels possibly under pressure. This is not a valid option per competition rules.
- **Battery** – A completely electric system running entirely off of batteries was thought to weigh too much (the batteries weigh the same charged as discharged), and didn't offer the mission adaptability for our goals.
- **Hybrid** – A hybrid glow/electric system might be more fuel-efficient than a glow engine by itself, but the increases in weight would more than offset those performance gains. A hybrid system would also require an onboard remote starter for the glow engine when switching over from the electric engine. A simple battery with electric motor system is a static design and doesn't meet our adaptability requirements.
- **Generator** – Although there are generators for RC aircraft available for purchase, they're power output is constant and again is not a very dynamic option.
- **Alternator** – There is little to no information or product for RC aircraft alternators. However, a variable current alternator could provide the perfect kind of versatility the goals demand.
- **Gas Engine** – A gas engine has higher performance then solar cells or batteries alone however it has a high weight.
- **Glow Engine** – Glow engines have the high performance of standard gas engines with the advantage of generally decreased weights.

Our primary goals were to design a system that will maximize flight performance and power output, while maintaining varied adaptability. The system we chose was made up of three central parts: glow motor, alternator and a battery. The glow motor will power the propeller as well as the alternator, while the alternator keeps the battery charged. The alternator will be a variable current controlled alternator, thus allowing us the ability to regulate its output during flight. The battery will be relatively small in size, since it will be constantly recharged while the alternator is running. The in-flight adaptability of our system will contribute to the designs effectiveness, due to our ability to switch the engine power output between thrust and electrical power through the alternator. These factors will enable us to optimize our in-flight performance as our power needs change. The primary advantage associated with the chosen system is both the preflight and in-flight adaptability. Through the usage of a glow engine, the planes fuel load could be varied before take off to adapt for long endurance flight using lots of fuel or can be reduced to lighten the aircraft, thus reducing drag, to accommodate short range missions with short take-offs and speedy reconnaissance. The system is also versatile in-flight, varying the distribution of power output by the engine between the prop and the alternator. This allows for the system to accommodate different assigned missions that have varied power needs. Another advantage associated with the chosen system is its ability to optimize itself. The control system is able to monitor and regulate the distribution of power from the engine, so that the alternator provides enough power to recharge the battery to keep the

onboard systems operating and the prop outputs enough thrust to maintain stable flight. The innovative aspects of our propulsion system center on its ability to make efficient use of the power generated by the onboard engine, and the variety of components and payloads that can be integrated in conjunction with the engine. The controller will operate in a closed loop with a commercial flight controller and telemetry package. This will ensure that power is distributed to each subsystem, based on the needs determined by the combined inputs from the telemetry device and pilot commands. The benefits of controlled power distribution are the maximization of the airplane's performance for takeoff, power generation, and reconnaissance all during a single flight. The controller will distinguish, among other conditions, between the flight operations during takeoff and cruise. During takeoff, the controller will devote maximum power to generating thrust, minimizing the needed takeoff distance and time required to reach a desired altitude. However, when the pilot wants the aircraft to trim straight and level, and search for targets, the controller will be able to allocate a determined, minimal amount of power, to maintain such a flight condition. The alternator will devote the remaining power generated will be devoted to the critical subsystems, such as surveillance equipment and other devices. The range of missions able to be successfully executed by our proposed design is further enhanced by the capability to accommodate a variety of different subsystems and payload configurations. Any power-consuming device of appropriate size and weight could be integrated into the circuitry. The user would only need to update the control algorithm to allow for the operation of the device to be optimized at the desired flight conditions. The controller will be able to be modified from a ground command post, most likely a laptop, capable of adjusting parameters in-flight or pre-flight, as the mission dictates.

1.3 Conceptual Design Approach

The conceptual design is rooted around the following three main objectives: Flight Performance, Adaptability and Maximizing Power Output. This yields the configuration shown in Figure 1.1. The goal is when given a certain set of instantaneous needs from different systems (propulsion, surveillance, telemetry, power production); efficiency can be maximized by balancing these needs. This will be achieved by the variable current alternator and the in flight controller.

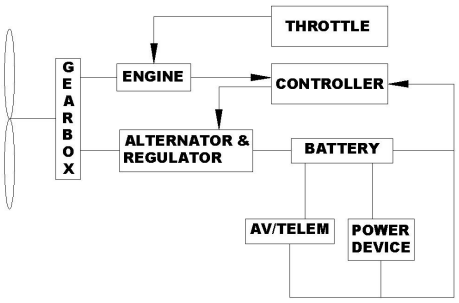

Figure 1.1 *Design Schematic*

The engine and battery will be purchased commercially, while the alternator and the control system will be custom built for optimal integration. The alternator will be managed by the controller in order to administer trade off between thrust and electric power generation during flight, allowing for continuous re-allocation of power. The alternator will be connected to the engine by the same custom built gearbox that drives the propeller. The gearbox will be designed for optimal performance of both. A small 28V Li-Ion battery will be continuously charged by the alternator, providing power during specific segments of the mission when more thrust is needed such as takeoff, as well as 'smoothing' the output of the alternator.

The battery will be a small 28V Li-Ion. This setup will allow for full control over the power output of the system. Engine power can be dispersed in any combination between thrust and electrical power, and can be continuously reallocated. This will ensure the optimal output for fuel consumed and will provide adaptability for various missions and onboard equipment. The pros and cons of different liquid fuel mixtures, based on types and ratios, will be tested to provide the best combination of fuel density and flight performance characteristics. The aircraft will be propelled using a single commercially purchased propeller. It will be chosen based on the testing of several propellers to determine which best matches the engine and airframe for desired performance. The propeller will be driven by the selected glow engine through a custom built gear box, ensuring that it is driven in its preferred rpm range. For surveillance it is intended to use the commercially available Black Widow AV. Expertise at the college may be able to provide insight into modifying the Black Widow to whittle away any unnecessary components or other inefficiencies. The surveillance system will be powered from the battery, connected in parallel with the telemetry and power consumption devices. The voltage to the surveillance systems will be regulated by the onboard control system, and will vary throughout the flight. The camera will be mounted on the forward part of the fuselage, and positioned at an angle that will maximize the range of visibility for ground targets. The possibility of constructing a pivot arm for the lens to rest in will be considered, this will achieve vertical footage at all points along the trajectory of flight. Two control devices are necessary for the execution of this design. A flight controller will be purchased to provide manual control of the dynamics of the system, while the adaptive controller will be developed to allocate voltage to different subsystems of the aircraft. A gain scheduling technique will be implemented to develop a more robust power distribution system. By defining conditions based upon the flight path, flight mode, and possible disturbance in the system, optimization of the maximum power supplied throughout the duration of the flight is possible. This methodology will create an adaptive system that can self configure to accommodate the immediate flight conditions. Developing a control to encompass all flight conditions will provide a challenge, however based upon equipment testing, flight dynamics and the known trajectory the ideal controller to match the desired performance requirements can be created. An advantage of using a gain scheduling approach to distribute power is certain subsystems will not require full power usage during all periods of flight. Therefore, we can maximize overall power usage efficiency.

1.4 Design Fly-off and Projected Performance

As exact performance of components will not be known until testing can be done, a rough estimate of maximum power output for various conditions was calculated as shown in Figure 1. Different assumed efficiencies were used and plotted versus various fraction of engine power being allocated between thrust and alternator power production. For F = 0 all the available engine power would be used to produce thrust, where as for F = 1 all the available engine power would be used to produce electrical power. Figure 1.2 was calculated assuming a maximum engine output of 1.5 Hp. It is felt that for a reasonably designed system the efficiency should be above 50% and that at cruise a good assumption would be an

equal split between thrust and electrical power. These would lead to a range of available electric power between approximately 550 and 275 Watts.

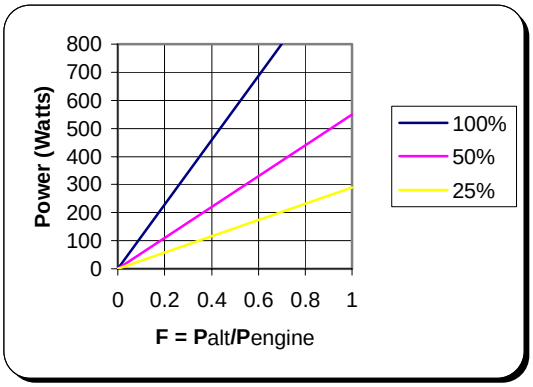

Our design team is majorly comprised of junior and senior undergraduates in the Mechanical and Aerospace Engineering program. The University of Florida has widespread excellence in past AIAA (and other) design challenges making the availability of information extensive. Many of our team members are also involved with the current Design Build Fly AIAA competition and have been in the past.

Figure 1.2 *Alternator Power Output for Varying System Efficiencies and Power Allocation*

1.5 Design Team Personnel Expertise

Collectively our team has extensive experience with RC aircraft in general, including the aerodynamics, propulsion, payload haul, and recreational flying. One of our members is pursuing a graduate education in the field of propulsions and has work experience in stress analysis of large aircraft. Another member is currently an undergraduate research assistant in the Nonlinear Control Research lab and has interned with Boeing two consecutive summers working on Avionics and Payload Integration for STS117 and STS116. This research experience will greatly benefit our controller design. Furthermore, one of our members has interned at General Electric's Aviation division for three rotations working in Military Inlets and Exhaust Systems, Advanced Combustion, and the Airfoils Center of Excellence. Some of our members have worked in the Universities MAV (Micro-Air Vehicles) lab which are designed for reconnaissance and can be used in search-and-rescue, law enforcement, and military surveillance. The Universities MAV team has done a great deal of work on telemetry and AV for their aircraft, knowledge which can be scaled up and used directly towards our design concept and goals. All of our members have hands on fabrication experience with mill, lathe, and other shop tools. We also have a general interest in hands on work with personal automobiles, bikes, computers, etc., experience which is needed to physically execute what our educational background has taught us to design. Not withholding collectively we have comprehensive software knowledge including CATIA, Solid Edge, ProEngineer, Auto CAD, Matlab, Electicalc, Motocalc, and other relevant programs. Based on the presented knowledge base of our design team it is evident that we encompass the skills necessary to build and propel this aircraft to design to specifications or better.

1.6 Intellectual Merit

Our team stands to expand our knowledge in several different facets during the implementation of our design. While our educational background is rich with information it is hands on experience where the transition from the classroom to the work environment is made. Designing a concept is only the first step, constructing and integrating the design into a working machine is where our learning experience will

begin. This design competition is unique in that it is not a competition in designing an aircraft itself, but at an effective use for an aircraft. Our team will be able to take the next step in aircraft design and learn how to integrate different devices into an already working air vehicle and still maintain its integrity for flight and speed. Our design is heavily mechanical based and there in lies the real challenge to us. Although we may understand the concepts of an alternator, how does one decompose it and construct it from scratch? How then do you integrate it into a motor and controller system? How can we get the optimum performance out of our engine/alternator configuration whilst maintaining an effective thrust to achieve speedy and stable flight? On top of all this, how will our system physically be contained inside our AFR and how will it affect the CG, aerodynamics, and weight of our aircraft? These are a few of the design challenges we will have to tackle through the entirety of this competition. There is a considerable amount of electrical engineering involved in our design requiring research and insight from faculty and students. Our team plans to build the majority of our components ourselves rather then purchasing off the shelve items. Aside from the benefits regarding optimization of our design to meet the goals, this will also greatly enhance the intellectual merit of our design. We will understand the inner workings of our entire system, inside and out, because we will have fabricated it all ourselves. This experience will mold our mass of education into an applicable and cohesive structure. We will get our hands dirty and learn a lot in the process.

1.7 DOD Impact

The cost effectiveness of building an unmanned air vehicle that is based upon the design presented is greatly influenced by the availability of the parts used for this particular concept. The ability for a short take-off also benefits the UAV because it can begin its maneuvers on almost any terrain. The particular setup of the propulsion systems interface with the controller allows for greater mission versatility. The ability to seamlessly redirect the extra power needed to generate thrust for a short take-off to the mission specific electronics is one of the greatest assets provided by the setup. In the event the UAV is needed to provide support in search and rescue operations its size and radio interface provides the plane with an advantage over ground personnel. By equipping the aircraft with an infrared and/or electro-optics system and a GPS tracking device the efficiency of a search will be greatly improved. The fact that the vehicle is unmanned provides more safety for rescue teams in adverse weather, where a manned aerial search team would endanger the lives of its flight crew. The optical systems could also be refined and combined with magnetometer like systems to detect weapons. Its remote guidance also allows the UAV to accomplish tasks in toxic conditions. The plane could easily be fitted with infrared-based sensors, spectrometers, and toxicity- based assay systems for chemical weapons detection. It also could carry UV and X-Ray devices to detect radioactivity. All these systems would provide much needed air support and detection systems that would previously be dangerous for manned aircraft to provide or would prove too difficult for ground vehicles to get to. These sampling techniques could also be used for tracking meteorological conditions where needed.

1.8 Estimated Cost

Based on an experienced estimate and on vendor prices for the known components Table 1.2 was generated. The prices account for the purchase price of the items and for the need of multiple purchases during testing phases of construction.

Table 1.2 Estimated Costs

Item	Description	Estimated Cost
Sig Kadet Kit	RC ARF	$235.00
Engine	8.2-10.6cc 4 Stroke	$500.00
Glow Plug		$10.00
Engine Mount		$10.00
Fuel Filter		$5.00
Servos	Five Standard	$75.00
Extensions	Two 24"	$15.00
Y-Harness	1 for aileron servos	$15.00
Seagull Pro Wireless Flight Telemetry		$500.00
Black Widow AV		$300.00
Radio		$250.00
Fuel		$50.00
Building Materials		$200.00
Alternator		$350.00
Gear Box		$50.00
Propeller		$5.00
Battery		$40.00
Fuel Tubing		$5.00
Fuel Valve		$15.00
Miscellaneous Expenses		$500.00
	Total	**$3,130.00**

2 Executive Summary

The University of Florida Agent Orange Team has assembled an aircraft and power consuming device (PCD) in order to compete in the 43rd AIAA Joint Propulsion Conference Student Design Challenge. The flight score is based upon multiple criteria which are heavily reliant on aerodynamic, propulsion, and electrical power generation capabilities. In order to tackle this multi-faceted mission, a team was assembled which consisted of multiple aerospace and electrical engineering students with various forms of practical experience.

The Agent Orange Team chose the Sig Kadet Senior ARF (Almost Ready to Fly) airframe due to several factors, including time required to complete. After weighing many options, the Agent Orange Team decided upon using an on-board Lithium-Polymer battery in order to produce power during flight. This decision was based upon maximizing the flight score as well as reliability and simplicity. A DC-to-DC converter was required to regulate the voltage prior to being delivered to the PCD. The PCD itself was constructed of a Nichrome wire resistive element and a microcontroller circuit.

The engine chosen was the O.S. .91 FX 2-stroke glow engine, which provides very high performance at a reasonable weight compared to other engines considered. Using a large engine is expected to provide high performance for both the takeoff/climb and the lap stages of the mission. Selection of the battery was critical, as it had to be as light as possible to maintain performance, supply at least 28 v throughout the flight, safely discharge as much current as possible in 10 minutes (corresponding to a 6C rate of discharge), and fit within the aircraft fuselage at a location permitting an adequate CG location. Based on all these factors, the Thunder Power 10S 5000 mAh Lithium-Polymer battery was chosen. This battery is expected to provide a maximum potential output of 840 W.

A separate power supply will be utilized for the receiver, servos, telemetry, and camera system in order to isolate the systems and provide greater safety and redundancy in the event of a component failure. The telemetry and video systems are both commercial off-the-shelf items, purchased from Eagle Tree Systems and Black Widow AV, respectively. The telemetry operates on 900 MHz, and the video system operates on 2.4 GHz.

The Agent Orange Team from the University of Florida has integrated all the required components into an airplane in order to be competitive at the 43rd AIAA Joint Propulsion Conference Student Design Challenge. Through the use of a simple and reliable power production system, along with a high performance propulsion system, the Agent Orange Team hopes to perform well at the competition.

3 Management Summary

The design team was comprised of three electrical engineers, three aerospace engineers and the chief engineer who oversaw all aspects of the design. The dynamic between the electrical and aerospace team members was harmonious and supported positively to the knowledgebase available to the design. The team organization can be seen in Figure 3.1.

Scheduling was done conservatively and with the intention of leaving room for possible mistakes down the road. A Gantt chart for the duration of the competition can be seen in Figure 3.2; items in blue are the projected schedule and directly beneath that in red is the actual time of work.

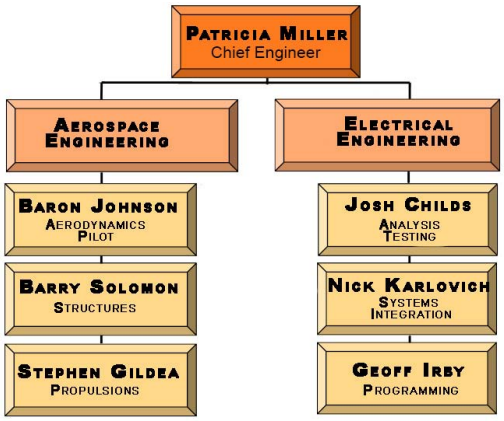

Figure 3.1 *Team Organization Chart*

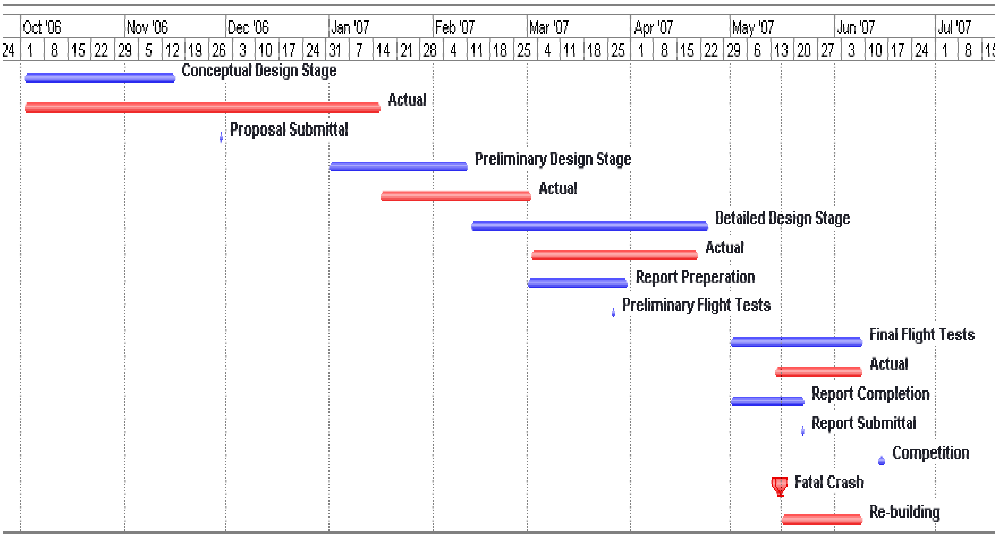

Figure 3.2 *Gantt Chart*

4 Conceptual Design

The first step in Agent Orange's design was to brief all team members of the competition rules and scoring procedures. After the intricacies of the competition were understood, the conceptual design process began. First, a list of design choices for each subsystem was prepared, derived from individual research efforts and group brainstorming sessions. Next, based on the mission requirements, a list of design characteristics and relative weights for each subsystem were compiled. Finally, each design choice was ranked according to its ability to constructively execute or fulfill a design characteristic. After summing the weighted rankings for each subsystem, conceptual design choices were made. Refinements to the conceptual design choices were made in the preliminary and detailed phases of the design.

4.1 Mission Requirements

The goal of Agent Orange's entry into the 43rd AIAA Joint Propulsion Conference Student Design Challenge was to provide a design of an unmanned aerial vehicle (UAV) capable of performing competitively in a variety of categories. Agent Orange's design will be scored, in flight, according to the following performance attributes: take off roll distance and time of climb to an altitude of 250 feet; the number of complete course laps able to be completed in under 10 minutes while correctly identifying all targets and maintaining the continuous operation of the power consuming device as well as the total measured power output to the power consuming device (PCD). The performance metrics for time to climb, number of completed laps, and power output will all be normalized to the maximum values obtained by all the teams. The complete equation for calculating the final score of an entry is given in Equation (4.1).

$$FS = (WRP \cdot .25) + (R_K \cdot \frac{MTO}{CTTO} \cdot 25) + (\frac{CTNOL}{MNL} \cdot 25) + (\frac{CTTPO}{MTPO} \cdot 25) \quad (4.1)$$

The performance of the airplane for takeoff, endurance, and power consumption are equally weighted, so it was important to ensure that the design effort did not overemphasize the importance of any single performance criteria. Additionally, the penalties imposed for take off roll distances greater than 200 feet provided sufficient impetus for Agent Orange to assign that distance as the maximum acceptable take off roll distance.

As a direct result of the scoring procedure, the effects of all conceptual designs on take off, endurance and power consuming performance were equally weighted in the Figures of Merit (FOM's) used to make conceptual design decisions. In an ideal environment, a design concept would have been evaluated based solely on its ability to contribute to the final score of Agent Orange's design. However, due to the finite amount of time and money available to complete this project, the price and feasibility of a given concept were also taken into consideration while evaluating systems during this phase of the design process.

4.2 Energy Storage and Availability

The first decision that needed to be made during the conceptual design phase was whether to couple the power sources for the propulsion and power consuming systems. A system was considered to be "coupled" if the energy used to drive the propulsion system was from the same source as the energy used to drive the PCD. The term "uncoupled" was used to describe systems in which the energy sources for the propulsion and power consumption systems were separate, and did not interact.

The coupled concepts considered utilized an engine that provided thrust to the propeller via a transfer of mechanical power. In order to provide power to the PCD, a portion of the mechanical power provided by the engine would be converted into electrical power, using a generator or alternator, and delivered to the PCD. The uncoupled concept is much simpler: one engine provides the mechanical power used to drive the propeller, and a separate power source (a battery) delivers power to the PCD. The tradeoffs for each design concept are summarized in Table 4.1.

Table 4.1 *Propulsion and PCD Systems Decision Matrix*

	WF	Engine & Generator	Engine & Alternator	Engine & Battery
Feasibility	5%	2.0	1.0	3.0
Price	5%	2.0	1.0	3.0
Takeoff	30%	3.0	1.0	2.0
Endurance	30%	2.0	3.0	1.0
Power Consumption	30%	1.0	2.0	3.0
Sum	100%	**2.00**	**1.90**	**2.10**

Having decided upon an uncoupled system to provide thrust and deliver power to the PCD, the marginal benefits of incorporating additional, or alternate, power sources into the design were considered. Supplemental power sources considered included solar cells and thermal cells. Solar cells convert the energy from the sun into electrical energy, while thermal cells generate current and voltage based on the

temperature gradients within themselves that arise as a result of their environment. As an alternative to using a battery to operate the PCD, the possibility of incorporating fuel cells into the design was also investigated. A comparison of these systems is shown in Table 4.2.

Table 4.2 *Supplemental Power Devices Decision Matrix*

	WF	Engine & Battery	Engine & Fuel Cell(s)	Engine & Battery with Solar Cell(s)	Engine & Battery with thermal cell(s)
Feasibility	5%	4.0	1.0	2.0	3.0
Price	5%	4.0	1.0	2.0	3.0
Takeoff	30%	4.0	1.0	2.0	3.0
Endurance	30%	4.0	1.0	2.0	3.0
Power	30%	1.0	4.0	3.0	2.0
Sum	100%	**3.10**	**1.90**	**2.30**	**2.70**

Based on Table 4.2, the configuration decided upon for Agent Orange's design was an engine to drive the propeller and a battery to provide power to the PCD. No supplemental devices were chosen to be incorporated into the design because the financial expenses and additional take off masses associated with them overcame any benefits to the power consumption capabilities of the design.

4.3 Propulsion System

Having decided to provide power to the propeller independent of the PCD, the type of engine used in the design needed to be determined. Initially, gasoline engines, glow engines, and electric motors were all considered to be possibilities. Each type of motor or engine offered its own set of advantages and disadvantages, which are summarized in Table 4.3. The selection of a specific engine type and size was completed in the preliminary design phase.

Table 4.3 *Propulsion Power Source Decision Matrix*

	WF	Glow Engine	Gasoline Engine	Electic Motor
Feasibility	5%	3.0	1.0	2.0
Price	5%	3.0	2.0	1.0
Takeoff	30%	2.0	3.0	1.0
Endurance	30%	3.0	2.0	1.0
Power	30%	2.0	1.0	3.0
Sum	100%	**2.40**	**1.95**	**1.65**

4.4 Power Consuming Device

With the inclusion of the requirement to design its own PCD, Agent Orange faced an additional design challenge. In the conceptual design phase, a device needed to be designed that was able to dissipate varying amounts of power, due to the precise amount of power needing to be dissipated was not exactly known. As a result of a market survey of existing battery's weights, voltages, and capacities, Agent Orange decided that any acceptable design for the PCD would need to be able to dissipate up to 1000 watts.

Several methods for dissipating such a large amount of power, while incurring a minimum weight penalty, were considered. In order to "consume" the electrical power provided by the on-board battery it needed to be converted into another form of power; Agent Orange considered power consumption via the production of light, heat, or mechanical energy. These general methods of power consumption were refined into ideas that used simple devices; light emitting diodes (LED's), light bulbs, a highly resistive circuit to generate heat, and a loaded electric motor. The idea to use LED's was originally proposed by the Air Force Research Laboratory, and an example of a resistive circuit was provided as well. The decision making process for Agent Orange's power consuming device is summarized in Table 4.4. The decisions regarding the materials and circuitry for the design of the PCD was made during the preliminary and detail design phases.

Table 4.4 *Power Consuming Device Decision Matrix*

	WF	LED's	Light Bulbs	Motor	Resistive Wire
Feasibility	5%	2.5	2.5	1.0	4.0
Price	5%	1.5	4.0	1.5	3.0
Takeoff	30%	2.0	1.0	3.5	3.5
Endurance	30%	2.0	1.0	3.5	3.5
Power	30%	1.5	1.5	3.0	4.0
Sum	100%	**1.85**	**1.38**	**3.13**	**3.65**

5 Preliminary Design

5.1 Design Parameters

"Make everything as simple as possible, but not simpler." – Albert Einstein

"Simplicity of the design itself is innovative." – John Horner AFRL

The soul of engineering lies in the ability to solve a problem in the most effective way possible. Making a task more complicated than it needs to be to get the job done is in direct contradiction to this. Thus it was the goal of the Agent Orange team's design to meet the goals necessary in the simplest and effective way conceivable.

Once a conceptual design was determined, it was then necessary to ascertain a preliminary design. The decisions made via the Figures of Merit (FOM) presented previously needed to be assembled, analyzed and their dynamic relationships determined.

5.1.1 Battery Selection

Battery selection was based on energy density, weight, and voltage. Per the competition rules it is necessary to maintain a constant 28 Volt supply. Therefore the primary search criteria included minimum weight with maximum amperage while maintaining the voltage requirement. As common in aerospace engineering, a higher weight corresponds to higher cost.

Since it is desirable for the mission to fly as fast as possible, it is necessary to minimize weight. Early on in the investigation these criteria fit a minimal number of battery options; Lithium Polymer and Lithium Ion batteries. As shown in Figure 5.1, power in the form of horsepower is graphed versus mass for several battery options. Only two batteries on the graph fulfilled the necessary voltage requirements. Of the two, one battery boasts a very large 5 Amp Hour rating (Thunder Power TP5000-10SX) and was chosen to store the onboard energy.

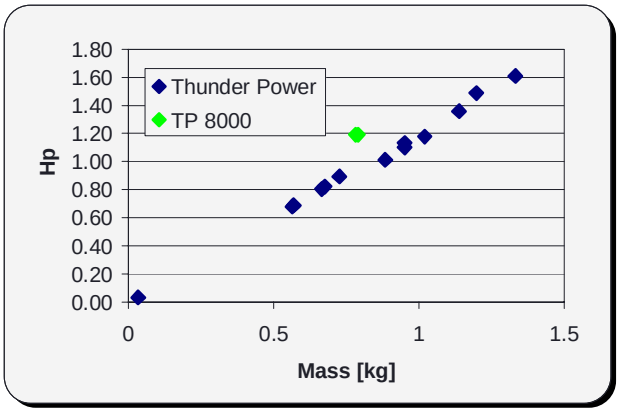

Figure 5.1 *Horsepower per Kilogram*

5.1.2 Engine Selection

Given extensive word of mouth from knowledgeable RC aircraft persons, including the pilot, the top RC engine manufacturers currently are O.S. and Saito. Engine weight in ounces versus the corresponding horsepower is plotted in Figure 5.2. As stated previously, it is crucial to minimize weight. While this parameter was scrutinized during engine selection, attaining a powerful enough engine that could effectively pull a higher load was more of a concern. This would act as a barrier between any possible needed increase of onboard components and a negative impact on flight performance in terms of speed.

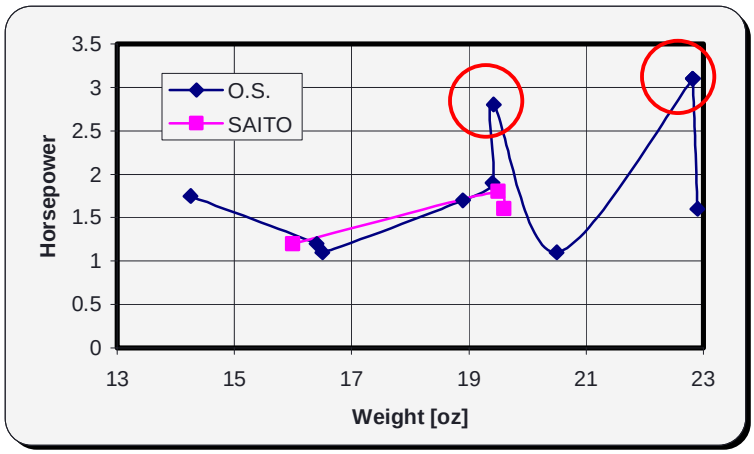

Figure 5.2 *Horsepower per Ounce for O.S. and Saito RC Aircraft Engines*

The two consecutive blue spikes on this graph are the O.S. .91 FX Ringed with Muffler and the O.S. 1.20 AX without Muffler respectively. The FX line is the top-of-the-line models produced by O.S. Given this information coupled with the lower weight and minimal power trade-off in regards to the 1.20 AX, the .91 FX engine was an ideal choice for this project.

5.1.3 Plane Selection

In the interest of time, it was decided early on to purchase a suggested ARF (Almost Ready to Fly) as opposed to modifying an ARF to meet the specifications. It was also thought this decision would increase reliability as possible errors could occur during self-made production.

The amount of information available on the two ARFs in question, the Sig Kadet Senior and the World Series Frontier, was vastly disparaging. The Sig Kadet Senior severely out numbered the World Series Frontier in the volume of information available via the internet. Word of mouth experience was gathered through forums, homepages, and vendors who had experience with the craft. Given the similarity between the two crafts in dimensions, the added information on the Sig was the catalyst in choosing it for this design.

5.1.4 Surveillance Selection

As mentioned in the Proposal, the pilot of the Agent Orange RC Aircraft is also a working member of The University of Florida Micro Air Vehicle (MAV) Research Lab. The MAV Lab is heavily experienced in RC reconnaissance missions and has sampled camera systems from a myriad of suppliers. The Black Widow AV Company is a reputable RC Camera Surveillance supplier that has proven themselves to the MAV Lab to be a worthy option for the missions required in this competition.

Continuing with the trend, it was necessary to minimize weight in the surveillance system with minimal offset to performance. Black Widow offers an all-inclusive camera kit for purchase, however the equipment offered within the kit is not their top of the line products and thus was avoided for selective individual products. The equipment used can be seen in Table 5.2.

Table 5.2 *Surveillance System Components*

Camera	KX141 High Resolution 5V Color CCD
Lens Options	90 and 120 degree
Transmitter and Receiver	2.4ghz 500mw Set
Signal Enhancement	2.4ghz 8dbi Circular Polarized Patch Antenna

5.1.5 PCD Component Selections

Power also had to be dissipated quickly and with effective thermal management. This included taking into account a power consuming device/design that would not ignite the gas engine exhaust fumes and/r risk damage to the balsa wood frame or Monokote. As determined in the Conceptual Design chapter, a resistive circuitry was chosen for the PCD.

Nichrome, known for its excellent thermal conductivity, was chosen as the energy dissipation device. A 16 gauge wire was chosen for its durability and can withstand temperatures upwards of 2000º Fahrenheit. It is made of 80% Nickel and 20% copper, extremely lightweight at a density of 0.2979 lbs/sq in., and has a thermal conductivity of 0.132 [watts/cm/ ºC at 100 ºC].

The nichrome wire had some drawbacks from traditional PCDs as it is strictly a passive element and is limited by Ohms law (Equation 5.1) and the Power Equation (Equation 5.2).

$$P = IV \qquad (5.1)$$

$$P = I_{co\pi}^2 R_{co\pi} = \frac{V_{co\pi}^2}{R_{co\pi}} \qquad (5.2)$$

With these equations the maximum resistance obtainable at the output is 1 Ω corresponding to a 784 Watts maximum without losing power.

The most in-depth portion of the PCD design was researching and understanding the needs for the DCDC converter to regulate voltage. First, the possibility of making a DCDC converter that could take in 37+ volts and deliver out a constant 28 V seemed feasible. The first design was a simple op-amp circuit in Figure 5.3. This design used the gate voltage to determine which mosfet was in the saturation region and which was in the linear region of operation. This circuit could output either a high current or a constant 28 V, but not both simultaneously. The line and load regulation was calculated using Equations 5.3 and 5.4 respectively.

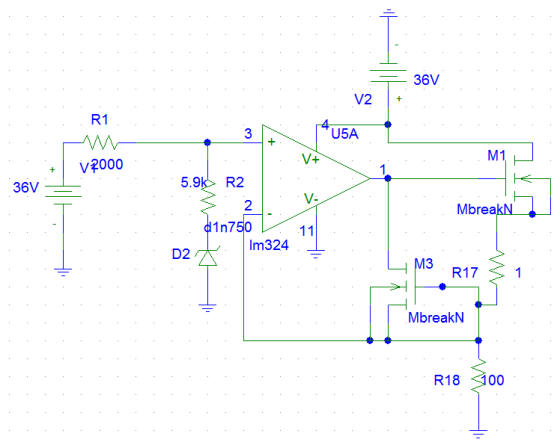

Figure 5.3 *Op Amp DCDC Design*

$$\frac{\Delta Vo}{\Delta Vin} = \frac{28V - 28V}{37 - 34} = 0V/V \qquad (5.3)$$

$$\frac{\Delta Vo}{\Delta Il} = \frac{148mV - 36.11V}{14.83 - 0} = 2.42V/I \qquad (5.4)$$

Line regulation was excellent; the load voltage would not change with varying input voltage. The load regulation was not good at all. The output current was varied from 0 to 14.83 Amps; the output voltage was extremely varied. This meant as the load varied the output voltage and current would vary dramatically. There were other designs similar to that of Figure 5.4 using all bjts. This circuit had a few more drawbacks as it could not sustain a substantial current. However, the constant V_{be} = 0.7 V voltage drop across the bjt at the output helped regulate the output better than the mosfet version. These two options were the best prospects for in-house construction. The next viable option was to purchase an off-the-shelf part to maximize output current while supplying the nominal 28 V.

A list of DCDC Converter options were explored as shown in Table 5.3. The given availability crossed with power and efficiency left the Cosel and the Lambda models to choose from. This was further reduced

knowing that TP5000-10SX is 42 volts fully charged and the Cosel model could only handle up to 36 V input maximum. This led to the Lambda PAF600F48-28. It inputs 36-75 volts and outputs an adjustable voltage range.

Table 5.3 *DCDC Converter Manufacturers*

Part/Manufacturer	Vout	Available?	Power	Efficiency
Artesyn	28 V	No	700	89%
Cosel	28 V	Yes	600	88%
Delta Electronics	28 V	No	700	90%
Lambda	ADJ (26.4-31.4)	Yes	602	90-91%
LP2953	1.23V – 29 V	Yes	7	N/A
TRC Electronics	28 V	No	700	90%
Tyco	28 V	No	700	90%

To have control over the circuitry input, outputs and safety parameters, a microcontroller was incorporated. The microcontroller chosen was the MSP430F2013 from Texas Instruments. This model was chosen for its 32 kHz crystal, 1.1 MHz DCO clock, a 16- bit Timer A with 3 compare/capture ports, and an on chip comparator. It also had analog to digital conversion through sigma delta, serial communication capable of SPI and I2C, pulse width modulator, real time clock, and capability to generate interrupts.

This worked to control mosfets for switching purposes and the pwm feature controlled the output voltage and current while the input capture turned on the device with a switch on the flight controller. This worked by a TTL to the receiver that changes duty cycles when the switch is flipped.

This microprocessor will act as the brains of the system. If a component gets too hot, the system either slows or shuts down. It also acts as the on/off switch and can vary the output voltage and current to maintain a constant 28 V and maximize the total output power.

5.2 Predicted Performance – Surveillance and Power

Given the positive history of the KX141 CCD camera with MAV Lab use, the predicted performance of the surveillance system is similar. From pilot experience using a CCD camera to detect targets at an altitude of 200 ft was difficult in a sunny atmosphere with white and black targets. Given the location of this competition coupled with these observations having been shared with the competition organizers it is thought these concerns will be minor.

Predicted performance of the total power during the flight has a more mathematical nature. Given a 5 Amp Hour battery, run for 10 minutes (corresponding to a 6C discharge rating), the possible power output is as shown:

$$P = IV \Rightarrow (5\ [\text{AmpHours}] \cdot 6\ [\tfrac{1}{\text{Hours}}]) \cdot 28V = 840 Watts$$

This is showing the total amount of power available from the battery alone. Given limitations from circuitry, heating, and component capabilities this number will decrease.

6 Detail Design

6.1 Airframe Modifications

Throughout testing the craft it was found necessary to make certain specific modifications. During the first attempt of flight the engine upon ignition vibrated violently in its mount causing the airframe to shudder. Upon surveillance, the cause of the vibrations was due to a poor mechanical interface between the engine mount and the firewall from sub par hardware supplied with the ARF. To rectify the problem new hardware was purchased. To access the mounting surface a hatch was made on the belly of the plane aft of the firewall. The blind nuts were removed and in their place new bolts and large washers (forward and behind the firewall) with locknuts were used. The hatching can be seen in Figure 6.1. In order to place the controller board in position, and have it be accessible for inspection, another hatch was created in the right side of the plane 27 inches aft of the firewall. This can be seen in Figure 6.2.

Figure 6.1 *Belly Hatch*

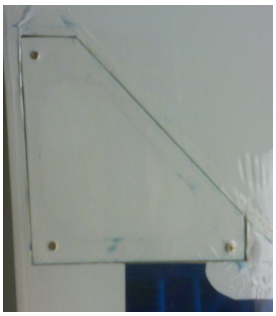

Figure 6.2 *Side Hatch*

As shown in the Gantt chart previously, there was a fatal crash to the plane on May 15 during endurance, prop, and weight testing. While coming out of a bank at 400 feet with heavy tail wind, the left wing began to vibrate, entirely shatter and break apart from the plane resulting in an 85 mph nose dive into a grassy field. To the dismay of the team the plane was un-repairable. Upon analysis of the in-flight visuals and wreckage the cause was due to several different factors. The wing coating that came with the kit was flimsy and poorly applied; due to the high heats during the summer months in Florida the coating became even weaker and seemingly ripped apart from the wing due to heavy winds mid air. The dihedral aluminum brace was bent and this is assumed due to the added weight onboard. Furthermore from the visuals it is thought during the maneuver the airfoil entered an unbalanced mode and encountered some minor aeroelasticity that

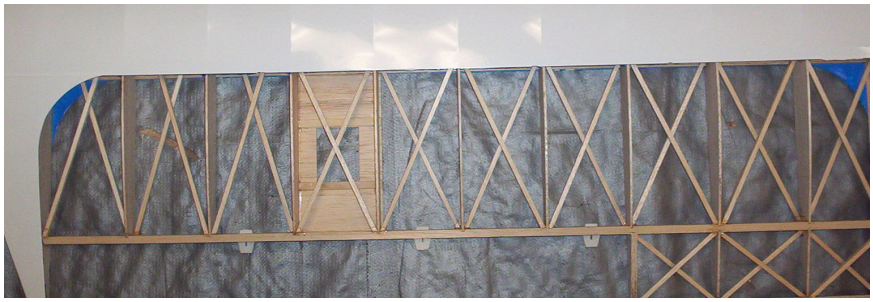

Figure 6.4 *Wing drag/anti-drag cross bracing*

vibrated catastrophically. To rectify these issues several steps were taken. First, a new ARF was purchased. To strengthen the wing, drag/anti-drag cross bracing was added in between each rib, as shown in Figure 6.4. The cheap Orakote on all control surfaces and the wings was removed and entirely recovered with durable Monokote. Pin joints were added to the control surfaces to ward off flutter; furthermore ball-bearing servos were replaced by metal gear servos. The engine also suffered some damage in the accident and had to be entirely disassembled, soaked in a fuel bath over night and meticulously cleaned and put back together.

6.2 Aircraft Geometry

With the use of an ARF aircraft the majority of plane dimensions were preset. A table of the basic craft dimensions is given in Table 6.1. Other aspects of the plane geometry had to be determined based on the preliminary design specifications. For instance the PCD fin on the belly of the plane needed to be sized such that it did not exceed the height of the landing gear nor was it too long so as to cause interference with the DCDC circuit board. It also needed to provide enough surface area to accommodate the required amount of nichrome wiring. Modification dimensions can be seen in Table 6.2.

Table 6.1 *Aircraft Geometric Dimensions*

Dimension	Size
Length	64.75 in
Span	80.5 in
Wing Area	1180 sq in

Table 6.2 *Aircraft Modification Dimensions*

Dimension	Size
Belly Hatch	3.75 x 2.75 in
Side Hatch	15.13 sq in
PCD Fin	1180 sq in

6.3 Aircraft Performance

Xfoil, AVL (Athena Vortex Lattice) and Profili2 were used to analyze the aerodynamic performance of Agent Orange. AVL was developed at Massachusetts Institute of Technology by Dr. Mark Drela and Dr. Harold Youngren. AVL uses single-layer vortex sheets discretized into horseshoe vortex filaments to predict aerodynamic forces and moments on thin lifting surfaces. Xfoil is used for the design and analysis of subsonic isolated airfoils; Profili2, an interface for Xfoil, assists in the aerodynamic analysis of airfoils. The airfoil used for Xfoil analysis was the Clark Y, generally the most common flat-bottom airfoil.

The AVL Model of Agent Orange can be seen in Figure 6.1 along with all data output in Table 6.3. Test flights were conducted to ascertain climb rates, maximum speeds and take-off field length, this data is also shown in Table 6.3. C_l and C_d versus angle of attack, α, graphs, generated using Profili2, can be seen in Figure 6.2. Several test flights were conducted to yield agreeable average rate values. One test flight's data is shown in Figure 6.3.

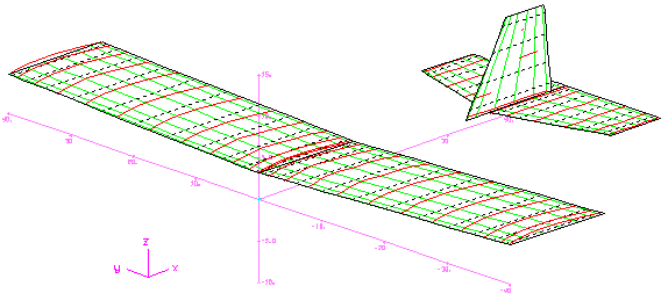

Figure 6.1 *Geometric Representation of AVL model*

Table 6.3 *Data Results Generated with AVL and Xfoil Simulations and Test Flights*

Performance Item	Value
Cl max	1.258
L/D max	78.8
Critical Alpha	~13°
Average Neutral Point (from LE)	7.84 in
Maximum Rate of Climb	25 fps
Stall Speed	28 mph
Maximum Speed	72 mph
Take-off field length	10 ft

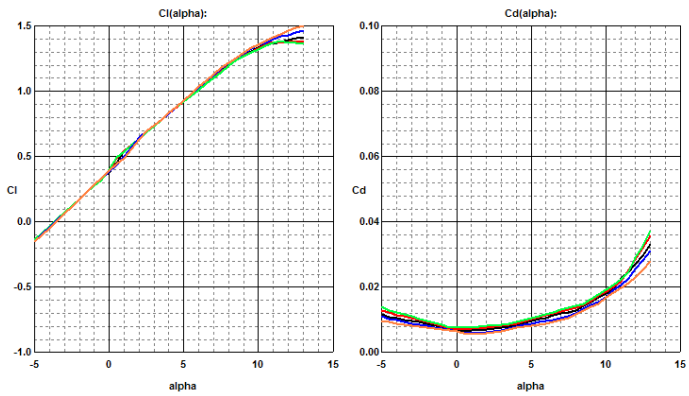

Figure 6.2 *Profili2 C_l and C_d versus Alpha Graphs*

It is note worthy, as can be seen in Figure 6.1, the fuselage was not modeled in AVL, thus resulting in a slightly higher max L/D value. Also calculated were the stability derivatives for the craft. Roll and yaw moment coefficient, C_l and C_n respectively, are plotted versus angle of side slip, β, in Figure 6.4; Pitching moment coefficient, C_m, is plotted versus angle of attack, α, in Figure 6.5. Both figures convey lateral and longitudinal static stability.

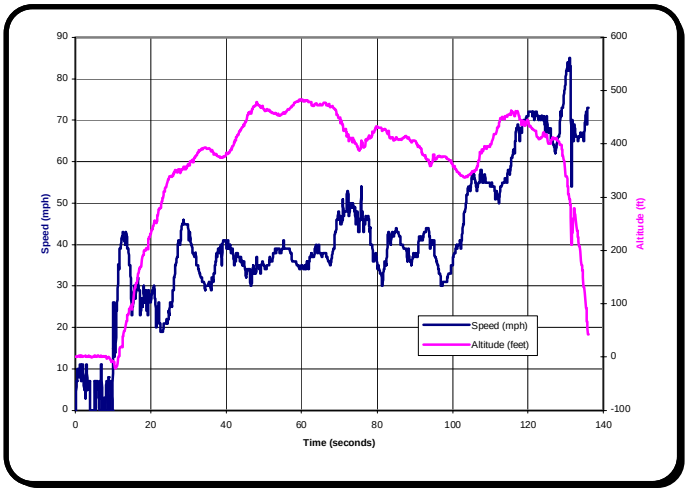

Figure 6.3 *Test Flight Speed and Altitude Data*

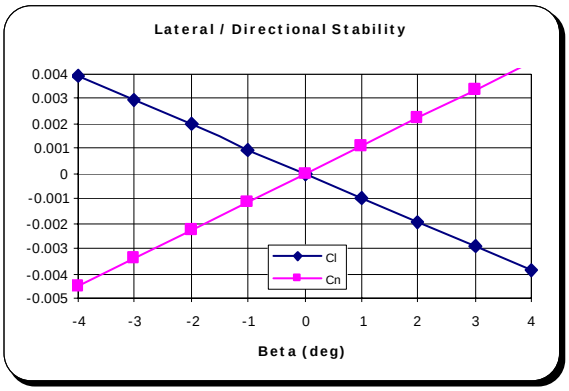

Figure 6.4 *Roll and Yaw Moment Coefficient versus Side Slip Angle*

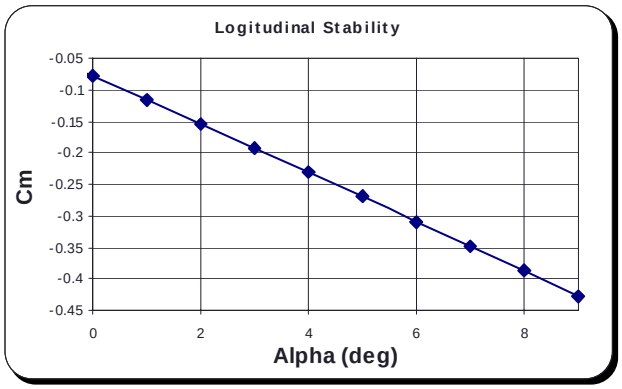

Figure 6.5 *Pitching Moment Coefficient versus Angle of Attack*

6.4 Power Consuming Device Component Details

The block diagram of the power generating circuit and power consuming device is shown in Figure 6.3. The battery pack provides all onboard power for the MSP430, sensors and power consuming device; its power must be managed to power the MSP430 as well as enter the DCDC converter. The battery voltage was divided twice from 37 V to 20 V and 20 V to 3.5 V via voltage regulators.

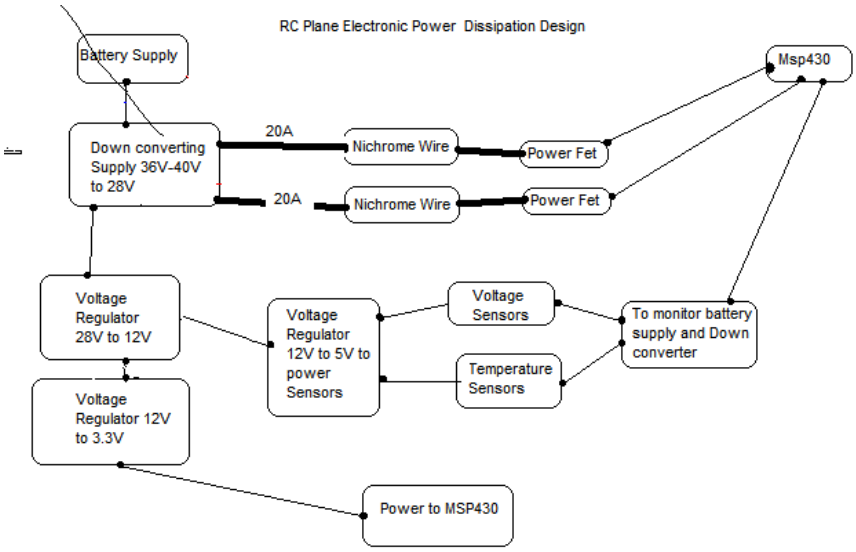

Figure 6.3 *PCD Block Diagram*

The LM317T ADJ voltage regulators have input voltage 42 V and output adjustable from 1.25 V- 39 V. The output voltage was relatively independent of the input voltage aside from a 5 V drop off.

Sensors monitor the temperature of the battery and the DCDC converter. To avoid permanent damage, the battery and DCDC converter must stay below 60 and 100 degree Celsius respectively. The DCDC converter and its surrounding high current components were placed on their own board, layout shown in Figure 6.4. There were a few dimension stipulations that had to be met when creating this board. First, the width could not be more than 6 inches in any area as it would not fit on the belly of plane. Next, the 220 uf capacitor at the output terminals had to be exactly 50 mm away from the terminals for noise and coupling considerations. There also had to be a ten micro farad ceramic cap between 50 mm

and the output to reduce parasitic resistance. The output only saw the actual load and not the parasitic resistances of the 220 uF electrolytic capacitor.

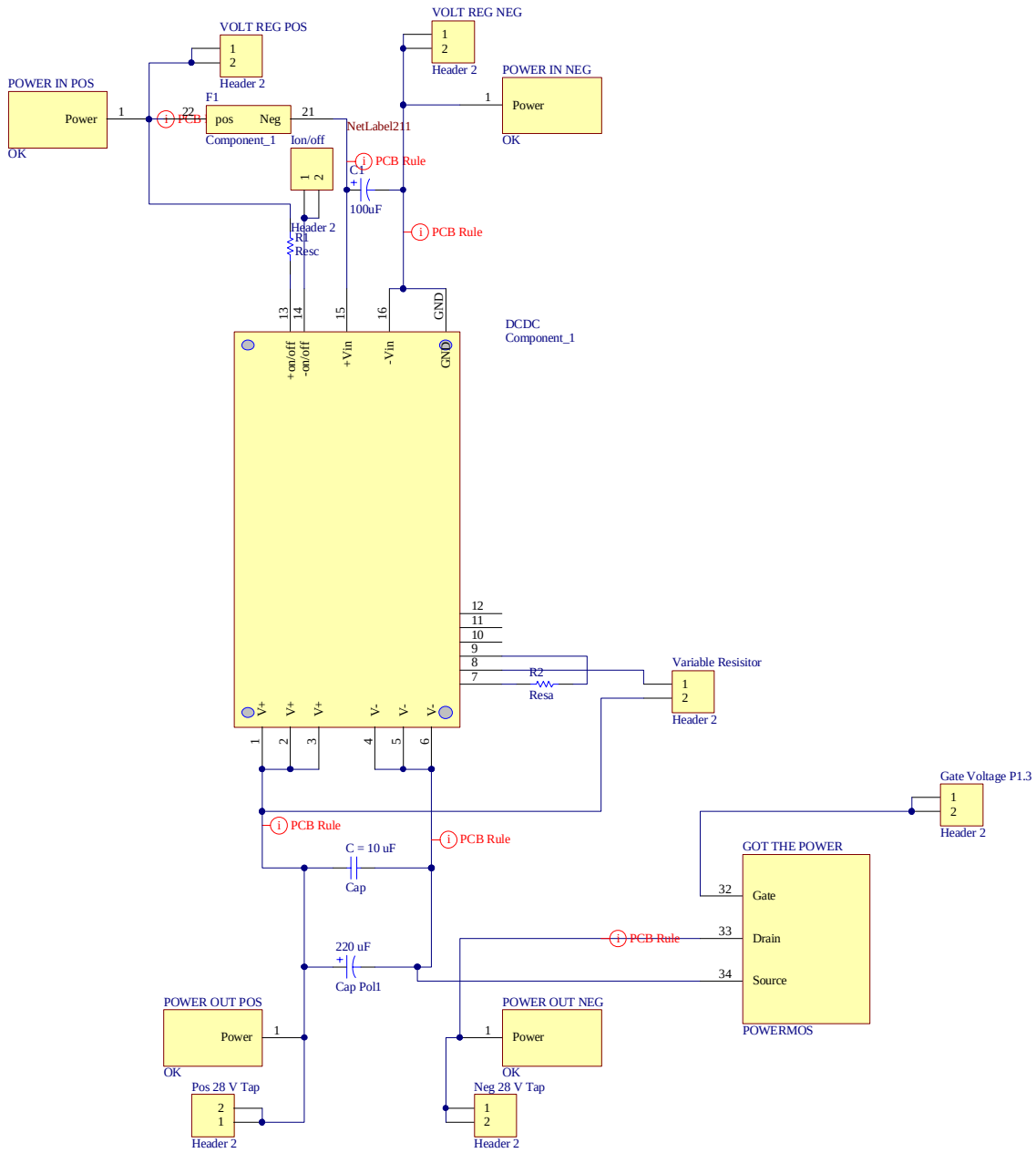

Figure 6.4 *DCDC Conerter High Current Board*

Lastly, the power mosfet required a heat sink that was 1.5 inches tall and .5 inches thick. This mosfet served to pulse the output and control the output current and voltage. Additional design rules called for over current protection, thus a 30 Amp fast blow fuse was used. The second and final board was the smart board that controlled the high current board and contained the microprocessor. The sigma delta analog to digital conversion tool on the microprocessor was used to sense the output voltage and assure

it was a constant 28 V. This could not be done with hardware components but only controlled with software. This board layout is shown in Figure 6.5.

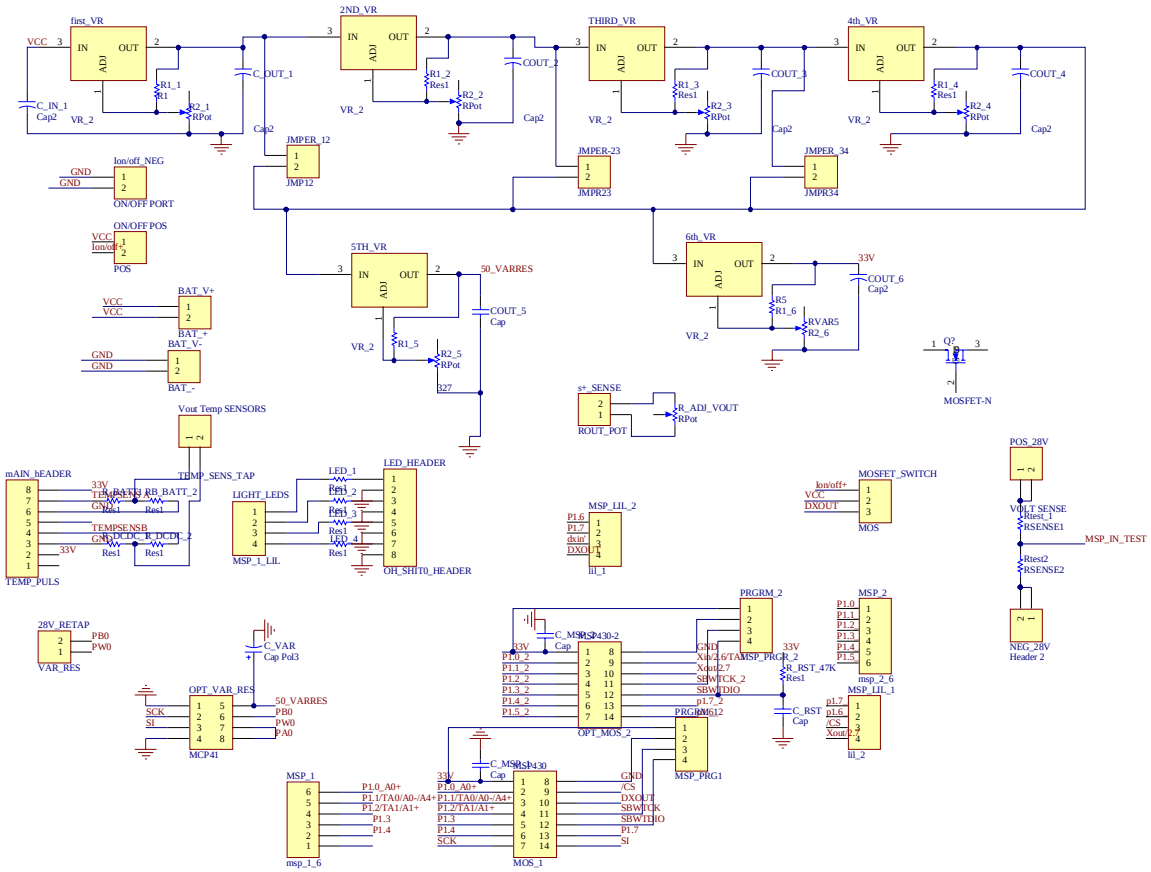

Figure 6.5 *Controller Board Layout*

This board contained 6 voltage regulators connected through jumpers in case of failure or unforeseen circumstances. The two output voltage regulators were 3.3 V and 5 V. The 3.3 V was to power the mosfet while the 5 volts was to power the temperature sensors. It also contained two MSP430 for extra computing power and to communicate with one another.

This board also housed the temperature sensors and then a voltage divider from the output that acted as a feedback loop to change the pulse width of the output mosfet; this maintains the constant 28 V output. Lastly there was an on/off mosfet placed on this board whose gate voltage was controlled by the MSP430.

6.5 Weight and Balance Statement

To determine the center of gravity (CG), a CG table was generated. The total mass of all plane and onboard components was determined including their distances from the desired CG location. The mass and distance was multiplied and summed; this value was divided by the total mass to yield the new CG location. This data can be seen in Table 6.4. This CG location was defined when the aircraft had no fuel

aboard. Adding in the fuel weight and re-doing the moment balance resulted in the agreeable values shown in Table 6.5. The gross weight resulted in 13.66 lbs (12.26 lbs not including fuel).

Table 6.4 *Mass Locations; Distances measured from 3.875 from LE*

Item	Mass [g]	Distance [in]	[g * in]
Airframe			
Rear Landing Gear	142	-2.875	-408.25
Front Landing Gear	24	12.625	303
Empty Aircraft + Wings	1982	-3.75	-7432.5
Propulsion System			
Engine	550.55	14.625	8051.7938
Engine Mount	92	14.625	1345.5
Nose Cone	26	-6.875	-178.75
Engine Cowling	46	18.875	868.25
Propeller (17/6")	112	15.25	1708
Gas Can	100	16.625	1662.5
Power Device			
DCDC Board	336	-13	-4368
Controller	44	7	308
Battery	1198	2	2396
Mica Fin	700	-8	-5600
Nichrome	1.379483	-8	-11.035862
Control System			
Receiver	36	3	108
Servos	126	0	0
Video System			
Telem. Transmitter	46	3.875	178.25
Camera	20	0	0
Cam Transmitter	50	3.875	193.75
SUM	5631.929		-875.49211
Fuel	562.134	16.625	9345.4778
SUM	6194.063		8469.9856

Table 6.4 *Mass Location Results*

Center of Gravity (in. from LE)		
Empty	**Fueled**	**Travel**
4.030	2.137	1.523

With the CG calculated here (average in flight 3.08 in from LE) and the neutral point derived in Section 6.3, this results in a static margin of positive 4.77, thus resulting in an entirely statically stable aircraft.

7 Testing Plan

Testing was handled in a two phase manor, initial testing and final testing. On top of that there were two major areas to test, electronics and flight testing. Initial testing was conducted primarily during the month of March. A flight checklist can be seen in Table 7.1.

Table 7.1 *Flight Checklist*

Previous Night Checklist	
1	Batteries Charging (Tx, Rx, Camera)
2	Servo's Operational
3	CCD Camera Operational
4	PCD Circuitry Operational
5	Glow Igniter Charging
6	Starter Batt Charging
Pre-Flight Tasks	
1	PCD Battery Charged to Full
2	Secure Batteries and wrap with foam (Tx, Rx, Camera, PCD)
3	Attach Batteries
Equipment Checklist	
1	Aircraft
2	Controller
3	Glow Fuel and Fueller
4	Glow Plugs
5	Starter
6	Starter Battery
7	Glow Igniter
8	Tool/Supplies Box
9	Logbook
Field Tasks	
1	Fuel Plane
2	Obtain Frequency
Pre-flight Checklist	
1	Check Control Surface Responses
	R Stick Right - R Aileron Up; L Aileron Down
	R Stick Up - Elevator Down
	L Stick Up - Throttle Up
	L Stick Right - Rudder Right
	No Stick - Surfaces Trimmed
2	Fail Safe Check
	Throttle Off
	Full R Rudder
	Full R Aileron
	Up Elevator
3	Range Check
4	Video Check
	Tx on
	Monitor on
	Video Feed Positive
5	Telemetry Check
	Tx on
	Rx on & in USB mode
	Software Opened & in Live Mode
	Data Feedback Positive
	Altitude and Speed are Zero
6	Attach Wing
7	Clear Area and Start Engine
Post-flight Checklist	
1	Taxi in
2	Kill Engine
3	Rx Power Off
4	Disarm PCD
5	Update Logbook

Preliminary flight tests were conducted with a stock plane, i.e. no onboard PCD or camera electronics. This was done to ascertain the capabilities of the craft in and of itself. Several discoveries were made during the first few flights; the Sig Kadet is extremely light by itself and has an extremely high lift airfoil as it had to be anchored at all times on ground to avoid fly aways. The lift was so intense that elevator up nearly always had to be activated to maintain trim flight. It maneuvered favorably in up to 20 mph winds.

Preliminary electronics testing for the PCD were conducted to test the circuitry and the capability of the battery. It was learned that over 10 minute's of draining the battery didn't heat up to anywhere near what

the expectations were; reaching only roughly 80°Farenheit. This was a favorable outcome as concerns of the battery overheating while inside the plane were high. It was also noticed the nichrome wire glowed red at upwards 250 W but it was dissipated extremely well when exposed to air flow, simulated via a box fan projected directly towards the PCD.

Final testing was conducted primarily during the month of May. Flight tests proved favorable with the onboard weight however as mentioned previously a crash did occur. Observations and compensations were described in the Preliminary Design section previous.

PCD final testing occurred in the same time period. It was seen that as the length of the nichrome wire was increased this resulted in a lower resisted and therefore higher wattage output. When this was done the voltage of the battery dropped faster; with a 520 W output, battery voltage dropped nearly 1 V per minute. The DCDC converter has strict heat requirements and will automatically shut off if it reaches its critical temperature of 100°Celscius anywhere inside itself. This proved to be the largest limiting factor. Heat issues and performance were rectified by a large aluminum heat sink directly on top the converter and with airflow. Also noticed, the longevity of performance was increased if the converter started in a warm state (after a few trial runs).

Camera testing was conducted both on ground and in-flight. Two lenses were tested, 90° and 120°. Both lenses performed positively on ground however the 90° outperformed for precision in flight. It was difficult to render targets in extreme sunlight and this is hoped to be rectified via a more overcast weather tendency at the competition. One crucial factor observed during tests was the fluctuation of image strength versus input power variations. If the power source for the camera has any sort of voltage anomalies the signal and thus the image suffers negatively; thus the camera will be powered via a dedicated Li-ion battery. Furthermore it was decided to mount the camera to a single servo with its own dedicated receiver to be managed by a separate controller. Therefore it is possible to gimbal the camera during flight to have an extended viewing range.

8 Drawing Package

(See Attached)