NAVAL POSTGRADUATE SCHOOL

MONTEREY, CALIFORNIA

THESIS

DEFENDING ELECTRICAL POWER GRIDS

by

Robert W. Rose

March 2007

Thesis Advisor:	Javier Salmeron
Second Reader:	R. Kevin Wood

Approved for public release; distribution is unlimited

THIS PAGE INTENTIONALLY LEFT BLANK

REPORT DOCUMENTATION PAGE			Form Approved OMB No. 0704-0188
Public reporting burden for this collection of information is estimated to average 1 hour per response, including the time for reviewing instruction, searching existing data sources, gathering and maintaining the data needed, and completing and reviewing the collection of information. Send comments regarding this burden estimate or any other aspect of this collection of information, including suggestions for reducing this burden, to Washington headquarters Services, Directorate for Information Operations and Reports, 1215 Jefferson Davis Highway, Suite 1204, Arlington, VA 22202-4302, and to the Office of Management and Budget, Paperwork Reduction Project (0704-0188) Washington DC 20503.			
1. AGENCY USE ONLY ***(Leave blank)***	**2. REPORT DATE** March 2007	**3. REPORT TYPE AND DATES COVERED** Master's Thesis	
4. TITLE AND SUBTITLE Defending Electrical Power Grids			**5. FUNDING NUMBERS**
6. AUTHOR(S) Robert W. Rose			
7. PERFORMING ORGANIZATION NAME(S) AND ADDRESS(ES) Naval Postgraduate School Monterey, CA 93943-5000			**8. PERFORMING ORGANIZATION REPORT NUMBER**
9. SPONSORING /MONITORING AGENCY NAME(S) AND ADDRESS(ES) N/A			**10. SPONSORING/MONITORING AGENCY REPORT NUMBER**
11. SUPPLEMENTARY NOTES The views expressed in this thesis are those of the author and do not reflect the official policy or position of the Department of Defense or the U.S. Government.			
12a. DISTRIBUTION / AVAILABILITY STATEMENT Approved for public release; distribution is unlimited			**12b. DISTRIBUTION CODE**

13. ABSTRACT (maximum 200 words)

This thesis considers the problem of protecting an electrical power grid against a potential attack on its physical infrastructure. We develop a mathematical model, called "Defense of Known Interdictions" (DKI), that identifies the optimal set of components to defend in an electrical power grid given limited defensive resources. For a small test network, we show that defending fewer than 10% of the buses reduces the possible disruption from an attack by over 20%. Previous research has developed optimization models, called I-DCOPF, to find optimal or near optimal interdiction plans for electrical power grids. DKI solution time is determined by I-DCOPF solution time. We develop a model, called the Network Dual Relaxation (NDR), to replace I-DCOPF and reduce solution times. NDR approximates electrical power grid behavior as a minimum cost network flow and uses this approximation to quickly estimate a lower bound for the exact interdiction model. We test NDR on a portion of the North American power grid with a computational limit of 6000 seconds. Results with ten buses defended show that NDR finds solutions that are, on average, 40% better than those of the exact I-DCOPF model with a significant reduction in computational time.

14. SUBJECT TERMS Electric Power Grid; bilevel program; trilevel program; mixed-integer program; critical infrastructure protection.			**15. NUMBER OF PAGES** 71
			16. PRICE CODE
17. SECURITY CLASSIFICATION OF REPORT Unclassified	**18. SECURITY CLASSIFICATION OF THIS PAGE** Unclassified	**19. SECURITY CLASSIFICATION OF ABSTRACT** Unclassified	**20. LIMITATION OF ABSTRACT** UL

NSN 7540-01-280-5500

Standard Form 298 (Rev. 2-89)
Prescribed by ANSI Std. 239-18

THIS PAGE INTENTIONALLY LEFT BLANK

Approved for public release; distribution is unlimited

DEFENDING ELECTRICAL POWER GRIDS

Robert W. Rose
Lieutenant, United States Navy
B.S., Utah State University, 2000

Submitted in partial fulfillment of the
requirements for the degree of

MASTER OF SCIENCE IN OPERATIONS RESEARCH

from the

NAVAL POSTGRADUATE SCHOOL
March 2007

Author: Robert W. Rose

Approved by: Javier Salmeron
Thesis Advisor

R. Kevin Wood
Second Reader

James N. Eagle
Chairman, Department of Operations Research

THIS PAGE INTENTIONALLY LEFT BLANK

ABSTRACT

This thesis considers the problem of protecting an electrical power grid against a potential attack on its physical infrastructure. We develop a mathematical model, called "Defense of Known Interdictions" (DKI), that identifies the optimal set of components to defend in an electrical power grid given limited defensive resources. For a small test network, we show that defending fewer than 10% of the buses reduces the possible disruption from an attack by over 20%. Previous research has developed optimization models, called I-DCOPF, to find optimal or near optimal interdiction plans for electrical power grids. DKI solution time is determined by I-DCOPF solution time. We develop a model, called the Network Dual Relaxation (NDR), to replace I-DCOPF and reduce solution times. NDR approximates electrical power grid behavior as a minimum cost network flow and uses this approximation to quickly estimate a lower bound for the exact interdiction model. We test NDR on a portion of the North American power grid with a computational limit of 6000 seconds. Results with ten buses defended show that NDR finds solutions that are, on average, 40% better than those of the exact I-DCOPF model with a significant reduction in computational time.

THIS PAGE INTENTIONALLY LEFT BLANK

TABLE OF CONTENTS

I. INTRODUCTION 1
- **A. VULNERABILITY OF THE U.S. ELECTRICAL POWER GRID 1**
- **B. SYSTEM INTERDICTION AND DEFENSE 2**
  - **1. Interdicting Electrical Power Grids 4**
    - ***a. DCOPF 5***
    - ***b. I-DCOPF 6***
- **C. THESIS OBJECTIVES 8**
- **D. THESIS OUTLINE 8**

II. DEFENSE OF KNOWN INTERDICTIONS 9
- **A. INTRODUCTION TO DKI 9**
- **B. THE DKI MODEL 13**
- **C. COMPUTATIONAL RESULTS 18**

III. NETWORK DUAL RELAXATION 23
- **A. MAXIMIZING MINIMUM COST IN A NETWORK 23**
- **B. RELAXED MODEL FORMULATION 25**
- **C. COMPUTATIONAL EXPERIENCE 31**

IV. CONCLUSIONS AND RECOMMENDATIONS 39

APPENDIX A. DCOPF MODEL 41
- **A.1 DC OPTIMAL POWER FLOW MODEL 41**
- **A.2 INTERDICTION MODEL 45**

LIST OF REFERENCES 51

INITIAL DISTRIBUTION LIST 53

THIS PAGE INTENTIONALLY LEFT BLANK

LIST OF FIGURES

Figure 1. Six-bus electrical grid to demonstrate ADKI. Buses are labeled B01-B06. ...10
Figure 2. Enumeration tree to solve the six-bus example of Figure 1.....13
Figure 3. Flowchart of DKI algorithm to solve DAD problem.....17
Figure 4. Upper and lower bounds on DAD versus time using ADKI. 20
Figure 5. Total operating cost achieved for various amounts of interdiction and defensive resources. 21
Figure 6. Histogram of the time required to solve the DKI model as a fraction of total DAD algorithm time.. 28
Figure 8. Network approximation for electrical grid shown in Figure 7. 29
Figure 9. Iterations to solve DAD for the Large Sample Grid Area using NDR and DKI. 36
Figure 10. Upper and Lower Bound on z^* from I-DCOPF for Defensive Plan 1. 38

THIS PAGE INTENTIONALLY LEFT BLANK

LIST OF TABLES

Table 1. Bus data for the six-bus grid in Figure 1.....10
Table 2. Line data for the six-bus grid in Figure 1. 11
Table 3. All possible interdiction plans for the six-bus grid in Figure 1 assuming the attacker interdicts exactly two buses.....11
Table 4. Iterations of ADKI to solve DAD for the RTS 3-Area Case. 19
Table 5. Equivalent components for three bus sample grid in DCOPF model and the network equivalent model. 30
Table 6. Equivalent cost data for three bus DCOPF and network equivalent. 30
Table 7. Equivalent capacity data for three bus DCOPF and network equivalent.....31
Table 8. Solution times and resulting objective values for NDR and I-DCOPF. Test case is RTS 3 Area, only buses are interdicted. 32
Table 9. Results for NDR and I-DCOPF applied to the Large Sample Grid. 34
Table 10. Result of NDR and I-DCOPF for the Large Sample Grid with ten buses defended. 35
Table 11. Optimality gap for NDR and I-DCOPF for undefended and ten-bus defense.. 35
Table 12. Complete results for top three defensive plans and undefended case from Figure 9.. 37
Table 13. Results of I-DCOPF for LSG Area using the best three defensive plans from Figure 9. 37

THIS PAGE INTENTIONALLY LEFT BLANK

ACKNOWLEDGMENTS

I wish to acknowledge the insight and guidance I received from Professor Javier Salmeron. His dedication and tirelessness made this thesis possible.

Also, I wish to acknowledge Professor R. Kevin Wood whose attentiveness and keen professional eye greatly improved the quality of this thesis.

Finally, I acknowledge my beautiful wife Natalie, and my children: my studious yet gregarious Harlan; my intrepid yet lovely Nya; and my ever vigilant Rhett. The journey would not be as enjoyable without them.

THIS PAGE INTENTIONALLY LEFT BLANK

EXECUTIVE SUMMARY

This thesis considers the problem of protecting an electrical power grid against a potential attack on its physical infrastructure.

The size and complexity of the U.S. electrical power grid increase the potential of a large scale blackout such as the one that struck portions of the Northeastern United States and parts of Ontario, Canada on 14 August 2003. This blackout had an estimated economic cost of up to $10 billion, left some customers without power for four days, and highlights the vulnerability of the U.S. electrical power grid. A well-planned, deliberate attack against the power grid could have a far greater impact, both in terms of disruption of services and economic cost. Identifying how to optimally allocate limited resources to protect the power grid is the key to making it more resilient to such attacks.

We develop mathematical models and algorithms to identify sets of components which, if protected, would minimize the damage from a potential, coordinated attack on one or more unprotected components. We integrate this model into the optimization module of the Vulnerability of Electrical Grids Analyzer (VEGA) decision-support system developed by researchers at the Naval Postgraduate School.

A trilevel defender-attacker-defender (DAD) problem represents a two-person game between a defender who attempts to minimize potential damage to a system by protecting key components with limited defensive resources, and an attacker who seeks to inflict maximum damage by destroying vulnerable components with limited offensive resources. With fixed defenses, the DAD model becomes a bilevel attacker-defender model (AD) that optimizes interdiction decisions assuming that the system will be operated optimally after interdiction.

This thesis develops a model called “Defense of Known Interdictions” (DKI), and an associated “DKI algorithm” to solve the DAD problem for electrical power grids. Previous research has developed an optimization model, “I-DCOPF,” to solve, at least approximately, the AD model for this problem. The DKI algorithm identifies a set of electrical components to protect (defend) by exchanging information with the I-DCOPF

model: For each specification of a protection plan, I-DCOPF generates a sequence of possible attacks (including the optimal one). For these attacks, the DKI model suggests a defensive plan. The I-DCOPF – DKI interaction continues with instances of protection and attack plans until it can be demonstrated that the incumbent defensive plan cannot be improved.

We integrate the DKI algorithm into VEGA and test it using the IEEE Three Area 1996 Reliability Test System (RTS 3-Area) network, consisting of 73 buses and 120 lines. For this test network, we show that defending fewer than 10% of the buses reduces the possible disruption from an attack by over 20%. The DKI algorithm effectively solves the DAD problem for electrical power grids; however, solving I-DCOPF requires the majority of the computational time in the algorithm, over 99% of the time for all scenarios tested. This motivates the next part of the thesis.

We explore one method to avoid the long solution times associated with I-DCOPF. Currently, I-DCOPF is solved using a decomposition-based algorithm in which a coordinating (master) problem and an operating (sub-) problem yield upper and lower bounds, respectively, on the optimal solution to I-DCOPF. By relaxing the electrical impedance constraints in the operating problem, we can approximate power-grid behavior as a minimum cost network flow. Using this approximation, we develop a model called Network Dual Relaxation (NDR) that quickly generates a solution that is often very close to the optimal solution to the original I-DCOPF. We integrate this model into VEGA and carry out tests on the RTS 3-Area network. For all cases considered, NDR exactly predicts the optimal interdiction in less than 5% of the time required by the exact I-DCOPF model. We also test NDR on a portion of the North American power grid consisting of 5,000+ buses and 6000+ lines. With ten buses defended, and with a 6000 second time limit, NDR finds solutions that are, on average, 40% better than those of the exact I-DCOPF model with a significant reduction in computational time.

I. INTRODUCTION

Electrical power is a vital asset to the United States. This thesis considers the problem of protecting an electrical power grid from a potential attack on its physical infrastructure. Such an attack against an electrical generation and transmission grid in the U.S. could have severe consequences. Our objective is to develop and implement mathematical models and algorithms that optimally allocate limited defensive resources. In particular, these models identify sets of components which, if protected and thereby made invulnerable, would minimize the damage from a coordinated attack on a group of unprotected components. In order to accomplish this task, we extend previous research that seeks to identify critical components, from both an attacker's and defender's perspective.

A. VULNERABILITY OF THE U.S. ELECTRICAL POWER GRID

Electricity powers everyday life, and modern society depends on reliable generation, transmission, and distribution of electrical power. The National Strategy for the Physical Protection of Critical Infrastructures and Key Assets [U.S. Department of Homeland Security 2003] emphasizes that, "were a widespread or long-term disruption of the power grid to occur, many of the activities critical to our economy and national defense…would be impossible."

Disruptions in electrical power service can come from various sources. On 14 August 2003, a combination of weather, equipment failure, and operator error resulted in a massive blackout over large portions of the Northeastern United States and parts of Ontario, Canada. Some locations did not have power restored for four days. The estimated cost of the blackout was between $4 and $10 billion to the U.S. and $2 billion to Canada [U.S.-Canada Power System Outage Task Force 2004]. Although human error contributed significantly to its final extent, the blackout began inconspicuously when high voltage transmission lines contacted overgrown trees. This incident highlights the vulnerability of the electrical power grid and the economic consequence of disruptions of service.

Electrical power providers continuously monitor their transmission grids to limit the likelihood of large-scale blackouts. In electrical power engineering, system security standards such as "N–1" and "N–2" entail operating the transmission grid so that the loss of one or two components, respectively, does not cause a cascading blackout [Wood and Wollenberg 1996]. These standards ignore malicious attacks that could cause the failure of more than two components, and they also ignore the loss of a multi-component systems, such as substations, which may have several buses and transformers in a single geographic location.

With the increased threat of terrorist activity, electric companies must face the possibility of deliberate, intelligent attacks against the transmission grid. In the *National Transmission Grid Study*, the U.S. Department of Energy [2002] states that "new technologies and operating practices are now needed to protect the transmission system against deliberate, coordinated attacks." Accordingly, the North American Electric Reliability Corporation (NERC), the organization tasked with improving the reliability and security of the power system, has established a Critical Infrastructure Protection Committee to assess the cyber and physical security of the electric transmission grid.

The immense size of the U.S. electrical transmission grid makes physical protection of all its components impossible. Certain components of the transmission grid such as generation plants and control centers are staffed continuously and have multiple layers of physical security. Other critical components, such as substations, are routinely unattended, and therefore more vulnerable to attack. Many substations are considered critical assets, meaning their loss "would have a significant impact on the ability to serve large quantities of customers for an extended period of time" [NERC 2004]. Proper identification of the sets of most critical components is a necessary step to ensure that limited resources are optimally allocated to enhance the reliability and security of the U.S. power grid.

B. SYSTEM INTERDICTION AND DEFENSE

In a "system-defense model," a "defender" seeks to limit the amount of damage an aggressor can inflict by attacking the defended system. The defender uses limited

defensive resources to protect certain system components, making them less vulnerable to attack. In order to properly identify the crucial components to defend, the defender must understand how a potential aggressor would attack or "interdict" the system. System interdiction refers to the attacker's role. The "attacker" seeks to inflict maximum damage by destroying system components using limited offensive resources.

The system-defense problem can be viewed as a three-stage, two-person game between the defender and attacker. First, the defender hardens or protects certain system components. Next, the attacker, knowing which components are protected and which are not, interdicts (attacks and destroys) unprotected components in order to inflict maximum damage. Finally, the defender operates the undamaged portion of the system in the most efficient manner. In an electrical grid, this will typically mean minimizing the post-attack "disruption," i.e., unmet demand for electricity. (Disruption can also include increased costs for meeting any or all demand.) As described, the defender has two roles: to physically protect the system, and to operate the system efficiently. Although these roles are often filled by distinct entities, they share a common goal and can be viewed as a single player in this two-person game.

Mathematical models can be used to solve this system-defense game. Brown, Carlyle, Salmeron, and Wood [2006] propose a trilevel defender-attacker-defender (DAD) model to find optimal sets of components to defend, given worst-case interdiction and optimal, post-interdiction, system operation. With fixed defenses, the DAD model becomes a bilevel attacker-defender (AD) model that optimizes system interdiction given optimal, post-interdiction, system operation.

The basic model for the AD and DAD problems has the defender fill the role of system operator. Here, the defender seeks to minimize "cost" by efficient operation of the system. The defender's problem (D) can be expressed as:

$$(\mathrm{D}) \qquad \min_{y \in Y} cy$$

where c is a vector of component operating costs and y is the activity level for each component. All operating constraints are represented by $y \in Y$. "Activity level" will

represent current flow, or generation, or level of unmet demand in our electric-power problem, Costs will include costs of generation as well as penalties for unmet demand.

The attacker seeks to inflict maximum damage by interdicting components in the system. This damage can be viewed as additional costs that the defender must incur by operating the interdicted system. The bilevel attacker-defender (AD) problem is:

$$(\text{AD}) \qquad \max_{x \in X} \min_{y \in Y(x)} cy$$

where x is a binary vector that defines which system components are interdicted, $x \in X$ represents the set of constraints on the attacker's resources (and the fact that x must be binary), and $Y(x)$ represents feasible operating conditions for the defender after attack x. AD assumes that the attacker has perfect information regarding the system, including how the defender will operate the system after any given attack. This is a reasonable, conservative assumption for the defender.

The final step is to protect key components in the system, making them invulnerable to attack. (Defenses that imbue only partial invulnerability can also be modeled with this paradigm.) This level of defense creates the following trilevel defender-attacker-defender model:

$$(\text{DAD}) \qquad \min_{w \in W} \max_{x \in X(w)} \min_{y \in Y(x)} cy,$$

where w is a binary vector indicating which components are defended (protected), $w \in W$ is the set of constraints imposed on the defender, and $X(w)$ is the set of feasible attacks after defense.

1. Interdicting Electrical Power Grids

The bilevel AD model can be used to find optimal attacks on electrical power grids. Salmeron et al. [2003, 2004-I, 2004-II, 2005, 2007], Alvarez [2004], Carnal [2005], and Schneider [2005] have applied these techniques to study power-grid interdiction, where the aggressor attacks components in the grid to maximize disruption. Disruption may be expressed as "total load shed" which is total unsatisfied demand for electricity expressed in terms of either power or energy, or as a cost with a dollar value

per unit of load shed. The latter case is desirable if the cost of load shed varies among buses and/or customer sectors. For example, shedding power from a hospital could be deemed more costly than from a residential area. (Actually, "total disruption cost" will also include increased generation costs resulting from interdiction, but these will normally be much smaller than the penalty costs for unmet demand and can be ignored for the most part.)

a. DCOPF

The basic operating model (the "D" model in "AD") is known as the Direct Current Optimal Power Flow model (DCOPF). This model minimizes the total cost of operating an electrical power grid by proper selection of power generation levels. Total cost is defined as the cost of generating electricity plus a penalty cost for load shed. Power generation levels determine the amount of load shed and the phase angle at each bus, which determines the amount of power each line carries.

Appendix A.1 provides the formulation for DCOPF. That formulation includes DC lines which are omitted from the following discussion for brevity. The objective function, Equation A.1 is shown below:

$$\min_{P^{Gen},P^{Line},S,\theta} \sum_{g} h_g P_g^{Gen} + \sum_{i}\sum_{c} f_{ic} S_{ic}$$

The first term represents the cost of generating power; the second represents the cost of load shed.

Equation A.3 is the balance-of-flow constraint:

$$\sum_{g} P_g^{Gen} - \sum_{l|o(l)=i} P_l^{Line} + \sum_{l|d(l)=i} P_l^{Line} = \sum_{c} \left(d_{ic} - S_{ic} \right) \qquad \forall i$$

This states that for each bus *i*, the amount of power generated at the bus plus the net power inflow at the bus equals satisfied demand less unsatisfied demand (total demand minus load shed).

The electrical impedance constraint, Equation A.2, is shown below:

$$P_l^{Line} = B_l \left(\theta_{o(l)} - \theta_{d(l)} \right) \qquad \forall l$$

This equation relates the power on a line to that line's impedance through its susceptance, B_l, and the change in phase angle, θ, across the line.

Our DCOPF model is a simplified, linear representation of the true behavior of an electrical power grid. DCOPF only models active power flow, neglecting reactive power and transmission losses. Also, DCOPF assumes that changes in voltage magnitudes have minimal effect on real power, and can be neglected. (Full power flow models exist that account for reactive power flow, transmission losses, and voltages drops; however, these models are nonlinear and are much more difficult to solve.) Despite the approximations, DCOPF is expected to yield sufficiently accurate solutions for AD and DAD problems for our electric-power applications: Wood and Wollenberg [1996] state that "DC power flow is useful for rapid calculations of real power flows, and …is very useful in security analysis studies." Overbye, Cheng, and Sun [2004] and Purchala, Meeus, Van Dommelen, and Belmans [2005] conclude that DCOPF is an adequate tool for modeling real power flow, noting that the largest deviations from full power flow models occur on lightly loaded lines. But, lightly loaded lines will probably have only small effects in the AD and DAD problems for electric power. Alvarez [2004] compares DCOPF and a full AC power flow model on an electric grid before and after interdiction, also concluding that DCOPF yields an acceptable approximation.

Note: Hereafter, except where specified, "D," "AD" and "DAD" all refer to the electric-power versions of these generic models.

b. I-DCOPF

Salmeron et al. [2004-I] develop an interdiction model known as I-DCOPF. This model solves the AD problem with DCOPF used as the model for system operation. Appendix A.2 contains the formulation for I-DCOPF. Various techniques have been suggested for solving I-DCOPF including heuristics, conversion to a mixed-integer program (MIP), and decomposition methods.

I-DCOPF is a max-min problem and cannot be solved using standard mathematical-programming techniques. Salmeron et al. [2004-II] present a method for converting I-DCOPF into a standard maximizing MIP, by first linearizing and then taking the dual of the DCOPF problem with additional interdiction variables. Although this formulation can solve I-DCOPF on small test grids, the MIP formulation is intractable for realistically sized networks.

Brown et al. [2006] and Salmeron and Wood [2007] present a Benders decomposition-based algorithm for solving I-DCOPF. The Benders subproblem is the DCOPF model that is first solved for the non-interdicted network. The master problem then finds an upper bound on the interdiction problem by optimistically estimating the amount of disruption the attacker can inflict based on the DCOPF solution. The master problem (MP) can be stated as:

$$\text{(MP)} \quad \max_{z,\delta} z$$

$$\text{s.t. } z \le f\left(\delta^p\right) + g\left(p,\delta\right) \quad \text{for } p = 1,\ldots,P,$$

where p is the iteration number; δ^p is the interdiction plan for the p-th subproblem (δ replaces x in this AD model to avoid confusion with the electrical engineering use of "x" which typically represents reactance); $f\left(\delta^p\right)$ is the minimum total system operating cost (generation plus penalty costs) given interdiction plan δ^p; and $g\left(p,\delta\right)$ is an upper bound on the amount of additional damage that can be inflicted if interdiction plan δ occurs after δ^p. In particular, $g\left(p,\delta^p\right) = 0$, so the p-th constraint ("Benders cut") evaluates $f\left(\delta^p\right)$ exactly if $\delta = \delta^p$. Otherwise, the p-th cut overestimates disruption and therefore MP yields an upper bound on the optimal interdiction plan. The master problem also includes interdiction resource constraints, $\delta \in \Delta$, and solution-elimination constraints (not listed) which ensure that previously explored interdiction plans are not repeated.

Solving MP produces an interdiction plan, δ^p, and an upper bound on the optimal cost, z^p. The DCOPF subproblem is then re-solved with the given set of

interdicted components, and another cut is added to MP before solving it again. This process is repeated until the lower bound (from the most disruptive interdiction plan evaluate through the subproblem) and the upper bound (from the master problem) converge.

C. THESIS OBJECTIVES

The purpose of this thesis is to develop a new mathematical model to solve the DAD problem for electrical power grids and integrate this model into the Vulnerability of Electrical Grids Analyzer (VEGA) optimization module. VEGA is a decision-support system [Salmeron et al. 2005; Wood and Salmeron, 2006; Salmeron and Wood, 2007] that implements AD algorithms for electrical power grids. It also implements the prototype DAD algorithm described by Brown et al. [2006].

We also explore a method to reduce the solution time for the I-DCOPF model. Successful solution of the DAD problem depends on rapid solution of AD. We evaluate how the solution to AD can be expedited by relaxing the impedance constraints in I-DCOPF. This enhancement is integrated into VEGA as an added functionality.

D. THESIS OUTLINE

Chapter II introduces a model and solution algorithm entitled “Defense of Known Interdictions” (DKI) that solves the DAD problem for electrical power grids. Chapter III develops and tests a model called “Network Dual Relaxation” (NDR) that improves I-DCOPF solution time. Chapter IV presents conclusions and recommendations.

II. DEFENSE OF KNOWN INTERDICTIONS

A. INTRODUCTION TO DKI

The generic DAD model defines a type of a two-person game. Israeli [1999] develops a nested algorithm for solving DAD when the inner "D" represents a standard shortest-path problem on a network. In this algorithm, the defender proposes a set of defended components (network arcs) and the attacker solves the corresponding AD problem to find an interdiction set that maximizes disruption (increase in shortest-path length) to the defended system. The defender then responds to block the attacker's interdiction plan, if possible, but he is not allowed to repeat any previous defense plan. The algorithm identifies an optimal defense plan when the restricted lower bound from the defense master problem exceeds the value of the best interdiction plan found.

This section develops a new model, called "Defense of Known Interdictions" (DKI), and uses that in a new iterative algorithm, denoted ADKI, to find optimal defensive sets for the electric-power DAD. At each iteration of the algorithm, the attacker proposes an interdiction plan consisting of a set of interdicted components. The resulting cost (implicitly, disruption) is evaluated by the basic operating (D) model. In order to "prevent" a given interdiction plan, the defender must protect at least one component from the corresponding interdiction set. DKI uses this fact to find an optimal defensive set based on all of the interdiction plans proposed so far.

If all of the possible interdiction plans (and their disruption levels) can be explicitly enumerated, then finding the best defense is relatively easy. At least one component from the most damaging (costly) interdiction plan must be defended, and then one from the second most damaging interdiction plan, and so on. This is repeated until the defensive resource is depleted. This principle is demonstrated in the following example.

Figure 1 shows a simple, six-bus electrical grid. Bus and line parameters are included in Tables 1 and 2, respectively. Assuming the attacker will interdict exactly two buses, fifteen possible interdiction plans exist. These are enumerated in Table 3.

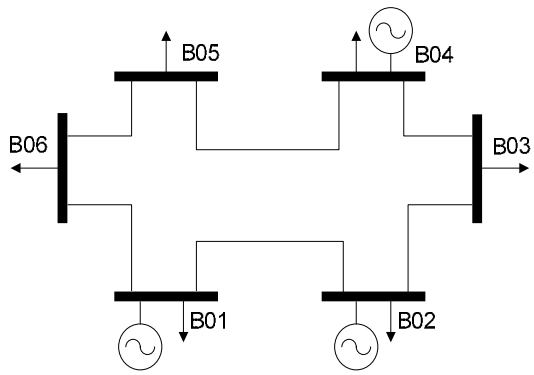

Figure 1. Six-bus electrical grid to demonstrate ADKI. Buses are labeled B01-B06.

Bus Name	Demand d_i (MW)	Shedding Cost f_i ($/MWh)	Generation Capacity P_g^{Gen} (MW)	Generation Cost h_g ($/MWh)
B01	10	100	25	1.0
B02	25	100	60	1.0
B03	15	100	0	0.0
B04	10	100	15	1.0
B05	15	100	0	0.0
B06	15	100	0	0.0

Table 1. Bus data for the six-bus grid in Figure 1. See usage of parameters in the DCOPF model in Appendix A.

Line l Name	Origin Bus $o(l)$	Destination Bus $d(l)$	Capacity $\overline{P}_l^{Line}$ (MW)	Resistance r_l (per unit)	Reactance x_l (per unit)
L12	B01	B02	60	0.003	0.014
L16	B01	B06	25	0.033	0.127
L23	B02	B03	30	0.050	0.192
L34	B03	B04	30	0.023	0.088
L45	B04	B05	30	0.014	0.061
L56	B05	B06	25	0.010	0.074

Table 2. Line data for the six-bus grid in Figure 1. See usage of parameters in the DCOPF model in Appendix A.

Interdiction Set	Shed (MW)	Cost ($)	Interdiction Set	Shed (MW)	Cost ($)
{B01, B02}	75	7515	{B03, B06}	40	4050
{B02, B04}	65	6525	{B04, B06}	40	4050
{B02, B06}	65	6525	{B03, B04}	30	3060
{B01, B03}	50	5040	{B03, B05}	30	3060
{B01, B04}	50	5040	{B05, B06}	30	3060
{B02, B03}	50	5040	{B01, B06}	25	2565
{B02, B05}	50	5040	{B04, B05}	25	2565
{B01, B05}	40	4050			

Table 3. All possible interdiction plans for the six-bus grid in Figure 1 assuming the attacker interdicts exactly two buses. Resulting disruption in terms of load shed and total cost is included. Duration of the study is one hour. That is, costs are evaluated only over the first hour after interdiction.

Inspection of Table 3 shows that the defender must defend either B01 or B02 (or both) to prevent the most severe attack. However, B02 is the more intuitive choice because it also prevents the second and third most severe attacks. With B02 defended, the optimal interdiction set is either {B01, B03} or {B01, B04} with a resulting total cost of $5040. Defending B01 instead of B02 results in two possible interdiction sets with $6525 of total cost, {B02, B04} and {B02, B06}. Similarly, it is apparent that the best two-bus defense is B01 and B02 with a resulting total cost of $4050, and the best three-bus defense is B01, B02, and B06 with a $3060 total cost.

Scaparra and Church [2006] utilize this concept of interrupting an interdiction plan by defending at least one component to defend a service-supply network. Their network contains *p* facilities and a set of costumers, with each costumer serviced from the nearest facility. The purpose of defending the network is to:

> Identify the set of *q* facilities to secure or "fortify", so that after interdiction, the remaining system operates as efficiently as possible.

Likewise, they define the interdiction problem as:

> Of the *p* existing locations of supply, find the subset of *r* facilities, which when removed, yields the highest level of weighted distance.

The algorithm they develop is based on the following observation:

> Let *I* be the set of *r* interdictions in the optimal solution to the lower-level (interdiction) problem without fortification. Then the optimal set of *q* fortifications must include at least one of the *r* facilities in *I*.

Scaparra and Church apply this observation recursively using an enumerative, tree-search algorithm to solve for the optimal defense. This algorithm finds the optimal interdiction plan for the undefended network (*r* interdicted components), which becomes the root node. One branch is defined for each interdicted component, and that component is defended. Next, the optimal interdiction is evaluated for each of the *r* defended networks, and again *r* branches are defined for each node. This continues until all possible defenses are considered (*q* defended components results in a tree depth of q+1).

Figure 2 illustrates this concept for the six-bus grid assuming two defended and two interdicted components ($q = r = 2$). Interdiction sets are represented with brackets, such as {B01, B02}, and defensive sets use parentheses, such as (B01). The notation $\left(\mathrm{B02}, \overline{\mathrm{B01}}\right)$ shows that bus B02 is defended and B01 is not. The optimal defense, optimal attack on the defended network, and resulting total cost correspond to the node with the lowest total cost (defend (B01, B02), attack {B03, B06}, total cost $4050).

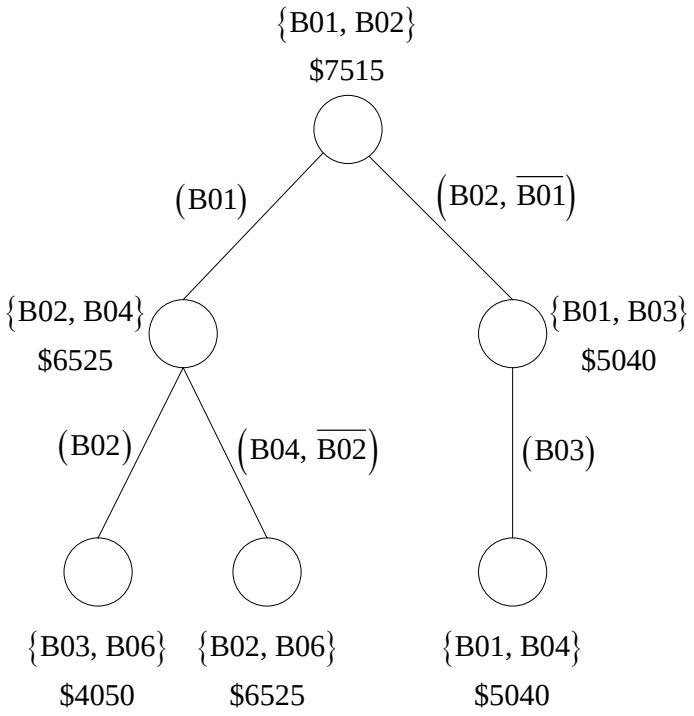

Figure 2. Enumeration tree to solve the six-bus example of Figure 1 assuming two defended and two interdicted components. Each node shows the optimal interdiction and resulting disruption in terms of total cost.

B. THE DKI MODEL

The DKI model uses the same concept of protecting at least one component among those in any incumbent interdiction plan in order to disrupt such an attack. However, instead of considering only one worst-case attack at a time (see Figure 2), we simultaneously examine multiple interdiction plans including (but not limited to) the incumbent optimal to determine the recommended defensive plan. In Section I.1.b we described the decomposition-based algorithm to solve I-DCOPF (AD), showing that the process generates Benders cuts that correspond to feasible interdiction plans, in addition to the optimal one. DKI explicitly uses all known interdiction plans to provide a tentative defensive plan.

In the following formulation, we express disruption through total operating cost, without loss of generality. (Disruption is simply interdicted operating cost less the nominal operating cost, which is a constant.) The DKI model finds an optimal defense against a set of known interdiction plans, which will be form a subset of all possible plans in practical applications. The DKI model formulation follows:

Indices and Index Sets:

$p \in P$	Subset of all possible interdiction plans
$c \in C$	Components that may be interdicted

Parameters and [units] if applicable:

$Damage_p$	Minimum operating cost given interdiction plan p [$]
DC_i	Cost to defend component i [$]
DR	Total defensive resource [$]
$\delta_{c,p}$	1 if component c is interdicted by plan p, 0 otherwise

Decision Variables:

z	Objective value
w_i	1 if component c is defended, 0 otherwise

Formulation:

(DKI) $\min_{z,w} \quad z$

$$\text{s.t.} \quad z \geq Damage_p \left(1 - \sum_c \delta_{c,p} w_c\right) \qquad \forall p \in P \tag{2.1}$$

$$\sum_c DC_c w_c \leq DR \tag{2.2}$$

$$w_c \in \{0,1\} \qquad \forall c \in C$$

$$z \geq 0$$

The objective function, *z*, represents the amount of damage caused by the most severe interdiction plan that cannot be defended against. If at least one component from every interdiction plan $p \in P$ is defended ($\delta_{c,p} = 1$ and $w_c = 1$ for at least one c in every p), then constraints (2.1) imply $z \geq \alpha_p$ where $\alpha_p \leq 0$ for all $p \in P$, and the non-negativity of z implies the optimal objective value is $z = 0$. If none of the components from a given interdiction plan *p* are defended, constraint (2.1) implies $z \geq Damage_p$. Constraint (2.2) is the defensive-resource constraint.

The $\mathrm{DKI}(P)$ model produces an optimal defensive plan against the known interdiction plans $p \in P$. The optimal objective value gives the value of the worst interdiction that cannot be defended with the given resources. This is a lower bound on the optimal objective value to DAD because *P* is only a subset of all possible interdiction plans. DKI can be applied in an iterative algorithm (ADKI) to solve DAD. Constraints of the form $w \neq w_p$ for all $p \in P$ are added to prevent previous defensive plans from recurring. Since w_p is binary, these elimination constraints are easy to implement.

DKI solves quickly. Since only the components for which interdiction plans have been generated are considered, this mixed-integer problem is smaller than that of the master problem in the I-DCOPF model, which, by construction, is very dense. The size of the problem can be reduced further by only including proposed interdictions with cost above a given threshold. For example, only proposed interdictions with damage greater than the incumbent lower bound on the DAD model need be considered.

Figure 3 shows a flowchart of the ADKI process. The first step is to initialize the lower bound (LB) to zero, empty the set of interdiction plans *P*, and solve I-DCOPF for the undefended network. The result is the worst-case attack on the network, and this becomes the initial upper bound. The next step is to solve $\mathrm{DKI}(P)$. This yields a recommended defense plan for the given set of interdiction plans and the cost of the most severe attack that cannot be defended, which becomes the updated lower bound. The defender cannot lower his cost below this bound without additional resources. With the recommended defense plan from $\mathrm{DKI}(P)$, the next step is to find the optimal attack

against the defended network. If the resulting cost improves the upper bound, the bound is adjusted and that defense plan becomes the incumbent solution. The upper bound represents the maximum damage that the attacker can cause without using additional resources. The upper and lower bound are now compared to each other for convergence, providing a termination criterion. The DKI algorithm is solved to find a new defensive plan, enforcing the constraint $w \neq w_p$ for all $p \in P$, and the above steps are repeated. This algorithm eventually produces an optimal defensive plan, a corresponding optimal attack on the defended network, and the resulting costs.

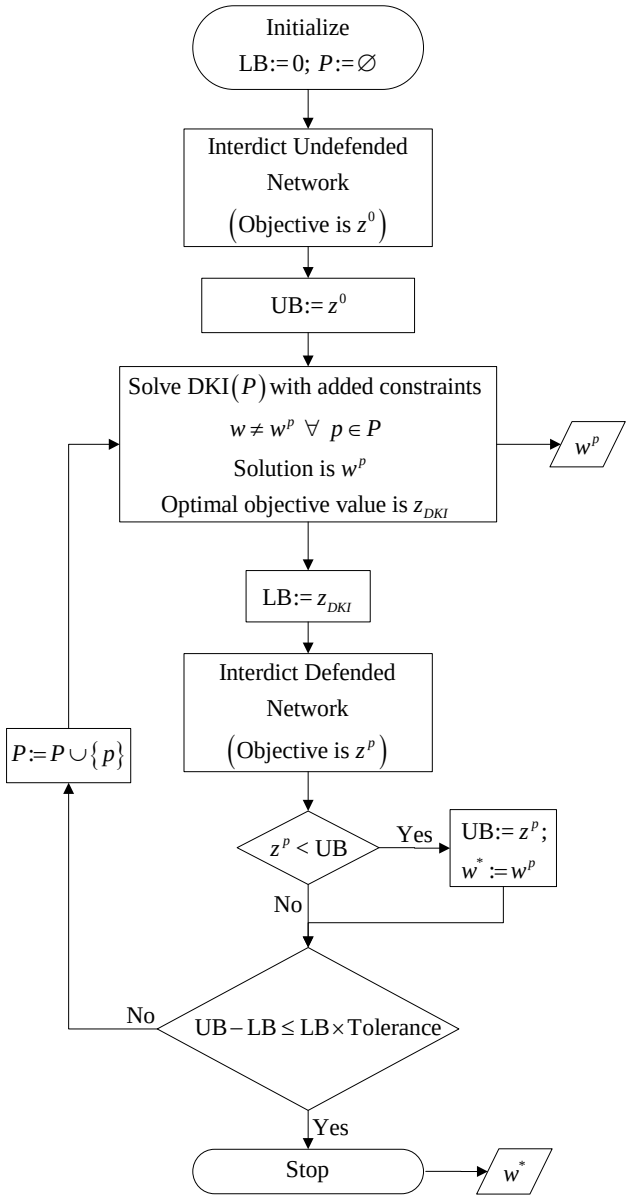

Figure 3. Flowchart of DKI algorithm to solve DAD problem. Optimal defensive plan is w^*.

C. COMPUTATIONAL RESULTS

We have implemented the DKI algorithm using the Xpress-MP 2006 mathematical programming system on a 3.72 GHz desktop computer with 3GB of RAM. The master problem for the I-DCOPF is exported and solved using CPLEX 10.0. The master problem given by DKI, and the I-DCOPF subproblem, are solved by the Xpress-Optimizer.

The test network is the IEEE Three Area 1996 Reliability Test System (RTS 3-Area) [IEEE 1999]. This test set consists of 73 buses, 99 generators, 120 lines, and 6 substations. Substations are not explicitly identified in the RTS test data, but are defined as a set of buses interconnected by transformers. This definition allows the attacker to simultaneously attack all the components of a substation. Interdiction-resource and system-restoration data follow that of Salmeron et al. [2004-I]. One unit of resource is required to interdict an overhead line, two units for a transformer, and three units for a bus or a substation. Long-term disruption analysis assumes the following repair times: 72 hours for overhead lines, 360 hours for bus, and 768 hours for a transformer or substation. The cost of load shed is assumed to be $1,000/MWh for all customers. Each type of component requires the same amount of resource to defend. This may not be realistic as the cost of defending an overhead power line may be significantly different than the cost of defending a substation. However, the assumption of equal costs suffices to demonstrate the methodology.

Table 4 shows how ADKI solves DAD. These results cover the following conditions: RTS 3-Area, only buses are interdicted; nine units of interdiction resource (interdict three buses); and six units of defensive resources (protect six buses). This is a short-duration study, evaluating only one hour of operation after an attack. For short-duration cases, the objective of the attacker is to maximize power disruption; component restoration and load duration curves are ignored. For each iteration, the table shows the set of defended components from $\mathrm{DKI}(P)$, the resulting set of interdicted buses from I-DCOPF, the cost of disruption, and the lower and upper bounds on the DAD solution. For these conditions, defending fewer than 10% of the buses (six out of seventy-three)

reduces the cost of the worst-case interdiction by over 20% ($\$14.23\times10^5$ to $\$11.05\times10^5$). In this example, the optimal defense is found at the final iteration. However, that is not always the case. It is possible that the algorithm identifies the optimal solution but the upper bound requires extra iterations to converge to the value of that optimal solution. Figure 4 shows a plot of the upper and lower bound for this problem as a function of solution time.

Iteration	Defended Components	Interdiction Set	Cost ($\$\times10^5$)	LB ($\$\times10^5$)	UB ($\$\times10^5$)
1	Undefended	{315, 316, 323}	14.34	8.22	14.37
2	{113, 215, 223, 315, 316, 318}	{313, 321, 323}	11.73	9.98	11.73
3	{115, 123, 213, 218, 315, 323}	{215, 216, 223}	12.69	10.18	11.73
4	{118, 123, 216, 218, 318, 323}	{313, 315, 316}	12.01	10.64	11.73
5	{113, 115, 215, 223, 315, 323}	{118, 218, 318}	11.57	10.70	11.57
6	{113, 215, 218, 223, 315, 323}	{115, 118, 318}	11.30	10.74	11.30
7	{113, 118, 223, 315, 318, 323}	{115, 215, 218}	11.05	10.95	11.05

Table 4. Iterations of ADKI to solve DAD for the RTS 3-Area Case. Only buses are interdicted. Three components are attacked and six are defended. Duration of study is one hour.

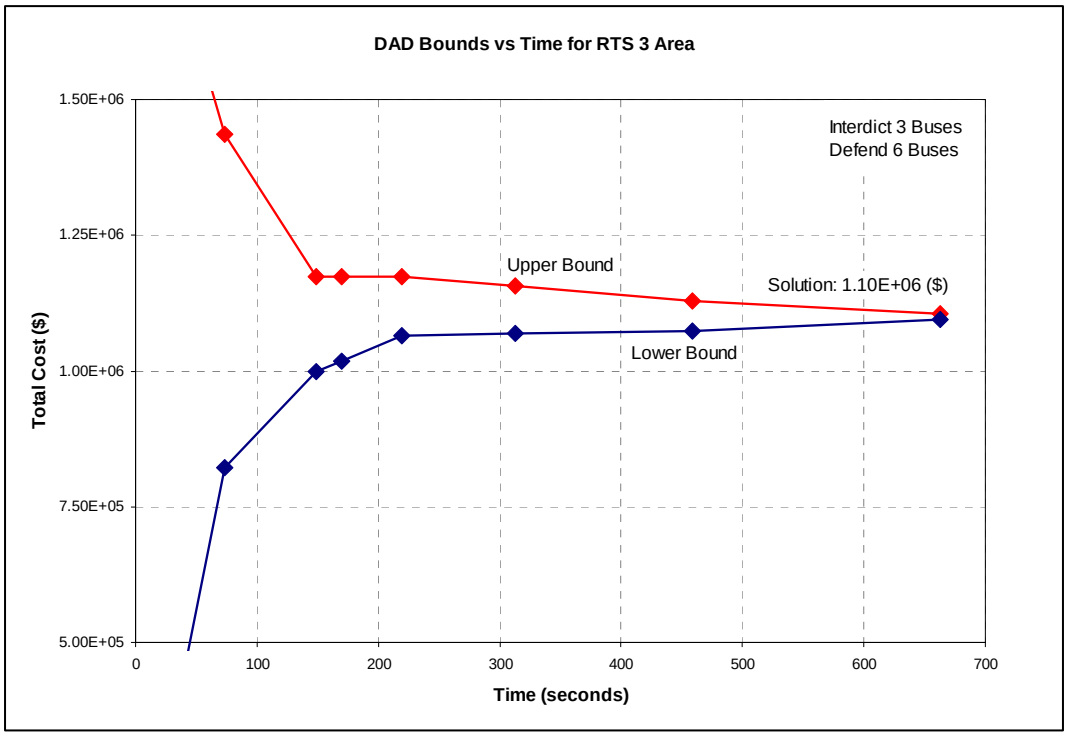

Figure 4. Upper and lower bounds on DAD versus time using ADKI.

In addition to identifying critical components, decision-makers should know the benefit gained by defense. Figure 5 shows the drop in total cost as the number of protected components increases. These results are for the RTS 3-Area case assuming only buses and substations can be attacked, with interdiction resources of nine, six, and three units. When two components are interdicted, defense of one, two or three components lowers disruption significantly. The value of defense tapers off then, so that defending six components is not much better than defending three. The curve for three interdicted components does not exhibit this behavior: defending added components steadily lowers the amount of disruption. This type of information is necessary to perform cost-benefit analysis when planning to defend a system.

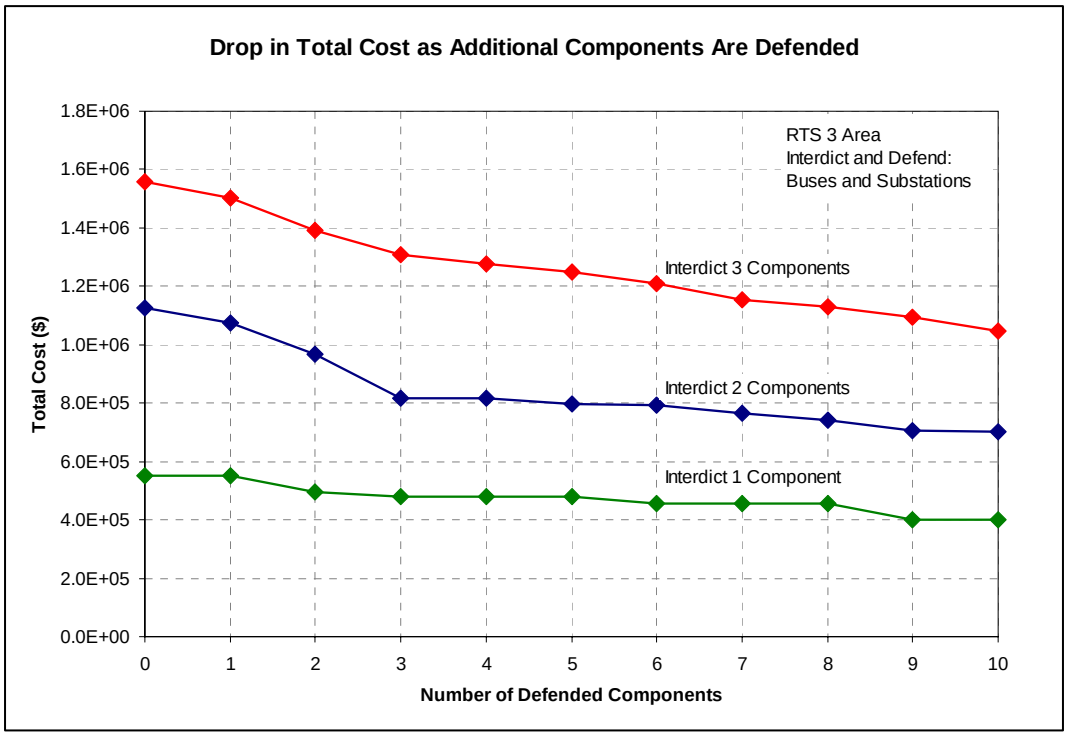

Figure 5. Total operating cost achieved for various amounts of interdiction and defensive resources.

ADKI successfully solves DAD for small networks such as the RTS 3-Area grid. The ultimate goal is to solve DAD for realistically sized networks. However, solving DAD using the ADKI requires efficient solution of the AD subproblem, i.e., I-DCOPF, and our computational experience shows that solving this problem for a large, defended network is extremely difficult.

In fact, the vast majority of time required to solve DAD is spent solving the AD. Figure 6 shows a histogram of the fraction of DKI solution time to total DAD solution time. This data is from the RTS 3-Area with various combinations of attack and defense resource levels. In all cases, the amount of time to solve the DKI model is a very small fraction of the total solution time, always less than 1%. Scaparra and Church [2006] make a similar observation stating that solving their interdiction model is "the most computationally expensive operation of the procedure." Thus, the primary obstacle to solving DAD for large networks is I-DCOPF solution time. The next chapter explores a method to reduce this time.

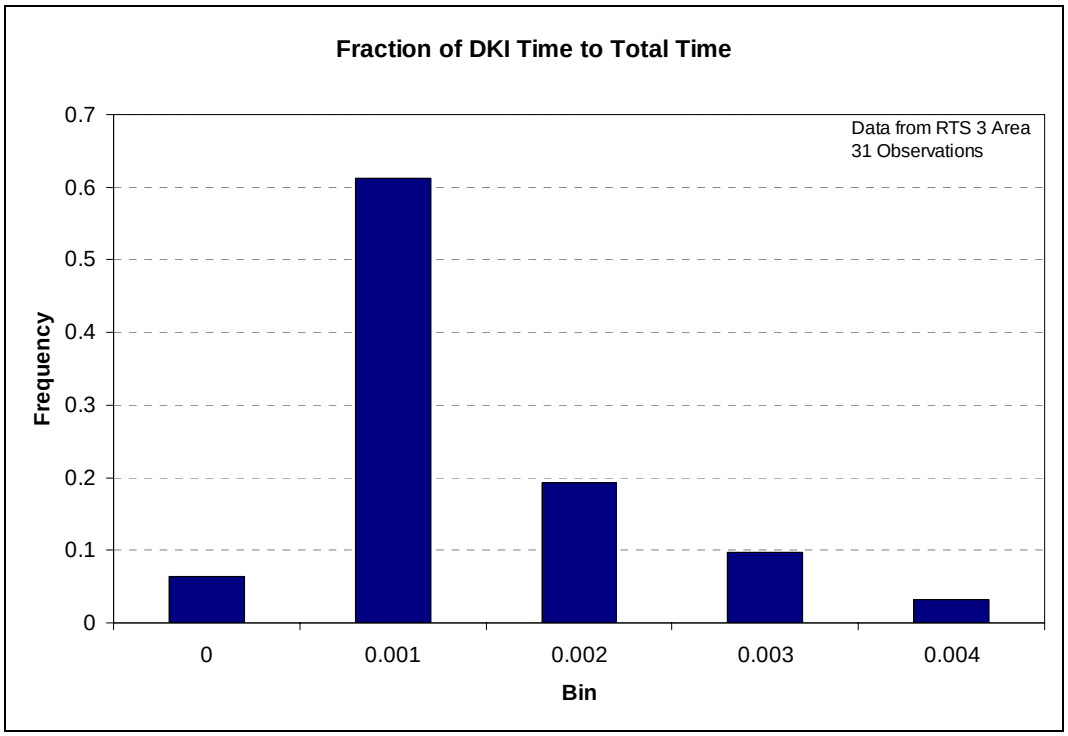

Figure 6. Histogram of the time required to solve the DKI model as a fraction of total DAD algorithm time. This figure implies that the vast majority of the time spent solving DAD by ADKI is spent in solving the AD subproblem.

III. NETWORK DUAL RELAXATION

As noted in the previous chapter, the vast majority of computational time required to solve DAD is dedicated to solving AD, i.e., I-DCOPF. Consequently, significant reductions in DAD computational time can be achieved by reducing I-DCOPF solution times. I-DCOPF is solved using a decomposition-based algorithm [Salmeron and Wood 2007] in which a subproblem and master problem are solved iteratively until the lower and upper bounds converge to the optimal value. Improving either the upper bound or lower bound can potentially improve total solution time for I-DCOPF.

With the exception of the admittance constraint, the DCOPF model that is embedded within I-DCOPF is an example of a minimum cost network flow problem, which can be solved as a MIP or, even more efficiently, by decomposition. Furthermore, the admittance constraint is non-linear in the interdiction model, requiring extra constraints to linearize in I-DCOPF. Removing the admittance constraint leads to a relaxation on DCOPF and the resulting solution would yield a lower bound on the actual DCOPF cost. However, our interest is not actually in the disruption provided by the relaxed model, but in the solution to I-DCOPF assuming the interdiction set from the relaxation. Therefore, the attack plan from the relaxed model can be assessed with DCOPF to obtain a more accurate bound on I-DCOPF. If such a model can find an acceptable lower bound quickly, overall solution time for the decomposition algorithm that solves I-DCOPF should improve.

A. MAXIMIZING MINIMUM COST IN A NETWORK

Israeli and Wood [2002] develop a model, Maximizing the Shortest Path (MXSP), to solve the AD problem for a shortest path network. MXSP assumes a directed network and interdicts arcs. If an arc is interdicted, a penalty is added to that arc length. The penalty is made sufficiently high so that no interdicted arc is on the shortest path. MXSP is a max-min problem. This is converted into a standard maximizing MIP by temporarily fixing the set of interdicted components, taking the dual of the inner (i.e., shortest path)

problem with the given interdiction set, and releasing the interdiction set. The resulting MIP can be solved by standard techniques.

Although MXSP is defined for a shortest path problem, the method developed by Israeli and Wood can be applied to a more general minimum cost network flow problem. The formulation for Maximizing the Minimum Cost Flow (MXMC) follows:

Indices and Index Sets:

$i, j \in N$	Set of nodes
$(i, j) \in A$	Arcs directed from i to j

Parameters and [units] if applicable:

$c_{i,j}$	Flow cost for arc (i, j)[\$ / unit flow]
$d_{i,j}$	Additional damage cost to arc (i, j)[\$ / unit flow]
b_i	Net flow (>0 at supply, < 0 at demand, = 0 transshipment)[flow]
$u_{i,j}$	Upper bound on flow for arc (i, j)[flow]
$r_{i,j}$	Resource required to interdict arc (i, j)[\$]
r_0	Total interdiction resource [\$]

Variables:

$\delta_{i,j}$	1 if arc (i, j) is interdicted; 0 otherwise
$y_{i,j}$	Flow on arc (i, j)

Formulation:

$$\text{(MXMC)} \qquad \max_{\delta \in \Delta} \min_{y \in Y} \sum_{(i,j)\in A} \left(c_{i,j} + d_{i,j}\delta_{i,j} \right) y_{i,j}$$

$$\text{s.t.} \qquad \sum_{(i,j)\in A} y_{i,j} - \sum_{(j,i)\in A} y_{j,i} = b_{i,j} \qquad \forall i \in N \qquad [\pi_i]$$

$$y_{i,j} \le u_{i,j} \qquad \forall (i,j) \in A \qquad [-\alpha_{i,j}]$$

$$y_{i,j} \ge 0 \qquad \forall (i,j) \in A \qquad [-\alpha_{i,j}]$$

$$\text{where } \Delta = \left\{ \delta \in \{0,1\} \,\middle|\, \sum_{(i,j)\in A} r_{i,j}\delta_{i,j} \le r_0 \right\}$$

The dual variables for each constraint are shown in square brackets. Taking the dual of the inner minimum cost yields the following MIP:

$$\text{(MXMC-D)} \qquad \max_{x,\alpha,\pi} \sum_{i\in N} b_i \pi_i - \sum_{(i,j)\in A} u_{i,j}\alpha_{i,j}$$

$$\text{s.t.} \qquad \pi_i - \pi_j - \alpha_{i,j} - d_{i,j}\delta_{i,j} \le c_{i,j} \qquad \forall (i,j) \in A$$

$$\alpha_{i,j} \ge 0 \qquad \forall (i,j) \in A$$

$$\delta \in \Delta$$

B. RELAXED MODEL FORMULATION

The solution to MXMC identifies an optimal set of arcs in a directed network to interdict in order to maximize cost. MXMC can be used to interdict an electrical power grid with lines equivalent to arcs and buses equivalent to nodes in a directed network. However, I-DCOPF can model interdiction of lines, buses, substations, and generators. In order to use the MXMC model to predict interdiction sets for an electrical power grid, the grid must be converted to an equivalent directed network. We refer to the resulting formulation as the Network Dual Relaxation (NDR) model: NDR converts an electrical power grid into a directed network, relaxes the impedance constraint, and implements the

corresponding interdiction model. That is, NDR is the same as MXMC-D applied to electrical power grids. The steps for converting an electrical power grid into an equivalent directed network are:

- Define "infinite capacity" as the sum of all load demand by all customers.
- Electrical buses are represented by two nodes, inlet and outlet, connected by an arc with zero cost and infinite capacity. Interdicting this internal arc is equivalent to interdicting the bus. All arcs entering the bus enter at the inlet node and all arcs leaving the bus leave from the outlet node.
- Electrical power lines are represented by two anti-parallel arcs. An electrical power line is equivalent to an undirected arc joining two buses. To create a directed network, one arc must originate at the outlet node of each connected bus and terminate at the inlet node of the other. These arcs have zero cost and capacity equal to the maximum power for the line.
- Define four new nodes: Source, Demand, Generation, and Shed. All flow originates at the Source node, passes through either the Generation or the Shed node, and terminates at the Demand node. The Generation node is the entry point into the electrical network. Flow through the Shed node represents unmet demand (i.e. load shedding).
- Create a zero-cost, infinite-capacity arc between the Source and Generation nodes and between Source and Shed nodes.
- Create an arc for each generator from the Generation node to the inlet node of the corresponding bus. Arc capacity is set to the capacity of the generator and cost is the cost of generation.
- Create an arc with infinite capacity and cost equal to the cost of load shed from the Shed node to the Demand node.
- Create an arc for each customer demand from the outlet node of each bus to the Demand node. The capacity equals demand at that bus, and the cost is zero.

This process is demonstrated in the following example. Figure 7 shows a simple three-bus electrical grid and Figure 8 is the directed-network equivalent. Tables 5, 6, and

7 show the equivalent components, costs, and capacities for the DCOPF model using the electrical grid and the NDR model using the network equivalent.

The penalty factor added to each interdicted arc ($d_{i,j}$ in MXMC) is constant for all arcs in the NDR model. We set this equal to the cost of load shed and redefine it as d_{Shed}. Since all generation costs are non-zero, this value for the penalty factor properly models an interdicted arc. (Excessively large penalty factors can slow NDR solution time significantly.)

The interdiction sets for NDR and I-DCOPF are equivalent in this example. For example, interdicting arc $\left(\mathrm{B1_{in}},\mathrm{B1_{out}}\right)$ in Figure 8 is equivalent to interdicting bus B1 in Figure 7. Interdicting a line requires one interdiction variable for both of the associated arcs in the NDR directed network. The following two equations demonstrate the NDR formulation to interdict line L12:

$$\pi_{\mathrm{B1_{out}}} - \pi_{\mathrm{B2_{in}}} - \alpha_{\mathrm{B1_{out}},\mathrm{B2_{in}}} - d_{Shed}\delta_{\mathrm{L12}} \le 0$$

$$\pi_{\mathrm{B2_{out}}} - \pi_{\mathrm{B1_{in}}} - \alpha_{\mathrm{B2_{out}},\mathrm{B1_{in}}} - d_{Shed}\delta_{\mathrm{L12}} \le 0$$

To interdict substations, we use one interdiction variable in the equations for all associated buses.

As formulated above, NDR only allows for one consumer sector. Additional consumer sectors can be modeled by adding a unique Demand node for each. Also, NDR does not model multi-period cases with varying loads. We approximate multi-period cases by solving NDR for a single aggregate period.

We do not consider component restoration time in the current NDR formulation. When solving I-DCOPF, the interdiction set for a short-duration study may differ significantly from that of a long duration study [Salmeron and Wood 2007]. Interdiction sets in long duration studies generally consist of components with long restoration times. NDR identifies the set of components to interdict that maximizes short-term disruption This limitation in NDR can be overcome by only considering components with long restoration times (such as buses or substations). The result is analogous to a long-

duration I-DCOPF study. Implementing multi-period cases and component restoration into NDR is conceptually easy, and can be accomplished in future research.

NDR produces a feasible interdiction plan, and solving the DCOPF model with that plan implemented evaluates the plan's cost and provides a valid lower bound on z^*, the optimal objective to I-DCOPF. Our computational experience shows that this bound is very good, and often tight: an optimal interdiction plan from NDR is often the optimal solution to I-DCOPF. This makes the effort to solve NDR worthwhile.

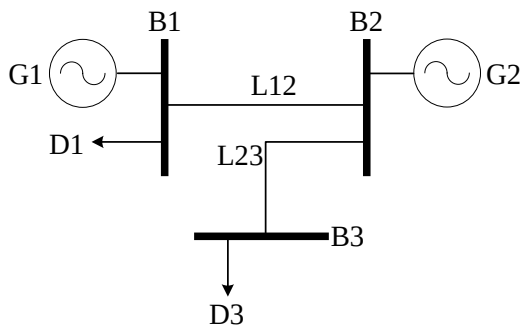

Figure 7. Three bus electrical grid for illustrating NDR formulation.

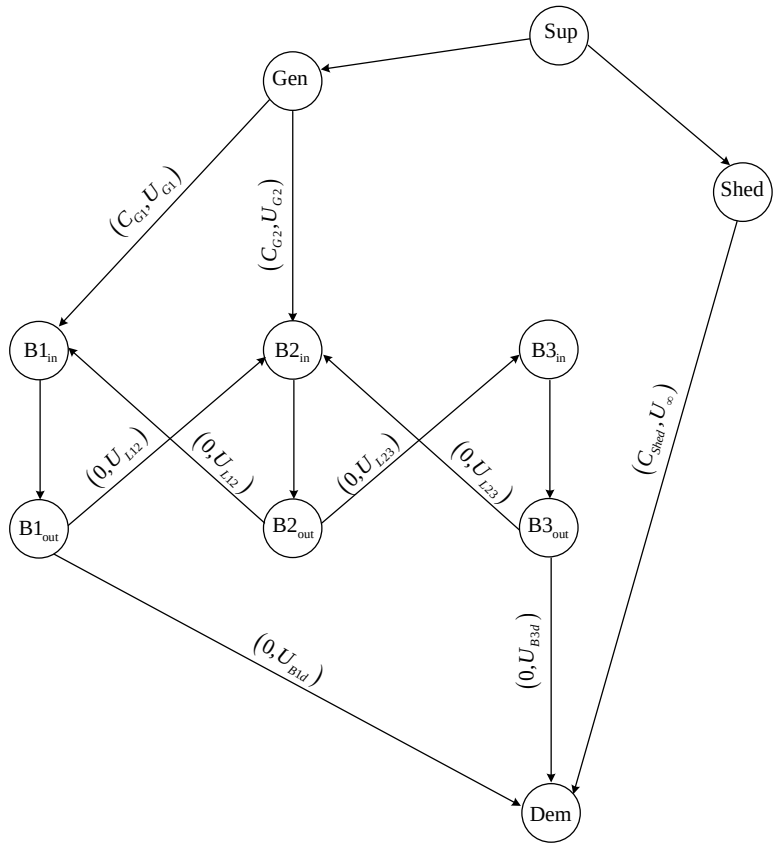

Figure 8. Network approximation for electrical grid shown in Figure 7. Unlabeled arcs have zero cost and infinite capacity.

DCOPF Model		Network Equivalent	
Component type	Component	Component type	Component
Bus	$\{B1\}$	Node	$\{B1_{in}, B1_{out}\}$
Bus	$\{B2\}$	Node	$\{B2_{in}, B2_{out}\}$
Bus	$\{B3\}$	Node	$\{B3_{in}, B3_{out}\}$
Line	$\{L12\}$	Arc	$\{(B1_{out}, B2_{in}), (B2_{out}, B1_{in})\}$
Line	$\{L23\}$	Arc	$\{(B2_{out}, B3_{in}), (B3_{out}, B2_{in})\}$
Generator	$\{G1\}$	Arc	$\{(Gen, B1_{in})\}$
Generator	$\{G2\}$	Arc	$\{(Gen, B2_{in})\}$
Consumer	$\{D1\}$	Arc	$\{(B1_{out}, Dem)\}$
Consumer	$\{D3\}$	Arc	$\{(B3_{out}, Dem)\}$
Interdiction	$\delta \in \Delta$	Interdiction	$\delta \in \Delta$
NA	No equivalent component	Node	$\{Sup, Dem, Gen, Shed\}$
NA	No equivalent component	Arc	$\{(Sup, Shed), (Shed, Dem)\}$

Table 5. Equivalent components for three bus sample grid in DCOPF model and the network equivalent model.

DCOPF Model		Network Equivalent	
Item	Cost	Component	Cost
G1	h_{G1}	$(Gen, B1_{in})$	C_{G1}
G2	h_{G2}	$(Gen, B2_{in})$	C_{G2}
Shed	f	$(Shed, Dem)$	C_{Shed}

Table 6. Equivalent cost data for three bus DCOPF and network equivalent.

DCOPF Model		Network Equivalent	
Item	Capacity or Demand	Component	Capacity
G1	$\overline{P}_{G1}^{Gen}$	$(\text{Gen},\text{B1}_{\text{in}})$	U_{G1}
G2	$\overline{P}_{G2}^{Gen}$	$(\text{Gen},\text{B2}_{\text{in}})$	U_{G2}
L12	$\overline{P}_{L12}^{Line}$	$(\text{B1}_{\text{out}},\text{B2}_{\text{in}}),(\text{B2}_{\text{out}},\text{B1}_{\text{in}})$	U_{L12}
L23	$\overline{P}_{L23}^{Line}$	$(\text{B2}_{\text{out}},\text{B3}_{\text{in}}),(\text{B3}_{\text{out}},\text{B2}_{\text{in}})$	U_{L23}
D1	d_{D1}	$(\text{B1}_{\text{out}},\text{Dem})$	U_{B1d}
D3	d_{D3}	$(\text{B3}_{\text{out}},\text{Dem})$	U_{B3d}

Table 7. Equivalent capacity and demand data for three bus DCOPF and network equivalent.

C. COMPUTATIONAL EXPERIENCE

As with ADKI, we have implemented NDR using the Xpress-MP 2006 optimization system on a 3.72 GHz desktop computer with 3GB of RAM. The NDR MIP is exported and solved using CPLEX 10.0.

In the following discussion, z^* represents the true optimal disruption, $z(\delta_I)$ is the disruption for the incumbent best interdiction plan (and a lower bound on z^*) obtained by solving I-DCOPF using the decomposition method presented in Salmeron and Wood [2007], and $\overline{z}_I$ is the best upper bound on z^* from the same method. With sufficient computational time, $z(\delta_I)$ and $\overline{z}_I$ converge to z^*. The disruption resulting from the optimal interdiction plan recommended by NDR is denoted $z(\delta^*_{NDR})$. We calculate optimality gaps for NDR using $\overline{z}_I$. We report all disruption in terms of total cost.

We first test NDR on the RTS 3-Area network. We assume that only buses are interdicted. Table 8 shows: $z(\delta^*_{NDR})$ and the time required to reach that solution (t_{NDR});

$z(\delta_I)$ and the time required to reach that solution (t_I). Also shown is the incumbent objective value $z(\delta_I)$ and the deviation from z^* at t_{NDR}. In the case of three interdicted buses, NDR exactly predicts z^* after 0.36 seconds. I-DCOPF requires 7.7 seconds to find the corresponding optimal solution. In all cases tested, NDR identifies an optimal interdiction plan, although this need not be not true in general. This example demonstrates that NDR has the potential to produce a quality lower bound for z^* in a fraction of the time required by I-DCOPF.

Number of Interdicted Buses	NDR			I-DCOPF			
	t_{NDR} (sec)	$z(\delta^*_{NDR})$ ($\$\times10^5$)	Deviation from z^*	$z(\delta_I)$ at t_{NDR} ($\$\times10^5$)	Deviation of $z(\delta_I)$ from z^* at t_{NDR}	t_I (sec)	$z(\delta_I)$ ($\$\times10^5$)
2	0.66	8.13	0%	1.45	459%	14.2	8.13
3	0.36	14.34	0%	6.81	111%	7.7	14.34
4	0.61	19.94	0%	11.77	69%	45.6	19.94
5	0.56	23.49	0%	18.29	28%	119.2	23.49

Table 8. Solution times and resulting objective values for NDR and I-DCOPF. Test case is RTS 3 Area, only buses are interdicted. t_I is the time for I-DCOPF to find the optimal interdiction, convergence requires additional time.

Next we test NDR on a portion of the North American power grid. The region considered consists of 5,000+ buses, 6000+ lines (including 1000+ transformers), and 500+ substations. Total system load is close to 70,000 MW, and there are 90,000+ MW of available generation distributed in 500+ generating units. For the purpose of this paper, we refer to this region as the Large Sample Grid (LSG).

We approximate a three-step load-duration curve at each bus consisting of a peak period covering 20% of the time, a normal period covering 50% of the time during which demand is 75% of peak, and a "valley period" covering 30% of the time during which demand is 45% of peak. We also make the cost of load shed dependent on the period, with values 1,000, 800 and 500 $/MWh, respectively. Since NDR does not model

multiple periods, we approximate the solution using the peak demand period. The duration of this study is 360 hours which is sufficient time to restore all interdicted components.

For this test, we again assume that only buses are interdicted. Each scenario runs for 100 minutes (6000 seconds) or until a gap of ε = 1% is reached, whichever occurs first.

Table 9 displays results for this test. In the case with three interdicted buses, I-DCOPF outperforms NDR both in speed and quality of solution ($z(\delta_I) > z(\delta^*_{NDR})$). In all other cases, NDR predicts interdictions at least as good as those found by I-DCOPF, always with significant time savings. I-DCOPF only converges within the allotted 100 minutes in the case with two interdicted buses. The best upper bound on optimal cost ($\overline{z}_I$) is shown for the cases in which I-DCOPF did not converge. Comparing the solution of NDR to the best bound from I-DCOPF shows how close NDR is to the true optimal solution. In the case of four interdicted buses, both the NDR and I-DCOPF objective values are within approximately 15% of the true optimal value. A similar calculation shows that the NDR objective value is within approximately 20% of the true objective value for the case with seven interdicted buses, while the I-DCOPF objective value is only within 58%.

Number Interdicted Buses	NDR		I-DCOPF			
	t_{NDR} (sec)	$z(\delta^*_{NDR})$ ($\$\times 10^8$)	$z(\delta_I)$ at t_{NDR} ($\$\times 10^8$)	t_I (sec)	$z(\delta_I)$ ($\$\times 10^8$)	$\overline{z}_I$ ($\$\times 10^8$)
2	49	3.23	2.16	485	3.23	-
3	58	2.81	2.94	3610	3.65	3.91
4	25	3.96	1.85	5757	3.39	4.82
5	20	5.09	2.19	3504	5.09	5.87
6	18	5.67	2.40	187	5.46	6.92
7	17	6.70	3.41	3191	5.09	8.05

Table 9. Results for NDR and I-DCOPF applied to the Large Sample Grid. The t_I column gives the time for I-DCOPF to find the incumbent interdiction plan. Maximum allowed time is 6000 seconds. The best bound on cost ($\overline{z}_I$) is shown for the cases when I-DCOPF does not find the optimal interdiction in the allotted time. Duration of study is 360 hours.

NDR has great potential when studying interdictions against defended networks. Solving I-DCOPF for a realistically sized, defended power grid is extremely difficult and is the principal obstacle to solving DAD. To illustrate this, we repeat the above experiment on LSG but with ten buses defended. Again we assume that only buses are interdicted and we limit each scenario to 100 minutes of computation time.

Table 10 displays the results of this experiment. For all of the cases considered, NDR outperforms I-DCOPF in terms of solution speed and solution cost. I-DCOPF does not converge within the allowed time for any of the cases.

Table 11 shows the optimality gap for $z(\delta^*_{NDR})$ and $z(\delta_I)$ for both the undefended and defended network (based on the data in Tables 9 and 10, respectively). The optimality gap is based on $\overline{z}_I$, the best upper bound on z^* found by I-DCOPF in the allotted time. The optimality gap for I-DCOPF on the defended network is significantly larger than that for the undefended network, demonstrating that, for these scenarios, the defended network is more difficult to solve. Although the values for NDR show a general upward trend between undefended and defended, the effect is not as pronounced as for I-DCOPF.

Number of Interdicted Buses	NDR		I-DCOPF			
	t_{NDR} (sec)	$z(\delta^*_{NDR})$ ($\$\times10^8$)	$z(\delta_I)$ at t_{NDR} ($\$\times10^8$)	t_I (sec)	$z(\delta_I)$ ($\$\times10^8$)	$\overline{z}_I$ ($\$\times10^8$)
2	178	2.50	1.84	4673	2.42	2.68
3	269	3.00	2.16	3944	2.16	3.46
4	302	3.50	2.17	115	2.17	4.35
5	284	4.00	2.33	4670	2.74	5.25
6	71	4.14	2.33	158	2.83	6.14
7	48	5.30	2.67	140	3.25	7.10

Table 10. Result of NDR and I-DCOPF for the Large Sample Grid with ten buses defended. NDR outperforms I-DCOPF in terms of speed and quality of solution in all cases. I-DCOPF reached the maximum allowed time of 6000 seconds in all cases. The duration of this study is 360 hours.

Number of Interdicted Buses	Optimality Gap for Undefended Network		Optimality Gap with Ten Buses Defended	
	NDR	I-DCOPF	NDR	I-DCOPF
2	0%	0%	7%	11%
3	39%	7%	15%	60%
4	22%	42%	24%	101%
5	15%	15%	31%	92%
6	22%	27%	48%	117%
7	20%	58%	34%	118%

Table 11. Optimality gap for NDR and I-DCOPF for undefended and ten-bus defense. Optimality gap is based on $\overline{z}_I$,the best upper bound on z^* found in the allowed 6000 seconds and the lower bounds $z(\delta^*_{NDR})$ and $z(\delta_I)$ from the NDR and I-DCOPF, respectively.

The DKI algorithm for DAD can be implemented with NDR solving the AD subproblem. The danger with this is that NDR may under-predict the disruption of a given interdiction plan, thus over-predicting the value of that defense. However, the rapid solution times of NDR make it a useful adjunct for studying DAD, and we solve DAD here, approximately, for the LSG Area using this technique. We only consider

substations, with sufficient resources to interdict five and defend ten. We allow fifty iterations of the NDR-DKI interaction, and choose the best three defenses for further analysis using I-DCOPF (the fifty iterations required approximately 5.5 hours of computational time). Figure 9 shows the total cost, $z(\delta^*_{NDR})$, at each iteration, and Table 12 shows the complete results, including $z(\delta^*_{NDR})$, peak power shed, and total energy shed, for the top three defensive plans as well as for the undefended case. We evaluate the top three defensive plans using I-DCOPF with a maximum computation time of eight hours. Table 13 shows the results: $z(\delta_I)$ and $\overline{z}_I$ (the lower and upper bound on z^*, respectively), and optimality gap. For example, with Defensive Plan 1, z^* is bounded on the interval [5.48, 8.53] ($\$\times 10^8$), which is an improvement over the undefended case. Figure 10 plots the upper and lower bound on z^* for Defensive Plan 1 using I-DCOPF, demonstrating the slow rate of convergence of the upper bound.

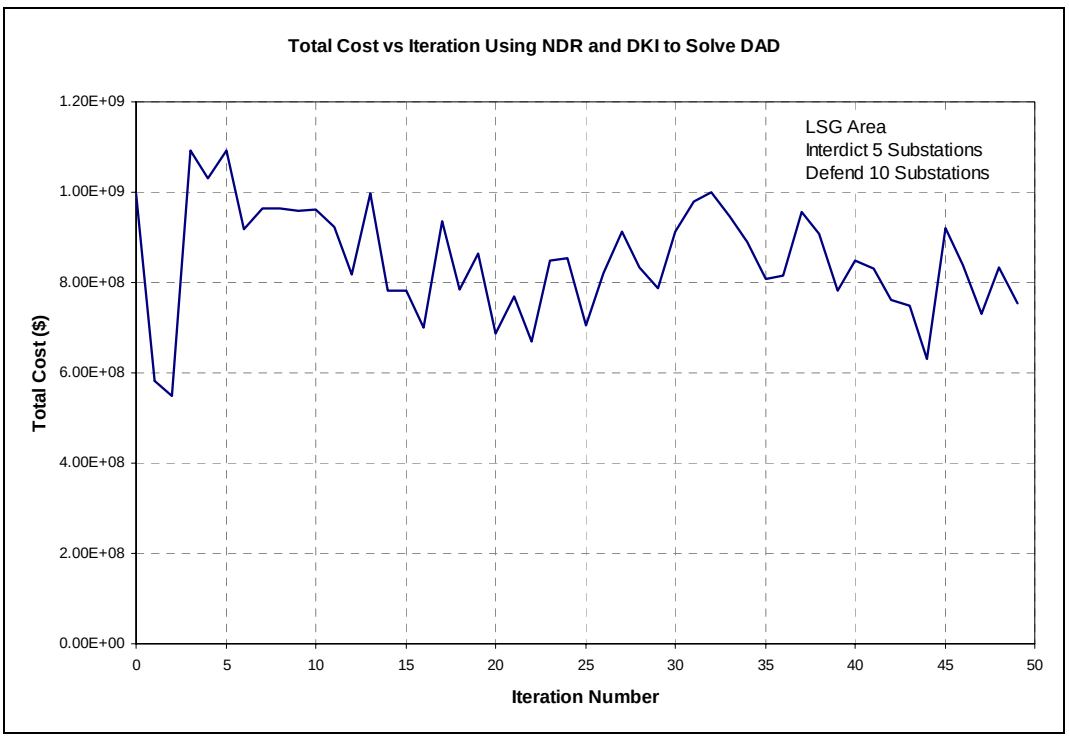

Figure 9. Iterations to solve DAD for the Large Sample Grid Area using NDR and DKI. Five substations are interdicted and ten defended. The optimal defense is found at iteration 2. Defensive plans considered at iteration 1 and 44 are the second and third best respectively. Iteration 0 is the undefended case.

Defensive Plan	Iteration Number	$z(\delta^*_{NDR})$ ($\$\times 10^8$)	Peak Power Shed (MW)	Total Energy Shed (GWh)
1	2	5.48	4009.8	402.9
2	1	5.81	2851.0	478.1
3	44	6.32	3911.6	529.1
N/A	0	9.97	5679.4	959.0

Table 12. Complete results for top three defensive plans and undefended case from Figure 9. The iteration number corresponds to the iterations of Figure 9.

Defensive Plan	$z(\delta_I)$ ($\$\times 10^8$)	$\overline{z}_I$ ($\$\times 10^8$)	Optimality Gap
1	5.48	8.53	56%
2	5.81	8.82	52%
3	7.12	9.76	37%

Table 13. Results of I-DCOPF for LSG Area using the best three defensive plans from Figure 9. Maximum algorithm time is 8 hours. $z(\delta_I)$ and $\overline{z}_I$ are lower and upper bounds, respectively, on the true optimal solution.

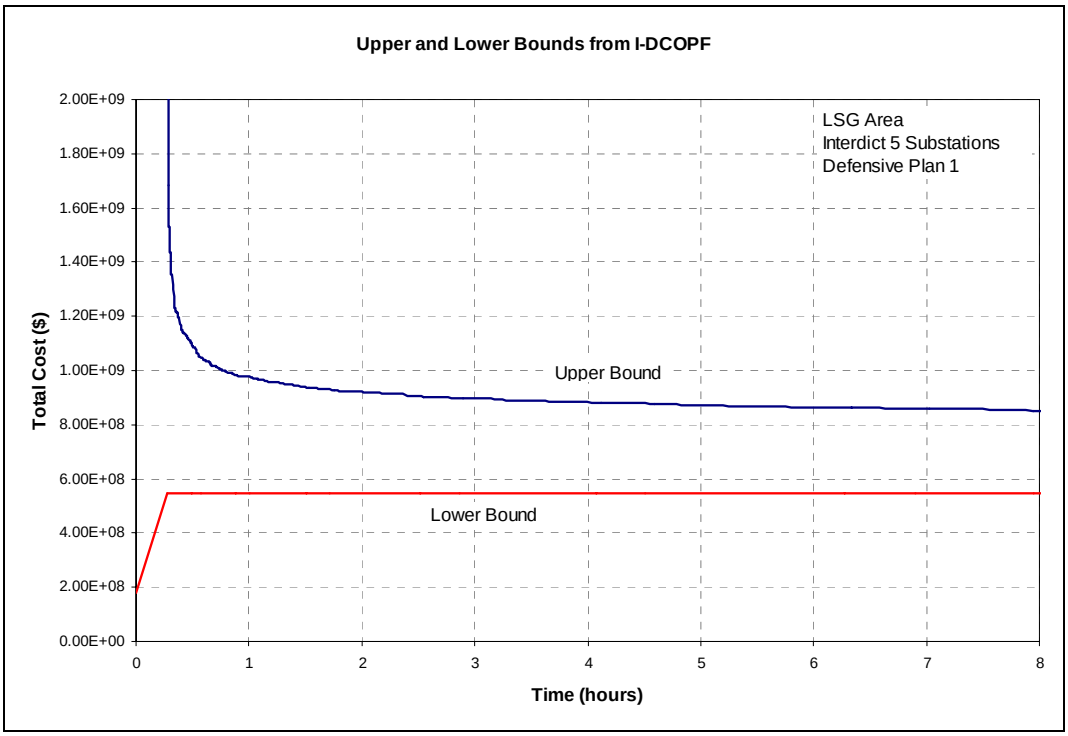

Figure 10. Upper and Lower Bound on z^* from I-DCOPF for Defensive Plan 1, showing the slow rate of convergence of the Upper Bound

IV. CONCLUSIONS AND RECOMMENDATIONS

This thesis has developed mathematical models to identify optimal sets of components in an electrical power grid, the defense of which would minimize the disruption caused by an adversary's attack. The ultimate goal of this research is to apply these models to actual systems in an effort to enhance the resilience of the U.S. electrical power grid.

In a trilevel defender-attacker-defender (DAD) model, a defender attempts to minimize potential damage to a system by protecting key components with limited (defensive) resources, while an attacker seeks to inflict maximum damage by destroying vulnerable components using limited (offensive) resources. With fixed defenses, the DAD problem becomes a bilevel attacker-defender (AD) problem that optimizes system interdiction given optimal, post-interdiction, system operation. Previous research has developed optimization models, called I-DCOPF, to solve (or approximate the solution of) the AD problem for electrical power grids.

We develop the "Defense of Known Interdictions" model (DKI) that is part of a decomposition algorithm that can solve the defensive DAD problem for realistically-sized electrical networks, provided that I-DCOPF can be solved efficiently. Unfortunately, a lack of efficiency in this regard proves to be a major obstacle. Our computational experience indicates that solving the I-DCOPF model for a large network is extremely difficult, and this difficulty greatly increases when a select group of grid components are defended.

We explore one method to reduce the solution time for I-DCOPF. Currently, I-DCOPF is solved using a decomposition-based algorithm in which a coordinating (master) problem and an operating (sub-) problem yield upper and lower bounds, respectively, on the optimal solution. By relaxing the electrical impedance constraints in the operating problem, we approximate electrical power grid behavior as a minimum cost network flow. Using this approximation, we develop a model called Network Dual Relaxation (NDR) that quickly generates a solution that may be close to the optimal

solution of the original I-DCOPF, and could be solved even faster by decomposition (not implemented in this work). For the scenarios tested, NDR produces high-quality lower bounds; currently, however, the only way to guarantee such quality is by solving the exact I-DCOPF problem.

We recommend that future research implement load-duration curves and component restoration into NDR. This would allow NDR to better approximate I-DCOPF solutions for both long and short-term problems.

We also recommend that future research examine methods to improve the upper bound for I-DCOPF. A model that quickly predicts the upper bound for I-DCOPF, coupled with NDR, could greatly reduce I-DCOPF solution times and help solve realistically-sized DAD problems, and help with the final goal of enhancing the security of the U.S. electrical power grid.

APPENDIX A. DCOPF MODEL

A.1 DC OPTIMAL POWER FLOW MODEL

From Salmeron, Wood, and Baldick [2005]

Single-Period Case

Sets:

$i \in I$	set of buses
$i \in I^0$	subset of reference buses ($\| I^0 \| =$ number of islands in the system)
$g \in G$	set of generating units
$g \in G_i$	subset of generating units connected to bus i
$l \in L$	set of AC transmission lines (and transformers modeled as AC lines)
$l \in L^{DC}$	set of DC transmission lines
$l \in L_i^{Bus}$	subset of AC and DC lines connected to bus i
$l \in L_l^{Par}$	subset of lines in parallel with line l
$c \in C$	set of consumer sectors
$s \in S$	set of substations
$i \in I_s$	subset of buses at substation s
$l \in L_s^{Sub}$	subset of AC and DC lines connected to substation s (including transformers, which are represented by lines)

Parameters (units, if applicable):

$o(l),\ d(l)$	origin and destination buses, respectively of AC or DC line l (more than one line with the same $o(l)$, $d(l)$ may exist)
$i(g)$	bus for generator g, i.e., $g \in G_{i(g)}$

$s(i)$	substation $s \in S$ associated with bus $i \in I_s$
d_{ic}	load of consumer sector *c* at bus i (MW)
$\overline{P}_l^{Line}$	transmission capacity for AC or DC line l (MW)
$\overline{P}_g^{Gen}$	maximum output from generator g (MW)
r_l, x_l	resistance and reactance of AC line l, respectively (p.u.). (We assume $x_l >> r_l$)
B_l	series susceptance for AC line l, calculated as $B_l = x_l/(r_l^2 + x_l^2)$ (p.u.)
R_l, P_l, E_l	resistance (Ω), set point (MW) and scheduled voltage (kV) for DC line l, respectively
μ_l	transmission coefficient (= 1 – loss coefficient) on DC line l, calculated as $\mu_l = 1 - I^2R/P = 1 - P^2R/(E^2P) = 1 - PR/E^2$ (p.u.)
h_g	generation cost for unit g ($/MWh)
f_{ic}	load-shedding cost for customer sector c at bus i ($/MWh)

Decision variables (units):

P_g^{Gen}	generation from unit g (MW)
P_l^{Line}	power flow on AC line l (MW)
U_l, V_l	power flow from the "from" to the "to" bus or vice versa, respectively, for DC line l (MW). Remark: DC lines are modeled as follows: If $U_l \geq 0$ MW are sent from the "from" bus, then $(1-\mu_l)U_l$ MW are received at the "to" bus. Similarly, we use $V_l \geq 0$ to model flow from the "to" bus to the "from" bus.
S_{ic}	load shed (unmet) for customer sector *c* at bus i (MW)

θ_i phase angle at bus i (radians)

Formulation:

$$\text{(DCOPF):} \quad \min_{P^{Gen},P^{Line},S,\theta,U,V} \quad \sum_g h_g P_g^{Gen} + \sum_i \sum_{c|d_{ic}>0} f_{ic} S_{ic} \qquad (\$/\text{MWh}) \tag{A.1}$$

s.t.

$$P_l^{Line} = B_l\,(\theta_{o(l)} - \theta_{d(l)}) \qquad \forall\, l \in L \tag{A.2}$$

$$\sum_g P_g^{Gen} - \sum_{\substack{l\in L|\\ o(l)=i}} P_l^{Line} + \sum_{\substack{l\in L|\\ d(l)=i}} P_l^{Line} + \sum_{\substack{l\in L^{DC}|\\ o(l)=i}} (-U_l + \mu_l V_l) + \sum_{\substack{l\in L^{DC}|\\ d(l)=i}} (\mu_l U_l - V_l) = \sum_{c|d_{ic}>0} (d_{ic} - S_{ic}) \quad \forall\, i \in I \tag{A.3}$$

$$-\overline{P}_l^{Line} \le P_l^{Line} \le \overline{P}_l^{Line} \qquad \forall\, l \in L \cup L^{DC} \tag{A.4}$$

$$\underline{P}_g^{Gen} \le P_g^{Gen} \le \overline{P}_g^{Gen} \qquad \forall\, i, \forall g \in G_i \tag{A.5}$$

$$0 \le S_{ic} \le d_{ic} \qquad \forall\, i, c|d_{ic} > 0 \tag{A.6}$$

$$\theta_i = 0 \qquad \forall\, i \in I^0 \tag{A.7}$$

Remark: If all DC loss coefficients and all generating costs are non-zero, an optimal solution to the above model should not contain any crossed-flows (i.e., $U_l > 0, V_l > 0$ simultaneously) on the DC lines. However, if any of those hypotheses fails, multiple optimal solutions may occur, some of which may involve crossed-flows on the same DC line. To ensure the output is displayed correctly, the following post-processing of the solution can be made:

Power across DC line $l = \mu_l U_l - \mu_l V_l,\ \forall l \in L^{DC}$.

<u>Multi-Period Case</u>

Our DCOPF model must be extended to consider periods (or blocks of hours) for two reasons:

(1) Demand variation. DCOPF must accommodate changes when we consider a staircase function to represent our load-duration curve (LDC),

(2) Repair times. As the system is restored after interdiction, the grid topology undergoes changes that must also be incorporated into the DCOPF model.

Each combination of an LDC's period-subperiod pair and a restoration stage involves a new DCOPF computation. In what follows, we generically call each of these triplets a "Time Period," or simply a "Period" (which must not be confused with the period-subperiod structure for the LDC).

According to the above, we must extend our notation for the single-period DCOPF in order to capture changes in our data (load and shedding cost) and our decision variables (all of them) for each of these periods.

We need substantially new notation for the problem with time periods.

New sets and parameters:

$t \in T$, set of periods

D_t, duration of period *t* (hours)

Extended parameters and variables: Same definition as in single-period DCOPF, but now for every period *t*:

$$d_{tic},\ f_{tic},\ P_{tg}^{Gen},\ P_{tl}^{Line},\ U_{tl}, V_{tl},\ S_{tic},\ \theta_{ti}$$

Model changes:

$$\text{(DCOPF):}\quad \min_{P^{Gen},P^{Line},S,\theta,U,V} \sum_t D_t \left(\sum_g h_g P_{tg}^{Gen} + \sum_i \sum_{c|d_{tic}>0} f_{tic} S_{tic} \right) \qquad (\$)$$

Notice that the new objective factors in the duration of each level of disruption, given by different amounts of load shedding, S_{tic} ,and their costs, f_{tic}, which are period-dependent.

Likewise, assuming a given interdiction plan, the new constraints for each period must reflect those in (A.2)-(A.7), replicated for every period *t*, but ensuring that only the non-interdicted or repaired components are included in the model. However, in order to establish such formulation formally, we must first introduce new notation, which in turn will allow us to formulate the interdiction model.

A.2 INTERDICTION MODEL

New sets and parameters:

$G^* \subseteq G$, $L^* \subseteq L \cup L^{DC}$, $I^* \subseteq I$, $S^* \subseteq S$, subsets of interdictable generators, lines, buses, and substations, respectively. These are "directly interdictable components."

$\xi = L^* \cup G^* \cup B^* \cup S^*$, set of all (directly) interdictable elements.

$G^{**} \subseteq G$, $L^{**} \subseteq L \cup L^{DC}$, $I^{**} \subseteq I$, $S^{**} \subseteq S$, subsets of directly or indirectly interdictable generators, lines, buses, and substations, respectively.

$$\beta_{t,e} = \begin{cases} 1, \text{ if component } e \text{ remains unrepaired in time period } t \text{ after being attacked} \\ 0, \text{ if component } e \text{ is repaired before time period } t \text{ after being attacked} \end{cases}, \text{ for}$$

$t \in T$, $e \in \xi$. Remark: $\beta_{t,l}^{\text{Line}}$, $\beta_{t,i}^{\text{Bus}}$, $\beta_{t,g}^{\text{Gen}}$, and $\beta_{t,s}^{\text{Sub}}$ denote $\beta_{t,e}$ when *e*=*l* is line, or *e*=*i* is a bus, or *e*=*g* is a generator, or *e*=*s* is a substation, respectively.

$L_t^{**} \subset L \cup L^{DC}$, subset of lines that might remain interdicted (directly or indirectly) in period *t*. Constructed as follows:

$l \in L_t^{**}$ if either:

$$\beta_{\text{t,l}}^{\text{Line}} = 1, \text{ or}$$
$$\beta_{\text{t,i}}^{\text{Bus}} = 1 \text{ for some } i \mid l \in L_i^{Bus}, \text{ or}$$
$$\beta_{\text{t,s}}^{\text{Sub}} = 1 \text{ for some } s \mid l \in L_s^{Sub}, \text{ or}$$
$$\beta_{\text{t,ll}}^{\text{Line}} = 1 \text{ for some } ll \mid ll \in L_l^{Par}$$

$G_t^{**} \subset G$, subset of generators that might remain interdicted (directly or indirectly) in period *t*.

$I_t^{**} \subset I$, subset of buses that might remain interdicted (directly or indirectly) in period *t*.

$S_t^{**} \subset S$, subset of substations that might remain interdicted (directly) in period *t*.

$$\lambda_l^L = \begin{cases} 1 \text{ if } l \in L^* \\ 0 \text{ otherwise} \end{cases}$$

$$\lambda_{t,l}^L = \begin{cases} 1 \text{ if } l \in L_t^{**} \\ 0 \text{ otherwise} \end{cases}$$

$$\lambda_g^G = \begin{cases} 1 \text{ if } g \in G^* \\ 0 \text{ otherwise} \end{cases}$$

$$\lambda_{t,g}^G = \begin{cases} 1 \text{ if } g \in G_t^{**} \\ 0 \text{ otherwise} \end{cases}$$

$$\lambda_i^I = \begin{cases} 1 \text{ if } i \in I^* \\ 0 \text{ otherwise} \end{cases}$$

$$\lambda_s^S = \begin{cases} 1 \text{ if } s \in S^* \\ 0 \text{ otherwise} \end{cases}$$

$$\lambda_i^0 = \begin{cases} 1 \text{ if } i \in I^0 \\ 0 \text{ otherwise} \end{cases}$$

M_g^{Gen}, M_l^{Line}, M_i^{Bus}, M_s^{Sub} : resource required to interdict generator *g*, line *l*, bus *i*, and substation *s*, respectively.

M , total interdiction resource available to terrorists.

New decision variables:

$\delta_g^{Gen}, \delta_l^{Line}, \delta_i^{Bus}, \delta_s^{Sub}$, binary variables that take the value 1 if generator *g*, line *l*, bus *i* or substation *s*, respectively, are interdicted, and are 0 otherwise.

Interdiction Model

Here, we introduce the model that will be referred to as the (linearized) interdiction model, I-DCOPF. This formulation linearizes the admittance equation in presence of interdiction. For example, if a line can be interdicted by attacking the line or the buses that it connects, the admittance equation would be

$$P_l = B_l(\theta_{o(l)} - \theta_{d(l)})(1-\delta_l)(1-\delta_{o(l)})(1-\delta_{d(l)}),$$

where the (1-δ) terms force the power across the line to be zero if the line is interdicted, without imposing any further restriction on the phase angles at each connecting bus. To linearize the right-hand side of the above equality, we consider the two following linear constraints:

$$\begin{cases} P_l - B_l(\theta_{o(l)} - \theta_{d(l)}) \le M_l(\delta_l + \delta_{o(l)} + \delta_{d(l)}) \\ P_l - B_l(\theta_{o(l)} - \theta_{d(l)}) \ge -M_l(\delta_l + \delta_{o(l)} + \delta_{d(l)}) \end{cases},$$

where M_l can be taken as $M_l = \overline{P}_l + B_l\overline{\theta}_{o(l),d(l)}$, and $\overline{\theta}_{i,k}$ is an upper bound on the absolute value of the maximum phase angle difference between adjacent buses *i,k* (e.g., $\overline{\theta}_{i,k} = 1$ radian).

The I-DCOOPF model formulation is:

$$\text{(I-DCOPF):} \quad \max_{\delta} \quad \min_{(P^{Gen}, P^{Line}, S, \theta, U, V)} \quad \sum_{t \in T} D(t).\left\{ \sum_g h_g P_{t,g}^{Gen} + \sum_i \sum_{c|d_{t,i,c}>0} f_{t,i,c} S_{t,i,c} \right\}$$

s.t.

$$P_{t,l}^{Line} - B_l(\theta_{t,o(l)} - \theta_{t,d(l)}) \le M_l(\lambda_l^{Line}\beta_{t,l}^{Line}\delta_l^{Line} + \sum_{i \in I^*|l \in L_i^{Bus}} \beta_{t,i}^{Bus}\delta_i^{Bus} + \sum_{s \in S^*|l \in L_s^{Sub}} \beta_{t,s}^{Sub}\delta_s^{Sub} + \sum_{ll \in L^*|ll \in L_l^{Line}} \beta_{t,ll}^{Line}\delta_{ll}^{Line}) \qquad \forall l \in L, \forall t$$

$$P_{t,l}^{Line} - B_l(\theta_{t,o(l)} - \theta_{t,d(l)}) \ge -M_l(\lambda_l^{Line}\beta_{t,l}^{Line}\delta_l^{Line} + \sum_{i \in I^*|l \in L_i^{Bus}} \beta_{t,i}^{Bus}\delta_i^{Bus} + \sum_{s \in S^*|l \in L_s^{Sub}} \beta_{t,s}^{Sub}\delta_s^{Sub} + \sum_{ll \in L^*|ll \in L_l^{Line}} \beta_{t,ll}^{Line}\delta_{ll}^{Line}) \qquad \forall l \in L, \forall t$$

$$\sum_{g \in G_i} P_{t,g}^{Gen} - \sum_{l \in L|o(l)=i} P_{t,l}^{Line} + \sum_{l \in L|d(l)=i} P_{t,l}^{Line} + \sum_{\substack{l \in L^{DC}| \\ o(l)=i}} (-U_l + \mu_l V_l) + \sum_{\substack{l \in L^{DC}| \\ d(l)=i}} (\mu_l U_l - V_l) + \sum_{c|d_{tic}>0} S_{t,i,c} = \sum_{c|d_{tic}>0} d_{t,i,c} \quad \forall i,t$$

$$P_{t,l}^{Line} \le \bar{P}_l^{Line} \qquad \forall t, l \in L \setminus L_t^{**}$$

$$P_{t,l}^{Line} \le \bar{P}_l^{Line}(1-\delta_l^{Line}) \qquad \forall t, l \in l \in L \cap L^*,\ \beta_{t,l}^{Line}=1$$

$$P_{t,l}^{Line} \le \bar{P}_l^{Line}(1-\delta_i^{Bus}) \qquad \forall t, l, i \,\big|\, i \in I^*,\ l \in L \cap L_i^{Bus}, \beta_{t,i}^{Bus}=1$$

$$P_{t,l}^{Line} \le \bar{P}_l^{Line}(1-\delta_s^{Sub}) \qquad \forall t, l, s \,\big|\, s \in S^*, l \in L \cap L_s^{Sub}, \beta_{t,s}^{Sub}=1$$

$$P_{t,l}^{Line} \le \bar{P}_l^{Line}(1-\delta_{ll}^{Line}) \qquad \forall t, l, ll \,\big|\, ll \in L^*, ll \in L \cap L_l^{Par}, \beta_{t,ll}^{Line}=1$$

$$P_{t,l}^{Line} \ge -\bar{P}_l^{Line} \qquad \forall t, l \in L \setminus L_t^{**}$$

$$P_{t,l}^{Line} \ge -\bar{P}_l^{Line}(1-\delta_l^{Line}) \qquad \forall t, l \in L \cap L^*,\ \beta_{t,l}^{Line}=1$$

$$P_{t,l}^{Line} \ge -\bar{P}_l^{Line}(1-\delta_i^{Bus}) \qquad \forall t, l, i \,\big|\, i \in I^*,\ l \in L \cap L_i^{Bus}, \beta_{t,i}^{Bus}=1$$

$$P_{t,l}^{Line} \ge -\bar{P}_l^{Line}(1-\delta_s^{Sub}) \qquad \forall t, l, s \,\big|\, s \in S^*, l \in L \cap L_s^{Sub}, \beta_{t,s}^{Sub}=1$$

$$P_{t,l}^{Line} \ge -\bar{P}_l^{Line}(1-\delta_{ll}^{Line}) \qquad \forall t, l, ll \,\big|\, ll \in L^*, ll \in L \cap L_l^{Par}, \beta_{t,ll}^{Line}=1$$

$$U_{t,l}^{Line} \le \bar{P}_l^{Line} \qquad \forall t, l \in L^{DC} \setminus L_t^{**}$$

$$U_{t,l}^{Line} \le \bar{P}_l^{Line}(1-\delta_l^{Line}) \qquad \forall t, l \in l \in L^{DC} \cap L^*,\ \beta_{t,l}^{Line}=1$$

$$U_{t,l}^{Line} \le \bar{P}_l^{Line}(1-\delta_i^{Bus}) \qquad \forall t, l, i \,\big|\, i \in I^*,\ l \in L^{DC} \cap L_i^{Bus}, \beta_{t,i}^{Bus}=1$$

$$U_{t,l}^{Line} \le \bar{P}_l^{Line}(1-\delta_s^{Sub}) \qquad \forall t, l, s \,\big|\, s \in S^*, l \in L^{DC} \cap L_s^{Sub}, \beta_{t,s}^{Sub}=1$$

$$U_{t,l}^{Line} \le \bar{P}_l^{Line}(1-\delta_{ll}^{Line}) \qquad \forall t, l, ll \,\big|\, ll \in L^*, ll \in L^{DC} \cap L_l^{Par}, \beta_{t,ll}^{Line}=1$$

$$V_{t,l}^{Line} \le \bar{P}_l^{Line} \qquad \forall t, l \in L^{DC} \setminus L_t^{**}$$

$$V_{t,l}^{Line} \le \bar{P}_l^{Line}(1-\delta_l^{Line}) \qquad \forall t, l \in l \in L^{DC} \cap L^*,\ \beta_{t,l}^{Line}=1$$

$$V_{t,l}^{Line} \le \bar{P}_l^{Line}(1-\delta_i^{Bus}) \qquad \forall t, l, i \,\big|\, i \in I^*,\ l \in L^{DC} \cap L_i^{Bus}, \beta_{t,i}^{Bus}=1$$

$$V_{t,l}^{Line} \le \bar{P}_l^{Line}(1-\delta_s^{Sub}) \qquad \forall t, l, s \,\big|\, s \in S^*, l \in L^{DC} \cap L_s^{Sub}, \beta_{t,s}^{Sub}=1$$

$$V_{t,l}^{Line} \le \bar{P}_l^{Line}(1-\delta_{ll}^{Line}) \qquad \forall t, l, ll \,\big|\, ll \in L^*, ll \in L^{DC} \cap L_l^{Par}, \beta_{t,ll}^{Line}=1$$

$$P_{t,g}^{Gen} \le \bar{P}_g^{Gen} \qquad \forall t, g \notin G_t^{**}$$

$$P_{t,g}^{Gen} \le \bar{P}_g^{Gen}(1-\delta_g^{Gen}) \qquad \forall t, g \mid g \in G^*, \beta_{t,g}^{Gen}=1$$

$$P_{t,g}^{Gen} \le \bar{P}_g^{Gen}(1-\delta_{i(g)}^{Bus}) \qquad \forall t, g \mid i(g) \in I^*, \beta_{t,i(g)}^{Bus}=1$$

$$P_{t,g}^{Gen} \le \bar{P}_g^{Gen}(1-\delta_{s(i(g))}^{Sub}) \qquad \forall t, g \mid s(i(g)) \in S^*, \beta_{t,s(i(g))}^{Sub}=1$$

$$S_{t,i,c} \le d_{t,i,c} \qquad \forall t,i,c \mid d_{t,i,c} > 0$$

$$\theta_{t,i} = 0 \;\; \forall t, i \in I^0$$

$$P_{t,g}^{Gen} \ge 0 \qquad \forall t, g$$

$$P_{t,l}^{Line} \;\; \text{unrestricted} \qquad \forall t, l \in L$$

$$U_{t,l}^{Line} \ge 0 \qquad \forall t, l \in L$$

$$V_{t,l}^{Line} \ge 0 \qquad \forall t, l \in L$$

$$S_{t,i,c} \ge 0 \qquad \forall t,i,c \mid d_{t,i,c} > 0$$

$$\theta_{t,i} \;\; \text{unrestricted} \qquad \forall t, i \notin I^0$$

$$\sum_{g \in G^*} M_g^{Gen} \, \delta_g^{Gen} + \sum_{l \in L^*} M_l^{Line} \, \delta_l^{Line} + \sum_{i \in I^*} M_i^{Bus} \, \delta_i^{Bus} + \sum_{s \in S^*} M_s^{Sub} \, \delta_s^{Sub} \le M$$

All δ-variables are binary $\{0,1\}$.

THIS PAGE INTENTIONALLY LEFT BLANK

LIST OF REFERENCES

Alvarez, R. (2004). "Interdicting Electric Power Grids," Master's Thesis, Operations Research Department, Naval Postgraduate School, Monterey, California.

Brown G., Carlyle, M., Salmeron, J. and Wood, K. (2005). "Analyzing the Vulnerability of Critical Infrastructure to Attack, and Planning Defenses," *INFORMS Tutorials in Operations Research* , Institute for Operations Research and the Management Sciences, Hanover, MD, 102-123.

Brown G., Carlyle, M., Salmeron, J. and Wood, K. (2006). "Defending Critical Infrastructure," *Interfaces*, Vol. 36(6), 530-544.

Carnal, D. D. (2005). "An Enhanced Implementation of Models for Electrical Power Grid Interdiction," Master's Thesis, Operations Research Department, Naval Postgraduate School, Monterey, California.

Church, R.L., and Scaparra, M.L. (2006). "A Bi-Level Mixed Programme for Critical Infrastructure Protection Planning," Working Paper 116, Kent Business School, Canterbury, UK.

IEEE Reliability Test Data (1999). "The IEEE Reliability Test System – 1996," *IEEE Transactions on Power Systems*, Vol. 14, 1010-1020.

Israeli, E. (1999). "System Interdiction and Defense," PhD Dissertation, Operations Research Department, Naval Postgraduate School, Monterey, California.

Israeli, E. and Wood, R.K. (2002). "Shortest-Path Network Interdiction," *Networks*, Vol. 40, 97-111.

NERC (2004). "Physical Security – Substations," http://www.esisac.com/publicdocs/Guides/secguide_ps-s_1.0_BOTapprvd15oct2004.pdf Last accessed 25 FEB 2007.

Overbye, T.J., Cheng, X. and Sun, Y. (2004). "A Comparison of the AC and DC Power Flow Models for LMP Calculations," *Proceedings of the 37th Hawaii International Conference on System Sciences (HICSS-37 2004)*. Big Island, HI.

Purchala, K., Meeus, L., Van Dommelen, D. and Belmans, R. (2005). "Usefulness of DC Power Flow for Active Power Flow Analysis," *Power Engineering Society General Meeting, 2005*, San Francisco, CA, 454-459.

Salmeron, J. and Wood, K. (2007). "Vulnerability Analysis of Large-Scale Electrical Power Grids," Working Paper, Naval Postgraduate School, Monterey, California.

Salmeron, J., Wood, K. and Baldick, R. (2003). "Optimizing Electric Grid Design Under Asymmetric Threat," Technical Report NPS-OR-03-002, Naval Postgraduate School, Monterey, California.

Salmeron, J., Wood, K. and Baldick, R. (2004-I). "Analysis of Electric Grid Security Under Terrorist Threat," *IEEE Transactions on Power Systems*, 19, 905 – 912.

Salmeron, J., Wood, K., and Baldick, R. (2004-II). "Optimizing Electric Grid Design Under Asymmetric Threat (II)," Technical Report NPS-OR-04-001, Naval Postgraduate School, Monterey, California.

Salmeron, J., Wood, K. and Baldick, R. (2005). "Optimizing Electric Grid Design Under Asymmetric Threat (III)," Technical Report NPS-OR-05-005, Naval Postgraduate School, Monterey, California.

Schneider, T. L. (2005). "Analysis of the Interdiction and Protection of the United States Power Grid," Master's Thesis, Operations Research Department, Naval Postgraduate School, Monterey, California.

U.S.-Canada Power System Outage Task Force. (2004). "Final Report on the August 14, 2003 Blackout in the United States and Canada: Causes and Recommendations," https://reports.energy.gov/BlackoutFinal-Web.pdf
Last accessed 25 FEB 2007.

U.S. Department of Energy. (2002). "National Transmission Grid Study,"
http://www.ferc.gov/industries/electric/indus-act/transmission-grid.pdf.
Last accessed 25 FEB 2007.

U.S. Department of Homeland Security. (2003). *National Strategy for the Physical Protection of Critical Infrastructures and Key Assets* (GPO Stock Number 040-000-00762-8). Washington, DC: U.S. Government Printing Office.

Wood, A. J. and Wollenberg, B. F. (1996). *Power Generation, Operation and Control*, 2nd Edition, John Wiley & Sons, New York.

Wood, K. and Salmeron, J. (2006). *Progress Report on DOE Research Project DE-AI02-05ER25607:Reducing the Vulnerability of Electric Power Grids to Terrorist Attacks*, Naval Postgraduate School, Monterey, California

INITIAL DISTRIBUTION LIST

1. Defense Technical Information Center
   Ft. Belvoir, Virginia

2. Dudley Knox Library
   Naval Postgraduate School
   Monterey, California

3. Professor Javier Salmeron
   Department of Operations Research
   Monterey, California

4. Professor R. Kevin Wood
   Department of Operations Research
   Monterey, California

5. Professor Ross Baldick
   Department of Electrical Engineering
   University of Texas at Austin
   Austin, Texas

6. Frederick Heller
   J-64
   Dahlgren, Virginia

7. LT Robert W. Rose, USN
   United States Naval Submarine School
   Groton, Connecticut