NPS-CRC-03-001

NAVAL
POSTGRADUATE
SCHOOL

MONTEREY, CALIFORNIA

Plasma Antennas: Survey of Techniques and the Current State of the Art

by

D. C. Jenn

September 29, 2003

Approved for public release; distribution is unlimited.

Prepared for: SPAWAR PMW 189
San Diego, CA

REPORT DOCUMENTATION PAGE	Form Approved OMB No. 0704-0188

Public reporting burden for this collection of information is estimated to average 1 hour per response, including the time for reviewing instruction, searching existing data sources, gathering and maintaining the data needed, and completing and reviewing the collection of information. Send comments regarding this burden estimate or any other aspect of this collection of information, including suggestions for reducing this burden, to Washington headquarters Services, Directorate for Information Operations and Reports, 1215 Jefferson Davis Highway, Suite 1204, Arlington, VA 22202-4302, and to the Office of Management and Budget, Paperwork Reduction Project (0704-0188) Washington DC 20503.

1. AGENCY USE ONLY *(Leave blank)*	2. REPORT DATE	3. REPORT TYPE AND DATES COVERED
	September 29, 2003	Technical Report (July 2003 to September 2003)

4. TITLE AND SUBTITLE:	5. FUNDING NUMBERS
Plasma Antennas: Survey of Techniques and Current State of the Art	
6. AUTHOR(S) David C. Jenn	
7. PERFORMING ORGANIZATION NAME(S) AND ADDRESS(ES) Naval Postgraduate School Monterey, CA 93943-5000	**8. PERFORMING ORGANIZATION REPORT NUMBER** NPS-CRC-03-001
9. SPONSORING / MONITORING AGENCY NAME(S) AND ADDRESS(ES) SPAWAR PMW 189	**10. SPONSORING / MONITORING AGENCY REPORT NUMBER**

11. SUPPLEMENTARY NOTES The views expressed in this thesis are those of the author and do not reflect the official policy or position of the Department of Defense or the U.S. Government.

12a. DISTRIBUTION / AVAILABILITY STATEMENT	12b. DISTRIBUTION CODE
Approved for public release, distribution unlimited	A

13. ABSTRACT

Plasma antennas refer to a wide variety of antenna concepts that incorporate some use of an ionized medium. This study summarizes the basic theory behind the operation of plasma antennas based on a survey of patents and technical publications. Methods of exciting and confining plasmas are discussed, and the current state of the art in plasma technology is examined.

14. SUBJECT TERMS	15. NUMBER OF PAGES
plasmas, plasma antennas	32
	16. PRICE CODE

17. SECURITY CLASSIFICATION OF REPORT	18. SECURITY CLASSIFICATION OF THIS PAGE	19. SECURITY CLASSIFICATION OF ABSTRACT	20. LIMITATION OF ABSTRACT
Unclassified	Unclassified	Unclassified	UL

NSN 7540-01-280-5500

Standard Form 298 (Rev. 2-89)
Prescribed by ANSI Std. 239-18

NAVAL POSTGRADUATE SCHOOL
Monterey, California

Rear Admiral D. R. Ellison
Superintendent

R. Elster
Provost

This report was sponsored and funded by SPAWAR PMW 189.

Approved for public release; distribution unlimited

This report was prepared by:

_____

DAVID C. JENN
Professor
Department of Electrical and
Computer Engineering

Reviewed by:

_____

HERSCHEL LOOMIS
Chairman
Cryptologic Research Center

Released by:

_____

LEONARD FERRARI
Associate Provost and
Dean of Research

TABLE OF CONTENTS

1.0 Introduction 1

2.0 Fundamental Plasma Theory 2

3.0 Plasma Generation and Containment 7

4.0 Antenna and Transmission Line Applications 10

- 4.1 Plasma Mirrors (Reflectors) and Lenses 10
- 4.2 Linear and Loop Antennas With Plasma Enclosures 13
  - 4.2.1 Ionization Using Electrodes 13
  - 4.2.2 Ionization Using an Electromagnetic Field 15
- 4.3 Linear Antennas and Transmission Lines by Ionizing the Atmosphere 16
- 4.4 Plasma Radiation 17

5.0 Microwave Devices 19

- 5.1 Filters and Phase Shifters 19
- 5.2 Microwave Tubes 20

6.0 Summary 20

7.0 References and Bibliography 21

- 7.1 References 21
- 7.2 Bibliography 24
  - 7.2.1 Miscellaneous Journal Papers 24
  - 7.2.2 Additional Patents 24

Initial Distribution List 27

(THIS PAGE INTENTIONALLY LEFT BLANK)

1.0 Introduction

The term plasma antenna has been applied to a wide variety of antenna concepts that incorporate some use of an ionized medium. In the vast majority of approaches, the plasma, or ionized volume, simply replaces a solid conductor. A highly ionized plasma is essentially a good conductor, and therefore plasma filaments can serve as transmission line elements for guiding waves, or antenna surfaces for radiation. The concept is not new. A patent entitled "Aerial Conductor for Wireless Signaling and Other Purposes" was awarded to J. Hettinger in 1919 (Figure 1).

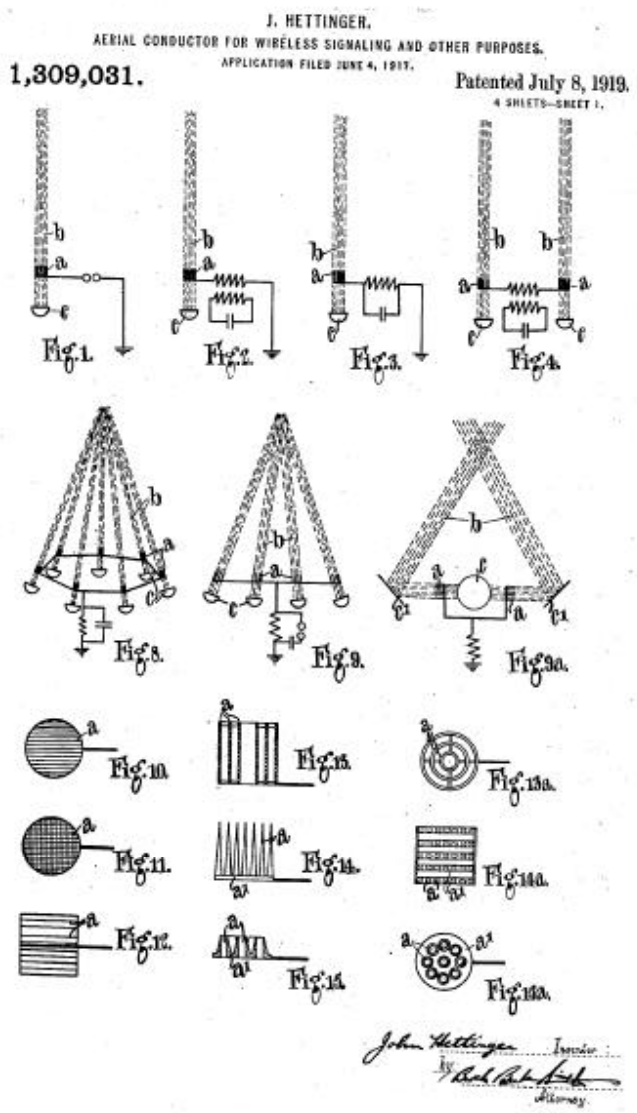

Figure 1: Diagram from J. Hettinger's 1919 patent [From 1].

The advantages of such an approach are numerous. For example, the length of an ionized filament can be changed rapidly, thereby "re-tuning" the antenna to a new frequency[1]. The antenna can be "turned off" to make it electrically invisible for the purpose of reducing its scattering signature and eliminating its coupling and interference with other nearby antennas. On the other hand, the use of plasma adds complexity to the antenna design. Equipment for establishing and maintaining the ionization must be provided. There is a glow to the plasma that increases its visible signature, and plasma decay generates noise.

The ionized volume can take a variety of forms. It can be established in air at atmospheric pressure by using lasers, high power microwave beams, or ultraviolet rays. A plasma might also be generated from a gas filled tube containing a noble gas like neon or argon. Methods that use a tube require less energy to excite and maintain the plasma state, because the gas is pure and the presence of the tube prevents dissipation. The use of a tube requires that it be protected from the environment, which increases the antenna weight and volume, and makes the antenna less durable.

This report describes the basic underlying plasma theory, examines methods of exciting and confining plasmas, and summarizes antenna concepts that incorporate plasmas.

2.0 Fundamental Plasma Theory

A plasma can be generated from neutral molecules that are separated into negative electrons and positive ions by an ionization process (e.g., laser heating or spark discharge). The positive ions and neutral particles are much heavier than the electrons, and therefore the electrons can be considered as moving through a continuous stationary fluid of ions and neutrals with some viscous friction. Furthermore, the propagation characteristics of electromagnetic (EM) waves in a uniform ionized medium can be inferred from the equation of motion of a single "typical" electron. Such a medium is called a "cold plasma." This model would be rigorous if the ionized medium was comprised entirely of electrons that do not interact with the background particles (neutrals and ions) and posses thermal speeds that are negligible with respect to the phase velocity of the EM wave.

[1] In recent years, antennas with the ability to change their radiation characteristics by modifying their physical or electrical configuration have been called "re-configurable antennas."

In the absence of a magnetic field, the important parameters for a cold plasma are the electron density N_e electrons/m^3 and the collision frequency n /m^3. The complex relative dielectric constant of the plasma is given by [2-5]

$$e_r = e_r' - je_r'' = n^2 = 1 - \frac{X}{(1 - jZ)} = 1 - \frac{w_p^2}{w(w - jn)} \tag{1}$$

where $n = \sqrt{e_r}$ is the index of refraction, $w_p = \sqrt{\frac{N_e e^2}{m e_o}}$ is the plasma frequency, $X = \left(\frac{w_p}{w}\right)^2$, $Z = \frac{n}{w}$, and

$w = 2p\ f$ radians/sec, angular frequency

$m = 9.0 \times 10^{-31}$ kg, electron mass

$e = 1.59 \times 10^{-19}$ C, electron charge

$e_o = 8.85 \times 10^{-12}$ F/m, permittivity of free space

Assuming a time harmonic wave with an e^{jwt} time dependence, a x-polarized electromagnetic plane wave propagating in the +z direction has the form

$$\vec{E}(z) = \hat{x} E_o e^{-g z}$$

where g is the conventionally defined propagation constant. The real and imaginary parts of the propagation constant are the attenuation and phase constants, respectively,

$$g \equiv a + jb = jk_o \sqrt{m_r e_r} \tag{2}$$

where $k_o = w\sqrt{m_o e_o}$, $m_o = 4p \times 10^{-12}$ H/m is the permeability of free space, and for the plasmas considered here $m_r = 1$.

For the special case of negligible collisions, $n \approx 0$, the corresponding propagation constant is

$$g = jk_o\sqrt{1-\frac{w_p^2}{w^2}} = jk_o\sqrt{1-X} \tag{3}$$

There are three special cases of interest:

1. $w > w_p$: g is imaginary and e^{-jbz} is a propagating wave
2. $w < w_p$: g is real and e^{-az} is an evanescent wave
3. $w = w_p$: $g = 0$ and this value of w is called the critical frequency, w_c which defines the boundary between propagation and attenuation of the EM wave.

The intrinsic impedance of the plasma medium is

$$h = \sqrt{\frac{m_o}{e_o(e' - je'')}} \tag{4}$$

Figure 2 shows the magnitude of the reflection coefficient at an infinite plane boundary between plasma and free space, which is given by the formula

$$|\Gamma| = \left|\frac{h - h_o}{h + h_o}\right| \tag{5}$$

The impedance of free space is $h_o = 377$ ohms. From the figure it is evident that at frequencies below the plasma frequency, the plasma is a good reflector.

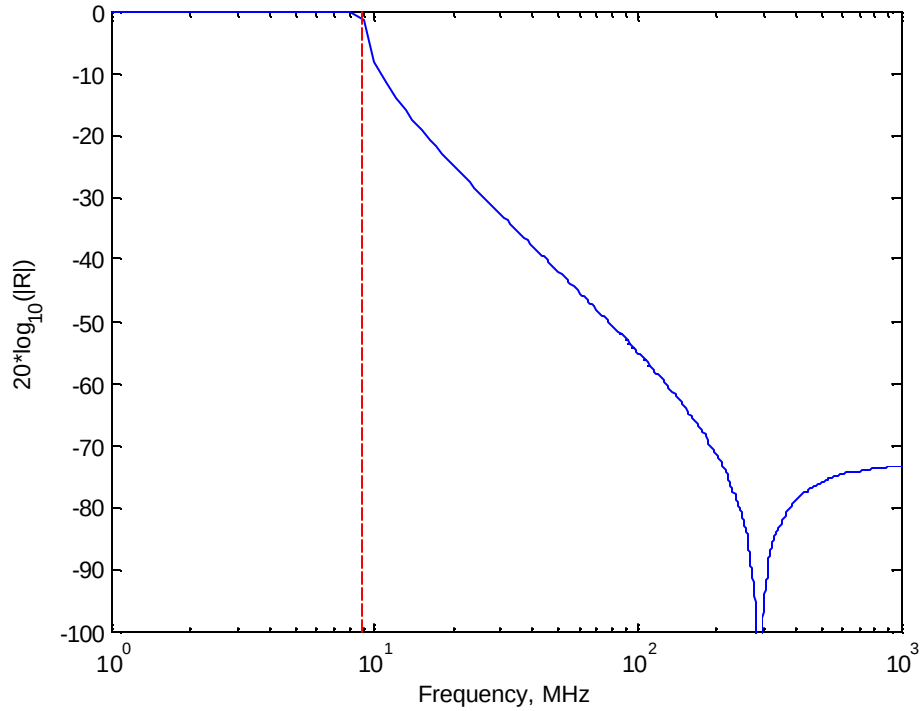

Figure 2: Reflection coefficient for a plane wave normally incident on a sharp plasma/air boundary ($N_e = 1\times10^{-12}$ /m^3, $n = 0$, dashed line is the plasma frequency, $f_p = 56.4$ MHz).

EM waves below the plasma frequency ($w < w_p$) are attenuated at a rate determined by the attenuation constant

$$|E(z)| \sim e^{-az} = \exp\left(-zk_o\sqrt{X-1}\right). \tag{6}$$

The loss in decibels per meter (dB/m) is

$$20\log_{10}\left\{\exp\left(-k_o\sqrt{X-1}\right)\right\}. \tag{7}$$

Loss is plotted in Figure 3 for several electron densities. This shows that plasma can be a good absorber once the EM wave enters the plasma medium, a feature that has been exploited in the design of plasma radar absorbing material (RAM) for stealth applications [6].

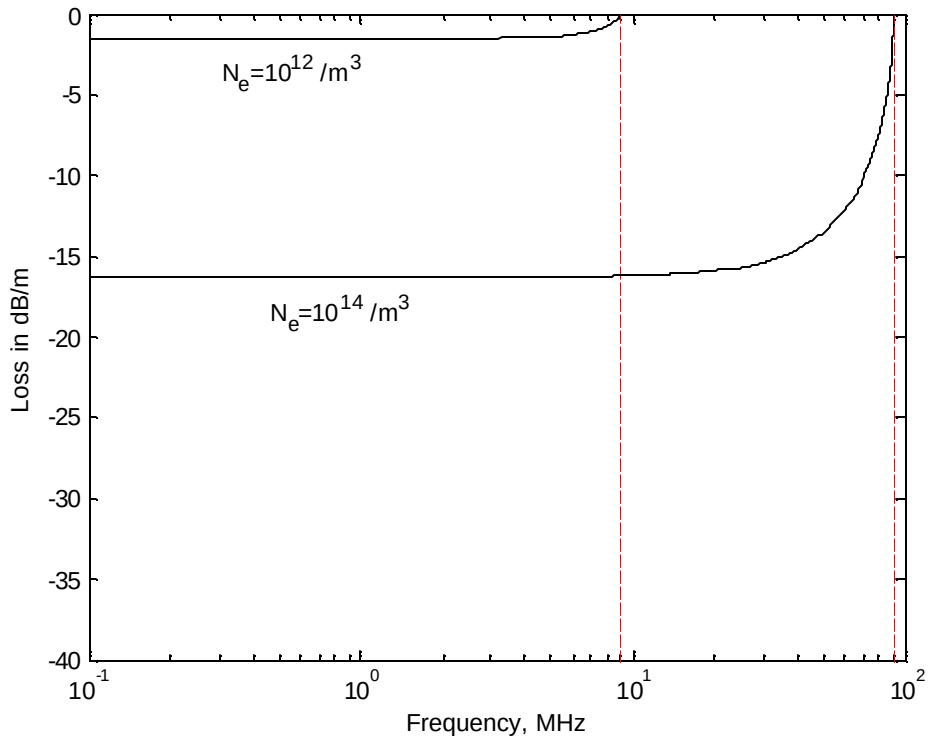

Figure 3: Loss in dB/m below the plasma frequency for several electron densities ($n = 0$).

For a neutral plasma the positive and negative charges are uniformly distributed, so that on a macroscopic scale it is electrically neutral. Plasma oscillations (or space-charge oscillations) can arise when a disturbance causes a displacement of the charges, which sets up an electric field that acts to restore them to their equilibrium positions. However, inertia carries the charges back past their neutral positions and an opposite electric field is set up. In the absence of collisions (damping) the back and forth plasma oscillations continue indefinitely.

Plasma oscillations generally do not propagate in a cold plasma unless it (1) has a drift velocity, or (2) is finite and has normal modes that arise from boundary conditions. An example of the second case is a plasma column having a sharp boundary with a vacuum or dielectric. In addition to modifying the EM wave, a longitudinal wave arises, analogous to a sound wave in non-ionized gas. These waves are variously referred to as plasma, electrostatic, space-charge, or electro-acoustical waves.

In a “warm plasma” the electron thermal velocity cannot be ignored, but non-relativistic mechanics still apply. The spatial variations (gradients) in temperature and density over a

wavelength drive the particle currents, along with the electric field of the EM wave passing through. Generally, for antenna applications, a cold plasma can be assumed.

When a magnetic field or density gradient is present, space-charge waves may couple to EM waves. Electrons with thermal speeds close to the phase velocity of the EM wave can exchange energy with the wave by the processes of Landau damping and Cerenkov radiation. These processes are exploited in some commonly used devices such as linear accelerators and traveling-wave tubes.

3.0 Plasma Generation and Containment

For antenna applications the plasma must be maintained in precise spatial distributions, such as filaments, columns, or sheets. The plasma volume can be contained in an enclosure (tube) or suspended in free space. Compositions that may be used to form plasma in a tube include gases of neon, xenon, argon, krypton, hydrogen, helium, and mercury vapor. Energizing the plasma can be accomplished with electrodes, fiber optics, microwave signals, lasers, RF heating, or electromagnetic couplers. The tube confines the gas and prevents diffusion. The radiation pattern is controlled by parameters such as plasma density, tube shape, and current distribution. Some examples are shown in Figure 4.

Figure 4: Examples of a plasma loop and reflector antenna using tubes [From 7].

The degree of ionization of a gas is given as a percentage

$$\frac{N_e}{N_e + N_o} \times 100$$

where N_o is the density of neutral molecules. For example, a standard fluorescent tube has an ionization of about 10^{-5} with $N_o \approx 10^{16} / \mathrm{cm}^3$ and $N_e \approx 10^{11} / \mathrm{cm}^3$. The conductivity of a gas

reaches half of its maximum at about 0.1% ionization, and essentially has its maximum value at 1% ionization (i.e., the conductivity at 1% ionization is nearly the same as at 100% ionization). Strong ionization refers to values on the order of 10^{-4} and greater [5].

A conventional tube has the disadvantage of requiring two or more contacts (electrodes) for applying the ionizing potential. As an alternative, a surface wave can be used to excite the plasma from a single end. The surface space-charge wave[2] is electro-mechanical in nature. A time-harmonic axial electric field is applied a one end of the plasma column. Charges are displaced and restoring electric fields are set up in response to the applied field. The charges remain balanced in the interior of the plasma, but the electric field causes a deformation of the plasma surface that results in a surface charge layer as shown in Figure 5 [9]. The coaxial device that has been developed to ionize a plasma column based on this principle is the Surfatron, which will be discussed in more detail later.

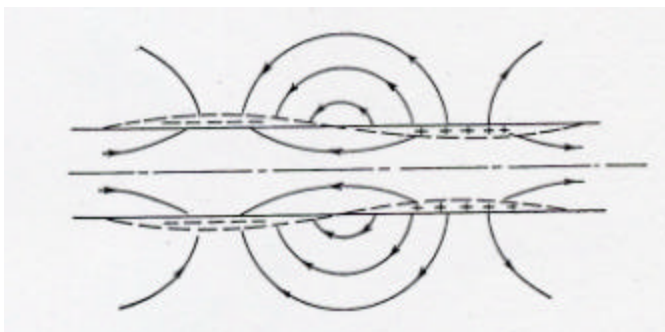

Figure 5: Distribution of the charges and fields for a surface space-charge wave [From 9].

Other types of surface wave launching methods have been developed that are more compact than the Surfatron. One of them is by means of a helicon wave [11, 12]. Helicon waves are a type of whistler wave, which are circularly polarized and require the presence of a magnetic field. For a cylinder, the magnetic field is axial and the helicon waves are modes of the bounded system. Helicon excitation is generally more complicated than surface wave excitation, but can be applied to electrically short columns, and thus results in more compact hardware at low frequencies.

[2] This wave has also been called a “surface polariton” [8].

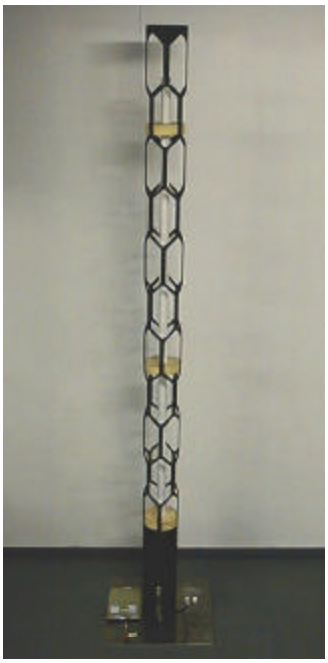

Figure 6: Linear plasma antenna excited at one end by a surface wave [From 10].

Plasma surfaces can be suspended in free space to serve as antenna elements. Ionizing a trail in the atmosphere requires special techniques [13, 14]. High ionization concentrations absorb laser energy, and at some point the ionization tail becomes opaque, thereby limiting the length. Several proposed methods use a laser beam (usually pulsed) to establish a low ionization path, and then subsequent power is applied to achieve intense ionization. Densities of $10^{19}/\mathrm{cm}^3$ have been predicted, resulting in a conductivity of a few ohms per meter.

An ionization path in air suffers beam wander due to fluctuations in temperature, density, and wind along its length. It is necessary to frequently extinguish the path and re-establish one that is straight and concentrated. This is one advantage of using a pulsed laser, another being the higher peak power that is achievable over a continuous wave (CW) laser.

Two important parameters of a plasma antenna are the time required for complete ionization, and the decay time once the excitation is removed. The latter is determined by recombination processes, the most important of which is an electron attaching itself to a positive ion to form a neutral molecule. Typical decay times are on the order of tens to hundreds of microseconds.

4.0 Antenna and Transmission Line Applications

This section describes several antenna and transmission line concepts that incorporate plasmas.

4.1 Plasma Mirrors (Reflectors) and Lenses

Figures 7 and 8 depict reflector antennas that use a plasma sheet in place of a solid conductor as the reflecting surface [15, 16]. The reflections actually occur within the plasma, not at an abrupt interface as they do for a metal reflector. For the purpose of ray tracing the reflection is considered to occur at a "critical surface" that lies somewhere inside of the plasma (similar to the virtual reflection point when tracing rays through the ionosphere). The advantages of these antennas are rapid inertia-less two-dimensional scanning, frequency selectivity by setting the plasma parameters, and potential wideband frequency performance.

In one approach, a laser beam and optics generate a reflecting surface by using a sequence of line discharges that diffuse together to form a sheet of plasma. Curvature can be obtained in one dimension (i.e., a singly curved reflector).

A high quality plasma reflector must have a critical surface that can be consistently reproduced and is stable over the transmission times of interest. When the plasma is turned off, its decay time will limit how fast the reflecting surface can be moved. Turn-on and turn-off times of 10 microseconds have been achieved [17].

Above the plasma frequency, its shape and dielectric properties can be designed to act as a lens. For example, a column with circular cross section and varying radial electron density can be used to scan a beam passing through it. This concept has been demonstrated using a helicon wave to excite the plasma. The frequency of the deflected beam was 36 GHz, the peak density approximately 7×10^{18} /m^3, and the insertion loss ~2.0 dB. The sweep time for a 30 degree scan was 200 microseconds, which was limited by the decay rate of the plasma [18].

Figure 10 shows a comparison of radiation patterns from plasma and metal reflector antennas. The plasma antenna shows lower sidelobes, especially at wide angles, due to its higher surface resistivity compared to a solid conductor [20].

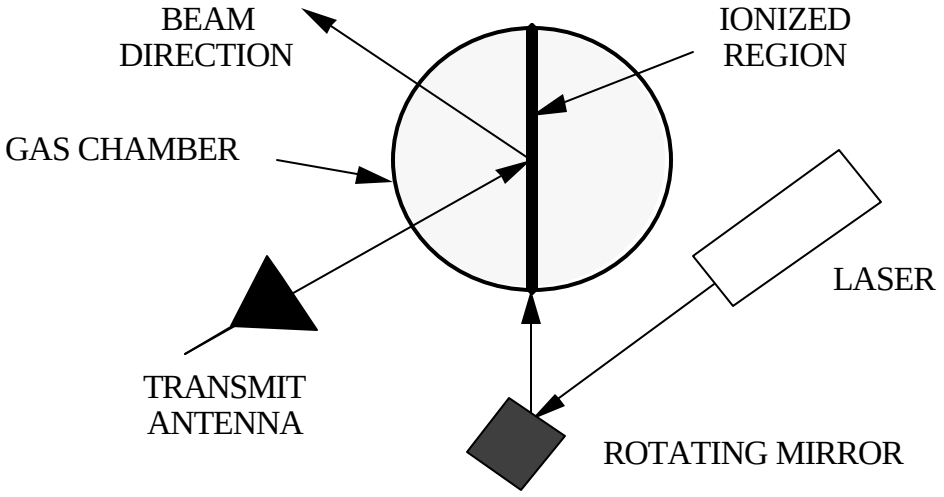

Figure 7: Plasma mirror using a laser [After 15].

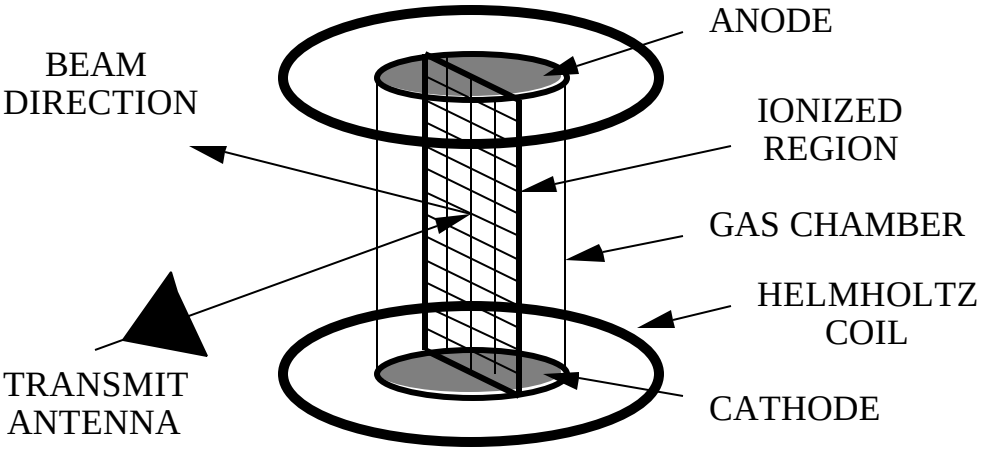

Figure 8: Plasma mirror using a chamber (tube) [After 16].

Figure 9: Plasma reflector [From 7].

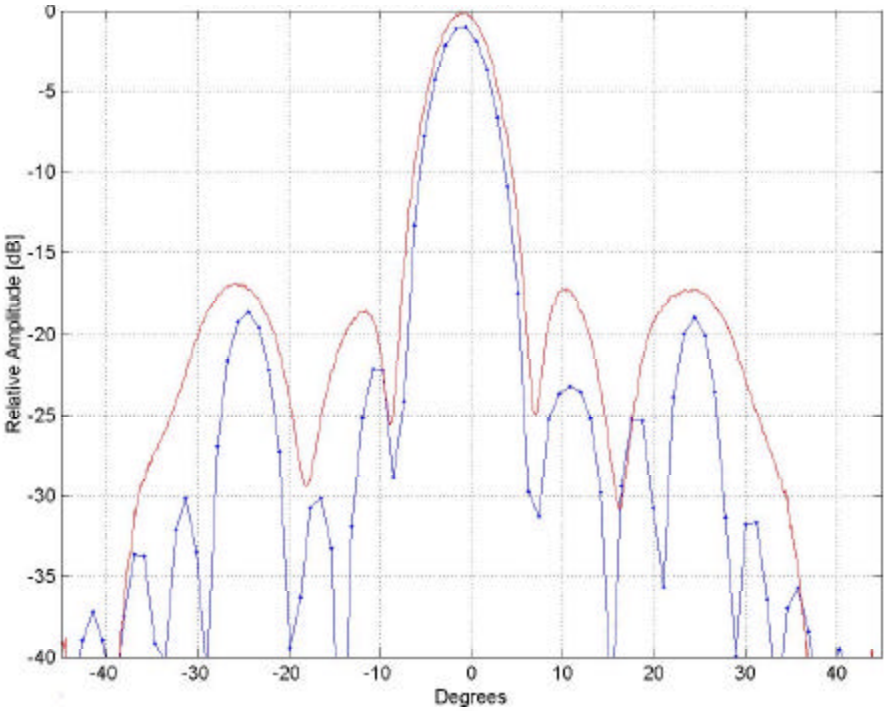

Figure 10: Comparison of radiation patterns from plasma (blue/dots) and metal (red) reflectors [From 19].

4.2 Linear and Loop Antennas With Plasma Enclosures

The first plasma antenna concepts were essentially linear antennas with conductors replaced by plasmas. The basic concept is illustrated in Figure 11 for a loop-shaped antenna [21]. The gas can be ionized using electrodes with sufficient voltage, or by using an EM field to excite the gas.

4.2.1 Ionization Using Electrodes

Figures 11 and 12 show two of the many designs that incorporate closed tubes of gas excited by voltages applied to electrodes. Figure 12 is reconfigurable in that one or more plasma paths can be excited. Different paths would be used in different frequency bands. The gas contained in a tube can be ionized by lasers or high power microwave beams, as illustrated in Figure 13.

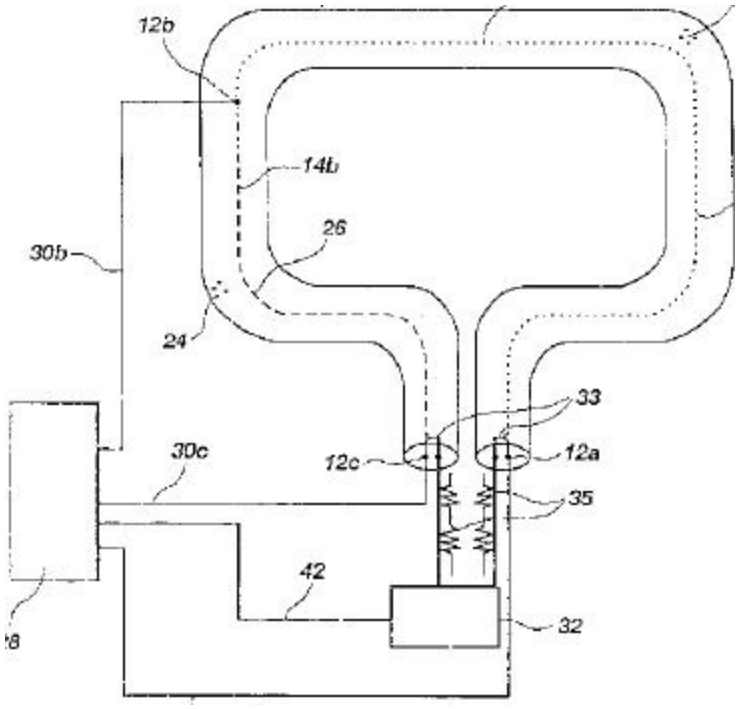

Figure 11: Loop antenna [From 21].

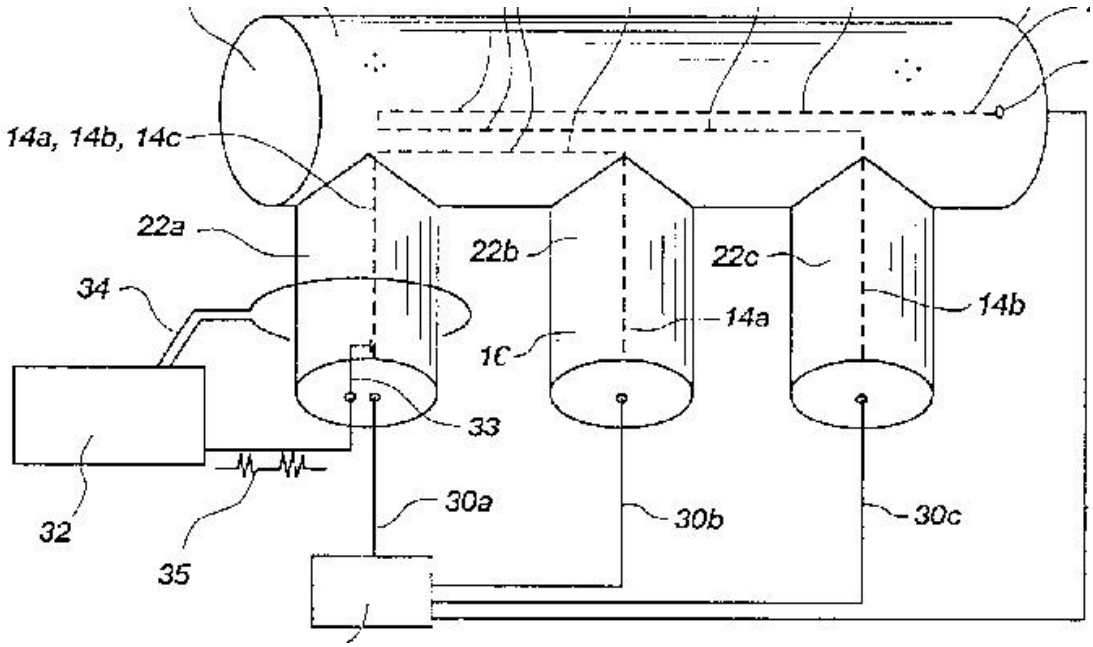

Figure 12: Antenna that can be reconfigured by selecting one of multiple plasma paths (dashed lines) [From 21].

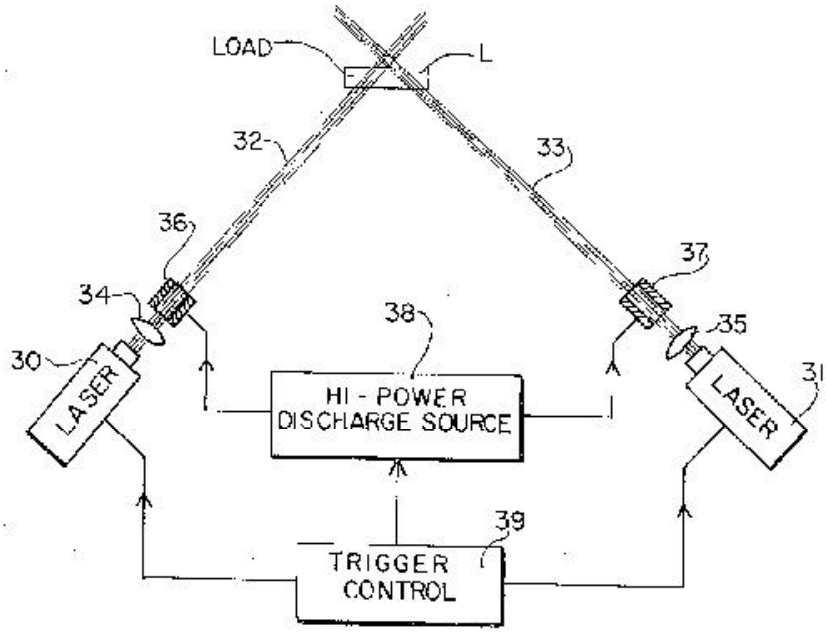

Figure 13: Ionization of a tube of gas ("LOAD") using standoff lasers [From 22].

4.2.2 Ionization Using an Electromagnetic Field

It is desirable to have only a single electrode in order to minimize the scattering and interference of the antenna feed and support structure with the radiated or received EM field. A surface wave can be used to excite a tube of gas from one end, as shown in Figure 14. The electric field in the gap excites a surface space-charge wave that propagates down the walls of the tube and eventually ionizes the gas inside. Figure 15 shows a HF monopole that incorporates surface wave excitation. The noise has been shown to be comparable to that of a metal antenna, as shown in the plots of Figure 16. The noise generated by a plasma has been analyzed in [25].

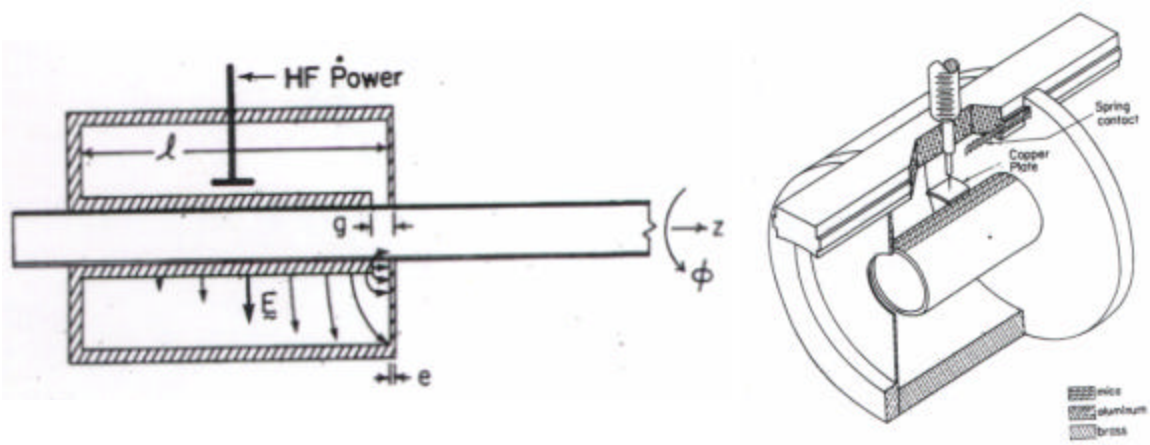

Figure 14: The Surfatron feed. Left: operational principle. Right: hardware implementation [From 23].

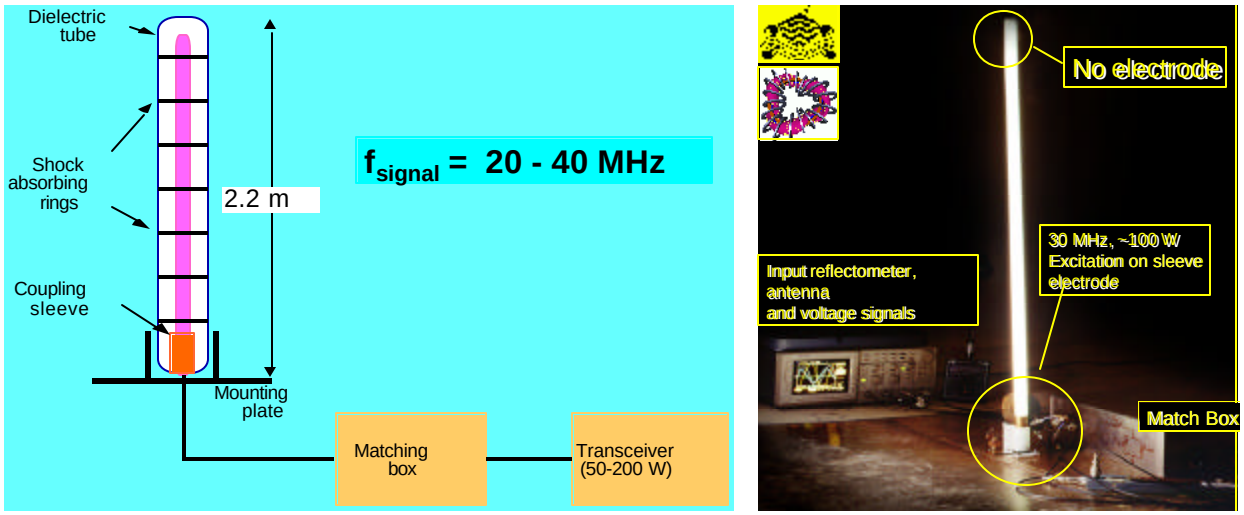

Figure 15: An operational HF monopole with surface wave excitation [From 10].

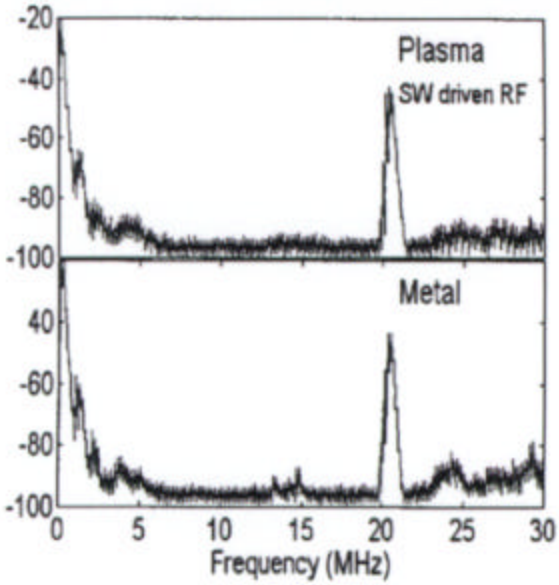

Figure 16: Comparison of the noise spectra for a surface wave driven plasma antenna and a metal antenna. The vertical scale is in dB [From 24].

4.3 Linear Antennas and Transmission Lines by Ionizing the Atmosphere

Linear plasma filaments can be generated by ionizing the atmosphere. As discussed previously, when trying to establish a highly ionized path from the source, the problem of opacity due to absorption occurs. There are two approaches that avoid this problem. One is to ionize a path using multiple lasers sequentially focussed to points in space (Figure 17). The second approach, illustrated in Figure 18, uses a laser (usually pulsed) to establish a low ionization path, and then subsequent power is applied to achieve intense ionization over the entire path.

Early patents proposed using ionized paths in the atmosphere for information transmission (i.e., as transmission lines) or discharging clouds to prevent lightning strikes. Figure 19 shows one proposed concept for discharging a cloud. Parallel paths could be used as a two-wire transmission line, or a surface wave mode could be used with a single ionized path.

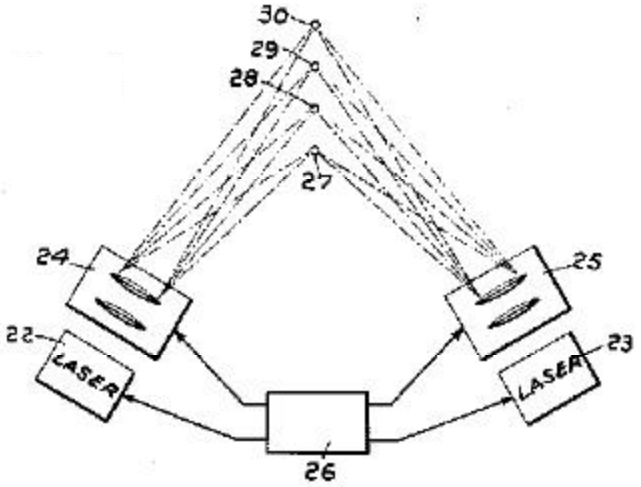

Figure 17: Ionization of a path in the atmosphere using multiple lasers sequentially focussed to points in space [From 26].

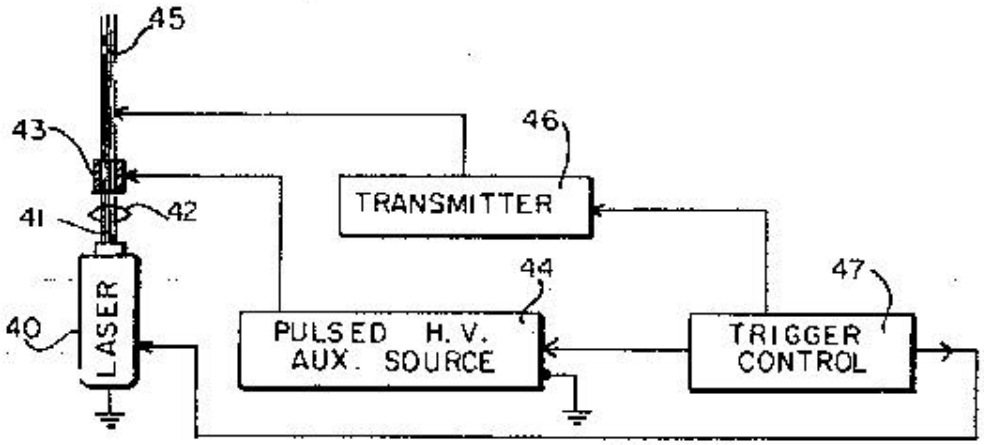

Figure 18: Multiple stage ionization of an atmospheric path using a laser [From 27].

4.4 Plasma Radiation

Several proposed antenna concepts use the plasma space-charge waves to couple to the EM wave. In Figure 20(a) blocks 15 and 20 represent oppositely directed lasers that are fired alternately. Each time the laser is fired, a pulse train is transmitted. The resonant frequency of the plasma in the tube is the transmit frequency. As depicted in Figure 20(b), the oppositely directed photon beams produce an alternating electric current in the plasma that radiates.

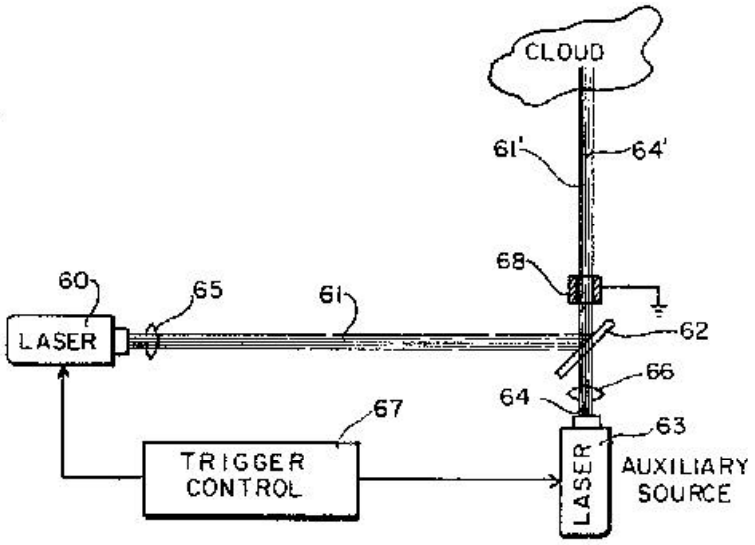

Figure 19: Method of discharging a cloud using a conductive path from a laser [From 27].

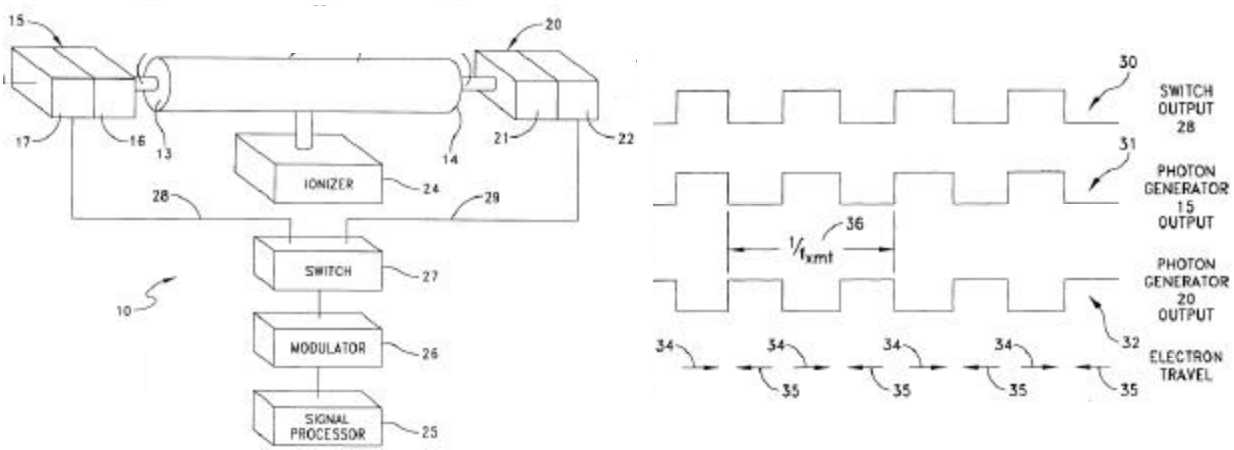

(a) (b)

Figure 20: Plasma antenna with currents generated by opposed photon beams. (a) System block diagram, and (b) alternating current vectors due to the interaction of the oppositely directed laser beams. [From 28].

Figure 21 shows a plasma antenna with multiple tubes. Various possible tube configurations and combinations of external magnetic fields, temperature gradients, and electric potentials can be used to change the shape and density of the plasma, allowing it to radiate with the desired gain and radiation pattern [29].

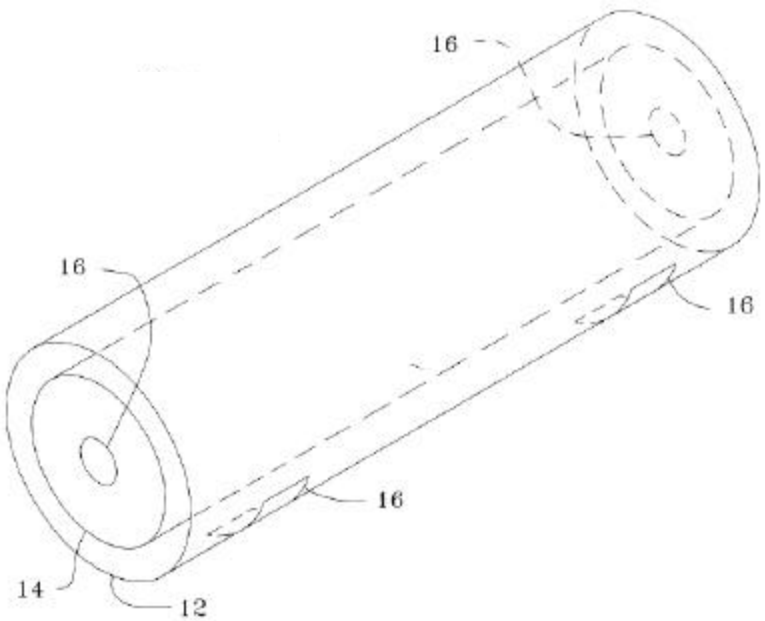

Figure 21: Multiple tube plasma antenna. Points 16 are electrodes; 14 and 12 are tube walls [From 29].

5.0 Microwave Devices

5.1 Filters and Phase Shifters

One of the first proposed applications for plasmas was a microwave band pass filter [30]. Figure 22(a) shows one possible technique, where the plasma column is either transparent, and the input signal is dissipated in the load, or reflective, allowing the input signal to return to the circulator and exit the device. Therefore, by changing the plasma parameters, and hence the plasma frequency, the pass band of the filter can be modified.

A second design is shown in Figure 22(b). A plasma operating near resonance generates azimuthal and radial components parallel to the probe. Away from resonance there are no field components parallel to the pickup probe.

Variants of these two circuits can also serve as phase shifters. For the method in Figure 22(a) multiple plasma columns could be inserted in one arm so that reflection from, or transmission through, each plasma column is possible. Variable time delay can be obtained by switching in different numbers of segments between the plasma columns.

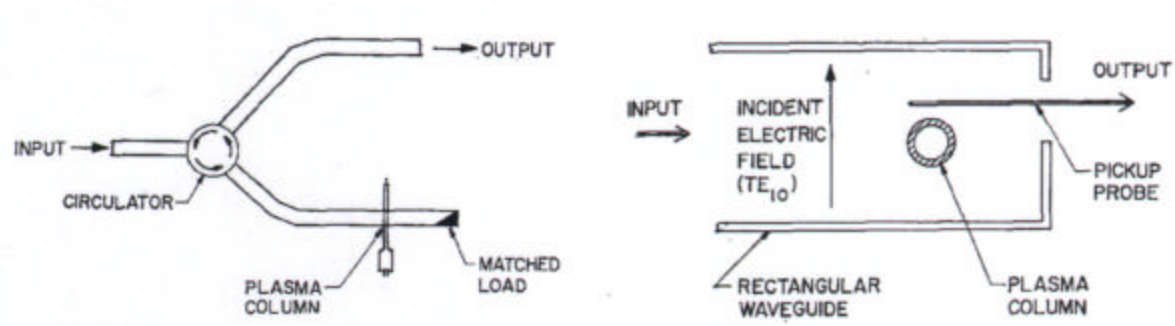

(a) (b)

Figure 22: Two bandpass filter techniques using plasmas [From 30].

Plasma switches have been used extensively for duplexing in radar, i.e., to switch out high power transmitters during receive. They are configured similar to Figure 21(a).

5.2 Microwave Tubes

The presence of a controlled amount of plasma in traveling-wave tubes and backward-wave oscillators can lead to improvement in their operating characteristics above those of evacuated devices. Specifically, the bandwidth and power handling capability can be increased [31].

6.0 Summary

The operational principles of plasma antennas have been known for decades. Table 1 is partial listing of some potential advantages and disadvantages of plasma antennas. As evident from previous sections, there is a wide range of plasma antenna concepts, and not all approaches have every advantage or disadvantage listed in the table.

The continuing advances in lasers, tubes, solid state electronics, and signal processing capabilities, have made many of the simpler plasma concepts realizable. There are many patents dealing with the subject; many of them are included in this report as references or in the bibliography. Only a small number of them have been demonstrated in hardware and most only under ideal laboratory conditions. Each design generation represents an improvement in performance, reduction in size and weight, and increase in efficiency. The performance of the

HF communications antenna described in reference [10] is comparable to conventional metal antennas.

In the distant future, plasma-type antennas are possibly the ultimate answer in the search for the "ideal" antenna, especially for platforms comprised of non-conducting composite materials. Depending on the antenna system's function, a plasma antenna of any desired size, shape, and operational frequency band would be excited at the optimal location on the platform. When the system is not in use the antenna simply disappears, until next required by the system.

Table 1: A list of some important plasma antenna attributes and their advantages and disadvantages.

Property	Advantages	Disadvantages/Limitations
"Turn-on/turn-off"	• Reduced RCS • Reduced interference and ringing	• Ionization and decay times limit scanning
Re-configurable	• Change shape to control pattern and bandwidth • Change plasma parameters	• Plasma volumes must be stable and repeatable
Plasma generator (Ionizer)	• Glow discharge increases visible signature * • Good RF coupling for electrically small antennas • Frequency selectivity	• Ionizer adds weight and volume • Ionizer increases power consumption
Confined plasma (tubes)	• Stable and repeatable • Efficient	• Not durable or flexible
Atmospheric path	• Flexibility in length and direction of path	• Higher ionization energy than for a tube

*It may be possible to reduce the visible signature by enclosing the plasma in an opaque structure.

7.0 References and Bibliography

7.1 References

1. J. Hettinger, "Aerial Conductor for Wireless Signaling and Other Purposes," Patent number 1,309,031, July 8, 1919.

2. V. L. Ginzburg, *The Propagation of Electromagnetic Waves in Plasmas*, Pergamon Press, 1970.
3. J. Drummond, *Plasma Physics*, McGraw-Hill, 1961.
4. M. Heald and C. Warton, *Plasma Diagnostics with Microwaves*, Krieger Publishing Co., 1978.
5. U. Inan and A. Inan, *Electromagnetic Waves*, Prentice-Hall, 2000.
6. D. Barrie, "LO and Behold," *Aviation Week & Space Technology*, August 11, 2003.
7. ASI Technology Corporation web page: http://www.asiplasma.com/
8. A. Boardman (editor), *Electromagnetic Surface Modes*, Wiley & Sons, 1982.
9. Trivelpiece and R. Gould, "Space Charge Waves in Cylindrical Plasma Columns," *Journal of Applied Physics*, vol. 30, no. 11, November 1959, p. 1784.
10. Australian National University web page: http://wwwrsphysse.anu.edu.au/~ggb112/index.html#
11. F. Chen, "Plasma Ionization by Helicon Waves," *Plasma Physics and Controlled Fusion*, vol. 33, no. 4, 1991, p.339.
12. H. Blevin and P. Christiansen, "Propagation of Helicon Waves in a Non-uniform Plasma," *Australian Journal of Physics*, vol. 19, 1966, p. 501.
13. J. C. Diels and W. Rudolph, *Ultrashort Laser Pulse Phenomena*, Academic Press, 1996.
14. J. Schwartz and J. C. Diels, "Analytical Solution for UV Filaments," September 2001, undetermined periodical.
15. W. Manheimer, "Plasma Reflectors for Electronic Beam Steering in Radar Systems," *IEEE Transactions on Plasma Science*, vol. 19, no. 6, December 1993, p. 1228.
16. J. Mathew, R. Meger, J. Gregor, R. Pechacek, R. Fernsler, W. Manheimer, and A. Robson, "Electronically Steerable Plasma Mirror for Radar Applications," *IEEE International Radar Conference*, June 1995, p. 742.
17. R. Meger, J. Mathew, J. Gregor, R. Pechacek, R. Fernsler, W. Manheimer, and A. Robson, "Experimental Investigations of the Formation of a Plasma Mirror for High-Frequency Microwave Beam Steering," *Phys. Plasmas*, vol. 2, no. 6, June 1995, p. 2532.
18. P. Linardakis, G. Borg and J. Harris, "A Plasma Lens for Microwave Beam Steering," downloaded from the web site http://wwwrsphysse.anu.edu.au/~ggb112/index.html#

19. D. Kintner, T. Anderson, I. Alexeff, D. Gonzalez, and H. Elovitz "Plasma Radar Briefings for Captain Archer M. Macy"
20. D. C. Jenn and W. V. T. Rusch, "Low-sidelobe Reflector Synthesis and Design Using Resistive Surfaces," *IEEE Trans. on Antennas and Prop.*, AP-39, no. 9, September 1991, p. 1372.
21. E. Norris, T. Anderson, and I. Alexeff, "Reconfigurable Plasma Antenna," Patent number 6,369,763, April 9, 2002
22. D. Tidman, "Establishing Highly Conductive Path in Gas by Thermal Guidance of Discharge," Patent number 3,775,638, November 27, 1973.
23. M. Moisan, C. Beaudry, and P. Leprince, "A Small Microwave Plasma Source for Long Column Production Without Magnetic Field," *IEEE Transactions on Plasma Science*, vol. 3, no. 2, June 1975, p. 55.
24. G. Borg, J. Harris, N. Martin, D. Thorncraft, R. Milliken, D. Miljak, B. Kwan, T. Ng, and J. Kircher, "Plasmas as Antennas: Theory, Experiment, and Applications," *Physics of Plasmas*, vol. 7, no. 5, May 2000, p. 2198.
25. T. R. Anderson, "Electromagnetic Radiation from Frequency Driven and Transient Plasmas," 2002 IEEE International Symposium on EMC, 19-23 August, vol. 1, p. 498-501.
26. L. M. Vallese and A. Shostak, "Laser Beam Antenna," Patent number 3,404,403, October 1, 1968
27. J. R. Vaill, "Laser Beam Techniques," Patent number 3,719,829, March 6, 1973.
28. T. Anderson, "Plasma Antenna With Currents Generated by Opposed Photon Beams," Patent number 6,169,520, January 2, 2001.
29. T. Anderson, "Multiple Tube Plasma Antenna, Patent number 5,963,169, October 5, 1999.
30. I Kaufman and W. Steier, "A Plasma-column Band-Pass Microwave Filter," *IRE Trans. on Microwave Theory and Techniques*, vol. 10, no.6, November 1962, p. 431.
31. G. Nusinovich, Y. Carmel, T. Antonsen, D. Goebel and J Santoru, "Recent Progress in the Development of Plasma-Filled Traveling-Wave Tubes and Backward-Wave Oscillators," *IEEE Transactions on Plasma Science*, vol. 26, no. 3, June 1998, p. 628.

7.2 Bibliography

7.2.1 Miscellaneous Journal Papers

1. L. Shenggang, R. Barker, Z. Dajun, Y. Yang, and G. Hong, "Basic Theoretical Formulations of Plasma Microwave Electronics – Part I: A Fluid Model Analysis of Electron Beam-Wave Interactions," *IEEE Transactions on Plasma Science*, vol. 28, no. 6, December 2000, p. 2135.
2. L. Shenggang, R. Barker, Z. Dajun, Y. Yang, and G. Hong, "Basic Theoretical Formulations of Plasma Microwave Electronics – Part II: Kinetic Theory of Electron Beam-Wave Interactions," *IEEE Transactions on Plasma Science*, vol. 28, no. 6, December 2000, p. 2152.
3. L. Bertrand, J-M. Gagne, R. Bosisio, and M. Moisan, "Comparison of Two Microwave Plasma Sources for HF Chemical Lasers," *IEEE Journal of Quantum Electronics*, vol. QE-14, no. 1, January 1978, p. 8.
4. G. Sauve, M. Moisan, Z. Zakrzewski, and C. Bishop, "Sustaining Long Linear Uniform Plasmas with Microwaves Using a Leaky-Wave (Troughguide) Field Applicator," *IEEE Transactions on Antennas and Propagation*, vol. 43, no. 3, March 1995, p. 248.
5. G. Nusinovich, Y. Carmel, T. Antonsen, D. Goebel, and J. Santoru, "Recent Progress in the Development of Plasma-Filled Traveling Wave Tubes and Backward-Wave Oscillators," *IEEE Transactions on Plasma Science*, vol. 26, no. 3, June 1998, p. 628.

7.2.2 Additional Patents

1. Gas Tube RF Antenna, Patent number 5,594,456, January 14, 1997, E. G. Norris, et al
2. Multiple Tube Plasma Antenna, Patent number 5,963,169, October 5, 1999, T. R. Anderson, et al
3. Rugged Gas Tube RF Cellular Antenna, Patent number 5,990,837, November 23, 1999, E. G. Norris, et al.

4. Standing Wave Plasma Antenna With Plasma Reflector, Patent number 6,046,705, April 4, 2000, T. R. Anderson, et al
5. Acoustically Driven Plasma Antenna, Patent number 6,087,992, July 11, 2000, T. R. Anderson
6. Plasma Antenna With Electro-optical Modulator, Patent number 6,087,993, July 11, 2000, T. R. Anderson, et al
7. Horizontal Plasma Antenna Using Plasma Drift Currents, Patent number 6,118,407, September 12, 2000, T. R. Anderson
8. Reconfigurable Plasma Antenna, Patent number 6,369,763, April 9, 2002, E. G. Norris, et al
9. Expandable Antenna, Patent number 6,512,496, January 28, 2003, Igor Alexeff, et al
10. Optical Demultiplexer for Optical/RF Signals, Patent number 5,450,223, September 12, 1995, H. Wagner, et al
11. Electrode Designs for High Pressure Magnetically Assisted Inductively Coupled Plasmas, Patent number 5,648,701, July 15,1997, W. Hooke, et al
12. Establishing Highly Conductive Path in Gas by Thermal Guidance of Discharge, Patent number 3,775,638, November 27, 1973, D. Tidman
13. Standing Wave Plasma Antenna With Plasma Reflector," Patent number 6,046,705, April 4, 2000.

(THIS PAGE INTENTIONALLY LEFT BLANK)

INITIAL DISTRIBUTION LIST

1. Defense Technical Information Center 2
   8725 John J. Kingman Road, Suite 0944
   Ft. Belvoir, VA 22060-6218
2. Dudley Knox Library 2 2
   Naval Postgraduate School
   411 Dyer Road
   Monterey, CA 93943-5101
3. Research Office, Code 09 1
   Naval Postgraduate School
   589 Dyer Road
   Monterey, CA 93943-5138
4. Chairman, Code EC 1
   Naval Postgraduate School
   833 Dyer Road
   Monterey, CA 93943-5121
5. D. C. Jenn, Code EC/Jn 3
   Department of Electrical and Computer Engineering
   Naval Postgraduate School
   833 Dyer Road
   Monterey, CA 93943-5121
6. Ralph Skiano 2
   SPAWAR PMW 189-1
   OT-1 Room 2552
   San Diego, CA
   Ralph.skiano@navy.mil
7. William Kordela 2
   SPAWAR PMW 189
   William.kordella@navy.mil
8. Richard Woods 1
   SPAWAR
   Richard.woods@navy.mil
9. Jeffery Lucas 1
   SPAWAR
   Jeffery.lucas@navy.mil,
   lucasj@spawar.navy.mil
10. Woody Woodward 1
    FSC, Inc.
    Woody@dc.fuentez.com