ANALYSIS OF THE TOTAL SURGICAL CARDIAC DENERVATION BY COMPUTER SIMULATION

F.Karaaslan [1], Y.Denizhan[2], A.Kayserilioglu[3], H.O.Gulcur[1]
[1]Institute of Biomedical Engineering, Bogazici University, Istanbul, Turkey
[2]Department of Electrical and Electronic Engineering, Bogazici University, Istanbul, Turkey
[3]Department of Sports Medicine of Istanbul Medical Faculty of Istanbul University, Istanbul,Turkey

***Abstract*- In this paper a new model for studying cardio-renal reflex dynamics has been introduced. Such models are important since by understanding cardio-renal dynamics well, better total artificial heart (TAH) implants may be designed and/or better drug treatment plans may be developed for helping TAH patients.**

The model introduced combines relevant parts of the two cardiovascular system models developed previously by Guyton et.al. A simulation of total surgical cardiac denervation (a condition which results in TAH implants), has resulted in an increase in the blood volume below the experimentally observed values. A correction of the kidney model including the effect of the renal sympathetic nerve activity on the set point of the tubulo-glomerular feedback mechanism is suggested.

***Keywords* – Cardiac denervation, tubulo-glomerular feedback, artificial heart**

I. INTRODUCTION

Clinical and experimental observations indicate an increase especially in blood volume in case of Total Surgical Cardiac Denervation (TSCD) which constitutes a serious obstacle for patients with Total Artificial Heart (TAH) and allows a maximum usage of five months[1].

Increases in blood volume results in renal vasodilatation, diuresis and natriuresis. These renal reactions are caused in part, by cardiac mechano-receptors located in atrial and ventricular chambers, which play a central role in sensing changes in blood volume. "Normally innervated cardiac mechano-receptors respond to hypervolemia by supressing vasopressin, renin-angiotensin-aldosteron axis, thirst and sympathetic traffic to the kidney. Ablation of cardiac afferent input should disinhibit the cardiorenal reflex, increase renal nerve activity and renal vascular resistance, reduce glomerular filtration rate and increase vasopressin, plasma renin activity, angiotensin II and aldosteron" [2][3]. It is claimed that these effects weaken the ability to excrete salt and thereby increase blood volume.

Guyton et al. have developed a detailed model of the circulatory system and simulated it on a computer [4]. We hope that studies on such models will provide better understanding of the cardio-renal reflex mechanisms which may eventually lead to the development better TAH implants. This understanding may also lead to new drug treatments to regulate the renal blood flow in TAH patients.

II. METHODOLOGY

TSCD is the ablation of the afferent and efferent heart nerves. In TAH applications the symptoms mentioned above are observed in the long term exceeding fifteen days. Since one of the goals of this study is to provide an improvement in TAH applications, long-term dynamics of the Cardiovascular System has been focused upon. For this purpose relevant parts of Guyton's two models of the long term regulation of the cardiovascular system have been combined to analyse the mechanisms under TSCD conditions[4][5]. The resulting new model is shown in Figure 1. This model has been implemented using Matlab/Simulink. This model includes following blocks and sub-systems:

Block 1 calculates the arterial pressure as a product of the cardiac output and the total peripheral resistance.

Block 2 calculates the pumping capacity of the heart as a function of the arterial pressure.

Block 3 calculates the pumping effectiveness of the heart as a product of the autonomous system response and the pumping capacity of the heart.

Block 4 calculates the autonomous system response as a function of the arterial pressure.

Block 5 calculates the baro-receptor and the chemo-receptor effects as a part of the autonomous system response as well as the baro-receptor adaptation.

Block 6 calculates the cardiac output as a function of the pumping effectiveness of the heart, where the gain is 1 for a healthy heart. For pathological heart conditions this gain has to be changed.

Block 7 calculates the right atrial pressure by using Frank Starling Law.

Block 8 calculates the venous return to the heart as a ratio of the difference between the mean filling pressure and the right atrial pressure to the venous resistance.

Block 9 calculates the blood volume as a function of the extracellular fluid volume.

Block 10 calculates the mean filling pressure as a function of the blood volume.

The input to the *Integrator* is the rate of change of the extracellular fluid volume and the output is the extracellular fluid volume.

The *Kidney* sub-system calculates the renal vascular resistance, the effects of the autonomic stimulation, and

Report Documentation Page

Report Date	Report Type	Dates Covered (from... to)
25OCT2001	N/A	-

Title and Subtitle Analysis of the Total Surgical Cardiac Denervation by Computer Simulation	**Contract Number**
	Grant Number
	Program Element Number
Author(s)	**Project Number**
	Task Number
	Work Unit Number
Performing Organization Name(s) and Address(es) Institute of Biomedical Engineering, Bogazici University, Istanbul, Turkey	**Performing Organization Report Number**
Sponsoring/Monitoring Agency Name(s) and Address(es) US Army Research, Development & Standardization Group (UK) PSC 802 Box 15 FPO AE 09499-1500	**Sponsor/Monitor's Acronym(s)**
	Sponsor/Monitor's Report Number(s)

Distribution/Availability Statement
Approved for public release, distribution unlimited

Supplementary Notes
Papers from the 23rd Annual International Conference of the IEEE Engineering in Medicine and Biology Society, October 25-28, 2001, held in Istanbul, Turkey. See also ADM001351 for entire conference on cd-rom., The original document contains color images.

Abstract

Subject Terms

Report Classification unclassified	**Classification of this page** unclassified
Classification of Abstract unclassified	**Limitation of Abstract** UU

Number of Pages
4

the blood viscosity on the renal vascular resistance. The effects of arterial pressure, renal vascular resistance and plasma colloid osmotic pressure on glomerular pressure, filtration pressure, glomerular filtration rate, and renal blood flow are also calculated. Feedback control of the afferent arteriolar resistance is calculated in response to the flow of fluid through the tubular system. The antidiuretic hormone and the aldosterone hormone on tubular reabsorption and the effects of the rate of urinary output, aldosterone secretion, and the atrial natriuretic hormone effect on sodium excretion are computed.

The control of angiotensin hormone formation as a function of the renal blood flow and the sodium concentration is calculated by the *Angiotensin* sub-system. This system also calculates the 'Angiotensin Effect' (ANGE) on other functions of the body expressed as a multiplier of its normal value.

The effects of the arterial pressure, potassium to sodium ratio, and the angiotensin on aldosteron hormon secretion rate are calculated in the *Aldosteron* sub-system. The 'Aldosteron Effect' (ALDOE), which represents the functional effect of aldosterone in the body expressed as a multiplier of its normal value is also calculated here.

The *Antidiuretic* sub-system takes care of the total effect on the antidiuretic hormone secretion of sodium concentration, of the right atrial pressure, and of the autonomic stimulation. The functional effect of the antidiuretic hormone expressed as a multiplier of its normal value is represented by ADHE in this system.

The accumulation of sodium in the extracellular fluids, the concentration of sodium, the extracellular fluid potassium, as well as the concentration and rate of potassium excretion by the kidney are calculated in the *Electrolyte* sub-system.

The *Vascularization* sub-system calculates TPR and VR by using the auto-regulation mechanism, which regulates the number and diameter of tissue vessels based on long term blood flow through peripheral vessels.

The relationships of non-linear blocks have been obtained from [5] by means of curve fitting as follows:

HPC=((-4)*(0.00001)*(AP)+(0.0078)*(AP)+0.666)

OSR=(3.079)*(exp(-0.011*(AP))

RAP=(0.2787)*(exp(0.228)*(CO))

dVas/dt=(11.312)*(exp(-0.4799*(CO))

BV=(2.1001)*ln(ECFV)-0.335)

MFP=(9.71)*(BV)-(39.497)

The fluid intake and the non-renal fluid loss are taken as 0.001597(L/min) and 0.000625(L/min), respectively.

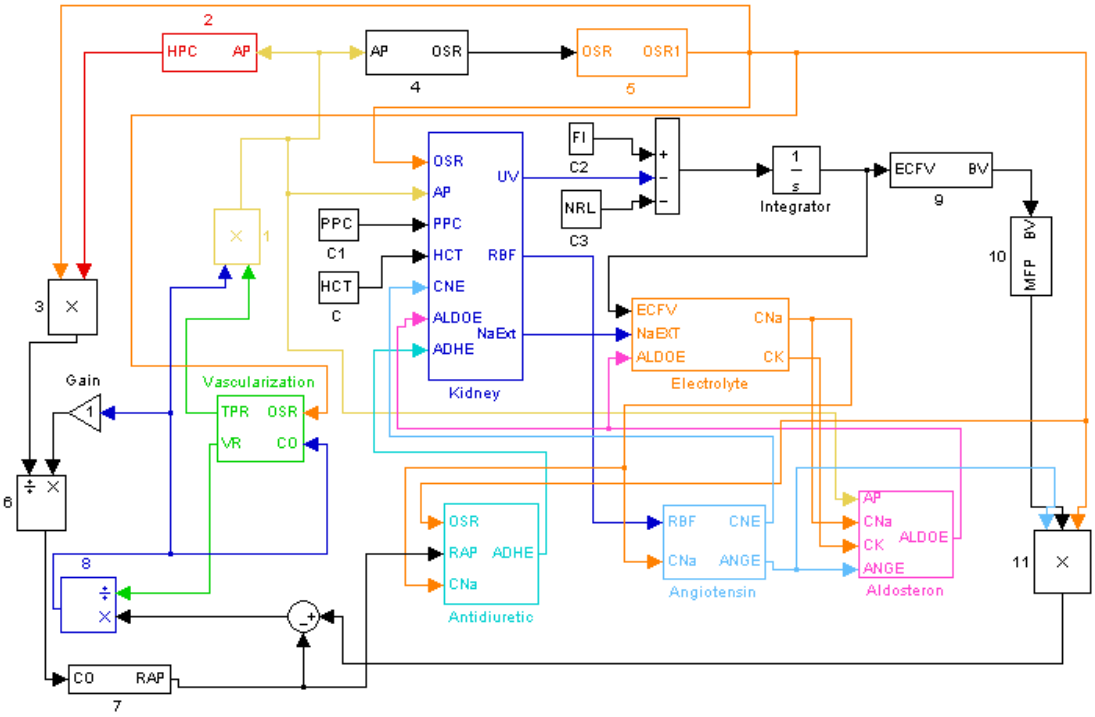

Fig. 1: Shematic Representation of Cardiovascular System Model

AP: Arterial Pressure
ANGE: Angiotensin Effect
MFP: Mean Filling Presssure
BV: Blood Volume
CK: Potassium Concent
CNE: Atrial Natriuretic Effect
VR: Venous Resistance
ECFV: ExtraCellular Fluid Volume
HCT: Heamotocrit
BA: Baroreceptor Adaptation
NRL: Non-Renal Fluid Loss
PPC: Plasma Osmotic Pressure
RBF: Renal Blood Flow
Vas: Vascularisation
ALDOE: Aldosteron Effect
ADHE: Antidiuretic Effect
BE: Baroreceptor Effect
CE: Chemoreceptor Effect
CNa: Sodium Concentration
CO: Cardiac Output
FI: Fluid Intake
HPC: Heart Pumping Capacity
NaEXT: Sodium Excretion
OSR: Autonomous System Resp.
RAP: Right Atrial Press.
TPR: Total Peripheral Resistance

III. Results

In simulations using the model presented in Fig.1, the values of all the physiological parameters are set to their normal steady-state values. After the system reaches the steady-state, the renal sympathetic nerve activity (except for those coming from the baro-receptors and chemo-receptors) is increased in order to simulate TSCD, which is known to increase the renal nerve sympathetic activity (RSNA). In this simulation the change in the antidiuretic hormone secretion under TSCD is not included.

This increase in RSNA, results in simultaneous changes in the renal blood flow (RBF), the afferent arteriolar resistance (AAR), the tubulo-glomerular feedback effect (TFE), the arterial pressure (AP) and the blood volume (BV) as shown in Fig.2. AAR, AP and BV exhibit a slightly increasing behaviour, while RBF and TFE decrease slightly. However, these changes are quite small compared to the experimentally observed ones [6].

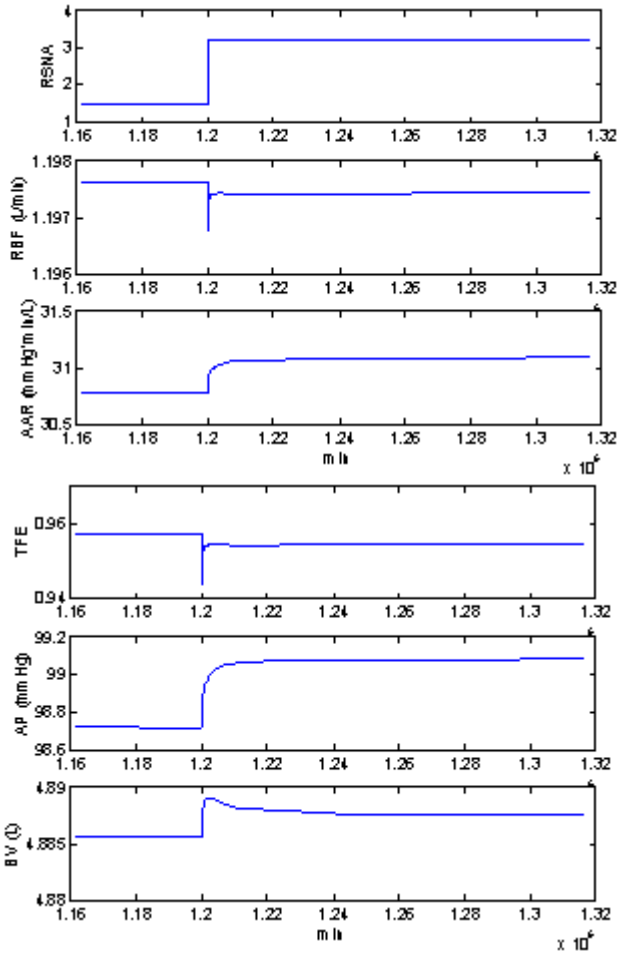

Fig 2: Figure of simultaneous changes of RSNA, RBF,AAR,AP,TFE and BV

IV. Discussion

Experimental observations show that in TSCD RSNA increases. Therefore, TSCD may be simulated by an increase in RSNA. This assumption is justified by the inverse-cubic-power dependence of the angiotensin hormone formation on the renal blood flow as used in the model. The expectation is that an increase in AAR resulting from an increase in RSNA will lead to a decrease in renal blood flow. Consequently, angiotensin hormone formation will increase resulting in a subsequent increase in aldosterone hormone and tubular reabsorption of sodium and water. These will finally result in an increase in blood volume as observed experimentally and clinically upon TSCD.

The expectations described above are indeed observed in the simulations using the model. A very slight decrease in the renal blood flow and a very small increase in the blood volume have been demonstrated in the simulations The amount of these changes are considerably below the experimental and clinical observations.

This deviation from clinical observations may be explained on the basis of tubulo-glomerular feedback effect (TFE). The glomerular filtration rate (GFR) auto-regulation is supplied primarily by the tubulo-glomerular feedback mechanism (TFE). It has been proposed that the fluid flow in the loop of Henle or some solute concentration in the loop fluid is sensed by the cells of the macula densa and that these cells send a message through the juxtra-glomerular apparatus resulting in adjustments in the arteriolar resistance (mainly the afferent arteriolar resistance) [6]. This feedback mechanism adjusts the renal blood flow and the glomerular filtration rate. In the simulations it is observed that the renal blood flow is kept almost constant by the TFE mechanism when the afferent arteriolar resistance is increased by increasing the renal nerve sympathetic activity. This deviation from the experimental observations leads us to the hypothesis that renal nerves modulate the set point of the tubulo-glomerular feedback system. A similar hypothesis has also been proposed by Richard J. Roman et al., who have developed a whole-kidney computer simulation [6].

V. Conclusion

Total Artificial Heart (TAH) implanted patients are faced with seriously altered cardiovascular states due in part to cardiac denervation, resulting in increases especially in blood volume, and other life-threatening complications. It is therefore, very important to understand well the cardio-renal reflex dynamics. This understanding may eventually lead to the development of better TAH implants and/or to new drug treatment plans for helping TAH patients through the regulation of the renal blood flow.

In this study cardio-renal reflex dynamics has been studied via a model obtained by combining the relevant parts of two detailed cardiovascular system models developed previously by Guyton et.al. In the simulation studies performed using this cardiovascular system model, it was observed that the total surgical cardiac denervation (TSCD) conditions results in an increase in the blood volume below the experimentally and clinically observed amounts. This deviation is explainable in terms of the lack of the effect of RSNA on the tubula-glomerular feedback control mechanism in the proposed model. This is also supported by the suggestions of Richard J. Roman et. al. [4]. We conclude that an addition of the renal nerve effect on the tubula-glomerular feedback control mechanism to change the set point will result in a better modelling of the kidney dynamics and consequently in more realistic simulation results for the TSCD.

At the next stage of our studies an appropriate modification of the kidney dynamics including the correction mentioned above will be investigated.

ACKNOWLEDGMENT

We thank Prof.Dr. Tamer Demiralp for his kind support and Prof.Dr. A.C.Guyton for providing the value of some physiological constants.

REFERENCES

[1] F.L.Anderson, W.C.Devries, J.F.Anderson, L.D.Joyce, 'Evaluation of Total Artificial Heart Performance in Man', Am J Cardiol, vol 54, pp. 394-398, 1984

[2] R.W.Braith, R.M.Mills, C.S.Wilcox, V.A.Convertino, G.L.Davis, M.C.Limacher, 'Fluid Homeostasis after Heart Transplantation: The Role of Cardiac Denervation', J Heart Lung Transplant, vol 15, pp. 872-80, 1996

[3] R.W.Braith, R.M.Mills, C.S.Wilcox, G.L.Davis, C.E.Wood, 'Breakdown of Blood Pressure and Body Fluid Homeostasis in Heart Transplant Recipients', J Am Coll Cardiol, vol 27, pp 375-83, 1996

[4] A.C. Guyton, T. G. Coleman and J. Granger, "Circulation: Overall Regulation," *Ann Rev. Physiol.,* vol. 34, pp. 13-46, 1972.

[5] A. C. Guyton and T. Coleman, Physical Bases of Circulatory Transport: Regulation and Exchange*, Chapter* 11W.B.Saunders Company. Philadelphia. London, 1967, pp.179-201

[6] R. J. Roman and F. R. Sias "Network Computer Analysis of the Human Kidney" *Mathematical Modeling,* Vol. 7, pp. 1045-1069,1986.