ERDC/CERL TR-02-8

Construction Engineering Research Laboratory

US Army Corps of Engineers®
Engineer Research and Development Center

Evaluation of Galvanized and Galvalume®/Paint Duplex Coating Systems for Steel Building Panels

Timothy Race, L.D. Stephenson, and Ashok Kumar

February 2002

Approved for public release; distribution is unlimited.

Foreword

This report was prepared for Headquarters, U.S. Army Corps of Engineers (HQUSACE) under project 4A162784AT41, "Military Facilities Engineering Technology"; Work Unit CF-C21, "Corrosion Control Selection System." The technical monitor was Joseph P. Hartman, CECW-EI.

This work was performed by the Materials and Structures Branch (CF-M), Facilities Division (CF), of the Construction Engineering Research Laboratory (CERL). The CERL Principal Investigator was Dr. Ashok Kumar. The report was prepared by Timothy D. Race, Dr. Kumar, and Dr. L.D. Stephenson. The technical editor was William J. Wolfe, Information Technology Laboratory — Champaign. Martin J. Savoie is Chief, CEERD-CF-M and L. Michael Golish is Chief, CEERD-CF. The associated Technical Director was Dr. Paul A. Howdyshell, CEERD-CV-ZT. The Director of CERL is Dr. Alan W. Moore.

CERL is an element of the U.S. Army Engineer Research and Development Center (ERDC), U.S. Army Corps of Engineers. The Commander and Executive Director of ERDC is COL John W. Morris III, EN and the Director of ERDC is Dr. James R. Houston.

DISCLAIMER: The contents of this report are not to be used for advertising, publication, or promotional purposes. Citation of trade names does not constitute an official endorsement or approval of the use of such commercial products. All product names and trademarks cited are the property of their respective owners. The findings of this report are not to be construed as an official Department of the Army position unless so designated by other authorized documents.
DESTROY THIS REPORT WHEN IT IS NO LONGER NEEDED. DO NOT RETURN IT TO THE ORIGINATOR.

Contents

Foreword **2**

List of Figures and Tables **4**

1 Introduction **5**

Background 5

Objectives 7

Approach 7

Mode of Technology Transfer 8

2 Literature Review **9**

3 Laboratory Testing **14**

Test Plan 14

Phase I *14*

Phase II *15*

Results 16

Phase I *16*

Phase II *17*

Discussion 19

Tape Pull-Off Test *19*

Flexibility *19*

Accelerated Corrosion Tests *19*

Electrochemical Impedance Spectroscopy 20

Evaluation of User-Applied Ceramic Coatings 24

4 Conclusions and Recommendations **26**

Conclusions 26

Recommendations 27

References **28**

Appendix: Accelerated Corrosion Resistance Testing and Acceptance Criteria for Hot Dip-Metal/Coil Coated Duplex Systems on Steel Building Panels **31**

CERL Distribution **32**

Report Documentation Page **33**

List of Figures and Tables

Figures

1 Electrochemical impedance spectroscopy testing of polymer-coated steel panels for corrosion assessment 21

2 EIS spectra for a Silicone Modified Polyester coated Galvalume® sample from Akzo-Nobel: (a) before any exposure to ASTM D 5894 (Salt Spray/UV) Test; (b) after 8 weeks exposure to ASTM D 5894 (Salt Spray/UV Test) 21

3 Log of breakpoint frequency vs. no. of weeks exposure in ASTM D 5894 test for PVF2-coated galvanized steel panes 22

4 Log of maximum impedance vs. number of weeks exposure in ASTM D5894 test for SMP-coated galvanized steel panels 23

5 Equivalent circuit for modeling EIS behavior of coated Galvalume® or galvanized steel 23

6 Comparison of (a) Envirotrol ceramic cover CC system coatings and (b) DuPont epoxy barrier coatings after 2000 hours of exposure in the ASTM D 5894 24

Tables

1 Phase I coating systems 14

2 Coil coating description 14

3 Test methods 14

4 Results of accelerated weathering tests (ASTM D 4587), 2000 hours 16

5 Results of tape adhesion tests (ASTM D 3359) 16

6 Results of accelerated corrosion tests (ASTM D 5894), 2016 hours 16

7 Results of flexibility tests 16

8 Results of accelerated corrosion tests (ASTM D 5894) 2016 hours 17

9 Results of accelerated corrosion tests (ASTM B 117) 1000 hours 18

10 Equivalent circuit parameters for SMP-coated Galvalume® samples 23

11 Results of ASTM D 5894 testing of Envirotrol ceramic-latex coatings compared to DuPont epoxy barrier coating 25

1 Introduction

Background

The Army makes wide use of metal building panels in construction at facilities around the world. Panels are used to construct entire buildings, and are also used as roofing materials. Metal building panels are popular because of their low cost and excellent long-term durability.

The Army uses premium metal building panels that are first coated with a hot-dip coating of either galvanizing or Galvalume®* for corrosion protection, and that are then coated with a durable ultraviolet resistant layer of polyvinylidene fluoride (PVF2) or silicone-modified polyester (SMP). Galvanized and Galvalumed steel are both known to have excellent corrosion resistance. The service life of bare galvanized and Galvalumed steel panels has been estimated to be more than 40 years (cf. web site for the *Sustainable Building Sourcebook*). Some literature sources suggest that Galvalume® may outperform galvanizing in certain severe exposure environments including marine and chemical-fume atmospheres.

PVF2 and SMP are generally applied in a continuous coating process known as "coil coating." PVF2 and SMP coatings are typified by their excellent gloss and color retention, resistance to chalking, and superior formability. PVF2 coatings provide the best long-term preservation of appearance of any commercially available coating material, as measured by gloss and color retention (cf. web sites for: RSI, CBS, *Sustainable Building Sourcebook*). Manufacturers typically offer 20- to 30-year warranties for PVF2 coatings. SMP coatings also have excellent gloss and color retention properties with standard warranties of 10 years. Unmodified polyester coatings are also available, but these coatings generally have a lower level of durability (5 to 7 years) than SMP and PVF2 coatings. The Army does not specify polyester topcoats.

---

* Galvalume® is an internationally recognized and registered trademark of BEIC International, Inc., and of some of its licensed producers, and a trademark of Dofasco, Inc., in Canada.

Galvanized and Galvalume® steel are specified using American Society for Testing and Materials (ASTM) standards (A 653, "Standard Specification for Steel Sheet, Zinc-Coated (Galvanized) or Zinc-Iron Alloy-Coated (Galvannealed) by the Hot-Dip Process," and A 792, "Standard Specification for Steel Sheet, 55% Aluminum-Zinc Alloy-Coated by the Hot-Dip Process," respectively). They are typically cleaned, pretreated, and primed with either a thin film epoxy or polyester coating. There are no consensus standards or specifications for PVF2 or SMP coatings. However, PVF2 coatings are generally specified by requiring a minimum polyvinylidene fluoride content and a source or brand for the resin. Typical specifications call for a minimum 70 percent by weight of either Kynar 500 (Elf Atochem North America, Inc.) or Hylar 5000 (Ausimont USA, Inc.). The resins are considered to be equivalent materials and are used interchangeably by coil coating manufacturers such as Lilly Industries, Inc. The five commercial sources of PVF2 coatings are (brand names) Nubelar, Duranar, Fluropon, Trinar, and Visulure.

Field users also report conflicting claims among vendors of coil coated galvanized and Galvalume® steel. Users rely on standard tests to resolve such discrepancies, and to determine which material (or product) is suitable for a given application. Typical test methods used to evaluate hot-dipped metal/coil coated steel include pencil hardness, flexibility (post formability), adhesion, impact resistance, abrasion resistance (falling sand), weathering (gloss and color retention), salt spray resistance (ASTM B 117, "Standard Method of Salt Spray (Fog) Testing"), and humidity resistance.

Corrosion resistance testing using ASTM B 117 has become a controversial subject in recent years with the introduction of new cyclic exposure tests that better simulate the actual conditions of exposure. ASTM D 5894-97, "Standard Practice for Cyclic Salt Fog/UV Exposure of Painted Metal (Alternating Exposures in a Fog/Dry Cabinet and a UV/Condensation Cabinet)" (January 1997) is an alternative test method that is rapidly gaining in popularity. However, many paint users and manufacturers continue to rely on ASTM B 117 to purchase or evaluate the performance of coatings. A significant amount of data indicates that ASTM B 117 may be justified as a gross screening tool. A comparison of the two methods is needed to develop improved acceptance criteria for hot-dip metal/coil coated steel building panels for Army use, and to help evaluate new coatings for steel building panels.

Objectives

The objectives of this research were:

1. To provide a detailed description of the relative merits of accelerated corrosion tests ASTM B 117 and D 5894
2. To develop improved acceptance criteria for hot-dip metal/coil coated steel building panels for Army use
3. To investigate newly emerging coatings for galvanized and Galvalume® steel, and for bare steel
4. To investigate methods of detecting early stages of coating breakdown ("incipient corrosion") using electrochemical impedance spectroscopy (EIS).

Approach

1. Coated test coupons were obtained from National Steel Company, Butler Steel Company, and Akzo-Nobel Steel Company.
2. The coupons were tested according to:
   a. ASTM B 117, "Standard Method of Salt Spray (Fog) Testing"
   b. ASTM D 522, "Standard Test Methods for Mandrel Bend Test of Attached Organic Coatings"
   c. ASTM D 3359, "Standard Test Methods for Measuring Adhesion by Tape Test (Test Method B)"
   d. ASTM D 4587, "Standard Practice for Conducting Tests on Paint and Related Coatings and Materials Using a Fluorescent UV-Condensation Light- and Water-Exposure Apparatus"
   e. ASTM D 5894, "Standard Practice for Cyclic Salt Fog/UV Exposure of Painted Metal (Alternating Exposures in a Fog/Dry Cabinet and a UV Condensation Cabinet)."
3. Test methods ASTM D5894 and ASTM B117 were compared, according to:
   a. ASTM D 714, "Test Method for Evaluating Degree of Blistering of Paints"
   b. ASTM D 1654, "Standard Test Method for Evaluation of Painted or Coated Specimens Subjected to Corrosive Environments."

4. Some samples were tested at the end of each week's ASTM D 5894 exposure by EIS, and the resulting EIS spectra were analyzed.
5. Recommended acceptance criteria (included in the Appendix to this report) were authored for hot-dip metal coil coated duplex systems on steel building panels, such as the coating systems evaluated in this study.

Mode of Technology Transfer

It is recommended that the results of this study be incorporated into the existing Unified Facilities Guide Specifications for roofing and siding metals (UFGS 07412A, 07413A, and 07416A).

2 Literature Review

The literature sources reviewed were primarily publications of the Society for Protective Coatings (SSPC—formerly Steel Structures Painting Council) and the Journal of Protective Coatings and Linings. Army Corps of Engineers and Federal Highway Administration reports and other sources were also reviewed.

Accelerated testing of coating systems for corrosion resistance is an important requirement. Accelerated corrosion tests are performed in research (to compare generic coating types), in formulation development, and in specification testing. Different coating types are often compared using accelerated tests as a quick means of assessing the relative merits of new or reformulated coatings. By conducting the accelerated corrosion tests, the end user hopes to learn more about how these materials will perform in the real world. A formulator may also perform accelerated corrosion tests when a product is reformulated or when a new coating is being developed. Typically the formulator is comparing the performance of very similar paints. For example the formulator may want to understand the effects of minor changes in pigment volume concentration. Accelerated tests are also used as acceptance tests in paint specifications. These tests are typically applied to fairly specific (in some cases, exactly defined) coatings. In all cases, accelerated tests are invaluable tools for providing timely information.

The perfect accelerated corrosion test would exactly replicate all of the stresses normally experienced by a coating in the real world, in an accelerated time frame. The perfect test would always correctly predict whether "Coating A" was better than "Coating B," and the results could be used to predict the coatings' actual service-life. The perfect test would also produce the same types of paint failures seen in the real world. Indeed, the perfect accelerated corrosion test for coatings does not exist.

ASTM B 117, first published in 1939, is the oldest and most widely used of all accelerated corrosion tests. The test was originally developed to assess the corrosion resistance of metals. Over time, it became the industry-accepted method of judging the corrosion resistance of painted steel as well.

ASTM B 117 is a static test that uses a constant elevated air temperature and continuous, pH neutral, 100-percent humidity, produced from a 5-percent sodium

chloride solution. If one compares ASTM B 117 against the stated criteria for the perfect accelerated test, it is clear that the method does not simulate the conditions and stresses encountered by most industrial maintenance coatings in the real world. The test is static, whereas real service environments are dynamic. Normal diurnal changes of temperature, humidity, and incident ultraviolet (UV) radiation as well as day-to-day and seasonal weather changes occur in actual service.

ASTM B 117 also does not simulate hygroscopic stresses caused by wetting and drying of the coating. Water absorption and desorption produces alternating compressive and tensile stresses that can weaken the film and reduce coating cohesion and adhesion, and in extreme cases, may result in irreversible deformation or brittle failure. UV radiation is known to cause oxidation and free radical-induced chain scission or degradation of the coating's polymer backbone. ASTM B 117 does not replicate this stress or mode of degradation.

Coatings that are UV sensitive may perform quite well in ASTM B 117, but may not perform adequately in the real world. Because ASTM B 117 operates at 100-percent humidity, coatings that have good water resistance, such as epoxies, tend to perform well, while coatings with relatively less water resistance, such as water-borne acrylics, tend not to perform well in this test. ASTM B 117 can produce very questionable results when disparate coating systems are compared. For example, a facility owner who relied purely on ASTM B 117 data to compare an epoxy system (which has excellent water resistance, but poor UV resistance) to a water-borne latex system (which has poor water resistance, but excellent UV resistance), may incorrectly conclude that the epoxy system is generally far superior. In fact researchers have noted this problem for many years. The results of ASTM B 117 testing can produce very different results from those seen in the real world.

Blistering is a common failure mode of coatings tested with ASTM B 117. Most coatings will not blister in normal atmospheric exposures. Blistering is typically only noted in conjunction with other failure phenomenon, or in severe high humidity, chemical, or marine exposures. Rust undercutting at intentional scribes and facial rusting also occur with ASTM B 117. These patterns of degradation also occur in the real world.

The first dynamic accelerated coating tests for paints were discussed nearly 30 years ago when Timmons published his work on the Prohesion test method. As originally developed, this method used a much more dilute salt solution that contained ammonium sulfate as well as sodium chloride. This solution was more representative of typical atmospheric exposures in terms of concentration and

chemical species than did the 5-percent sodium chloride solution used in ASTM B 117. The Prohesion test also incorporated a drying cycle that ensured that the exposed coatings would go through both wet and dry periods. Prohesion testing was both a qualitative and quantitative improvement over ASTM B 117. However, the original Prohesion test still did not account for the effects of UV degradation. It was not until the 1980s that researchers began to combine UV exposures with cyclical wet/dry salt fog exposures. This research led by Skerry and Simpson (1991) culminated in the development and acceptance of the first standardized dynamic accelerated corrosion test for coatings ASTM D 5894, *Standard Practice for Cyclic Salt Fog/UV Exposure of Painted Metal, (Alternating Exposures in a Fog/Dry Cabinet and a UV Condensation Cabinet)*, published in January 1997.

As its name implies, ASTM D 5894 is a dynamic test employing a number of different environmental stresses including UV radiation, water (fog), soluble salts, thermal and moisture gradients, and condensing humidity. Coated test specimens are first exposed for 1 week in a UV/condensing humidity cabinet cycled through 4 hours UV (UVA-340 fluorescent lamps) at 60 EC and 4-hours condensation at 50 EC. The test specimens are then exposed for 1 week in a cyclic salt fog cabinet operated with a fog/dry cycle of 1-hour fog at ambient temperature and 1-hour forced air dry-off at 35 EC. The salt fog solution contains 0.05 percent sodium chloride and 0.35 percent ammonium sulfate by weight.

Painted steel test coupons tested using ASTM D 5894 reportedly show very similar forms of degradation compared to the same coatings exposed in rural, industrial, and marine environments. Exposed test coupons generally do not exhibit facial blistering, but sometimes blister adjacent to the intentional scribe. Facial rusting and rust undercutting at the scribe are very similar in appearance to outdoor weathered coatings.

Performance correlation studies have been performed using various types of coatings applied to steel test coupons. Simpson, Ray, Skerry (1991) exposed epoxy, alkyd, and latex coating systems in marine and industrial exposure sites and compared performance to that of identical specimens exposed in cyclic corrosion/weathering (similar to ASTM D 5894), cyclic wet/dry (equal to Prohesion), and ASTM B 117. They reported the rank order performance of each coating system for each exposure. For the marine exposure, they found that latex > alkyd > epoxy. For the industrial site they found that latex ≈ alkyd > epoxy. For ASTM B 117, they found that epoxy > alkyd > latex. For cyclic wet/dry testing, they found that alkyd ≈ latex ≈ epoxy. Finally, for cyclic corrosion/weathering, they found that latex > alkyd > epoxy. The cyclic corrosion/weathering test best replicated the results of the two outdoor exposure sites. Note that ASTM B 117

rank ordered the three coatings in reverse order compared with the marine exposure site.

The SSPC compared the performance of coatings exposed at a marine site (Kure Beach) and in ASTM B 117 salt fog (Boocock 1994). At the 99-percent confidence level, they reported a correlation coefficient of 0.53 for time to rust failure for all specimens tested. The weakest correlation was for a latex acrylic system (0.308). The highest degree of correlation (0.95) was noted for a red lead oil-base coating (FS TT-P-86G, Type 2). SSPC also reported correlation coefficients for rust undercutting at the scribe. The correlation coefficient for field and ASTM B 117 exposures was -0.999. For field and cyclic salt fog (Prohesion), it was 0.749. ASTM B 117 and field exposures produced a surprisingly strong negative correlation.

Boocock reported correlation coefficients for various coatings and exposures based on composite scores derived from blistering, rusting, and undercutting (Boocock 1995). The reported correlation coefficients were 0.11 for marine vs. ASTM B 117 salt fog, 0.07 for marine vs. cyclic salt fog, and 0.70 for marine vs. cyclic salt spray-UV/condensation.

Chong also reported correlation coefficients for rust creepage at the scribe for 12 coating systems exposed in a marine environment and accelerated exposures. The reported correlation coefficients for creepage for the marine exposure versus ASTM B 117, cyclic salt fog (Prohesion), and cyclic freeze/UV-condensation/cyclic salt were 0.30, 0.81, and 0.89. Notably Chong and SSPC results are in surprisingly good agreement for field vs. cyclic salt for (Prohesion). However, there is poor agreement between their reported results for ASTM B 117 and field tests.

The correlation investigations indicate that ASTM B 117 gives poor agreement with real world exposures. In fact ASTM B 117 testing cannot reliably rank order coatings correctly. The cyclic test methods, Prohesion, ASTM D 5894, and D 5894/freezing all show improved correlation with real world exposure environments. ASTM D 5894 is the only standardized accelerated cyclic corrosion test available. ASTM has recently completed a round robin test of ASTM D 5894 involving numerous labs and field exposure sites. The results of this study are not yet available.

ASTM D 5894 states that the method has been found to be acceptable for air-dry industrial maintenance coatings on steel, but its use has not been validated for paints applied to galvanized substrates. Race (1997) reported on the use of ASTM D 5894 in an evaluation of coating systems applied to nonferrous metal surfaces including galvanizing and aluminum. This work found that coatings

applied to galvanized substrates and tested in ASTM D 5894 exhibit the same failure modes experienced in outdoor weathering exposures, namely film delamination and poor adhesion. These results suggest that ASTM D 5894 may be an appropriate test methodology for coatings applied to galvanized substrates.

ASTM D 5894 further warns against establishing pass/fail acceptance criteria using the test unless a control material is used for comparison, or the variability of the test is quantified such that statistically significant pass/fail criteria can be developed. SSPC committee C.4.2, "Performance Evaluation" is in the process of developing a consensus document that provides a statistical method of interpreting ASTM D 5894 performance data. The goal of the committee is to develop a standard method for establishing pass/fail criteria. Furthermore, several coatings specifiers including General Services Administration (GSA) and the American Association of State Highway and Transportation Officials (AASHTO) have begun to include pass/fail criterion in conjunction with ASTM D 5894 testing in purchase specifications.

3 Laboratory Testing

Test Plan

Phase I

Coated test coupons were obtained from National Steel Company. The four coating systems (Table 1) were evaluated. Table 2 lists the coil coating materials. Table 3 lists the numbers of panels evaluated and the test methods used.

Table 1. Phase I coating systems.

System Designation	Hot-Dip Metal Coating	Organic Coil Coating
G/PVF2	Galvanized[1]	PVF2
G/SMP	Galvanized[1]	SMP
GU/PVF2	Galvalume®[2]	PVF2
GU/SMP	Galvalume®[2]	SMP
[1]A 36 steel with G90 galvanized coating in accordance with ASTM A 653 [2]A 36 steel with AZ55 aluminum-zinc alloy coating in accordance with ASTM A 792		

Table 2. Coil coating description.

Hot-Dip Metal Coating	Coating Thickness	Topcoat Material
Galvanized (G90)	0.8 mils	Kynar[1]
Galvanized (G90)	0.7 mils	SMP[2]
Galvalume® (AZ55)	0.8 mils	Kynar[1]
Galvalume® (AZ55)	0.7 mils	SMP[2]
[1]Kynar 500 polyvinylidene fluoride resin coating [2]Silicone modified polyester coating		

Table 3. Test methods.

Test Method	Description	Number of Panels Per System	Duration
ASTM D 4587	Accelerated weathering (color and gloss retention)	One	2000 h
ASTM D 3359	Tape adhesion (before and after ASTM D 5894)	Seven	Three tests per panel
ASTM D 5894	Accelerated corrosion (blistering, rusting, under-cutting)	Six	2016 h
ASTM D 522	Flexibility	As needed	—

SMP and PVF2 coatings were applied to substrates conforming to ASTM A 653 and A 792. The four coating systems were evaluated using standard test methods including ASTM D 3359, ASTM D 522, ASTM D 5894, and ASTM D 4587. Coatings tested in accordance with the weathering test D 4587 were evaluated for color stability and gloss retention using ASTM methods D 2244 "Standard Test Method for Calculation of Color Differences from Instrumentally Measured Color Coordinates" and D 523 "Standard Test Method for Specular Gloss."

Panels exposed in the accelerated cyclic corrosion test ASTM D 5894 were evaluated for rusting, blistering, and undercutting at the scribe in accordance with ASTM D 1654. Each test panel was intentionally scribed in two places to expose the base steel. The final adhesion of the corrosion samples was measured in accordance with ASTM D 3359.

Phase II

The purpose of Phase II testing was to compare the types and degrees of degradation of samples exposed in ASTM B 117 versus those exposed in ASTM D 5894.

Additional coated test coupons were obtained from National Steel Company ("GS series," "GP series," "AZS series," and "AZP series"), Butler Building ("GSB series" and "GPB series"), and Akzo-Nobel ("GSA series" and "AZSA"). As in Phase I testing, the four coating systems listed in Table 1 were evaluated. However, in Phase II testing, a wide variety of materials were used from a number of different suppliers. Each test panel represents a different product with the exception of one set of duplicate panels tested in ASTM B 117 (SMP on G90).

SMP and PVF2 coatings were applied to substrates conforming to ASTM A 653 and ASTM A 792. The coating systems were evaluated using standard test methods including ASTM D 5894 and B 117. The duration of the ASTM D 5894 exposure was 2016 hours and for ASTM B 117 it was 1000 hours.

Panels exposed in the accelerated cyclic corrosion test ASTM D 5894 and B 117 were evaluated for rusting, blistering, and undercutting at the scribe in accordance with ASTM D 1654. Each test panel was intentionally scribed in two places to expose the base steel.

Results

Phase I

The results of the accelerated weathering, tape adhesion, accelerated corrosion, and flexibility tests are listed in Tables 4, 5, 6, and 7, respectively.

Table 4. Results of accelerated weathering tests (ASTM D 4587), 2000 hours.

System	Initial Gloss	Final Gloss	Gloss Retention	Color Change
G90/PVF2	30.9	29.8	96.4%	$\Delta e = 0.39$
G90/SMP	41.6	20.4	49.0%	$\Delta e = 8.05$
AZ55/PVF2	36.5	35.7	97.8%	$\Delta e = 0.70$
AZ55/SMP	46.5	10.8	23.2%	$\Delta e = 10.4$

Table 5. Results of tape adhesion tests (ASTM D 3359).

System	Before Accelerated Corrosion	After Accelerated Corrosion
G90/PVF2	5B	5B
G90/SMP	5B	5B
AZ55/PVF2	5B	5B
AZ55/SMP	5B	5B

Table 6. Results of accelerated corrosion tests (ASTM D 5894), 2016 hours.

System	Rust Rating (D 1654)	Undercutting at Scribe D1654Rating (mm)*	Facial Blistering (D 714)
G90/PVF2	9+ (0.02%)	7 (1.3 mm)	None
G90/SMP	10	6 (2.7 mm)	None
AZ55/PVF2	10	6 (2.4 mm)	Very Few #8
AZ55/SMP	10	6 (2.1 mm)	Medium #8

* Undercutting is presented as the average of the maximum undercutting measured for each of 12 scribes.

Table 7. Results of flexibility tests.

System	Percent Elongation
G90/PVF2	27%
G90/SMP	27%
AZ55/PVF2	27%
AZ55/SMP	27%

Phase II

Tables 8 and 9 list the results of ASTM D 5894 and B 117 testing respectively.

Table 8. Results of accelerated corrosion tests (ASTM D 5894) 2016 hours.

System	Rust Rating (D 1654)	Undercutting at Scribe D1654 (mm)	Facial Blistering (D 714)
G90/PVF2			
GP49	10	0.5, 0.5	None
GP40	10	1, 0.5	None
GP60	10	1, 0.5	None
GP61	10	0.5, 0.5	None
GP58	10	0.5, 0.5	None
GP36	10	0.5, 0.5	None
GP15	10	0.5, 0.5	None
GPB–4	10	0.5, 1	None
GPB–5	10	0.5, 0.5	None
GPB–6	10	0.5, 0.5	None
G90/SMP			
GS21	10	0.5, 0.5	None
GS10	10	0.2, 0.5	None
GS76	10	1, 0.5	None
GS47	10	1, 0.5	None
GS50	10	0.5, 0.5	None
GSB–4*	10	2.5, 2	None
GSB–5*	10	1, 2	None
GSB–6*	10	1, 1	None
GSA–4	10	0.5, 0.5	None
GSA–5	10	0.5, 0.5	None
GSA–6	10	0.5, 0.5	None
AZ55/PVF2			
AZP17	10	0, 0	None
AZP49	10	0, 0	None
AZP82	10	0, 0	None
AZ55/SMP			
AZS21	10	0, 0	None
AZS93	10	0, 0	None
AZS90	10	0, 0	None
AZSA–4	10	0, 0	None
AZSA–5	10	0, 0.5	None
AZSA–6	10	0, 0.5	None

* GSB Series G90 SMP test panels have severely corroded edges and red rust in the scribe.

Table 9. Results of accelerated corrosion tests (ASTM B 117) 1000 hours.

System	Rust Rating (D 1654)	Undercutting at Scribe D1654 (mm)	Facial Blistering (D 714)
G90/PVF2			
GP40	10	0, 0	None
GP60	10	0, 0	None
GP61	10	0, 0	None
GP58	10	0, 0	None
GP81	10	0, 0	None
GP15	10	0, 0	None
GP49	10	0, 0	None
GP36	10	0, 0	None
GPB–1	10	3, 4	None
GPB–2	10	3.5, 3	None
GPB–3	10	3, 3	None
G90/SMP			
GS10	10	0, 0*	Few No. 8
GS10	10	0, 0*	Few No. 8
GS76	10	0, 0	None
GS47	10	0, 0	None
GS50	10	0.5, 0	None
GS121	10	0, 0	None
GSB–1	10	3, 1	None
GSB–2	10	3, 3	None
GSB–3	10	2, 2.5	None
GSA–1	10	2, 2.5	None
GSA–2	10	2, 2	None
GSA–3	10	2, 3	None
AZ55/PVF2			
AZP17	10	0, 0	None
AZP49	10	1, 0	None
AZP82	10	0, 0	None
AZ55/SMP			
AZS21	10	0, 0	Few No. 6
AZS93	10	0, 0	None
AZS90	10	0, 0	None
AZSA–1	10	0, 0	None
AZSA–2	10	0, 0	None
AZSA–3	10	0, 0	None

* Dense No. 8 blisters at the scribe

Discussion

Accelerated weathering tests were performed using an ultraviolet condensing humidity exposure cabinet. Panels were exposed for 2000 hours in accordance with ASTM D 4587. The initial and final values of specular gloss and color were measured. The percent-retained gloss and color change (Δe) were calculated. The PVF2 topcoats displayed excellent gloss retention and color stability. The SMP topcoats had fair color stability and fair to good gloss retention. The PVF2 topcoats retained their appearance much better than the SMP topcoats.

Tape Pull-Off Test

In Phase I testing, the coating adhesion was measured using a tape pull-off test both before and after exposure in the accelerated corrosion test. SMP and PVF2 coatings had excellent adhesion to both galvanized and Galvalume® substrates. Each system received the highest possible rating (5B) both before and after exposure. There were no discernible differences in adhesion between any of the coatings tested. Although adhesion testing was not part of Phase II, several samples were noted to have less than perfect (5B) adhesion after the 1000 hour ASTM B 117 exposure. For PVF2 on G90, one sample (GP40) had a measured adhesion of 0B and a second sample (GP61) was 4B. For SMP on G90, one sample (GS10) had an adhesion of 4B.

Flexibility

All of the coatings tested had excellent flexibility. Flexibility is an important property because the finished product will be post-formed into the final shape of the product. Inflexible coatings will crack and disbond resulting in poor appearance and reduced corrosion resistance.

Accelerated Corrosion Tests

Accelerated corrosion tests were run on each coating system in accordance with ASTM D 5894. Exposed test panels were evaluated for rusting, blistering, and undercutting at the scribe in accordance with ASTM D 1654. In Phase I testing, all of the coating systems exhibited a degree of undercutting at the scribe for the ASTM D 5894 exposure. However, in Phase II testing it was primarily the galvanized panels that exhibited undercutting in ASTM D 5894. Undercutting was between the organic coating and the hot-dip metal coating.

In Phase I, the PVF2-coated galvanized substrate had less undercutting than the other systems. In Phase II the PVF2 and SMP coated Galvalume® substrates showed less undercutting than SMP and PVF2 on galvanizing.

In Phase I, the Galvalume® substrates exhibited a slight but measurable degree of facial blistering. Number 8 blisters are quite small, however, facial blistering does not usually occur on protective coatings evaluated in ASTM D 5894 and is typically interpreted as a sign of poor long-term corrosion resistance. In Phase II, none of the ASTM D 5894 specimens exhibited any blistering.

During Phase I testing, PVF2 on galvanizing was the only system that showed a significant amount of surface rusting. The degree of rusting was slightly better than a 9 rating (0.03 percent rust) with an average rust coverage on each exposed panel of about 0.02 percent. All of the other systems displayed surface rust of less than 0.01 percent. In Phase II, none of the ASTM D 5894 panels had any rust. The coatings tested in Phase II performed better than the Phase I materials for the ASTM D 5894 exposure.

In Phase II accelerated corrosion tests were also run on each coating system in accordance with ASTM B 117. Exposed test panels were evaluated for rusting, blistering, and undercutting at the scribe in accordance with ASTM D 1654. With the exception of one test specimen none of the Galvalume® panels exhibited undercutting. Several of the galvanized test panels exhibited undercutting at the scribe. All of the products tested had rust ratings of 10, or "no rusting." One panel had a single blister. A single blister may be the result of isolated contamination on the metal-coated sheet prior to topcoating. Two panels from a single lot had few #8 blisters on the panel faces and dense #8 blisters along the scribes. These specimens would meet the current criteria (UFGS 07412A, 07413A, and 07416A) for salt spray testing for a 1-mil coating.

Electrochemical Impedance Spectroscopy

Some of the factory-coated steel panels used in metal buildings/roofing were tested by EIS in the laboratory using the ASTM D 5894 to simulate accelerated corrosion via cyclic exposure to UV radiation and salt spray. The EIS data can be used to detect the onset of incipient corrosion (coating degradation).

EIS is being used to predict the long-term behavior (25 years) from short-term (3 to 4 years) field tests. In the laboratory setting, ASTM D 5894 is being used to condition the corrosion test samples to simulate field conditions to provide an indication of the sensitivity of EIS to changes in ambient conditions.

Figure 1 shows the EIS testing apparatus. EIS testing was conducted to determine the feasibility of predicting the long-term field service life based on short-term field exposure. EIS spectra were analyzed by equivalent circuit modeling, which simulates the behavior of properties of the electrochemical reaction at the coating/metal interface. Figure 2 shows the EIS spectra for an SMP-coated Galvalume® sample from Akzo-Nobel before and after salt spray/UV exposure (ASTM D 5894).

Figure 1. Electrochemical impedance spectroscopy testing of polymer-coated steel panels for corrosion assessment.

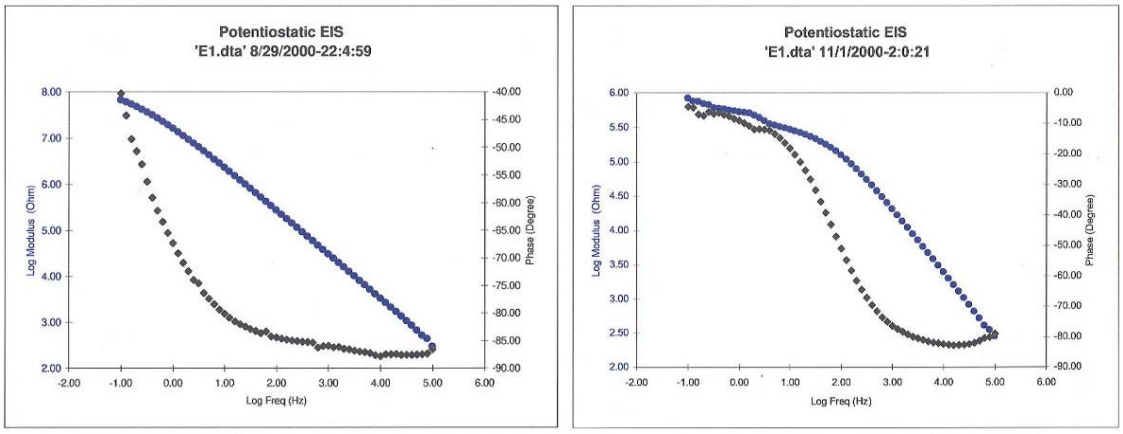

a b

Figure 2. EIS spectra for a Silicone Modified Polyester coated Galvalume® sample from Akzo-Nobel: (a) before any exposure to ASTM D 5894 (Salt Spray/UV) Test; (b) after 8 weeks exposure to ASTM D 5894 (Salt Spray/UV Test).

The relative degree of coating degradation can be determined from the shape of curve. A perfect coating generally displays purely capacitive behavior; i.e., the log (impedance) versus log (frequency) plot exhibits linear behavior with a slope of -1. The slope of a portion of this line changes from -1 to -1/2 or -1/4, as the coating degrades. The frequency at which the phase angle of complex impedance response equals 45 degrees is known as the breakpoint frequency (f_B). The f_B value is usually seen to decrease as the coating breaks down, based on the work of Hack and Scully (1991). Other parameters, such as maximum impedance (Zmax) generally decrease as the coating breaks down due to continued exposure to the combined effects of ultraviolet light and salt spray. These behaviors are readily seen in Figures 2 through 4.

The response of the coating/metal interface can be modeled with an equivalent circuit composed of the following elements: solution resistance (Rs), coating capacitance (Cc), charge transfer resistance (R_t), double layer capacitance (C_{dl}) and coating resistance (R_d), as shown in Figure 5. The equivalent circuit element values will also change as the coating breaks down. Table 10 lists typical changes in these parameters for the EIS spectra shown in Figure 2. Resistance (R_t and R_d) exhibit a notable decrease, greater than one order of magnitude, while Cdl increases more than one order of magnitude. The coating capacitance (Ccoat) usually increases as the coating soaks up some water. The more porous the coating, the more readily this phenomenon occurs.

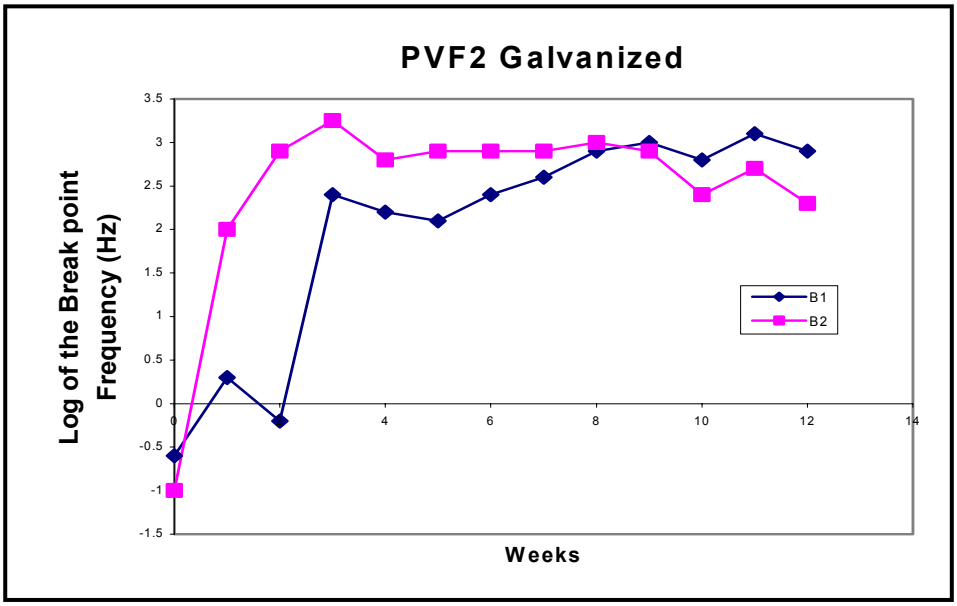

Figure 3. Log of breakpoint frequency vs. no. of weeks exposure in ASTM D 5894 test for PVF2-coated galvanized steel panes.

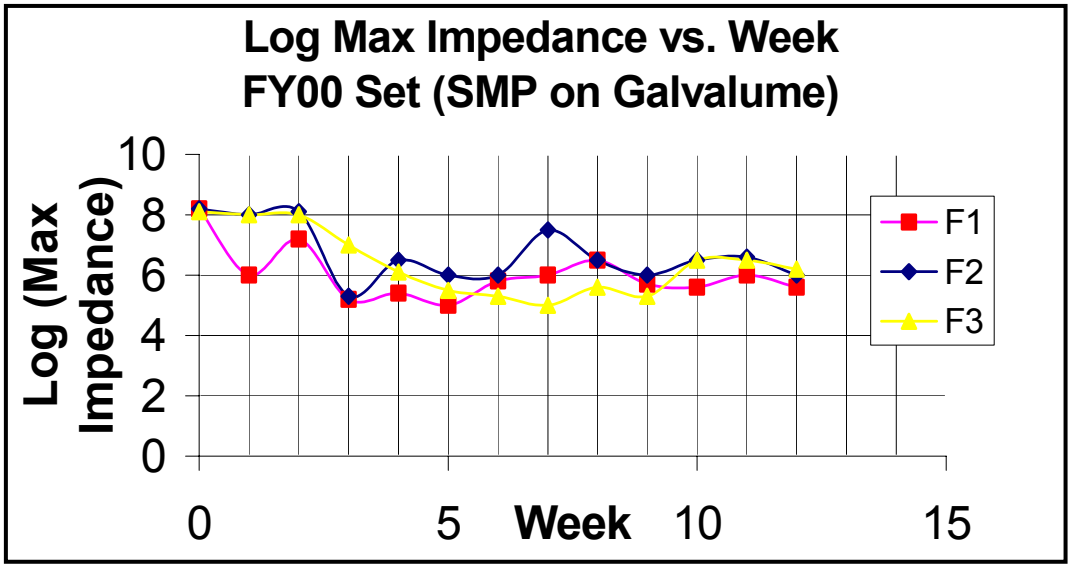

Figure 4. Log of maximum impedance vs. number of weeks exposure in ASTM D5894 test for SMP-coated galvanized steel panels.

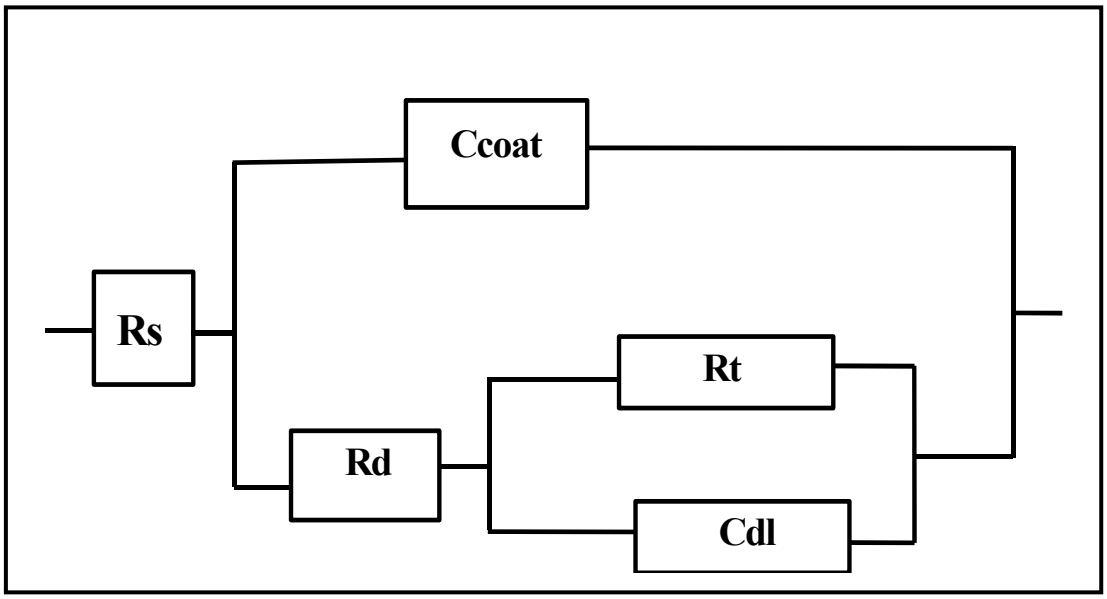

Figure 5. Equivalent circuit for modeling EIS behavior of coated Galvalume® or galvanized steel.

Table 10. Equivalent circuit parameters for SMP-coated Galvalume® samples.

Equivalent Circuit Elements	Before ASTM D5894 Exposure (cf. EIS spectra in Figure 2a)	After 8 weeks ASTM D5894 Exposure (cf. EIS spectra in Figure 2b)
Rs	27.3 Ohms	75 Ohms
Rt	69 M-Ohms	0.33 M-Ohms
Rd	8.7 M-Ohms	0.226 M-Ohms
Cdl	6409 pF	139100 pF
Ccoat	5379 pF	7408 pF

Evaluation of User-Applied Ceramic Coatings

A laboratory evaluation of the corrosion properties of the Envirotrol Ceramic Cover CC System (latex with amorphous silica flakes) using ASTM D 5894 testing was completed. The Ceramic Cover CC system is marketed as a radiant heat barrier/insulating spray-on coating, primarily used for rehab of metal roofs and buildings, and HVAC ductwork. The Envirotrol Company's product literature had indicated that this coating might also protect steel against corrosion. A commercial epoxy barrier coating from DuPont was used as a control for comparison with the Envirotrol coating. Coated steel test panels were evaluated for rusting, blistering, and undercutting in accordance with ASTM D 1654.

The barrier coating was applied to an average 10.5 mils DFT and Envirotrol to an average 19.5 mils dry film thickness. Triplicate panels were prepared for each system in accordance with SSPC standard SSPC-SP 5 and coated in accordance with the manufacturer's recommended procedures. The coatings were air-dried for 7 days, double scribed, and exposed in accordance with ASTM D 5894 for 2016 hours. At the completion of testing, each panel was rated for rusting, blistering, and undercutting at the scribe. Table 11 lists the test results. As the data show, the epoxy-barrier control coatings exhibited much better corrosion protection for the substrate than did the Envirotrol coatings. Figure 6 shows both coating systems after exposure to ASTM D 5894 testing.

Finally, newly emerging coating systems such as polyvinyl fluoride (PVF) that inhibit the ability of contaminants to adhere (and thus tend to be "self-cleaning" coatings) are also being investigated in the laboratory by ASTM D 5894 and EIS. The results of this testing will be made available later this year.

Figure 6. Comparison of (a) Envirotrol ceramic cover CC system coatings and (b) DuPont epoxy barrier coatings after 2000 hours of exposure in the ASTM D 5894.

Table 11. Results of ASTM D 5894 testing of Envirotrol ceramic-latex coatings compared to DuPont epoxy barrier coating.

Evaluation Method	Envirotrol			Control Epoxy		
	Panel 1	Panel 2	Panel 3	Panel 1	Panel 2	Panel 3
ASTM D714 Blistering	Medium No.2	Medium No.2	Medium No.2	None	None	None
ASTM D610 Rust	~50-60%	~50-60%	~50-60%	None	None	None
Undercutting – Mean Maximum	4.9 mm			1.9 mm		
Undercutting – Standard Deviation	2.6 mm			1.2 mm		
Undercutting – Mean Maximum at 95% CL	9.7 mm			4.1 mm		

4 Conclusions and Recommendations

Conclusions

1. This study explored the relative merits of accelerated corrosion testing of metal building roofing and siding panels according to ASTM D 5894 vs. ASTM B 117. Coil-coated galvanized and Galvalume® steel building panels were tested according to both methods, and the results were compared. Results indicated that ASTM D 5894 better predicts "real-world" performance of a coating system. New acceptance criteria for coated galvanized and Galvalume® steel were established based on these results.

2. The long-term appearance properties of PVF2 coated substrates as predicted by accelerated testing is excellent. SMP coatings do not retain their appearance nearly as well as PVF2 coatings. PVF2 coatings should be specified whenever preservation of appearance is the most important criteria.

3. Both SMP and PVF2 coatings have excellent flexibility at the thicknesses used and are well suited to post-forming applications such as the manufacture of metal building panels and roof sections.

4. The corrosion test results are mixed. Corrosion resistance results in ASTM D 5894 are measurably different between Phases I and II. The G90/PVF2 system in Phase I exhibited a minor degree of facial rusting. This result was not predictable and is somewhat surprising for a galvanized coating system. One possible explanation is that the continuous process of applying zinc coating left a deposit too thin to cover all of the high spots in the steel substrate. The organic primer and topcoat are applied at very low thickness and rust through at areas where steel is not coated with zinc would be expected. The test results are most probably indicative of an inadequate galvanized coating. Phase II results indicate good performance for PVF2 and SMP coatings over both substrates. PVF2 and SMP on Galvalume appear to be equivalent and somewhat better than over galvanizing as indicated by undercutting.

5. The observed facial blistering of SMP and PVF2 coatings on Galvalume substrates is also surprising. Facial blistering in ASTM D 5894 can usually be taken as a sign of poor long-term coating performance. Poor or declining adhesion ordinarily accompanies the appearance of blistering. However, this was not the case for the Galvalume test panels where adhesion was excellent both before and after accelerated corrosion tests. Again these results are difficult to interpret.

6. The EIS spectra show increasing breakpoint frequency and decreasing maximum impedance over time as exposure in the ASTM D 5894 testing continues. The equivalent circuits of the spectra indicate concomitant decreasing charge transfer resistance (R_t), decreasing diffusion resistance (R_d) and increasing double-layer capacitance (C_{dl}), indicating early stages of coating degradation before visible defects are observed.
7. Based on the overall corrosion test results, it is not possible to conclude which system has the best corrosion resistance. The actual differences in corrosion resistance are probably very small. Any minor differences noted in real world performance. as well as performance in accelerated tests, are probably due to slight variations in the coating processes. However, this does not mean that ASTM D 5894 cannot be used to screen out substandard materials and processes. In fact it is quite possible that the differences in ASTM D 5894 results in Phases I and II are the result of actual differences in the materials tested.

Recommendations

1. Accelerated corrosion test methods using ASTM D 5894, "Standard Practice for Cyclic Salt Fog/UV Exposure of Painted Metal (Alternating Exposures in a Fog/Dry Cabinet and a UV Condensation Cabinet)," and acceptance criteria in the Appendix to this report are recommended for hot-dip metal coil coated duplex systems on steel building panels, such as the coating systems evaluated in this study. The UFGS 07412A, "Non-Structural Metal Roofing," UFGS 07413A , "Metal Siding," and UFGS 07416A, "Structural Standing Seam Metal Roofing (SSMR) System," have already been revised to include ASTM D 5894 testing, as a result of earlier recommendations provided by this research.
2. Field exposure tests in conjunction with EIS or other techniques to measure early stages of corrosion should be pursued to validate the accelerated laboratory testing.

References

American Association of State Highway and Transportation Officials (AASHTO) Standards

AASHTO Provisional Standard, PP30-95, *Standard Practice for Evaluation of Coating Systems with Zinc Primers* (June 1997).

American Society for Testing and Materials (ASTM) Standards

A 653, "Standard Specification for Steel Sheet, Zinc-Coated (Galvanized) or Zinc-Iron Alloy-Coated (Galvannealed) by the Hot-Dip Process."

A 792, "Standard Specification for Steel Sheet, 55% Aluminum-Zinc Alloy-Coated by the Hot-Dip Process."

B 117, "Standard Method of Salt Spray (Fog) Testing."

D 522, "Standard Test Methods for Mandrel Bend Test of Attached Organic Coatings."

D 523, "Standard Test Method for Specular Gloss."

D 714, "Test Method for Evaluating Degree of Blistering of Paints."

D 1654, "Standard Test Method for Evaluation of Painted or Coated Specimens Subjected to Corrosive Environments."

D 2244, "Standard Test Method for Calculation of Color Differences from Instrumentally Measured Color Coordinates."

D 3359, "Standard Test Methods for Measuring Adhesion by Tape Test (Test Method B)."

D 4587, "Standard Practice for Conducting Tests on Paint and Related Coatings and Materials Using a Fluorescent UV-Condensation Light- and Water-Exposure Apparatus."

D 5894, "Standard Practice for Cyclic Salt Fog/UV Exposure of Painted Metal, (Alternating Exposures in a Fog/Dry Cabinet and a UV Condensation Cabinet)."

The Society for Protective Coatings (SSPC) Standards

ERESTC-98 Draft #2, "Standard Method for Evaluating and Rating Exposed Steel Test Coupons."

SSPC-SP 5, Surface Preparation Standard, "White Metal Blast Cleaning."

Related References

Appleman, B.A., "Cyclic Accelerated Testing: The Prospects for Improved Coating Performance Evaluation," *Journal of Protective Coatings and Linings* (November 1989).

Boocock, S.K., "A Report on SSPC Programs to Research Performance Evaluation Methods," *SSPC Proceedings, Evaluating Coatings for Environmental Compliance* (June 1994).

Boocock, S.K., "Meeting Industry Needs for Improved Tests," *Journal of Protective Coatings and Linings* (September 1995).

Chong, S-L, "A Comparison of Accelerated Tests for Steel Bridge Coatings in Marine Environments," *Journal of Protective Coatings and Linings* (March 1997).

Grossman, D.M., "Introduction to Cyclic Corrosion Testing," *SSPC Proceedings, Evaluating Coatings for Environmental Compliance* (June 1994).

Hare, C.H., "Mechanically-Induced Stress form the Manufacturing Process," *Journal of Protective Coatings and Linings* (January 1997).

Hare, C.H., "Hygroscopic Stresses," *Journal of Protective Coatings and Linings* (November 1996).

Hack, Harvey P., and John R. Scully, "Defect Area Determination of Organic Coated Steels in Seawater Using the Breakpoint Frequency Method," *J. Electrochem Soc.,* vol 1 (January 1991, pp 33-40.

Race, T.D., *Laboratory Evaluation of Commercial Fusion-Bonded Epoxy Coatings for Civil Works Applications*, CERL Technical Report (TR) FM-95/06/ADA291876 (January 1995).

Race, T.D., *Laboratory Evaluation of Commercial Epoxy Zinc-Rich Primers for Civil Works Applications*, CERL TR 96/39/ADA306450 (February 1996).

Race, T.D., *Laboratory Evaluation of Commercial Epoxy Coating Systems for Civil Works Applications*, CERL TR 96/87/ADA316083 (August 1996).

Race, T.D., *Evaluation of Coating Systems for Non-Ferrous Metal Surfaces*, CERL TR 97/139/ADA329857 (September 1997).

Scott, J.L., and D.J. Dietz, "Durability of Exterior Coatings: A Review of Standard and Not-So-Standard Exposure Methods," *SSPC Proceedings, Evaluating Coatings for Environmental Compliance* (June 1994).

Simpson, C.H., C.J. Ray, and B.S. Skerry, "Accelerated Corrosion Testing of Industrial Maintenance Paints Using a Cyclic Corrosion Weathering Method," *Journal of Protective Coatings and Linings* (May 1991).

Skerry, B.J., and C.H. Simpson, "Combined Corrosion/Weathering Accelerated Testing of Coatings for Corrosion Control," *Proceedings Corrosion/91* (March 1991).

Timmons, F.D., "Avoiding Paint Failures by Prohesion," *Journal of Oil and Color Chemists Association*, vol 62, No. 4 (1970).

Web Sites

Sustainable Building Sourcebook: Green Building Program
http://www.greenbuilder.com/sourcebook/Roofing.html

RSI (Custom Sheet Metal Fabrication), *Quality Materials from RSI*
http://www.rsimetals.com/materials.html

Coldmatic Building Systems (CBS) *Panel Specs*
http://coldmatic.com/html/body_t4000.html

Appendix: Accelerated Corrosion Resistance Testing and Acceptance Criteria for Hot Dip-Metal/Coil Coated Duplex Systems on Steel Building Panels

2.4.1 Accelerated Corrosion Resistance Test

****

NOTE: The results of the corrosion resistance test will vary depending on the type of hot-dip metal coating.

A 653 Galvanized: 10 (no blistering) and 8 (mean maximum undercutting over 0.5 to 1.0 mm)

A 792 Zinc-Aluminum Alloy: 10 (no blistering) and 9 (mean maximum undercutting over zero to 0.5 mm)

****

Triplicate 75 x 150 mm (3 x 6 in.) samples of the sheets shall withstand an accelerated cyclic corrosion test for a minimum of 2016 hours in accordance with ASTM D 5894, including the scribe requirement in the test. Immediately upon removal of the panels from the test, the coating shall receive a rating of 10, no blistering, as determined by ASTM D 714; a rust rating of 10 as determined by ASTM D 610; and a mean maximum scribe failure rating of not less than 8 (over 0.5 to 1.0 mm) as determined by ASTM D 1654 Method 2 (Scraping).

CERL Distribution

Chief of Engineers
ATTN: CECW-EI (2)
ATTN: CEHEC-IM-LH (2)

Engineer Research and Development Center (Libraries)
ATTN: ERDC, Vicksburg, MS
ATTN: Cold Regions Research, Hanover, NH
ATTN: Topographic Engineering Center, Alexandria, VA

Defense Tech Info Center 22304
ATTN: DTIC-O

7
2/02

REPORT DOCUMENTATION PAGE

Form Approved
OMB No. 0704-0188

Public reporting burden for this collection of information is estimated to average 1 hour per response, including the time for reviewing instructions, searching existing data sources, gathering and maintaining the data needed, and completing and reviewing this collection of information. Send comments regarding this burden estimate or any other aspect of this collection of information, including suggestions for reducing this burden to Department of Defense, Washington Headquarters Services, Directorate for Information Operations and Reports (0704-0188), 1215 Jefferson Davis Highway, Suite 1204, Arlington, VA 22202-4302. Respondents should be aware that notwithstanding any other provision of law, no person shall be subject to any penalty for failing to comply with a collection of information if it does not display a currently valid OMB control number. PLEASE DO NOT RETURN YOUR FORM TO THE ABOVE ADDRESS.

1. REPORT DATE (DD-MM-YYYY)
02-2002

2. REPORT TYPE
Final

3. DATES COVERED (From - To)

4. TITLE AND SUBTITLE
Evaluation of Galvanized and Galvalume/Paint Duplex Coating

5a. CONTRACT NUMBER

5b. GRANT NUMBER

5c. PROGRAM ELEMENT NUMBER

6. AUTHOR(S)
Timothy Race, L.D. Stephenson, and Ashok Kumar

5d. PROJECT NUMBER
622784AT41

5e. TASK NUMBER
CF

5f. WORK UNIT NUMBER
C21

7. PERFORMING ORGANIZATION NAME(S) AND ADDRESS(ES)
U.S. Army Engineer Research and Development Center (ERDC)
Construction Engineering Research Laboratory (CERL)
PO Box 9005
Champaign, IL 61826-9005

8. PERFORMING ORGANIZATION REPORT NUMBER
ERDC/CERL TR-02-8

9. SPONSORING / MONITORING AGENCY NAME(S) AND ADDRESS(ES)
Headquarters, U.S. Army Corps of Engineers (HQUSACE)
441 G. Street, NW.
Washington, DC 20314-1000

10. SPONSOR/MONITOR'S ACRONYM(S)
CEMP-EI

11. SPONSOR/MONITOR'S REPORT NUMBER(S)

12. DISTRIBUTION / AVAILABILITY STATEMENT
Approved for public release; distribution is unlimited.

13. SUPPLEMENTARY NOTES
Copies are available from the National Technical Information Service, 5285 Port Royal Road, Springfield, VA 22161.

14. ABSTRACT

Standing seam metal roofing systems are becoming increasing popular because of lower life-cycle cost and esthetic appeal. The coating systems most commonly used in metal roofs and metal buildings are galvanized or Galvalumed steel, factory-coated with polyvinylidene fluoride (PVF) or silicone modified polyester (SMP). Specimens having these coating systems were subjected to ASTM B 117, conventional salt spray exposure testing and ASTM D 5894 testing in the laboratory, which combines the environmental effects of salt fog and ultraviolet exposure, alternately, and the results were compared. The ASTM D 5894 testing was used to simulate the typical corrosive atmospheric conditions of outdoor exposure. Electro-chemical impedance spectroscopy (EIS) of specimens exposed to ASTM D 5894 accelerated laboratory weathering provided a means of modeling the equivalent circuit parameters, and detecting the onset of incipient corrosion (coating degradation). Results show that both of these systems (galvanized vs. Galvalume®) provide the same corrosion protection, and that EIS can be used to predict the long-term service life based on short-term field tests. Results indicated that ASTM D 5894 testing provides a better means of predicting real-world performance of a coating system than ASTM B 117.

15. SUBJECT TERMS

coatings	corrosion resistance	Galvalume Steel
corrosion control	galvanized steel	polyvinylidene fluoride (PVF2)

16. SECURITY CLASSIFICATION OF:			17. LIMITATION OF ABSTRACT	18. NUMBER OF PAGES	19a. NAME OF RESPONSIBLE PERSON
					Dr. L.D. Stephenson
a. REPORT	b. ABSTRACT	c. THIS PAGE			19b. TELEPHONE NUMBER (include area code)
Unclassified	Unclassified	Unclassified	SAR	34	(217) 373-6758