**Comparison of Approaches for Determining the Failure of Stiffened Cylindrical Shells**

by

**David J. Price**

B.S. Mechanical Engineering
North Carolina State University, 1991
M.S. Engineering
The Catholic University of America, 1999

**DISTRIBUTION STATEMENT A**
Approved for Public Release
Distribution Unlimited

Submitted to the Department of Ocean Engineering and the Department of Mechanical Engineering in Partial Fulfillment of the Requirements for the Degrees of

Master of Science in Naval Architecture and Marine Engineering

and

Master of Science in Mechanical Engineering

at the
Massachusetts Institute of Technology

June 2002

© 2002 David J. Price. All rights reserved.

The author hereby grants to MIT permission to reproduce and to distribute publicly paper and electronic copies of this thesis document in whole or in part.

Signature of Author _____
Department of Ocean Engineering and the
Department of Mechanical Engineering
May 15,2002

Certified by _____
David V. Burke, Senior Lecturer
Department of Ocean Engineering
Thesis Supervisor

Certified by _____
Nicholas M. Patrikalakis, Professor of Ocean and Mechanical Engineering
Kawasaki Professor of Engineering
Thesis Reader

Accepted by _____
Henrik Schmidt, Professor of Ocean Engineering
Chairman, Department Committee on Graduate Students
Department of Ocean Engineering

Accepted by _____
Ain A. Sonin, Professor of Mechanical Engineering
Chairman, Department Committee on Graduate Students
Department of Mechanical Engineering

20020822 009

Page intentionally left blank

**Comparison of Approaches for Determining the Failure of Stiffened Cylindrical Shells**

by

David J. Price

Submitted to the Department of Ocean Engineering and the Department of Mechanical Engineering in Partial Fulfillment of the Requirements for the Degrees of

Master of Science in Naval Architecture and Marine Engineering
and
Master of Science in Mechanical Engineering

## ABSTRACT

The thesis compares the analytical solution, two marine classification society design rules, and two design guides against experimental results for predicting the failure modes (general instability, axisymmetric buckling, and asymmetric collapse of the shell [lobar buckling]) and failure pressures of ring-stiffened cylinders

The analytical solution is first summarized based on several sources. The design rules for the classification societies and the design guidance from two sources are then presented with brief explanations for each one. The design rules used are: American Bureau of Shipping (*Rules for Building and Classing Underwater Vehicles, Systems, and Hyperbaric Facilities*, 1990) and Germanischer Lloyd (*Rules for Underwater Technology*, 1988). The design guides used were Society of Naval Architects and Marine Engineers (*Submersible Vehicle Systems Design*, 1990) and Massachusetts Institute of Technology Course 13A Professional Summer Notes (MIT 13A *Submarine Design Trends*, 2001).

The United States Navy Naval Sea Systems Command, Submarine Structural Integrity Division supplied experimental data for four cylinders that covered the failure modes and allowed comparison between experiment and design rules / guidance.

The comparison of experimental to predicted data found that the design codes and design guides performed adequately in predicting axisymmetric yield and asymmetric buckling. The performance of the design codes and guides in predicting failure by general instability was unsatisfactory. For the experimental failures by general instability, the design codes and guides predicted significantly higher failure pressures than those experimentally determined; resulting in the design codes and guides actually predicting failure by axisymmetric yield in stead of general instability. These inconsistencies in the predictions of failure mode and pressures for general instability should be further explored to determine causes and corrections.

Thesis Supervisor: David V. Burke
Title: Senior Lecturer

Thesis Reader: Nicholas M. Patrikalakis
Title: Professor of Ocean and Mechanical Engineering
Kawasaki Professor of Engineering

# Acknowledgements

I would like to thank Mr. William Will of the Naval Sea Systems Command, Submarine Structural Integrity division for providing the experimental data for the thesis and providing invaluable knowledge into the mechanics of cylindrical failures.

I would also like to thank Dr. David Burke for not only being a very supportive advisor and providing the impetus for the thesis, but for giving much needed and timely guidance throughout the analysis and writing processes.

Lastly I would like to thank Matt Graytek and Stephanie Norris for producing some initial programming of the design rules. These were very important starting points for my analyses.

This thesis is dedicated to:

My parents: William F. Price and Letitia M. Price and
My wife: Shelly L. Price

# Table of Contents


Table of Contents 5
List of Figures 6
List of Tables 6
List of Appendices 6
Chapter 1: Introduction 7
1.1 Failure Types 7
1.2 Concept Exploration 8
1.3 Analysis Techniques 8
1.4 Design Rules and Guides Examined 9

Chapter 2: Overview of Ring-Stiffened Cylindrical Shells 11
2.1 Terminology 11
2.1.1 Material Properties 11
2.1.2 Geometry 12
2.1.2.1 Cylinder Geometry 12
2.1.2.2 Stiffener Geometry 12
2.2 Classification of Stiffeners 14
2.3 Stresses in Cylinders 15

Chapter 3: Analytic Solutions 17
3.1 History of Analyses 17
3.2 Current Theory 18
3.2.1 Axisymmetric Yield 19
3.2.2 Asymmetric Buckling (Lobar Buckling) 23
3.2.3 General Instability 24

Chapter 4: The Design Rules and Analysis Tools 27
4.1 American Bureau of Shipping (ABS) 27
4.1.1 Axisymmetric Yield 27
4.1.2 Asymmetric Buckling 28
4.1.3 General Instability 29
4.2 Germanischer Lloyd 30
4.2.1 Axisymmetric Yield 30
4.2.2 Asymmetric Buckling 35
4.2.3 General Instability 35
4.3 Society of Naval Architects and Marine Engineers (SNAME) 36
4.3.1 Axisymmetric Yield 36
4.3.2 Asymmetric Buckling 37
4.3.3 General Instability 38
4.4 MIT 13A Professional Summer Submarine Design Trends 38
4.4.1 Axisymmetric Yield 38
4.4.2 Asymmetric Buckling 40
4.4.3 General Instability 41

Chapter 5: Experimental Results 43
5.1 NAVSEA Test Cylinders 43
5.1.1 Cylinder 1.d 44
5.1.2 Cylinder 1.f 45
5.1.3 Cylinder 2.a 46
5.1.4 Cylinder 2.c 47
5.2 Calculation to Experiment Comparison 48

Chapter 6: Conclusions 53
6.1 Comparative Analysis Review 53
6.2 Agreements and Differences 54
6.3 Applications of the Models 55
6.4 Further Areas of Study 56

References 57

## List of Figures

Figure 1: Cylinder and Stiffener Geometry 14
Figure 2: Basic Cylindrical Shell Stresses 16
Figure 3: Failure Pressure Ratio versus Slenderness Ratio 19
Figure 4: Coordinate System for a Cylindrical Shell 20
Figure 5: Test Cylinder 1.d Schematic 44
Figure 6: Test Cylinder 1.f Schematic 45
Figure 7: Test Cylinder 2.a Schematic 46
Figure 8: Test Cylinder 2.c Schematic 47

## List of Tables

Table 1: Comparison of Design Rule Calculations to Experimental Results 48
Table 2: Cylinder 1.f Elastic General Instability Failure Pressures 50
Table 3: Cylinder 2.c Elastic General Instability Failure Pressures 51

## List of Appendices

Appendix A: Codes for Test Cylinder 1.d 59
Appendix B: Codes for Test Cylinder 1.f 99
Appendix C: Codes for Test Cylinder 2.a 141
Appendix D: Codes for Test Cylinder 2.c 183

# Chapter 1: Introduction

The widespread use of stiffened cylinders in the marine industry has generated many studies into the stability and failure of these cylinders and methodology for failure prevention. Of primary concern to entities involved with the use of manned submersible vehicles is the design of ring-stiffened cylinders; this type of stiffened cylinder is used for significant portions of the pressure hull. Over a hundred years of theoretical and experimental research has led to a general understanding of the mechanics of failure for these cylinders. Based on this research, marine Classification Societies, such as the American Bureau of Shipping (ABS), the American Petroleum Institute (API), NORSOK and Germanischer Lloyd (GL) have promulgated design rules to provide guidelines on the design and building of stiffened cylinders for safe operation. Other design and analysis theories and guidance are available in texts such as those published by the Society of Naval Architects and Naval Engineers (SNAME).

## 1.1 Failure Types

There are three primary types of failure of ring-stiffened cylinders. They are axisymmetric yielding (AY) of the shell between stiffeners, asymmetric buckling of the shell between stiffeners (Lobar), and general instability of the shell and stiffeners (GI). Axisymmetric yield generally occurs when the shell is relatively heavy and the frames are closely spaced. Lobar buckling can occur when the shell is relatively light and the frames are strong and widely spaced. General Instability can occur when the cylinder is relatively long, the shell is thin and the frames are small. General Instability is very dependent upon eccentricities in the shell, which tend to lower the cylinder's resistance to the General Instability mode. [1]

As analyzed here General Instability is presumed to occur in the elastic region of the stress – strain curve of the material. Cylinders also fail by inelastic General Instability, which occurs at significantly lower pressures than that of elastic General Instability. Failure by this mode is not addressed by the design rules. Other modes of failure also exist such as multi-wave instability, which is a sub-type of General Instability. It can occur in both the elastic and inelastic regions. Again the design rules do not address this failure mode. Several of the classification societies address stiffener tripping, which is the rotation of a stiffener away from perpendicular with the shell, however stiffener tripping is usually a precursor to general instability and is not a separate major failure mode.

## 1.2 Concept Exploration

For this thesis, an emphasis was placed on exploring how the various design rules predicted failure of cylinders that replicate modern submarine design (i.e. the shell was relatively thick compared to the diameter of the cylinder). This was facilitated by experimental failure data from the U.S. Navy's Naval Sea Systems Command (NAVSEA) Submarine Structural Integrity Division. The analysis was limited to ring-stiffened cylinders to remain consistent with the primary concern of the thesis. The test cylinders that were chosen had failed in all three possible modes, allowing for comparison of the design rules in all modes of failure. .

## 1.3 Analysis Techniques

For the analyses, the design rules for the various classification societies and design guidance were programmed into MATHCAD™ for consistency of approach, ease of symbolic representation, and quickness of computations. The analytical solution was also programmed into MATHCAD™ for comparison. The experimental data from the four test cylinders were

then input into each computer code. The codes gave a failure pressure for each type of failure. The lowest calculated pressure was then considered the failure pressure and the corresponding mode was designated the failure mode. The failure modes and pressures were then compared against the experimental results with emphasis placed on agreement between codes and experiment on failure mode (first priority) and then failure pressure (second priority). If a different failure mode was predicted than that experimentally found for a particular cylinder, an analysis was performed for agreement between predicted failure pressures and also the closeness of the failure mode pressures.

## 1.4 Design Rules and Guides Examined

There were two classification society design rules examined: The American Bureau of Shipping (rules from *Rules for Building and Classing Underwater Vehicles, Systems and Hyperbaric Facilities*, 1990 Edition) (reference 2) and Germanischer Lloyd (*Rules for Underwater Technology*, 1988 Edition) (reference 3). Design guides included: The Society of Naval Architects and Marine Engineers (SNAME) (*Submersible Vehicle Systems Design*, 1990) (reference 4) and the Massachusetts Institute of Technology (MIT) Course 13A Professional Summer (13A PS) *Submarine Design Trends* Course notes (reference 5) was also used. The 13A PS is based upon the 1967 version of the SNAME publication Principles of Naval Architecture (PNA) with some modifications determined by Harry Jackson (CAPT, USN Ret.). A third classification society, the American Petroleum Institute (API) was planned to be used, however the immediately available rules from API were not valid for the experimental data used. However, API does have rules to cover the types of cylinders examined here.

Analytic solutions for the three failure modes were gathered from several sources. These sources included *Hydrostatically Loaded Structures: The Structural Mechanics, Analysis and*

*Design of Powered Submersibles* by William Nash (reference 6), *Principles of Naval Architecture*, 1967 edition (reference 1), a David Taylor Model Basin technical paper by J.G. Pulos and V.L. Salerno (reference 7), and several journal articles from the *Transactions of The Royal Institution of Naval Architects by S. Kendrick* (reference 8) and C. T. F. Ross (reference 9).

In Chapter 2 a brief discussion on the terminology of ring-stiffened cylindrical shells is produced along with a short derivation of the basic stresses in these cylinders. Chapter 3 contains the summary of analytic solutions used to predict failure (the solutions are not re-derived), Chapter 4 has the summary of the design rules and guides from the various sources. Chapter 5 describes the test cylinders and then compares the results from experiment to the results predicted by the design rules and guides. Chapter 6 summarizes the results with recommendations for further study.

# Chapter 2: Overview of Ring-Stiffened Cylindrical Shells

Ring-stiffened cylinders are the prevalent construction type in the mid-bodies of modern submersibles. The stiffeners provide additional strength to the shell that is required for the pressure differential between the external hydrostatic pressure and the internal, approximate atmospheric pressure.[6]

## 2.1 Terminology

The various classification societies use slightly different terminology for the cylinder geometries and properties. In the computerized design rules, the symbols used by each classification society are generally used to avoid confusion between the published code and the programs. All of the codes require computation of the moment of inertia (I) of the ring stiffener and the moment of inertia ($I_e$) of an effective ring stiffener (the frame and some length of attached shell). The formulas for I and $I_e$ came from [10].

The terminology can be divided into two categories: material properties and geometry. All stresses and pressures are in pounds per square inch (psi), lengths are in inches (in), areas are in square inches ($in^2$) and moments of inertia are in inches to the fourth power ($in^4$).

### 2.1.1 Material Properties

1) Modulus of Elasticity (E): The slope of the linear region of the stress-strain curve of a given material. For all of the calculations a value of $3 \times 10^7$ psi (a common value for steel) was used.

2) Poisson's Ratio ($\nu$ or $\mu$): The ratio of lateral strain to axial strain in a material. For all calculations, a value of 0.3 (a general figure for steel) was used.

3) Yield Strength ($\sigma_y$ or $f_y$ or k): An arbitrary value for materials marking the onset of plastic deformation of a material. This is usually considered the point of 0.2% permanent strain. This value is of primary concern in the axisymmetric yield calculations. This parameter ranged in value from 65,500 psi to 157,000 psi.

### 2.1.2 Geometry

#### 2.1.2.1 Cylinder Geometry (see Figure 1)

1) Cylinder Length (L or $L_b$ or $L_c$): Overall length of the cylinder between supports. This varies by cylinder and is of primary concern for General Instability calculations

2) Shell Mid-plane Radius (R): Radius from centerline of cylinder to the shell mid-plane.

3) Shell plate thickness (t or $t_p$ or s or h): Thickness of the cylinder shell plating.

#### 2.1.2.2 Stiffener Geometry (see Figure 1)

1) Length between Stiffeners (L or $L_f$ or $L_s$): Distance between centerlines of adjacent stiffeners. This distance was assumed to be constant for each cylinder. This dimension is important for both Axisymmetric Yield and Lobar Buckling.

2) Web Height ($h_w$): Length of the web for 'T' stiffeners or the height of the stiffener for rectangular stiffeners.

3) Web Thickness ($t_w$): Thickness of the web for 'T' stiffeners or the thickness of the stiffener for rectangular stiffeners.

4) Flange Breadth (bf): Width of the flange for 'T' stiffeners. This value is set to zero for rectangular stiffeners.

5) Flange Depth (d): Thickness of the flange for 'T' stiffeners. This value is set to zero for rectangular stiffeners.

6) Stiffener Depth (H): The distance from the shell to the end of the stiffener. This is the stiffener height for rectangular stiffeners and the web height plus the flange depth for 'T' stiffeners.

7) Faying Length (b): The distance of contact of the stiffener to the shell. It is equal to the flange width for 'T' and rectangular stiffeners; if 'I'-beam or wide-beam (WF) stiffeners are used, then equal to the flange breadth in contact with the shell.

8) Effective Length of the Shell ($L_e$): A length of shell to be considered as part of the combined stiffener and shell used in the General Instability analyses. This length is usually a fraction of the stiffener spacing, but many times will be equal to the stiffener spacing.

9) Area of the stiffener (A): Cross-sectional area of the stiffener.

10) Effective Area of the stiffener ($A_{eff}$): Cross-sectional area of the combined stiffener and effective length of shell or a modified area of the stiffener (A) based on the location of the stiffener.

11) Moment of Inertia (I): Area moment of inertia of the dedicated stiffener, used by some codes as part of the calculation for the effective moment of inertia.

12) Effective Moment of Inertia ($I_{eff}$): Area moment of inertia for the combined stiffener and shell, used for General Instability calculations.

**Figure 1: Cylinder and Stiffener Geometry**

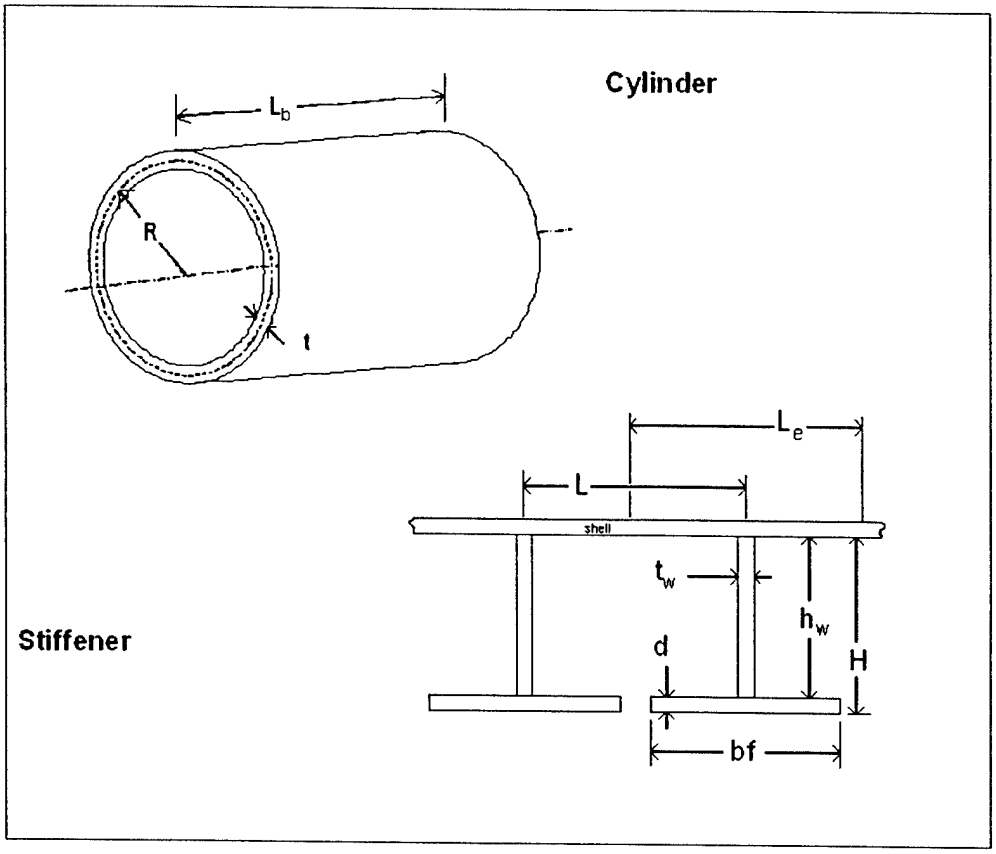


## 2.2 Classification of Stiffeners

There are several methods to classify stiffeners. Of importance to the analysis of cylinders is the location of the stiffener: either internal or external to the cylinder shell. Both types are used for cylinder construction; slight modifications to the design rules (concerning effective areas and moments of inertia) are required based on the location. External stiffeners of equal size to internal stiffeners require more material because of the greater circumferential length but offer the advantage of freeing spacing within the cylinder for equipment / living space. [5]

Another classification of stiffeners are field (light / non-heavy) and heavy (king frame) stiffeners. Heavy stiffeners are substantially larger than the field stiffeners and are used to reduce the effective length of the cylinder for general instability concerns. Field stiffeners are of uniform size, shape, and spacing. For the current analyses no heavy stiffeners were used.

## 2.3 Stresses in Cylinders

A brief discussion of stresses in cylindrical shells is required to set up the derivation of the structural mechanics in support of the analytical solution. As a starting point, a cylinder can be considered a thin-walled structure (shell) if the ratio of the mid-plane radius to the wall thickness is greater than ten. This assumption allows the determination of the stresses by statics alone.[10] All of the cylinders considered are treated as shells. A second assumption in the analysis is to consider the hydrostatic pressure as constant across the cylinder.

Cylindrical shells, exposed to hydrostatic pressure, have two basic stresses imposed by the pressure: hoop stress and axial stress. The equations for the stress are:

1) Hoop (circumferential) Stress: $$\sigma_h = \frac{pR}{t} \tag{1}$$

2) Axial Stress: $$\sigma_x = \frac{pR}{2t} \tag{2}$$

Where p is the external pressure, R is the shell mean radius and t is the shell thickness. Figure 2 shows the derivation of these two equations.

The addition of ring stiffeners to the base shell complicates the hoop stress analysis by introducing non-uniform deformation of the shell in the radial direction. There is also a beam-column effect due to the pressure acting in the axial direction. These effects will be addressed in Chapter 3.

**Figure 2: Basic Cylindrical Shell Stresses**

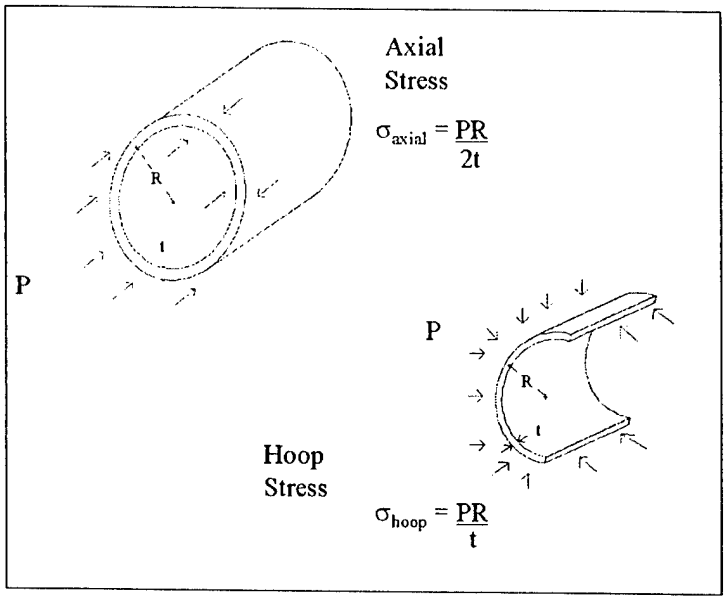


1) Axial Stress

Axial force on a vertical section of the cylinder must equal the axial stress times the circumferential area.

Force balance: $P \cdot \pi \cdot R^2 = 2 \cdot \pi \cdot R \cdot t \cdot \sigma_{axial}$

Which results in:

$$\sigma_{axial} := \frac{P \cdot R}{2 \cdot t}$$

2) Circumferential (Hoop) Stress

The force on a transverse section of shell, with width b must equal the hoop stress times the shell area.

Force balance: $P \cdot 2 \cdot R \cdot b = 2 \cdot b \cdot t \cdot \sigma_{hoop}$

Which results in:

$$\sigma_{hoop} := \frac{P \cdot R}{t}$$

# Chapter 3: Analytic Solutions

Analytic solutions have been proposed and proven for the three major failure modes of stiffened cylinders. This chapter briefly describes the theories and equations used in the experimental analyses.

## 3.1 History of Analyses

The failure of cylinders exposed to external pressure has been studied for almost 150 years. The first attempts at understanding cylinder behavior was done by experiment and empirical relationships in the 1850's.[6] The first analytic solution for a non-reinforced cylinder was presented by G. H. Bryan in 1888.[9] The first analysis of a reinforced cylinder appeared in 1913 by R. V. Southwell, followed a year later by a solution to the elastic buckling of a thin shell proposed by von Mises.[6] In 1934 Widenburg proposed a solution for asymmetric buckling that is independent of the number of lobes of failure.[6] This equation is the one used in the current analysis. Solutions for axisymmetric yield were first put forward by von Sanden and Günther in 1920.[9] Viterbo presented a modified version of Sanden and Günther's solution in 1930.[9] Pulos and Salerno presented a solution that included the Sanden and Günther solution, the Viterbo modification and a term to account for the bending stress in the cylinder caused by the axial pressure.[9] The Pulos and Salerno solution is used in this thesis. For elastic general instability, the first reported analysis was presented by Tokugawa in 1929. In 1954 A. R. Bryant developed a similar equation using a different methodology. [6]

Analytical work from the 1950's onward has focused on obtaining solutions for different boundary conditions and more fully reconciling the analytic predictions with experimental results and to more fully understand the effects of initial imperfections in the cylinder's material

and geometric properties. With the advent of power digital computers and the use of finite element analysis there has been great strides made in understanding the failure of cylinders.

## 3.2 Current Theory

For this thesis, analytic solutions were collected from several sources for the modes of failure. A comprehensive theoretical solution that addresses all modes of failure is not presented. Reference 6 provides a good summation of the currently used analytic solutions.

A first indicator of the failure mode of a cylinder is found by plotting the cylinder's slenderness ratio ($\lambda$) against the ratio of the shell buckling pressure($p_c$) to the hoop pressure at yield($p_y$) ($\psi$).[1] The equations for these factors are given below.

$$\lambda = \frac{\frac{L_s}{D}}{\left(\frac{t_p}{D}\right)^{\frac{3}{2}}} \cdot \left(\frac{\sigma_y}{E}\right)^{\frac{1}{2}} \tag{3}$$

$$\psi = \frac{p_c}{p_y} \tag{4}$$

Figure 3 shows the plot of $\psi$ versus $\lambda$. If the slenderness ratio is less than approximately 1.14 the cylinder should fail by axisymmetric yield; if $\lambda$ is greater than 1.14 then the cylinder should fail by lobar buckling. If the shell and stiffeners are not of sufficient size, the cylinder may fail by general instability at a pressure less than that found in Figure 3.[1] By using two assumptions (the material is steel with $\upsilon = 0.3$ and $L_s/D >> t_p/D$) it can be shown that: [1]

$$\psi = \frac{1.30}{\lambda^2} \tag{5}$$

This is the buckling part of the curve in Figure 3.

**Figure 3: Failure Pressure Ratio versus Slenderness Ratio**

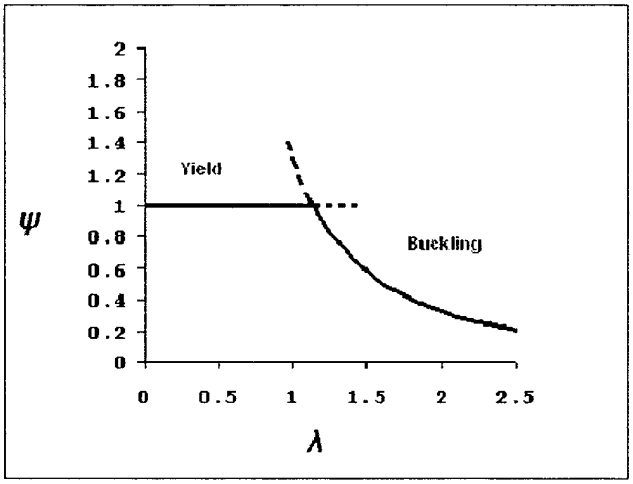


The treatment of boundary / end conditions of the cylinder is a vitally important factor in the analytic solutions. The literature is full of discussion on what types of end condition to use, with the choices ranging from full clamped ends to simply supported ends. The extreme cases are hard to create in reality and therefore the experimental results tend to fall between the ranges of predictions. Experiments have shown that partially clamped cylinders provide significantly higher failure pressures than that predicted by mathematical models utilizing simply supported ends.[8] For this thesis, no discrete boundary conditions were required to be stated for input into the equations.

### 3.2.1 Axisymmetric Yield

As mentioned in section 3.1 axisymmetric yield has been studied since the 1920's. The solution summarized here was put forward by Pulos and Salerno in 1961. It is based on the previous works of van Sunden and Günther and Viterbo and includes a previously not included "beam – column" effect due to the hydrostatic pressure acting in the axial direction of the cylinder.[7] The governing differential equation is:

$$D\left(\frac{d^4}{dx^4}w\right) + \frac{p \cdot R}{2} \cdot \frac{d^2}{dx^2}w + \frac{E \cdot t}{R^2} \cdot w = p \cdot \left(1 - \frac{\nu}{2}\right) \tag{6}$$

Where:

$$D := \frac{E \cdot t^3}{12 \cdot \left(1 - \nu^2\right)}$$ D is the flexural rigidity of the shell

The term $\frac{pR}{2}$ represents the beam – column effect. It makes the solution to equation (6) a non-linear function of pressure and was the term neglected in the earlier analyses of axisymmetric yield. Figure 4 shows the coordinate system used in reference 7 to derive the governing equation. x, φ, and r are the axial, circumferential and axial coordinates respectfully with u, v, and w being the corresponding displacements. [7]

**Figure 4: Coordinate System for a Cylindrical Shell**

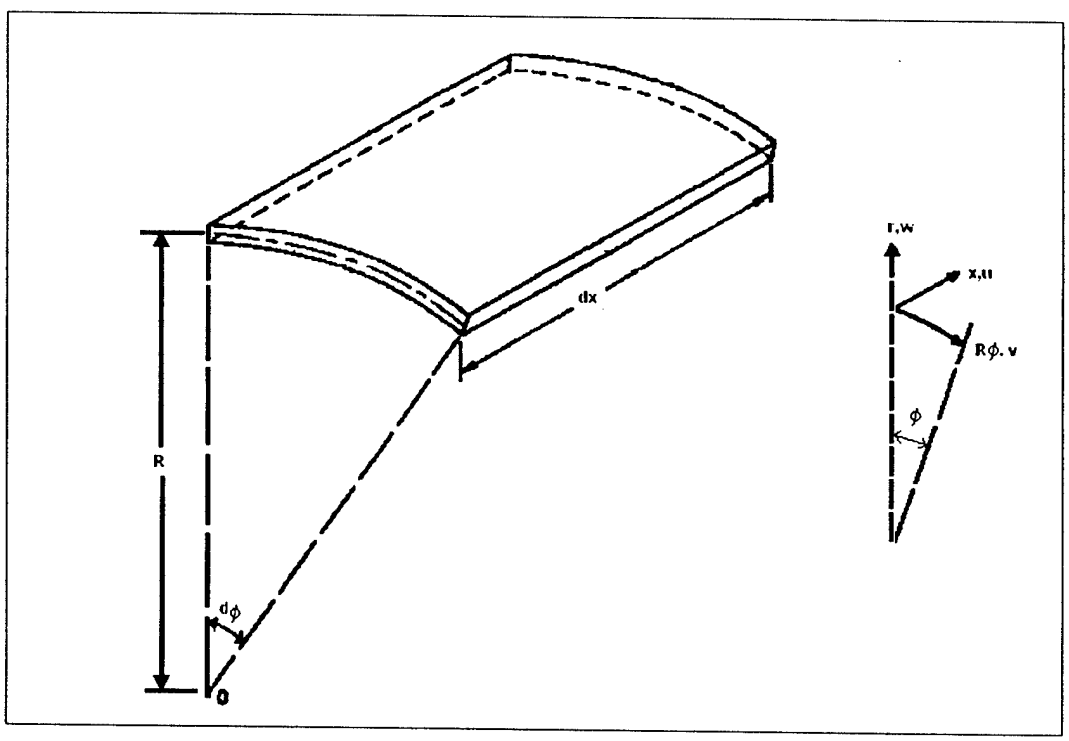

Following typical practice in the solution of non-homogeneous differential equations the general solution of the governing equation can be written as the sum of the solution of the homogeneous equation and a particular solution.[6] The solution to the homogeneous equation produces four roots ($\lambda_1$-$\lambda_4$). By analysis, placement of the origin of the coordinate system to take advantage of symmetry, and trigonometric identities, the general solution can be given as:

$$w = B\cosh\lambda_1 x + F\cosh\lambda_1 x - \frac{pR^2}{Et}(1-\frac{\upsilon}{2}) \tag{7}$$

where B and F are arbitrary constants which can be found by applying boundary conditions to the equation.[7]. After further mathematical substitutions several dimensionless parameters were introduced into the solution to allow easier solving of the problem. Four of these parameters ($F_1$-$F_4$) were transcendental functions based on the geometry of the cylinder. These functions were originally graphed to allow for a relatively quick solution to be found for a given cylinder. Finally an equation for the failure pressure of a given cylinder was determined. This equation along with the dimensionless parameters is given below.

$$p_c := \frac{\sigma_y \cdot \left(\frac{t}{R}\right)}{\sqrt{\frac{3}{4} + \text{denom1} - \text{denom2}}} \tag{8}$$

Where:

$$\text{denom1} := A^2 \cdot \left[ F_2^{\,2} + F_2 \cdot F_4 \cdot (1 - 2\cdot\mu) \cdot \left( \sqrt{\frac{0.91}{1-\mu^2}} \right) + F_4^{\,2} \cdot \left(1 - \mu + \mu^2\right) \cdot \left( \frac{0.91}{1-\mu^2} \right) \right]$$

$$\text{denom2} := \left(\frac{3}{2}\right) \cdot A \cdot \left( F_2 - \mu \cdot F_4 \cdot \sqrt{\frac{0.91}{1-\mu^2}} \right)$$

$$A := \frac{\left(1 - \frac{\mu}{2}\right)\cdot\alpha}{\alpha + \beta + (1 - \beta)\cdot F_1}$$

$$\gamma := \frac{p_c}{2\cdot E}\cdot\left[\sqrt{3\cdot\left(1 - \mu^2\right)}\right]\cdot\left(\frac{R}{t}\right)^2$$

$$\eta_1 := \frac{1}{2}\cdot\sqrt{1 - \gamma}$$

$$\eta_2 := \frac{1}{2}\cdot\sqrt{1 + \gamma}$$

$$\theta := \sqrt[4]{3\cdot\left(1 - \mu^2\right)}\cdot\frac{L}{\sqrt{R\cdot t}}$$

$$F_1 := \frac{4}{\theta}\cdot\frac{\cosh(\eta_1\cdot\theta)^2 - \cos(\eta_2\cdot\theta)^2}{\frac{\cosh(\eta_1\cdot\theta)\cdot\sinh(\eta_1\cdot\theta)}{\eta_1} + \frac{\cos(\eta_2\cdot\theta)\cdot\sin(\eta_2\cdot\theta)}{\eta_2}}$$

$$F_2 := \frac{\frac{\cosh(\eta_1\cdot\theta)\cdot\sin(\eta_2\cdot\theta)}{\eta_2} + \frac{\sinh(\eta_1\cdot\theta)\cdot\cos(\eta_2\cdot\theta)}{\eta_1}}{\frac{\cosh(\eta_1\cdot\theta)\cdot\sinh(\eta_1\cdot\theta)}{\eta_1} + \frac{\cos(\eta_2\cdot\theta)\cdot\sin(\eta_2\cdot\theta)}{\eta_2}}$$

$$F_3 := \sqrt{\frac{3}{1 - \mu^2}}\cdot\frac{\frac{\cos(\eta_2\cdot\theta)\cdot\sin(\eta_2\cdot\theta)}{\eta_2} - \frac{\cosh(\eta_1\cdot\theta)\cdot\sinh(\eta_1\cdot\theta)}{\eta_1}}{\frac{\cosh(\eta_1\cdot\theta)\cdot\sinh(\eta_1\cdot\theta)}{\eta_1} + \frac{\cos(\eta_2\cdot\theta)\cdot\sin(\eta_2\cdot\theta)}{\eta_2}}$$

$$F_4 := \sqrt{\frac{3}{1 - \mu^2}}\cdot\frac{\frac{\cosh(\eta_1\cdot\theta)\cdot\sin(\eta_2\cdot\theta)}{\eta_2} - \frac{\sinh(\eta_1\cdot\theta)\cdot\cos(\eta_2\cdot\theta)}{\eta_1}}{\frac{\cosh(\eta_1\cdot\theta)\cdot\sinh(\eta_1\cdot\theta)}{\eta_1} + \frac{\cos(\eta_2\cdot\theta)\cdot\sin(\eta_2\cdot\theta)}{\eta_2}}$$

An iterative process is required for the general case where the parameter $\gamma$ is not zero. The process begins with assuming that $\gamma$ is zero, finding the failure pressure then recalculating $\gamma$ and

solving the equations for the failure pressure again. Usually only two to three iterations are needed for satisfactory convergence of the failure pressure.[7]

### 3.2.2 Asymmetric Buckling (Lobar Buckling)

Asymmetric buckling is characterized by circumferential lobes between ring stiffeners. As noted above this mode of failure will occur when the cylinder's slenderness ratio is relatively high. This can be further characterized by a relatively thin shell thickness and widely spaced stiffeners.[1] R. von Mises first proposed a solution to the buckling of un-stiffened cylinders under hydrostatic pressure in 1929. He assumed sinusoidal displacements in the axial and circumferential directions to enable solving of a set of linearized partial differential equations that represented the elastic action of the shell.[6] He eventually obtained the following equation for the buckling pressure:

$$p_{vm} = \left(\frac{E \cdot t}{R}\right) \cdot \left[\frac{1}{n^2 + .5 \cdot \left(\frac{\pi \cdot R}{L}\right)^2}\right] \cdot \left[\left[\frac{\left(\frac{\pi \cdot R}{L}\right)^4}{\left[n^2 + \left(\frac{\pi \cdot R}{L}\right)^2\right]^2}\right] + \left[\frac{\left(\frac{t}{R}\right)^2}{12 \cdot \left(1 - \mu^2\right)}\right] \cdot \left[n^2 + \left(\frac{\pi \cdot R}{L}\right)^2\right]^2\right] \qquad (9)$$

The buckling pressure is dependent upon the number of circumferential lobes (n), which must be an integer value. This fact requires an iterative process of varying n until the lowest pressure is determined.

In 1933 Widenburg solved the above equation in way that was independent of n. From test data the buckling pressures from the von Mises equation and the Widenburg approximation differ by no more than 3.5%. [6]. Further investigation into the bucking of stiffened cylinders determined that the Widenburg equation worked very well by replacing the length of the cylinder by the length between stiffeners. Therefore the Widenburg equation (equation 10), shown below, is the equation used in the current analyses.

$$p_{LB} = \frac{2.42 \cdot E \cdot \left(\frac{t}{D}\right)^{2.5}}{\left(\frac{L}{D} - 0.45\sqrt{\frac{t}{D}}\right) \cdot \left(1 - \mu^2\right)^{0.75}} \tag{10}$$

### 3.2.3 General Instability

General instability consists of the yielding of both the cylindrical shell and ring stiffeners. A cylinder may be susceptible when the stiffeners are undersized when compared to the shell thickness and the cylinder is relatively long.[6] General instability may occur in either the elastic or inelastic stress region of a material. Elastic general instability is the mode covered by the available literature and is addressed here. Inelastic general instability has been studied mainly by government laboratories and most of the knowledge of this failure mode is classified material and therefore unavailable to the present author. [11]

The first analysis of general instability was presented by T. Tokugawa in 1929. [6] His methodology considered the failure as a combination of the failure of the ring stiffeners and shell buckling with each taking place separately. [9] In the 1940's S. Kendrick used a strain energy methodology to determine the failure pressure. In 1953 A. R. Bryant used a simpler strain energy method and determined an equation similar to both Kendrick's and Tokugawa's. [1, 9] The Bryant equation is therefore used for this analysis and is shown below as equation 10.

$$p_{GI} = \frac{E \cdot t}{R} \cdot \frac{\lambda^4}{\left(n^2 - 1 + \frac{\lambda^2}{2}\right) \cdot \left(n^2 + \lambda^2\right)^2} + \frac{\left(n^2 - 1\right) \cdot E \cdot I_e}{R^3 \cdot L} \tag{11}$$

Where:

$$\lambda := \frac{\pi \cdot R}{L_b}$$

The first term can be considered the failure of the shell and the second term can be considered the failure of a combined stiffener and an effective length of shell.[6] This effective length has had much discussion in the literature over the decades. Bryant assumed the length to be the spacing between the stiffeners, but others have proposed various corrections based on the cylinder's geometric and material properties.[5] For this thesis, the effective length used was the stiffener spacing.

Similar to the von Mises buckling pressure determination, the number of circumferential lobes (n) must be found that minimizes the failure pressure. The number of circumferential lobes is usually between 2 and 4.[5] The factor $\lambda$ is the number of longitudinal lobes in the cylinder.

This page intentionally left blank

# Chapter 4: The Design Rules and Analysis Tools

The two classification societies' design rules that were utilized were the American Bureau of Shipping and the Germanischer Lloyd rules. These were chosen for their availability, their different levels of simplification of equations, their coverage of the specific geometries of the experimental cylinders, and their inclusion of all three failure modes. The Society of Naval Architects and Marine Engineers Submersible Vehicle Systems Design and Principles of Naval Architecture (PNA) were chosen for analysis as SNAME is the primary design society in the United States and has comprehensive guidelines for cylinders. The MIT 13A Professional Summer Submarine Design Trends notes were used because of the author's familiarity and the complete analysis of the failure modes.

## 4.1 American Bureau of Shipping (ABS)

The ABS design rules, as delineated in the *Rules for Building and Classing Underwater Vehicles, Systems and Hyperbaric Facilities* (1990), give a brief and conservative approach for determining the critical / collapse pressures for each failure mode. The ABS design rules do not explicitly name the failure modes, but there are distinct equations for the three modes.

### 4.1.1 Axisymmetric Yield

This mode is designated the yield pressure at midbay and midplane of a cylinder.[2] The formula accounts for the major parts of the analytic solution, but uses single value functions for the shell parameters and does not explain the functions of each part of the equation. The rules do account for the difference between internal and external frames by squaring the mid-plane radius to stiffener radius ratio for external stiffeners. The base equation follows:

$$P_y := \frac{\sigma_y \cdot \frac{t}{R}}{1 - F} \tag{12}$$

Where

$$F := \frac{A \cdot \left(1 - \frac{\nu}{2}\right) \cdot G}{A + t_w \cdot t + \frac{2N \cdot t \cdot L}{\theta}}$$

$$A := A_s \cdot \left(\frac{R}{R_s}\right)$$ Internal Stiffeners or

$$A := A_s \cdot \left(\frac{R}{R_s}\right)^2$$ External Stiffeners

$$\theta := \left[3 \cdot \left(1 - \nu^2\right)\right]^{\frac{1}{4}} \cdot M$$

$$M := \frac{L}{\sqrt{R \cdot t}}$$

$$Q := \frac{\theta}{2}$$

$$N := \frac{\cosh(2 \cdot Q) - \cos(2 \cdot Q)}{\sinh(2 \cdot Q) + \sin(2 \cdot Q)}$$

$$G := 2 \cdot \frac{(\sinh(Q) \cdot \cos(Q) + \cosh(Q) \cdot \sin(Q))}{\sinh(2 \cdot Q) + \sin(2 \cdot Q)}$$

$$H := \frac{\sinh(2Q) - \sin(2 \cdot Q)}{\sinh(2 \cdot Q) + \sin(2Q)}$$

### 4.1.2 Asymmetric Buckling

This is called the Von Mises buckling pressure for a cylinder. It is the Widenburg approximation that is used by most of the classification societies.

$$P_m := \frac{2.42 \cdot E \cdot \left(\frac{t}{2 \cdot R}\right)^{\frac{5}{2}}}{\left(1 - \nu^2\right)^{\frac{3}{4}} \cdot \left[\frac{L}{2 \cdot R} - 0.45 \cdot \left(\frac{t}{2 \cdot R}\right)^{\frac{1}{2}}\right]} \tag{13}$$

The ABS code then has a range of allowable pressures depending upon the ratio of $P_m$ to $P_y$. Below is the logic for the maximum allowable working pressure for inter-stiffener strength ($P_c$). Further safety factors are then applied to lower the allowable pressure in practice.

$$P_c := \begin{cases} \frac{P_m}{2} & \text{if } \frac{P_m}{P_y} \le 1 \\ P_y \cdot \left(1 - \frac{P_y}{2 \cdot P_m}\right) & \text{if } 1 < \frac{P_m}{P_y} \le 3 \\ \frac{5}{6} \cdot P_y & \text{if } \frac{P_m}{P_y} > 3 \end{cases}$$

### 4.1.3 General Instability

For the elastic general instability, the ABS code uses the Bryant equation with an effective length not equal to one frame space. The effective length is given below.

$L_e := \min\begin{pmatrix} 1.5 \cdot \sqrt{R \cdot t} \\ 0.75 \cdot L_s \end{pmatrix}$ The equation for the failure pressure is broken into three parts, but the total is equivalent to the Bryant formula.

$$p_{n1}(n) := \frac{E \cdot t}{R} \cdot A_1(n) + \frac{E \cdot I_e \cdot A_2(n)}{R^3 \cdot L} \tag{14}$$

Where:

$$A_1(n) := \frac{\lambda^4}{\left(A_2(n) + \frac{\lambda^2}{2}\right)\cdot\left(n^2 + \lambda^2\right)^2}$$

$$A_2(n) := n^2 - 1$$

$$\lambda := \frac{\pi \cdot R}{L_c}$$

## 4.2 Germanischer Lloyd

The design rules for Germanischer Lloyd are from Rules for Underwater Technology (1988 edition). The rules address all three failure modes very thoroughly and flow charts are provided to aide in programming the code for computer use. These rules also address out-of-roundness up to a nominal value of 0.5% of the mid-plane shell radius by determining a reduced allowable pressure.[3]

### 4.2.1 Axisymmetric Yield

The code for axisymmetric yield resembles the Pulos and Salerno methodology with some additions to account for the transition of the material into the plastic range during yield. The methodology consists of first guessing a pressure lower than the failure pressure (the test cases used 1 psi as the starting point) then iterating through a series of equations to determine the shell stresses. If the determined shell stress becomes greater than 0.8 of the yield strength of the material, then a Secant Modulus of Elasticity ($E_s$), a Tangent Modulus of Elasticity ($E_t$) and a plastic range Poisson's Ratio ($\upsilon_p$ ) is calculated and used to determine the other calculation factors. The determination of the integer m in equation (14) is described in the code below.

$$p_m := p_{aa} \cdot C_0 \cdot \left[\left(\frac{\alpha_1 \cdot L_1}{\pi \cdot m}\right)^2 + \frac{1}{4}\cdot\left(\frac{\pi \cdot m}{\alpha_1 \cdot L_1}\right)^2\right] \tag{15}$$

Where:

$$\alpha_1 := \sqrt[4]{\frac{3\cdot\left[\frac{C_2}{C_1} - \left(\nu_p\cdot\frac{C_3}{C_1}\right)^2\right]}{s^2\cdot R^2}}$$

$$p_{aa} := \frac{2\cdot s^2\cdot E_s}{R^2\cdot\sqrt{3\cdot\left(1-\nu_p^{\,2}\right)}}$$

Must iterate on the integer m until trial is ≤ trial2. By meeting this condition the minimum failure pressure is found (with the minimum m).

$$\text{trial} := \frac{\alpha_1\cdot L_1}{\pi}$$

$$\text{trial2} := \sqrt{\frac{m}{2}\cdot(m+1)}$$

$$H_1 := \left[1 + H_4\cdot\left[H_2^{\,2} - 3\cdot\left(1-\nu_p^{\,2}\right)\right]\right]$$

$$H_2 := \left[\left(2-\nu_p\right) - \left(1-2\cdot\nu_p\right)\cdot K_o\right]$$

$$H_3 := \left[\left(1-2\cdot\nu_p\right) - \left(2-\nu_p\right)\cdot K_o\right]$$

$$H_4 := \frac{1-\frac{E_t}{E_s}}{4\cdot\left(1-\nu_p^{\,2}\right)\cdot K_1}$$

$$C_0 := \sqrt{\frac{C_1\cdot C_2 - \nu_p^{\,2}\cdot C_3^{\,2}}{1-\nu_p^{\,2}}}$$

$$C_1 := \left(1 - \frac{H_2^{\,2}\cdot H_4}{H_1}\right)$$

$$C_2 := \left(1 - \frac{H_3^2 \cdot H_4}{H_1}\right)$$

$$C_3 := \left(1 + \frac{H_2 \cdot H_3 \cdot H_4}{\nu_p \cdot H_1}\right)$$

$C_4$ is not used for cylinders without heavy stiffeners.

$$C_5 := \alpha \cdot L_1$$

$$p_{ast} := \frac{2 \cdot s^2 \cdot E}{R^2 \cdot \sqrt{3 \cdot \left(1 - \nu^2\right)}}$$ critical pressure, elastic, calculation factor

p = 1 psi (arbitrary low pressure)

This is the actual starting point of the iteration. A pressure (p) is guessed; the code then calculates the failure pressure. If the failure pressure is greater than the guessed pressure, the applied pressure is increased by a set amount. This continues until the two pressures, p and pm are within a chosen delta of each other. This is essentially the method of Pulos and Salerno with a simpler method for iterating on the presumed pressure.

$$G := \frac{p}{p_{ast}}$$

$$C_6 := \frac{1}{2} \cdot \sqrt{1 - G}$$

$$C_7 := \frac{1}{2} \cdot \sqrt{1 + G}$$

$$C_8 := C_5 \cdot C_6$$

$$C_9 := C_5 \cdot C_7$$

$$C_{10} := \frac{\left(1 - \frac{\nu}{2}\right) \cdot \frac{A}{s \cdot L_1}}{\frac{A}{s \cdot L_1} + \frac{b}{L_1} + \left(1 - \frac{b}{L_1}\right) \cdot F_1}$$

$$C_{11} := \sqrt{\frac{0.91}{1-\nu^2}}$$

$$F_1 := \frac{4}{C_5} \cdot \frac{\cosh(C_8)^2 - \cos(C_9)^2}{\frac{\cosh(C_8)\cdot\sinh(C_8)}{C_6} + \frac{\cos(C_9)\cdot\sin(C_9)}{C_7}}$$

$$F_2 := \frac{\frac{\cosh(C_8)\cdot\sin(C_9)}{C_7} + \frac{\sinh(C_8)\cdot\cos(C_9)}{C_6}}{\frac{\cosh(C_8)\cdot\sinh(C_8)}{C_6} + \frac{\cos(C_9)\cdot\sin(C_9)}{C_7}}$$

$$F_3 := \sqrt{\frac{3}{1-\nu^2}} \cdot \frac{\frac{\cos(C_9)\cdot\sin(C_9)}{C_7} - \frac{\cosh(C_8)\cdot\sinh(C_8)}{C_6}}{\frac{\cosh(C_8)\cdot\sinh(C_8)}{C_6} + \frac{\cos(C_9)\cdot\sin(C_9)}{C_7}}$$

$$F_4 := \sqrt{\frac{3}{1-\nu^2}} \cdot \frac{\frac{\cosh(C_8)\cdot\sin(C_9)}{C_7} - \frac{\sinh(C_8)\cdot\cos(C_9)}{C_6}}{\frac{\cosh(C_8)\cdot\sinh(C_8)}{C_6} + \frac{\cos(C_9)\cdot\sin(C_9)}{C_7}}$$

The functions F1 through F4 are equivalent to those presented in the analytic solution.

$$\alpha := \sqrt[4]{\frac{3\cdot(1-\nu^2)}{s^2\cdot R^2}}$$ shape factor

The following set of equations determines the stresses at the mid-bay of the shell.

$$\sigma_o := \frac{-p\cdot R}{s}$$

$$\sigma_x := \sigma_o\cdot\left(\frac{1}{2} + C_{10}\cdot C_{11}\cdot F_4\right) \qquad \sigma_{x1} := \sigma_o\cdot\left(\frac{1}{2} - C_{10}\cdot C_{11}\cdot F_4\right)$$

$$\sigma_\phi := \sigma_o\cdot\left(1 - C_{10}\cdot F_2 + \nu\cdot C_{10}\cdot C_{11}\cdot F_4\right) \qquad \sigma_{\phi 1} := \sigma_o\cdot\left(1 - C_{10}\cdot F_2 - \nu\cdot C_{10}\cdot C_{11}\cdot F_4\right)$$

$$K_o := \frac{\sigma_\phi}{\sigma_x}$$

$$\sigma_i := \sqrt{\sigma_x^{\ 2} + \sigma_\phi^{\ 2} - \sigma_x \cdot \sigma_\phi}$$

If the calculated stress is ≥ 0.8k then the following equations are used to determine the material properties in the elastic – plastic region. The code is somewhat circular, the assumption was made to determine the strain ($\varepsilon_1$) from the previously calculated stress then to find a new stress level by the equation given in the code.

$$\sigma := -K_o \cdot \sigma_x$$

$$\varepsilon_1 := \frac{\sigma}{E}$$

$$\sigma := k \cdot \left( .8 + .2 \cdot \tanh\left( 5 \cdot \frac{E}{k} \cdot \varepsilon_1 - 4 \right) \right)$$

$$\varepsilon := \frac{k}{E} \cdot \left( 0.8 + 0.2 \cdot \operatorname{atanh}\left( 5 \cdot \frac{\sigma}{k} - 4 \right) \right)$$

$$E_s := \frac{k}{\varepsilon} \cdot \left[ 0.8 + 0.2 \cdot \left( \tanh\left( 5 \cdot \frac{E}{k} \cdot \varepsilon - 4 \right) \right)^2 \right]$$

$$E_t := E \cdot \left( 1 - \tanh\left( 5 \cdot \frac{E}{k} \cdot \varepsilon - 4 \right) \right)$$

$$\nu_p := \left[ \frac{1}{2} - \left( \frac{1}{2} - \nu \right) \cdot \frac{E_s}{E} \right]$$

$$E \leftarrow \sqrt{E_s \cdot E_t}$$

$$K_1 := \left( 1 - K_o + K_o^{\ 2} \right)$$

### 4.2.2 Asymmetric Buckling

For asymmetric bucking the Germanischer Lloyd code uses a modified version of equation 9. Therefore the dependence upon the number of lobes is not removed and should give a better estimate of the buckling pressure. The equation is given below.

$$p_{n1}(n) := \frac{E \cdot s \cdot \beta_{n1}(n)}{R} \tag{16}$$

Where:

$$\beta_{n1}(n) := \frac{\left[\left(\frac{n^2}{\lambda_1^2} + 1\right)^{-2} + \frac{s^2 \cdot \left(n^2 - 1 + \lambda_1^2\right)^2}{12 \cdot R^2 \cdot \left(1 - \nu^2\right)}\right]}{n^2 - 1 + .5 \cdot \lambda_1^2}$$

$$\lambda_1 := \frac{\pi \cdot R}{L_1}$$

### 4.2.3 General Instability

For elastic general instability, the code uses the Bryant equation with the effective moment of inertia based upon the effective length of shell as defined:

$$L_{etest} := b + \sqrt{2 \cdot R \cdot s}$$

$$L_e := \begin{cases} L_{etest} & \text{if } L_{etest} \le L_1 \\ L_1 & \text{otherwise} \end{cases}$$ where $L_1$ is the frame spacing

The base equation for general instability also uses a modified radius ($R_0$) which is the radius to the centroid of the combined stiffener and effective length of shell. For this thesis no "heavy" or "king frame" stiffeners were used, however the code allows for these stiffeners with several more equations.

$$p_{n1a}(n) := p_o(n) + p_1(n) \tag{17}$$

Where:

$$p_o(n) := \frac{E \cdot s \cdot \beta_{n2}(n)}{R}$$

$$p_1(n) := \frac{\left(n^2 - 1\right) \cdot E \cdot I_e}{R_o^{\,3} \cdot L_1}$$

$$\beta_{n2}(n) := \frac{\lambda_2^{\,4}}{\left(n^2 - 1 + 0.5 \cdot \lambda_2^{\,2}\right) \cdot \left(n^2 + \lambda_2^{\,2}\right)^2}$$

$$L := L_3$$

$$\lambda_2 := \frac{\pi \cdot R}{L}$$

## 4.3 Society of Naval Architects and Marine Engineers (SNAME)

The SNAME code was taken from *Submersible Vehicle Systems Design (1990)*. SNAME is not a classification society as ABS and Germanischer Lloyd, but it does provide many of the professional and technical resource material for naval architects in the United States. The current codes are revised versions of those found in the SNAME publication Principles of Naval Architecture (1967 edition), reference 1. The code addresses all three modes of failure with the least complex set of equations of those under current study.

### 4.3.1 Axisymmetric Yield

For axisymmetric yield, the methodology simplifies the analytic solution by using the older theory of von Sanden and Günther instead of the solution put forward by Pulos and Salerno in reference 7. The methodology thus neglects the beam-column effect of the axial pressure. This is justified by designing the shell to yield vice buckle.[1]

$$p_y := \frac{\sigma_y \cdot \frac{t}{R}}{1 + H \cdot \left( \frac{0.85 - B}{1 + \beta} \right)} \tag{18}$$

Where:

$$B := \frac{t_w \cdot t}{A_r + t_w \cdot t}$$

$$\theta := 10 \cdot \left[ 12 \cdot \left( 1 - \mu^2 \right) \right]^{\frac{1}{4}} \cdot \left( \frac{L_f}{2 \cdot R} \right) \cdot \left( \frac{50 \cdot t}{R} \right)^{-\left(\frac{1}{2}\right)}$$

$$N := \frac{\cosh(\theta) - \cos(\theta)}{\sinh(\theta) + \sin(\theta)}$$

$$\beta := \frac{11 \cdot N}{\sqrt{50 \cdot \frac{t}{R}}} \cdot \left( \frac{t^2}{A_r + t_w \cdot t} \right)$$

$$H := -\left( \frac{3 \cdot \sinh\left(\frac{\theta}{2}\right) \cdot \cos\left(\frac{\theta}{2}\right) + \cosh\left(\frac{\theta}{2}\right) \cdot \sin\left(\frac{\theta}{2}\right)}{\sinh(\theta) + \sin(\theta)} \right)$$

### 4.3.2 Asymmetric Buckling

For Lobar buckling, the code uses the Widenburg approximation equation that is independent of the number of failure lobes. This is the same as used by ABS.

$$p_b := \left[ \frac{2.42 \cdot E}{\left(1 - \mu^2\right)^{\frac{3}{4}}} \right] \cdot \left[ \frac{\left( \frac{t}{2 \cdot R} \right)^{\frac{5}{2}}}{\left[ \frac{L_f}{2 \cdot R} - 0.45 \cdot \left( \frac{t}{2 \cdot R} \right)^{\frac{1}{2}} \right]} \right] \tag{19}$$

### 4.3.3 General Instability

For general instability, the code uses the unmodified Bryant equation; therefore the length of shell used in the moment of inertia calculation is one stiffener spacing. The code suggests that the critical value of n is between 2 and 4.

$$p_{cr1}(n) := \frac{E \cdot t}{R} \cdot \frac{m^4}{\left(n^2 - 1 + \frac{m^2}{2}\right) \cdot \left(n^2 + m^2\right)^2} + \frac{\left(n^2 - 1\right) \cdot E \cdot I_e}{R^3 \cdot L_f} \tag{20}$$

Where:

$$m := \frac{\pi \cdot R}{L_b}$$

## 4.4 MIT 13A Professional Summer Submarine Design Trends

The Professional Summer notes are a compilation of design theories from Harry Jackson (CAPT, USN, Ret.) used to instruct the MIT course 13A students in the basics of submarine design. The actual purpose of the code is to evaluate a proposed submarine design given depth and material criteria; some modifications were required to provide the failure pressures. The failure equations for lobar buckling and general instability are generally from reference 1, however some small modifications have been made. A complete stress calculation is included for axisymmetric yield.

### 4.4.1 Axisymmetric Yield

The majority of the modifications to the original code were made to allow calculation of a failure pressure for this mode. The beginning code provided a required diving depth and therefore a pressure to withstand. It then performed a von Mises stress analysis on the structure, resulting with a shell stress. This shell stress (after modification by a safety factor) was then

compared to the yield strength of the material for acceptability. The code was modified to iterate on the pressure, with the failure pressure designated as the pressure at which the calculated stress was equal to the yield stress (without any modifications by safety factors). There was no distinct equation for the failure pressure. The following is the code used to determine $\sigma_{SY}$, which is the shell stress.

$$B := \frac{t_w \cdot t_p}{A + t_w \cdot t_p}$$ Area ratio

$$\theta := L_f \cdot \left[ \frac{3 \cdot \left(1 - \nu^2\right)}{\left(R \cdot t_p\right)^2} \right]^{\frac{1}{4}}$$ Slenderness Parameter

$$N := \frac{\cosh(\theta) - \cos(\theta)}{\sinh(\theta) + \sin(\theta)}$$ Deflection coefficient

$$\beta := \frac{2 \cdot N}{A + t_w \cdot t_p} \cdot \left[ \frac{1}{3 \cdot \left(1 - \nu^2\right)} \right]^{0.25} \cdot \sqrt{R \cdot t_p^{\,3}}$$ Frame flexibility parameter

$$\Gamma := \frac{\left(1 - \frac{\nu}{2}\right) - B}{1 + \beta}$$ Frame deflection parameter

$$H_M := -2 \cdot \frac{\sinh\left(\frac{\theta}{2}\right) \cdot \cos\left(\frac{\theta}{2}\right) + \cosh\left(\frac{\theta}{2}\right) \cdot \sin\left(\frac{\theta}{2}\right)}{\sinh(\theta) + \sin(\theta)}$$ Bending effect (mem)

$$H_E := -2 \cdot \left( \frac{3}{1 - \nu^2} \right)^{0.5} \cdot \frac{\sinh\left(\frac{\theta}{2}\right) \cdot \cos\left(\frac{\theta}{2}\right) - \cosh\left(\frac{\theta}{2}\right) \cdot \sin\left(\frac{\theta}{2}\right)}{\sinh(\theta) + \sin(\theta)}$$ Bending effect (bend)

$$K := \frac{\sinh(\theta) - \sin(\theta)}{\sinh(\theta) + \sin(\theta)}$$ Bending efffect near frame

The following begins the von Mises stress analysis.

$$\sigma_{\phi\phi so} := \frac{-P \cdot R}{t_p} \cdot \left[1 + \Gamma \cdot \left(H_M + \nu \cdot H_E\right)\right] \qquad \sigma_{\phi\phi si} := \frac{-P \cdot R}{t_p} \cdot \left[1 + \Gamma \cdot \left(H_M - \nu \cdot H_E\right)\right]$$

$$\sigma_{xxso} := \frac{-P \cdot R}{t_p} \cdot \left(0.5 + \Gamma \cdot H_E\right) \qquad \sigma_{xxsi} := \frac{-P \cdot R}{t_p} \cdot \left(0.5 - \Gamma \cdot H_E\right)$$

$$\sigma_{\phi\phi fo} := \frac{-P \cdot R}{t_p} \cdot \left[1 - \Gamma \cdot \left[1 + \nu \cdot \left(\frac{3}{1 - \nu^2}\right)^{0.5} \cdot K\right]\right] \qquad \sigma_{\phi\phi fi} := \frac{-P \cdot R}{t_p} \cdot \left[1 - \Gamma \cdot \left[1 - \nu \cdot \left(\frac{3}{1 - \nu^2}\right)^{0.5} \cdot K\right]\right]$$

$$\sigma_{xxfo} := \frac{-P \cdot R}{t_p} \cdot \left[0.5 - \Gamma \cdot \left(\frac{3}{1 - \nu^2}\right)^{0.5} \cdot K\right] \qquad \sigma_{xxfi} := \frac{-P \cdot R}{t_p} \cdot \left[0.5 + \Gamma \cdot \left(\frac{3}{1 - \nu^2}\right)^{0.5} \cdot K\right]$$

$$\sigma_{sy} := \begin{pmatrix} \sigma_{\phi\phi so} \\ \sigma_{\phi\phi si} \\ \sigma_{xxso} \\ \sigma_{xxsi} \\ \sigma_{\phi\phi fo} \\ \sigma_{\phi\phi fi} \\ \sigma_{xxfo} \\ \sigma_{xxfi} \end{pmatrix} \qquad \sigma_1 := \sigma_{sy_0} \qquad \sigma_2 := \sigma_{sy_2} \qquad \sigma_3 := \sigma_{sy_5} \qquad \sigma_4 := \sigma_{sy_7}$$

$$\sigma_{SYM} := \left(\sigma_1^2 - \sigma_1 \cdot \sigma_2 + \sigma_2^2\right)^{\frac{1}{2}} \qquad \sigma_{SYF} := \left(\sigma_3^2 - \sigma_3 \cdot \sigma_4 + \sigma_4^2\right)^{\frac{1}{2}}$$

$$\sigma_{SY} := \max\begin{pmatrix} \sigma_{SYM} \\ \sigma_{SYF} \end{pmatrix}$$

### 4.4.2 Asymmetric Buckling

The equation for lobar bucking is the same as that used by SNAME and ABS and the analytic solution; it is the Widenburg approximation:

$$P_{cLB} := \frac{2.42 \cdot E \cdot \left(\frac{t_p}{D}\right)^{2.5}}{\left(\frac{L_f}{D} - 0.45 \cdot \sqrt{\frac{t_p}{D}}\right) \cdot \left(1 - \nu^2\right)^{0.75}} \tag{21}$$

### 4.4.3 General Instability

For general instability, the Bryant equation is used with the effective length of shell given by the following method:

$L_{eff} := L_c \cdot F_1 + t_w$

Where

$L_c := L_f - t_w$ is defined as the clear length between the mid-bay and the stiffener

$$F_1 := \frac{4}{\theta} \cdot \left| \frac{\cosh(n_1 \cdot \theta)^2 - \cos(n_2 \cdot \theta)^2}{\frac{\cosh(n_1 \cdot \theta) \cdot \sinh(n_1 \cdot \theta)}{n_1} + \frac{\cos(n_2 \cdot \theta) \cdot \sin(n_2 \cdot \theta)}{n_2}} \right|$$

$n_1 := 0.5 \cdot \sqrt{1 - \gamma}$ $\qquad$ $n_2 := 0.5 \cdot \sqrt{1 + \gamma}$

$$\gamma := \frac{P}{2 \cdot E} \cdot \left(\frac{R}{t_p}\right)^2 \cdot \sqrt{3 \cdot \left(1 - \nu^2\right)}$$

$F_1$ is the first transcendental equation determined by Pulos and Salerno. The original methodology required the pressure as an input to first determine the $\theta$ function (it is the same as for axisymmetric yield) and then $F_1$ was found. To provide for a simpler method, a series of pressures that encompassed the predicted range of failure were input into the above equations and an average value of $F_1$ was chosen from the resultant values. The $F_1$ values changed by approximately $\pm$ 0.05 for each test cylinder. The effective length was then used to calculate the moment of inertia for the combined shell and stiffener. The number of lobes was set to be

between 2 and 4; the failure pressure was then found without other modifications to the Bryant formula.

$$P_{cGI_i} := \frac{E \cdot t_p}{R} \cdot \frac{m^4}{\left[\left(n_i\right)^2 - 1 + \frac{m^2}{2}\right] \cdot \left[\left(n_i\right)^2 + m^2\right]^2} + \frac{\left[\left(n_i\right)^2 - 1\right] \cdot E \cdot I_{eff}}{R^3 \cdot L_f} \tag{22}$$

Where:

$$m := \pi \cdot \frac{R}{L_s}$$

# Chapter 5: Experimental Results

The various Classification Societies' design rules were tested against data collected from experiments conducted by the U. S. Navy in support of submarine design. Each society's design rules were used to determine the failure pressure and failure mode of each of the test cylinders. The resulting predictions were then compared to the experimental results. Of primary interest was agreement between the design rule prediction and experiment on the mode of failure, followed by the closeness of the predicted failure pressure to the actual collapse pressure.

## 5.1 NAVSEA Test Cylinders

The test data was provided by the Naval Sea Systems Command submarine structures unit (SEA 05P2). Four test cylinders were selected that covered the range of examined failure modes. The cylinder diameter to thickness ratios (D/t) fell between 112 to 198, modeling typical submarine D/t ratios. Two of the cylinders had internal stiffeners while the other two cylinders had external stiffeners. All four test cylinders had built-up end stiffeners with a combination of slightly different spacing and / or larger stiffener dimensions than the uniform field stiffeners. These end stiffeners were designed to prevent shell yielding in the end bays due to increased stress levels associated with the boundary conditions. It was estimated that without the end stiffeners a 4-5% reduction in axisymmetric yielding pressure could occur. None of the end stiffeners met the classification societies' requirement for a "deep" stiffener. None of the design rule codes allowed for these variable stiffeners, therefore the non-uniformities were disregarded and the end stiffeners treated as field stiffeners. The four cylinders are described below.

### 5.1.1 Cylinder 1.d

Cylinder 1.d was a machined cylindrical shell with rectangular external ring stiffeners. The material was high strength steel with a yield strength of 80,000 psi. Figure 5 shows the schematic of the cylinder. The boundary conditions consisted of one end being fully fixed; the other end had all freedoms fixed except for axial displacement (these conditions conflict with the design rules assumption of completely clamped ends). External hydrostatic pressure was applied including axial line load to simulate load on the end plate. The experiment tested the ability of the design rules to predict elastic shell bucking (Lobar buckling). The experimentally determined collapse pressure was 633 psi with failure by asymmetric (Lobar) buckling. Appendix A has the analysis of predicted failure for this cylinder.

**Figure 5: Test Cylinder 1.d Schematic**

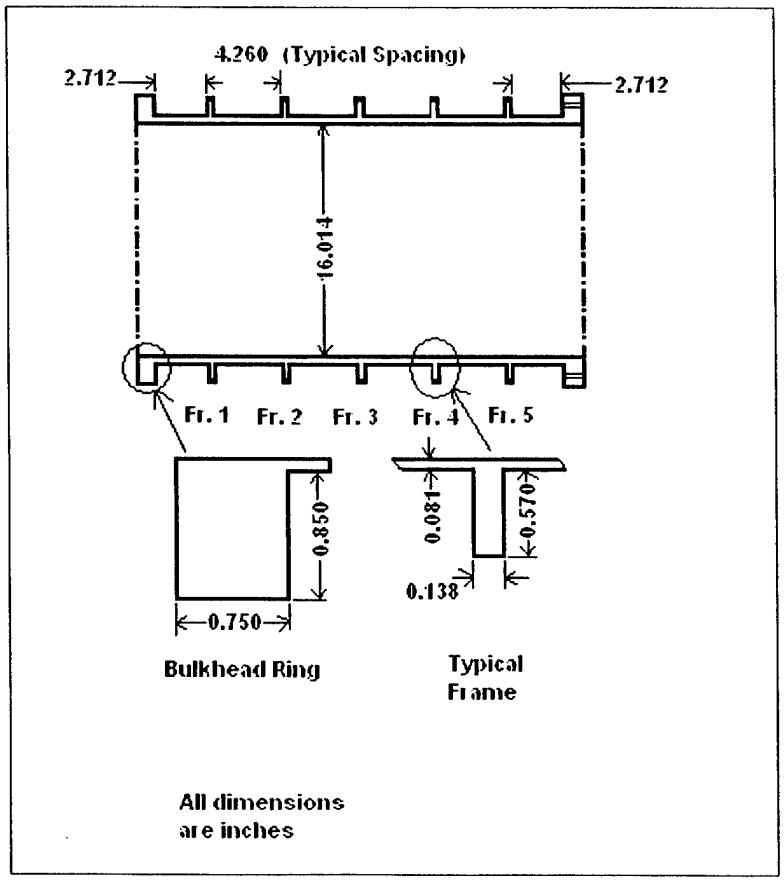

### 5.1.2 Cylinder 1.f

Cylinder 1.f was a cylindrical shell with internal tee stiffeners of welded construction. The material was high strength steel with a yield strength of 98,500 psi. The boundary conditions consisted of 4.0 inch steel plates attached with full fixity to the end of the adaptor ring on the model. External hydrostatic pressure was applied. This test cylinder was used to predict failure by elastic general instability. There was no experimental elastic collapse pressure; therefore the critical pressure was calculated by two separate, reliable analysis programs with the results being 4858 psi (with 3 waves) and 4953 psi (with 3 waves). The test cylinder actually failed by inelastic general instability at a pressure of 2200 psi. Figure 6 shows the cylinder dimensions and Appendix B has the analysis of predicted failure for this cylinder.

**Figure 6: Test Cylinder 1.f Schematic**

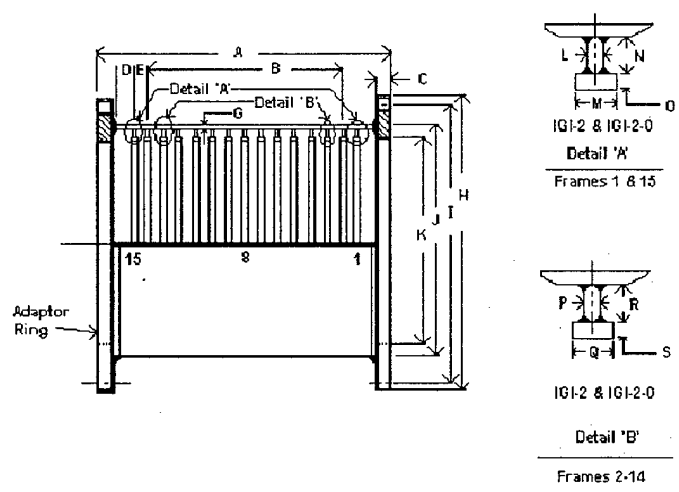


TABLE OF DIMENSIONS (inches)

| A | B | C | D | E | F | G | H | I | J | K | L | M | N | P | Q | R | S |
|---|---|---|---|---|---|---|---|---|---|---|---|---|---|---|---|---|---|
| | | | | | | | | | | | | | | | | | |
| 45.655 | 31.987 | — | 2.740 | 2.331 | — | 0.263 | — | — | 31.92 | — | 0.265 | 0.905 | 0.263 | 0.198 | 0.763 | 0.762 | 0.263 |

### 5.1.3 Cylinder 2.a

Cylinder 2.a was a machined cylindrical shell with external tee stiffeners. The material was high strength steel with a yield strength 65,500 psi. Figure 7 shows the schematic of the cylinder. The boundary conditions consisted of end closures made of 3.0 inch steel plates attached to the idealized adaptor ring with full fixity. External uniform hydrostatic pressure was applied to the model. This cylinder was used by the Navy to predict end bay failure (shell collapse influenced by end bay design). This is a specific example of axisymmetric buckling and was used as the axisymmetric model for the classification society rules. The experimental collapse pressure was found to be 921 psi by axisymmetric collapse in the second bay from the adaptor ring. Appendix C has the analysis of predicted failure for this cylinder.

**Figure 7: Test Cylinder 2.a Schematic**

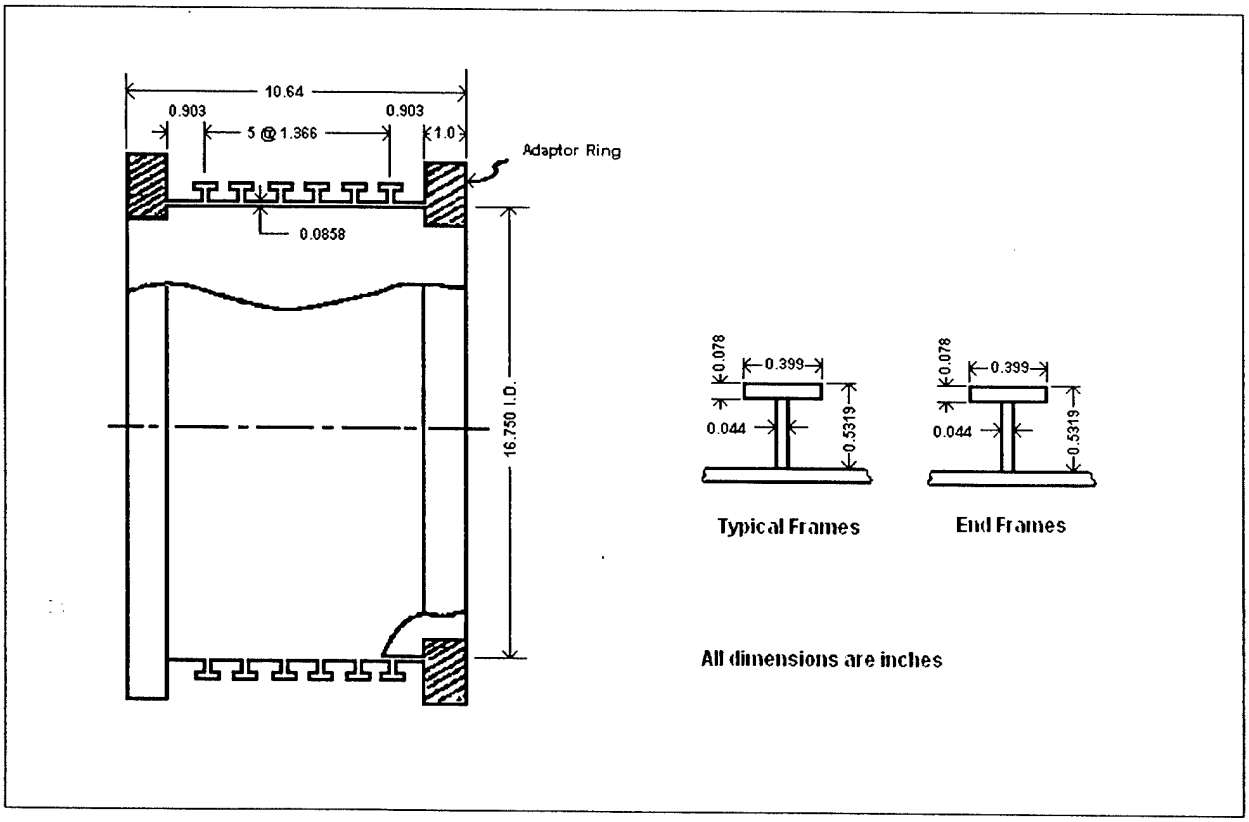

### 5.1.4 Cylinder 2.c

Cylinder 2.c was a fabricated cylinder with internal ring stiffeners. The base material was high strength steel with a yield strength of 157,000 psi. Figure 8 shows the schematic of the cylinder. The shell was cold rolled and fabricated with a deliberate out-of-roundness imperfection. The frames were built-up. The frame web material was base metal, and the frame flanges were cold rolled. The boundary conditions consisted of one end being fully fixed with the other end having all freedoms except axial displacement. External uniform hydrostatic pressure with an axial end load to simulate end plate loading was applied. This test cylinder was used by NAVSEA to predict the inelastic general instability failure mode and to model out-of-roundness imperfections. In the current comparison the out-of-roundness was disregarded. The collapse pressure was experimentally found to be 3640 psi in 2 circumferential waves in an inelastic general instability mode. Appendix D has the analysis of predicted failure for this cylinder.

**Figure 8: Test Cylinder 2.c Schematic**

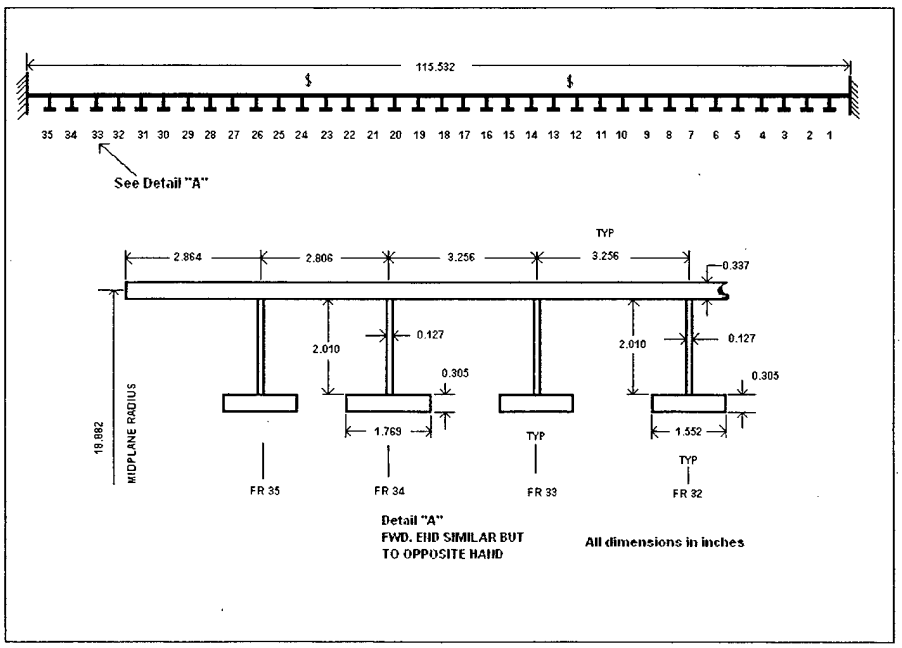

## 5.2 Calculation to Experiment Comparison

Table 1 shows the comparison of the classification societies' design rules to the experimental results. The table displays the calculated failure pressure and failure mode for each cylinder and the percent difference from the experimental failure pressure (if the experimental and calculated failure modes are the same).

**Table 1: Comparison of Design Rule Calculations to Experimental Results**

| | 1.d | | 1.f | | 2.a | | 2.c | |
|---|---|---|---|---|---|---|---|---|
| | Pressure | Mode | Pressure | Mode | Pressure | Mode | Pressure | Mode |
| NAVSEA EPERIMENT | 633<br>--- | L | 2200<br>--- | iGI | 921<br>--- | AX | 3640<br>--- | iGI |
| Analytic Solution | 605<br>-4.6% | L | 2141 | AX | 876<br>-5.1% | AX | 4080 | AX |
| ABS | 605<br>-4.6% | L | 2039 | AX | 844<br>-8.8% | AX | 4211 | AX |
| PNA | 605<br>-4.6% | L | 1928 | AX | 815<br>-12.1% | AX | 3864 | AX |
| Germanischer Lloyd | 606<br>-4.5% | L | 2931 | AX | 1030<br>12.4% | AX | 4567 | AX |
| 13A Professional Summer | 605<br>-4.6% | L | 1994 | AX | 819<br>-11.6% | AX | 3712 | AX |

Key:

| | |
|---|---|
| L | Asymmetric (Lobar) Buckling |
| AX | Axisymmetric Yielding |
| GI | General Instability |
| e/i | elastic / inelastic |

There is excellent agreement between the experimental data and the calculations for cylinder 1.d. The Lobar buckling failure was expected as the slenderness ratio was 201, several magnitudes greater than the breakpoint of 1.14 between asymmetric and axisymmetric failure. The agreement between the design rules and the analytic solution calculations was expected as they all used the same formula to determine the lobar buckling pressure. The calculated failure pressure was 4% below the experimental pressure. The higher experimental critical pressure was attributable to the test cylinder being more fully clamped than theorized in the design rules.

Cylinder 2.a also generated agreement between the experimental data and the design rule calculations. The predicted failure mode of axisymmetric yield was confirmed by the experiment. However there were some significant differences between the predicted collapse pressure and the experimental failure pressure. All of the design rules, except for the Germanischer Lloyd, predicted failure at a pressure lower than that experimentally found. The Germanischer Lloyd calculation over estimated the failure pressure and was the furthest from the experimental pressure with a pressure 11.8% over the experimental pressure. This failure mode is the most dependent upon the yield strength of the material therefore a small variance between the given yield strength and the actual yield strength of the test specimen may have contributed to the differing pressures predicted by the design rules. All of the design rules use a simplified version of the methodology presented by Pulos and Salerno [7]. The Germanischer Lloyd and the modified Professional Summer calculations, perform an iterative operation to find the pressure, very close to the analytic methodology. The ABS and PNA calculations use single value equations substituted for the transcendental functions of the analytic solution.

Cylinder 1.f failed at 2200 psi experimentally in an inelastic general instability mode. The experiment was done to test the ability of NAVSEA's computer codes to predict elastic general instability. A predicted failure pressure of 4858 psi was determined for the elastic general instability mode. The design rule codes estimated the general instability failure pressure very well. Table 2 compares the design rules and analytic solution general instability pressures to the experimental failure pressure. The agreement between the design rules was expected as they all use the Bryant equation (equation 10) to determine the failure pressure. The only differences come from the variations in the effective length of the shell for the combined shell and stiffener calculations and small variations in the radius used in the equation.

Of further interest to cylinder 1.f was that the design rules predicted failure by axisymmetric yielding at an average of 2206 psi.. As the cylinder actually failed by inelastic general instability the design code predictions indicate that the two modes of failure are very close together. This cylinder was very close to failure in multiple modes at approximately the same pressure (i.e. an identical cylinder of the same dimensions and material may have failed by axisymmetric yielding vice the general instability depending on the eccentricity of the cylinder and other small defects). This multiple failure mode condition must be guarded against in real designs, usually by applying different safety factors to the various modes. [1]

**Table 2: Cylinder1.f Elastic General Instability Failure Pressures**

| DESIGN RULE | FAILURE PRESSURE (PSI) | % FROM EXPERIMENT | LOBES |
|---|---|---|---|
| Experiment | 4858 | --- | 3 |
| Analytic Solution | 4496 | -7.5 | 3 |
| ABS | 4496 | -7.5 | 3 |
| PNA | 4496 | -7.5 | 3 |
| Germanischer Lloyd | 4651 | -4.3 | 3 |
| 13A PS | 4460 | -8.2 | 3 |

Cylinder 2.c failed at 3640 psi in an inelastic general instability mode with 2 circumferential waves. However the design rule calculations all predicted failure by axisymmetric yielding at an average pressure of 4086 psi. For this cylinder the design rule codes were not close in predicting the elastic general instability failure pressure. This large overestimation of the failure pressure can be attributed to the assumption of perfect circularity in the design codes, whereas the experimental model had a two-wave sinusoidal imperfection of maximum height of $\pm$ 0.105 inches. This deliberate out-of-roundness would significantly reduce the resistance to buckling. Table 3 compares the design rules / analytic solution to the experimental failure pressure.

From Table 3, the axisymmetric failure pressures were higher than the actual failure pressure but all were within 16% of the experimental result. This closeness between the failure modes resembles the results for cylinder 1.f. Further study may be warranted to explore connections between axisymmetric yield and inelastic general instability.

**Table 3: Cylinder 2.c Elastic General Instability Failure Pressures**

| DESIGN RULE | FAILURE PRESSURE (PSI) | % FROM EXPERIMENT | LOBES |
|---|---|---|---|
| Experiment | 3640 | --- | 2 |
| Analytic Solution | 8642 | 137.4 | 2 |
| ABS | 8642 | 137.4 | 2 |
| PNA | 8642 | 137.4 | 2 |
| Germanischer Lloyd | 9702 | 166.5 | 2 |
| 13A PS | 8536 | 134.5 | 2 |

This page intentionally left blank

# Chapter 6: Conclusions

The classification society design rules studied are important tools for engineers and naval architects designing and studying cylindrical structures subjected to external hydrostatic pressure. The engineer must have confidence that the design code used will provide acceptable (safe) calculations for his or her structure. This confidence can be assured by comparison of the calculated failure pressure and mode to that found from experiments. This thesis attempted to provide that comparison for several of the most used design rules along with a comparison of the analytical solution upon which most the design rules are at least partly based.

## 6.1 Comparative Analysis Review

As discussed in Chapter 5, the design rules had mixed results in correctly predicting the failure mode and failure pressure of the test cylinders. In general all of the design rules and the analytic solution were in agreement for the specific geometries. For the test cases of failure by axisymmetric yielding and lobar buckling, the calculated pressures were accurate when compared against the experimental results. However for the two cylinders that experimentally failed by general instability, all of the design codes predicted failure by axisymmetric yielding vice the general instability. The design rules only account for elastic general instability which will occur at a higher pressure than the inelastic general instability. For cylinder 1.f the design codes calculation of the elastic general instability mode failure pressure was very accurate, but for cylinder 2.c the calculated failure pressures were all greater than 100% over the experimental pressure. The majority of the pressure differentials for 2.c can be attributed to the built-in non-circularity in the test cylinder.

## 6.2 Agreements and Differences

In this thesis there were thirty failure pressures calculated (five failures for each of four test cylinders and five general instability pressures each for the two cylinders that failed by general instability) with design rule / analytic solution agreement on 33% of the pressures. The other twenty pressure calculations varied from over 30% to less than 1% different.

The pressure calculations that were in agreement were generated from the use of the same equation and same dimensions for most of the asymmetric buckling and elastic general instability calculations. For the asymmetric buckling predictions, ABS, PNA, and the MIT 13A Professional Summer calculations use the same equation as the analytic solution. This equation was independent of the number of circumferential lobes in the failed part of the shell. For the general instability cases, the ABS and PNA calculations agreed with the analytic solution. These three codes used the same effective length ($L_e$ = frame spacing) and the assumption that the radius of the combined shell and stiffener was the mid-plane radius of the shell.

The difference between calculations can be accounted for individually: The Germanischer Lloyd code for asymmetric buckling used an iterative process that was dependent of the number of lobes in the failed cylinder; however the failure pressure was still within a tenth of a percent of the other calculations. The predictions for elastic general instability were also generally close. The Germanischer Lloyd and MIT 13A Professional Summer codes used different assumptions for $L_e$ than the other codes, which gave predicted failure pressures slightly different than the base general instability equation (equation 10). The largest variations between the codes were generated for the axisymmetric yield mode. All of the codes used simplified variations the analytic solution developed by Pulos and Salerno. These variations in the shell yielding pressure come about due to the different simplifications made in the codes.

## 6.3 Applications of the Models

The various design rules studied are promulgated to ensure safe design of cylinders for use under external pressure conditions. This safe operation requires an almost absolute certainty that the design will not fail under the worst anticipated condition (many theories and practices exist on risk based design and the use of safety factors). The comparison of the design rules to an analytic solution, analysis tools (MIT 13A Professional Summer and SNAME), and to experimental results allows a designer to have a good idea of how a particular cylinder design would be evaluated by each entity. This comparison ability would be useful in judging the initial feasibility of a design and also would be useful in applications where a design would be subject to more than one classification society.

The comparisons in this thesis should in no way be used as a detailed design tool for the subject cylinders. After an initial design is compared and judged to be adequate, much more rigorous analyses must be used to ensure a safe design. These advanced analyses should include finite element methodology and other tools that can look at local stresses instead of generalized stresses in the shell. These higher order analysis tools can account for material differences, geometric eccentricities (out-of-roundness and other along the shell), varied spacing and sizes of stiffeners, and actual construction factors such as heat effected zones around welds, and bulkhead effects. Another important area that is addressed by other parts of the design rules but not studied here is that of shell penetrations. These discontinuities in the shell are very susceptible to stress concentration and must be reinforced to prevent failure at pressures lower than that predicted for a continuous shell.

## 6.4 Further Areas of Study

There are several areas that require further research to completely understand the result of the above analysis. The area most evident in need of more study is the failure of the cylinders by inelastic general instability. While some work has been accomplished on this phenomenon, most of the work is either classified by government entities or is empirical data. As part of the research into the inelastic general instability should be a detailed analysis of interactions / relationships with axisymmetric yield. As found from the experimental cylinders that failed by inelastic general instability, the design codes and analytic solution predicted failure by axisymmetric yield of the shell at pressures close to the actual failure pressures. These comparisons suggest that at least the two modes are very close together and may have some interaction.

There are many other classification societies that produce design rules for stiffened cylinders and other geometries. These societies include the American Petroleum Institute (API), NORSOK and Det Norske Veritas (Norway), Lloyd's Register (United Kingdom), Registro Italiano Navale Group (RINA) (Italy) and several others. These additional design rules could be compared against the existing test cylinders as well as all of the design rules should be compared against more experimental data.

Finally, the base methodology can be expanded to include other geometries such as spheres, hemi-spheres, cones and toroids. The classification societies address most of these forms which can be found as the end closures for most submersibles and other pressure vessels. These more complex geometries present more challenging analytic solutions and are in general harder to manufacture. Experimental data is scarcer; therefore finite element models may be needed to generate comparisons.

# References

[1] Society of Naval Architects and Marine Engineers. 1967. *Principles of Naval Architecture*. New York: The Society of Naval Architects and Marine Engineers.

[2] American Bureau of Shipping. 1990. *Rules for Building and Classing Underwater Vehicles, Systems and Hyperbaric Facilities*. New York: American Bureau of Shipping

[3] Germanischer Lloyd. 1988. *Rules for Underwater Technology*. Hamburg: Germanischer Lloyd

[4] Society of Naval Architects and Marine Engineers. 1990. *Submersible Vehicle Systems Design*. Jersey City: The Society of Naval Architects and Marine Engineers.

[5] Massachusetts Institute of Technology Program 13A Professional Summer. 2001. *Submarine Design Trends*. Unpublished

[6] Nash, William A. 1995. *Hydrostatically Loaded Structures: The Structural Mechanics, Analysis and Design of Powered Submersibles.* Tarrytown: Pergamon Press.

[7] Pulos, J.G., and Salerno, V.L. 1961. *Axisymmetric Elastic Deformations and Stresses in a Ring-Stiffened, Perfectly Circular Cylindrical Shell Under External Hydrostatic Pressure*. David Taylor Model Basin Report 1497.

[8] Kendrick, S. 1965. The Buckling Under External Pressure of Ring Stiffened Circular Cylinders. In *Transactions of The Royal Institution of Naval Architects* VMl-15 v107 139-156. United Kingdom: Royal Institution of Naval Architects.

[9] Ross, C. T. F. 1965. The Collapse of Ring-Reinforced Cylinders Under Uniform External Pressure. In *Transactions of The Royal Institution of Naval Architects* VMl-15 v107 375-394. United Kingdom: Royal Institution of Naval Architects.

[10] Avallone, Eugene A. ed. and Theodore Baumeister III, ed. 1996. *Marks' Standard Handbook for Mechanical Engineers*. New York: McGraw-Hill.

[11] Will, William. 2002. Private Conversations. Washington, D.C.

This page intentionally left blank

# Appendix A: Codes for Test Cylinder 1.d

## AMERICAN BUREAU OF SHIPPING

Rules for Building and Classing Underwater Vehicles,

Systems, and Hyperbaric Facilities

### Definitions

$ksi := 1000psi$

$E := 30000ksi$ Modulus of Elasticity

$\nu := 0.3$ Poisson's Ratio

$\sigma_y := 80000psi$ Yield strength

### Shell Parameters

$L_s := 4.266in$ Distance between stiffeners

$L_c = 22.488in$ Distance between bulkheads

$R = 8.007in$ Mean radius of shell

$t = 0.081in$ Thickness of shell

$R_o := R + \frac{t}{2}$ Outer radius of shell

$D_o := 2 \cdot R_o$ Outer Diameter of shell

### Ring Stiffeners

$t_w := 0.138in$ thickness of web of ring stiffener

$depth := 0.57in$ height of ring stiffener

$b := t_w$ faying width of stiffener (from P&S for I beam stiffener)

$bf := 0.0in$ breadth of ring stiffener

$b_2 := bf - t_w$ breadth of ring stiffener minus the web thickness

$d := 0.0in$ ring stiffener flange thickness

$L_b := L_s - t_w$ Unsupported spacing between stiffeners

$L := \max(L_s, L_b)$

$L = 4.266in$

$c_1 := .5 \cdot \left( \frac{t_w \cdot depth^2 + b_2 \cdot d^2}{t_w \cdot depth + b_2 \cdot d} \right)$ first centroidal height of ring stiffener

$c_1 = 0.285in$

$c_2 := depth - c_1$ second centroidal height of ring stiffener

$c_2 = 0.285in$

$h := c_1 - d$ distance from centroid of ring stiffener to nearest edge of flange

$R_s := R + .5 \cdot t + c_2$ radius to centroid of ring stiffener

$R_s = 8.332in$

$A_s := (t_w \cdot depth + b_2 \cdot d)$ cross-sectional area of ring stiffener

$A_s = 0.079in^2$

$I_r := \left(\frac{1}{3}\right) \cdot \left(bf \cdot c_1^3 - b_2 \cdot h^3 + t_w \cdot c_2^3\right)$ moment of inertia of ring stiffener about its centroidal axis

$I_r = 2.13 \times 10^{-3} in^4$

$R_f := R + .5 \cdot t + depth$ Radius to tip of the stiffener

$R_f = 8.617in$

**Combined Plate and Ring Stiffener**

$L_e := \min \begin{pmatrix} 1.5 \cdot \sqrt{R \cdot t} \\ 0.75 \cdot L_s \end{pmatrix}$ effective length of shell plate

$L_e = 1.208in$

$A_p := L \cdot t$ area of effective plate

$A_{sp} := A_p + A_s$ area of plate and ring stiffener

$H_c := depth + t$ height of combined plate and ring stiffener

$H_c = 0.054ft$

$B_1 := L - t_w$ plate length minus the web thickness

$$c_{1c} := .5\left[\frac{t_w \cdot H_c^2 + B_1 \cdot t^2 + b_2 \cdot d \cdot (2 \cdot H_c - d)}{t_w \cdot H_c + B_1 \cdot t + d \cdot b_2}\right]$$

neutral axis of combined plate and ring stiffener from outer fiber of plate ($R_0$)

$c_{1c} = 0.101in$

$R_c := R - .5 \cdot t + c_{1c}$ radius to centroidal axis of combined ring stiffener and shell

$R_c = 8.067in$

$$I_e := \frac{1}{3} \cdot \left[L \cdot c_{1c}^3 - B_1 \cdot (c_{1c} - t)^3 + bf \cdot (H_c - c_{1c})^3 - (bf - t_w) \cdot (H_c - c_{1c} - d)^3\right]$$

moment of inertia of combined plate and shell

$I_e = 0.009in^4$

**General Equations**

$$M := \frac{L}{\sqrt{R \cdot t}}$$

$M = 5.297$

$$\theta := \left[3 \cdot (1 - \nu^2)\right]^{\frac{1}{4}} \cdot M$$

$\theta = 6.809$

$$Q := \frac{\theta}{2}$$

$Q = 3.405$

$$N := \frac{\cosh(2 \cdot Q) - \cos(2 \cdot Q)}{\sinh(2 \cdot Q) + \sin(2 \cdot Q)}$$

$N = 0.997$

$$G := 2 \cdot \frac{(\sinh(Q) \cdot \cos(Q) + \cosh(Q) \cdot \sin(Q))}{\sinh(2 \cdot Q) + \sin(2 \cdot Q)}$$

$G = -0.081$

$$H := \frac{\sinh(2Q) - \sin(2 \cdot Q)}{\sinh(2 \cdot Q) + \sin(2Q)}$$

$H = 0.998$

**Inter-Stiffener Strength (6.19.1)**

1) Inter-stiffener strength equations

<u>This equates to axisymmetric buckling</u>

$$A := A_s \cdot \left(\frac{R}{R_s}\right)^2$$ Effective area of plate and stiffener (External stiffeners)

$A = 0.073 in^2$

$$F := \frac{A \cdot \left(1 - \frac{\nu}{2}\right) \cdot G}{A + t_w \cdot t + \frac{2N \cdot t \cdot L}{\theta}}$$

$F = -0.027$

$$P_y := \frac{\sigma_y \cdot \frac{t}{R}}{1 - F}$$ yield pressure at midbay and midplane of cylinder

$P_y = 787.9\text{psi}$

<u>This corresponds to Lobar buckling</u>

$$P_m := \frac{2.42 \cdot E \cdot \left(\frac{t}{2 \cdot R}\right)^{\frac{5}{2}}}{\left(1 - \nu^2\right)^{\frac{3}{4}} \cdot \left[\frac{L}{2 \cdot R} - 0.45 \cdot \left(\frac{t}{2 \cdot R}\right)^{\frac{1}{2}}\right]}$$ von Mises buckling pressure for a cylinder

$P_m = 604.9\text{psi}$

Maximum allowable working pressure for inter-stiffener strength

$$P_c := \begin{cases} \frac{P_m}{2} & \text{if } \frac{P_m}{P_y} \le 1 \\ P_y \cdot \left(1 - \frac{P_y}{2 \cdot P_m}\right) & \text{if } 1 < \frac{P_m}{P_y} \le 3 \\ \frac{5}{6} \cdot P_y & \text{if } \frac{P_m}{P_y} > 3 \end{cases}$$

$\frac{P_m}{P_y} = 0.768$

$P_c = 302.4\text{psi}$

$P_{aits} := P_c \cdot .8$

$P_{aits} = 242\text{psi}$

2) longitudinal stress

Limiting pressure corresponding to the longitudinal stress at stiffeners reaching yield. No direct correlation to major failure modes

$$\gamma := \frac{A\cdot\left(1-\frac{\nu}{2}\right)}{A + t_w\cdot t + \frac{2\cdot N\cdot t\cdot L}{\theta}}$$

$$P_l := \frac{2\cdot\sigma_y\cdot t}{R}\cdot\left[1+\left(\frac{12}{1-\nu^2}\right)^{\frac{1}{2}}\cdot\gamma\cdot H\right]^{-1}$$

$P_l = 732.7\text{psi}$

$P_{als} := P_l\cdot .67$ Maximum allowable working pressure for longitudinal stress

$P_{als} = 490.88\text{psi}$

**b Overall Buckling Strength (6.19.5)**

$$\lambda := \frac{\pi\cdot R}{L_c}$$

$n := 1$

$$A_2(n) := n^2 - 1$$

$$A_1(n) := \frac{\lambda^4}{\left(A_2(n)+\frac{\lambda^2}{2}\right)\cdot\left(n^2+\lambda^2\right)^2}$$

$$p_{n1}(n) := \frac{E\cdot t}{R}\cdot A_1(n) + \frac{E\cdot I_e\cdot A_2(n)}{R^3\cdot L}$$

Given

$n \geq 2$

$n_2 := \text{Minimize}(p_{n1}, n)$

$n_2 = 3.109$

n must be an integer

$n_{2int} := \text{round}(n_2, 0)$

$n_{2int} = 3$

$$n_{2first} := \begin{cases} n_{2int} \cdot 100 & \text{if } n_{2int} = 1 \\ n_{2int} - 1 & \text{otherwise} \end{cases}$$

$n_{2first} = 2$

$$n_{2prime} := \begin{pmatrix} n_{2first} \\ n_{2int} \\ n_{2int} + 1 \\ n_{2int} + 2 \end{pmatrix}$$

$n_{2prime_1} = 3$

$$p_{n2} := \begin{pmatrix} p_{n1}(n_{2prime_0}) \\ p_{n1}(n_{2prime_1}) \\ p_{n1}(n_{2prime_2}) \\ p_{n1}(n_{2prime_3}) \end{pmatrix}$$

$$p_{n2} = \begin{pmatrix} 5.127 \times 10^3 \\ 1.522 \times 10^3 \\ 1.974 \times 10^3 \\ 3.022 \times 10^3 \end{pmatrix} \text{psi}$$

$p_n := \min(p_{n2})$

$p_n = 1522.3psi$

$P_{aol} := p_n \cdot .5$

$P_{aol} = 761.131psi$

**Summary**

Axisymmetric Buckling

$P_y = 787.9psi$

Lobar Buckling

$P_m = 604.9psi$

General Instability

$p_n = 1522.3psi$

$n_{2int} = 3$

## Germanischer Lloyd

1988 Edition

Chapter 2 - Submersibles

$MPa := 10^6 Pa$ $\qquad$ $ksi := 10^3 psi$

### General Definitions

$E := 30000 ksi$

$L_1 := 4.266 in$ stiffener spacing

$L_3 := 22.488 in$ length of cylinder between bulkheads or lines of support

$s := .081 in$ thickness of shell

$R := 8.007 in$ radius to centerline of shell

$\nu := 0.3$ Poisson's Ratio

$k := 80 \cdot ksi$ minimum yield stress of material

### Stiffener Dimensions

$e_f := 0.0 in$ flange thickness

$d_f := 0.0 in$ width of flange from web to edge of flange

$b_2 := 2 \cdot d_f$

$d_w := 0.57 in$ Height of web

$e_w := 0.138 in$ web thickness

$b := e_w$ width of stiffener ring in contact with shell

$A_1 := e_f \cdot (e_w + 2 \cdot d_f) + e_w \cdot d_w$ cross-sectional area of stiffener ring

$A_1 = 0.079 in^2$

$H_{stiff} := d_w + e_f$

$H_{stiff} = 0.57in$

$$c_1 := \frac{1}{2} \cdot \frac{e_w \cdot H_{stiff}^2 + b_2 \cdot e_f^2}{e_w \cdot H_{stiff} + b_2 \cdot e_f}$$

$c_1 = 0.285in$

$c_2 := H_{stiff} - c_1$

$c_2 = 0.285in$

$h_2 := c_1 - e_f$

$h_2 = 0.285in$

$I_1 := \left(\frac{1}{3}\right) \cdot \left[\left(e_w + 2 \cdot d_f\right) \cdot c_1^3 - \left(2 \cdot d_f\right) \cdot h_2^3 + e_w \cdot c_2^3\right]$ Centroidal Moment of inertia of ring stiffener

$I_1 = 2.13 \times 10^{-3} in^4$

$e := c_2 + .5 \cdot s$ distance from stiffener centroid to center of shell

$e = 0.325in$

**Effective Stiffener and Shell**

$L_{etest} := b + \sqrt{2 \cdot R \cdot s}$

$$L_e := \begin{cases} L_{etest} & \text{if } L_{etest} \le L_1 \\ L_1 & \text{otherwise} \end{cases}$$ Effective length of shell (eqn 45a,b)

$L_e = 1.277in$

$$I_e := \frac{A_1 \cdot e^2}{1 + \frac{A_1}{L_e \cdot s}} + I_1 + \frac{L_e \cdot s^3}{12}$$ Moment of Inertia of combined plate and shell

$I_e = 6.92 \times 10^{-3} in^4$

$H_{stiffc} := H_{stiff} + s$ Total height of stiffener and plate

$H_{stiffc} = 0.651in$

$d_1 := s$

$bs_1 := L_e - e_w$

$$c_{1c} := \frac{1}{2} \cdot \frac{e_w \cdot H_{stiffc}^2 + b_2 \cdot e_f^2 + bs_1 \cdot s \cdot (2 \cdot H_{stiffc} - s)}{e_w \cdot H_{stiffc} + b_2 \cdot e_f + bs_1 \cdot s}$$

$c_{1c} = 0.47in$

$c_{2c} := H_{stiffc} - c_{1c}$

$c_{2c} = 0.181in$

$R_o := R - .5 \cdot s + c_{2c}$ radius of stiffener ring centroid including effect of $L_e$

$R_o = 8.148in$

$A := A_1 \cdot \frac{R^2}{R_o^2}$ Modified area of stiffener ring

$A = 0.076in^2$

$e_1 := c_{2c} + .5 \cdot s$

$e_1 = 0.222in$

## 2.4 Asymmetric Buckling (Lobar but not named this)

$$\lambda_1 := \frac{\pi \cdot R}{L_1}$$

$n := 2$ initial guess

$$\beta_{n1}(n) := \frac{\left[\left(\frac{n^2}{\lambda_1^2} + 1\right)^{-2} + \frac{s^2 \cdot \left(n^2 - 1 + \lambda_1^2\right)^2}{12 \cdot R^2 \cdot \left(1 - \nu^2\right)}\right]}{n^2 - 1 + .5 \cdot \lambda_1^2}$$

$$p_{n1}(n) := \frac{E \cdot s \cdot \beta_{n1}(n)}{R}$$

Given

$n \geq 2$

$n_g := \text{Minimize}(p_{n1}, n)$

$n_g = 10.612$ n must be an integer

$n_{gint} := \text{round}(n_g, 0)$

$n_{gint} = 11$

$$n_{gfirst} := \begin{cases} n_{gint} \cdot 100 & \text{if } n_{gint} = 1 \\ n_{gint} - 1 & \text{otherwise} \end{cases}$$

$n_{gfirst} = 10$

$$n_{gprime} := \begin{pmatrix} n_{gfirst} \\ n_{gint} \\ n_{gint} + 1 \\ n_{gint} + 2 \end{pmatrix} \qquad n_{gprime} = \begin{pmatrix} 10 \\ 11 \\ 12 \\ 13 \end{pmatrix}$$

$$p_{n2} := \begin{pmatrix} p_{n1}\left(n_{gprime_0}\right) \\ p_{n1}\left(n_{gprime_1}\right) \\ p_{n1}\left(n_{gprime_2}\right) \\ p_{n1}\left(n_{gprime_3}\right) \end{pmatrix}$$

$$p_{cr} := \min\left(p_{n2}\right)$$

$$p_{cr} = 605.9\text{psi}$$

### 3.3.3 General Instability

$$L := L_3$$

$$\lambda_2 := \frac{\pi \cdot R}{L}$$

$$\lambda_2 = 1.119$$

$$\beta_{n2}(n) := \frac{\lambda_2^{\,4}}{\left(n^2 - 1 + 0.5 \cdot \lambda_2^{\,2}\right) \cdot \left(n^2 + \lambda_2^{\,2}\right)^2}$$

$$p_o(n) := \frac{E \cdot s \cdot \beta_{n2}(n)}{R}$$

$$p_1(n) := \frac{\left(n^2 - 1\right) \cdot E \cdot I_e}{R_o^{\,3} \cdot L_1}$$

$$p_{n1a}(n) := p_o(n) + p_1(n)$$

$$n := 2$$

Given

$$n \geq 2$$

$$n_2 := \text{Minimize}\left(p_{n1a}, n\right)$$

$n_2 = 3.247$ n must be an integer

$n_{2int} := \mathrm{round}(n_2, 0)$

$n_{2int} = 3$

$$n_{2prime} := \begin{pmatrix} n_{2int} - 1 \\ n_{2int} \\ n_{2int} + 1 \\ n_{2int} + 2 \end{pmatrix}$$

$$p_{g2} := \begin{pmatrix} p_{n1a}(n_{2prime_0}) \\ p_{n1a}(n_{2prime_1}) \\ p_{n1a}(n_{2prime_2}) \\ p_{n1a}(n_{2prime_3}) \end{pmatrix} \qquad p_{g2} = \begin{pmatrix} 5.022\times 10^3 \\ 1.244\times 10^3 \\ 1.452\times 10^3 \\ 2.187\times 10^3 \end{pmatrix} \mathrm{psi}$$

$p_g := \min(p_{g2})$

$p_g = 1244\mathrm{psi}$

## 2.6 Symmetric Buckling (axisymmetric)

More Definitions

For Elastic-Plastic Region (Eqns are in the program)

$E_s := E$ Secant Modulus = Young's Modulus for elastic region

$E_t := E$ Tangent Modulus = Young's Modulus for elastic region

$\nu_p := \nu$ Poissons Ratio, elastic-plastic; = Poisson's ratio in elastic

$$\alpha := \sqrt[4]{\frac{3\cdot(1-\nu^2)}{s^2\cdot R^2}}$$ shape factor

$$\alpha = 0.063 \frac{1}{mm}$$

$C_5 := \alpha \cdot L_1$ calculation factor for symmetric buckling

$$C_5 = 6.809$$

$p_{ast} := \dfrac{2 \cdot s^2 \cdot E}{R^2 \cdot \sqrt{3 \cdot (1 - \nu^2)}}$ critical pressure, elastic, calculation factor

$$p_{ast} = 3716.21\,lpsi$$

$C_5 := \alpha \cdot L_1$ calculation factor for symmetric buckling

$$C_5 = 6.809$$

$$G := \frac{p}{p_{ast}}$$

$$C_6 := \frac{1}{2} \cdot \sqrt{1 - G}$$

$$C_7 := \frac{1}{2} \cdot \sqrt{1 + G}$$

$$C_8 := C_5 \cdot C_6$$

$$C_9 := C_5 \cdot C_7$$

$$F_1 := \frac{4}{C_5} \cdot \frac{\cosh(C_8)^2 - \cos(C_9)^2}{\dfrac{\cosh(C_8) \cdot \sinh(C_8)}{C_6} + \dfrac{\cos(C_9) \cdot \sin(C_9)}{C_7}}$$

$$F_2 := \frac{\dfrac{\cosh(C_8) \cdot \sin(C_9)}{C_7} + \dfrac{\sinh(C_8) \cdot \cos(C_9)}{C_6}}{\dfrac{\cosh(C_8) \cdot \sinh(C_8)}{C_6} + \dfrac{\cos(C_9) \cdot \sin(C_9)}{C_7}}$$

$$F_3 := \sqrt{\frac{3}{1-\nu^2}} \cdot \frac{\dfrac{\cos(C_9)\cdot\sin(C_9)}{C_7} - \dfrac{\cosh(C_8)\cdot\sinh(C_8)}{C_6}}{\dfrac{\cosh(C_8)\cdot\sinh(C_8)}{C_6} + \dfrac{\cos(C_9)\cdot\sin(C_9)}{C_7}}$$

$$F_4 := \sqrt{\frac{3}{1-\nu^2}} \cdot \frac{\dfrac{\cosh(C_8)\cdot\sin(C_9)}{C_7} - \dfrac{\sinh(C_8)\cdot\cos(C_9)}{C_6}}{\dfrac{\cosh(C_8)\cdot\sinh(C_8)}{C_6} + \dfrac{\cos(C_9)\cdot\sin(C_9)}{C_7}}$$

$$C_{10} := \frac{\left(1-\dfrac{\nu}{2}\right)\cdot\dfrac{A}{s\cdot L_1}}{\dfrac{A}{s\cdot L_1} + \dfrac{b}{L_1} + \left(1-\dfrac{b}{L_1}\right)\cdot F_1}$$

$$C_{11} := \sqrt{\frac{0.91}{1-\nu^2}}$$

$$\sigma_o := \frac{-p\cdot R}{s}$$

$$\sigma_x := \sigma_o\cdot\left(\frac{1}{2} + C_{10}\cdot C_{11}\cdot F_4\right)$$

$$\sigma_\phi := \sigma_o\cdot\left(1 - C_{10}\cdot F_2 + \nu\cdot C_{10}\cdot C_{11}\cdot F_4\right)$$

$$\sigma_{x1} := \sigma_o\cdot\left(\frac{1}{2} - C_{10}\cdot C_{11}\cdot F_4\right)$$

$$\sigma_x = -3.286\times 10^8\,\text{Pa}$$

$$\sigma_{\phi 1} := \sigma_o\cdot\left(1 - C_{10}\cdot F_2 - \nu\cdot C_{10}\cdot C_{11}\cdot F_4\right)$$

$$\sigma_\phi = -6.651\times 10^8\,\text{Pa}$$

$$K_o := \frac{\sigma_\phi}{\sigma_x}$$

$.8k = 64\,\text{ksi}$ Determination factor (if>.8k then must use $E_t$, $E_s$, etc)

$$\sigma_i := \sqrt{\sigma_x^{\,2} + \sigma_\phi^{\,2} - \sigma_x \cdot \sigma_\phi}$$

$$\sigma_i = 83.538\text{ksi}$$

$$\sigma := -K_o \cdot \sigma_x$$

$$\sigma = 96.5\text{ksi}$$

$$\varepsilon_1 := \frac{\sigma}{E}$$

$$\varepsilon_1 = 3.215 \times 10^{-3}$$

$$\sigma := k \cdot \left( .8 + .2 \cdot \tanh\left( 5 \cdot \frac{E}{k} \cdot \varepsilon_1 - 4 \right) \right)$$

$$\sigma = 79456\text{psi}$$

$$\varepsilon := \frac{k}{E} \cdot \left( 0.8 + 0.2 \cdot \operatorname{atanh}\left( 5 \cdot \frac{\sigma}{k} - 4 \right) \right)$$

$$\varepsilon = 3.215 \times 10^{-3}$$

$$E_s := \frac{k}{\varepsilon} \cdot \left[ 0.8 + 0.2 \cdot \left( \tanh\left( 5 \cdot \frac{E}{k} \cdot \varepsilon - 4 \right) \right)^2 \right]$$

$$E_s = 24548.31\text{ksi}$$

$$E_t := E \cdot \left( 1 - \tanh\left( 5 \cdot \frac{E}{k} \cdot \varepsilon - 4 \right) \right)$$

$$E_t = 1019.968\text{ksi}$$

$$\nu_p := \left[ \frac{1}{2} - \left( \frac{1}{2} - \nu \right) \cdot \frac{E_s}{E} \right]$$

$$\nu_p = 0.336$$

$$E \leftarrow \sqrt{E_s \cdot E_t}$$

$$p_{aa} := \frac{2 \cdot s^2 \cdot E_s}{R^2 \cdot \sqrt{3 \cdot \left(1 - \nu_p^{\,2}\right)}}$$

$$K_1 := \left(1 - K_o + K_o^{\,2}\right)$$

$$H_4 := \frac{1 - \frac{E_t}{E_s}}{4 \cdot \left(1 - \nu_p^{\,2}\right) \cdot K_1}$$

$$H_3 := \left[\left(1 - 2 \cdot \nu_p\right) - \left(2 - \nu_p\right) \cdot K_o\right]$$

$$H_2 := \left[\left(2 - \nu_p\right) - \left(1 - 2 \cdot \nu_p\right) \cdot K_o\right]$$

$$H_1 := \left[1 + H_4 \cdot \left[H_2^{\,2} - 3 \cdot \left(1 - \nu_p^{\,2}\right)\right]\right]$$

$$C_3 := \left(1 + \frac{H_2 \cdot H_3 \cdot H_4}{\nu_p \cdot H_1}\right)$$

$$C_3 = 0.068$$

$$C_2 := \left(1 - \frac{H_3^{\,2} \cdot H_4}{H_1}\right)$$

$$C_2 = 0.049$$

$$C_1 := \left(1 - \frac{H_2^{\,2} \cdot H_4}{H_1}\right)$$

$$C_1 = 0.897$$

$$C_0 := \sqrt{\frac{C_1 \cdot C_2 - \nu_p^{\,2} \cdot C_3^{\,2}}{1 - \nu_p^{\,2}}}$$

$$C_0 = 0.221$$

$$\alpha_1 := \sqrt[4]{\frac{3\cdot\left[\frac{C_2}{C_1} - \left(\nu_p\cdot\frac{C_3}{C_1}\right)^2\right]}{s^2\cdot R^2}}$$

$$trial := \frac{\alpha_1\cdot L_1}{\pi}$$

$trial = 1.068$

$m := 1$

$$trial2 := \sqrt{\frac{m}{2}\cdot(m+1)}$$

$trial2 = 1$ iterate on m until trial is $\leq$ trial2

$$p_m := p_{aa}\cdot C_0\cdot\left[\left(\frac{\alpha_1\cdot L_1}{\pi\cdot m}\right)^2 + \frac{1}{4}\cdot\left(\frac{\pi\cdot m}{\alpha_1\cdot L_1}\right)^2\right]$$

$p_m = 923.8psi$ failure pressure

$p \equiv 924.0psi$ iteration point – change pressure until $p_m = p$

**Summary**

Axisymmetric Buckling

$p_m = 923.8psi$

Lobar Buckling

$p_{cr} = 605.9psi$

General Instability

$p_g = 1244psi$

## Society of Naval Architects and Marine Engineers

Submersible Vehicle Systems Design (1990)

$ksi := 1000psi$

### Input Section

$L_f := 4.266in$ Length between frames

$L_b := 22.488in$ Length between bulkheads

$R := 8.007in$ Radius of cylinder to centerline of shell

$t := 0.081in$ shell thickness

$R_0 := R + .5 \cdot t$ radius to outside of shell

$R_0 = 8.047in$

$E := 30000ksi$ modulus of elasticity

$\sigma_y := 80 \cdot ksi$ minimum yield stress of material

$\mu := 0.3$ Poisson's ratio

### Ring Stiffeners

$t_w := 0.138in$ thickness of web of ring stiffener

$depth := 0.57in$ total height of ring stiffener

$bf := 0.0in$ breadth of ring stiffener

$d := 0.0in$ ring stiffener flange thickness

$b_2 := bf - t_w$ breadth of ring stiffener minus the web thickness

$c_1 := .5 \cdot \left( \frac{t_w \cdot depth^2 + b_2 \cdot d^2}{t_w \cdot depth + b_2 \cdot d} \right)$ first centroidal height of ring stiffener

$c_1 = 0.285in$

$c_2 := depth - c_1$ second centroidal height of ring stiffener

$c_2 = 0.285in$

$h := c_1 - d$ distance from centroid of ring stiffener to nearest edge of flange

$h = 0.285in$

$R_r := R + .5 \cdot t + c_2$ radius to centroid of ring stiffener

$R_r = 8.332in$

$A_r := (t_w \cdot depth + b_2 \cdot d)$ cross-sectional area of ring stiffener

$A_r = 0.079in^2$

$I_r := \left(\frac{1}{3}\right) \cdot \left(bf \cdot c_1^3 - b_2 \cdot h^3 + t_w \cdot c_2^3\right)$ moment of inertia of ring stiffener about its centroidal axis

$I_r = 2.13 \times 10^{-3} in^4$

**Combined Plate and Ring Stiffener**

$A_p := L_f \cdot t$ area of effective plate

$A_{sp} := A_p + A_r$ area of plate and ring stiffener

$H_c := depth + t$ height of combined plate and ring stiffener

$B_1 := L_f - t_w$ plate length minus the web thickness

$$c_{1c} := .5\left[\frac{t_w \cdot H_c^2 + B_1 \cdot t^2 + b_2 \cdot d \cdot (2 \cdot H_c - d)}{t_w \cdot H_c + B_1 \cdot t + d \cdot b_2}\right]$$

neutral axis of combined plate and ring stiffener

from outer fiber of plate (R0)

$$c_{1c} = 0.101\text{in}$$

$$R_c := R - .5 \cdot t + c_{1c}$$

radius to centroidal axis of combined ring stiffener and shell

$$R_c = 8.067\text{in}$$

$$I_e := \frac{1}{3} \cdot \left[L_f \cdot c_{1c}^3 - B_1 \cdot (c_{1c} - t)^3 + bf \cdot (H_c - c_{1c})^3 - (bf - t_w) \cdot (H_c - c_{1c} - d)^3\right]$$

moment of inertia of combined plate and shell

$$I_e = 0.009\text{in}^4$$

**Axisymmetric yielding**

$$B := \frac{t_w \cdot t}{A_r + t_w \cdot t}$$

$$B = 0.124$$

$$\theta := 10 \cdot \left[12 \cdot \left(1 - \mu^2\right)\right]^{\frac{1}{4}} \cdot \left(\frac{L_f}{2 \cdot R}\right) \cdot \left(\frac{50 \cdot t}{R}\right)^{-\left(\frac{1}{2}\right)}$$

$$\theta = 6.809$$

$$N := \frac{\cosh(\theta) - \cos(\theta)}{\sinh(\theta) + \sin(\theta)}$$

$$N = 0.997$$

$$\beta := \frac{11 \cdot N}{\sqrt{50 \cdot \frac{t}{R}}} \cdot \left(\frac{t^2}{A_r + t_w \cdot t}\right)$$

$$\beta = 1.126$$

$$H := -\left(\frac{3\cdot\sinh\left(\frac{\theta}{2}\right)\cdot\cos\left(\frac{\theta}{2}\right) + \cosh\left(\frac{\theta}{2}\right)\cdot\sin\left(\frac{\theta}{2}\right)}{\sinh(\theta) + \sin(\theta)}\right)$$

$$H = 0.105$$

$$p_y := \frac{\sigma_y\cdot\frac{t}{R}}{1 + H\cdot\left(\frac{0.85 - B}{1 + \beta}\right)}$$

$$p_y = 781.382\text{psi}$$

## Lobar Buckling

$$p_b := \left[\frac{2.42\cdot E}{\left(1 - \mu^2\right)^{\frac{3}{4}}}\right]\cdot\left[\frac{\left(\frac{t}{2\cdot R}\right)^{\frac{5}{2}}}{\left[\frac{L_f}{2\cdot R} - 0.45\cdot\left(\frac{t}{2\cdot R}\right)^{\frac{1}{2}}\right]}\right]$$

$$p_b = 604.9\text{psi}$$

## General Instability

$$m := \frac{\pi\cdot R}{L_b}$$

$$n := 1$$

$$p_{cr1}(n) := \frac{E\cdot t}{R}\cdot\frac{m^4}{\left(n^2 - 1 + \frac{m^2}{2}\right)\cdot\left(n^2 + m^2\right)^2} + \frac{\left(n^2 - 1\right)\cdot E\cdot I_e}{R^3\cdot L_f}$$

Given

$$n \geq 1$$

$n_2 := \text{Minimize}(p_{cr1}, n)$

$n_2 = 3.109$ n must be an integer

$n_{2int} := \text{round}(n_2, 0)$

$n_{2int} = 3$

$$n_{2first} := \begin{cases} n_{2int} \cdot 100 & \text{if } n_{2int} = 1 \\ n_{2int} - 1 & \text{otherwise} \end{cases} \qquad n_{2first} = 2$$

$$n_{2prime} := \begin{pmatrix} n_{2first} \\ n_{2int} \\ n_{2int} + 1 \\ n_{2int} + 2 \end{pmatrix}$$

$$p_{cr2} := \begin{pmatrix} p_{cr1}(n_{2prime_0}) \\ p_{cr1}(n_{2prime_1}) \\ p_{cr1}(n_{2prime_2}) \\ p_{cr1}(n_{2prime_3}) \end{pmatrix}$$

$p_{cr} := \min(p_{cr2})$

$p_{cr} = 1522.3\text{psi}$

**Summary**

Axisymmetric Buckling

$p_y = 781.4\text{psi}$

Lobar Buckling

$p_b = 604.9\text{psi}$

General Instability

$p_{cr} = 1522.3\text{psi}$

## MIT 13A Professional Summer Submarine Design Trends

### PROGRAM TO COMPUTE SUITABILITY OF SUBMARINE DESIGN PARAMETERS.

Ref: "Hull Material Trade Off Study", D Fox, Jan 94

$ksi \equiv 1000 psi$

**Global Variable Inputs:**

$e \equiv 0.0 \cdot in$ Eccentricity

Material:

$\sigma_y \equiv 80000 psi$ yield stress of material

$E \equiv 30000 ksi$ young's modululs

$\nu \equiv 0.3$ poisson's ratio

Geometry:

$R \equiv 8.007 in$ shell radius

$D \equiv 2 \cdot R$ shell diameter

$L_f \equiv 4.266 in$ frame spacing

$L_s \equiv 22.488 in$ bulkhead spacing

$t_p \equiv 0.081 in$ shell thickness

$t_f \equiv 0.0 in$ flange tickness

$w_f \equiv 0.0 in$ flange width

$t_w \equiv 0.138 in$ web thickness

$h_w \equiv 0.57 in$ web height

Compute areas:

$R_1 := R + \frac{t_p}{2}$ Frame Radius

$R_1 = 8.047in$

$A_f := t_f \cdot w_f$ Frame flange, web area

$A_w := t_w \cdot h_w$

$A := A_f + A_w$ Frame Area = Flange + Web

$A = 0.079in^2$

**PART 1 SHELL YIELDING**

Von Sanden and Gunther (1952)

PNA Section 8.4

$B := \frac{t_w \cdot t_p}{A + t_w \cdot t_p}$ Area ratio

$B = 0.124$

$\theta := L_f \cdot \left[\frac{3 \cdot \left(1 - \nu^2\right)}{\left(R \cdot t_p\right)^2}\right]^{\frac{1}{4}}$ Slenderness Parameter

$\theta = 6.809$

$N := \frac{\cosh(\theta) - \cos(\theta)}{\sinh(\theta) + \sin(\theta)}$ Deflection coefficient

$\beta := \frac{2 \cdot N}{A + t_w \cdot t_p} \cdot \left[\frac{1}{3 \cdot \left(1 - \nu^2\right)}\right]^{0.25} \cdot \sqrt{R \cdot t_p^{\,3}}$ Frame flexibility parameter

$\beta = 1.126$

$$\Gamma := \frac{\left(1 - \frac{\nu}{2}\right) - B}{1 + \beta}$$

Frame deflection parameter

$$\Gamma = 0.341$$

$$H_M := -2 \cdot \frac{\sinh\left(\frac{\theta}{2}\right) \cdot \cos\left(\frac{\theta}{2}\right) + \cosh\left(\frac{\theta}{2}\right) \cdot \sin\left(\frac{\theta}{2}\right)}{\sinh(\theta) + \sin(\theta)}$$

Bending effect (mem)

$$H_M = 0.081$$

$$H_E := -2 \cdot \left(\frac{3}{1 - \nu^2}\right)^{0.5} \cdot \frac{\sinh\left(\frac{\theta}{2}\right) \cdot \cos\left(\frac{\theta}{2}\right) - \cosh\left(\frac{\theta}{2}\right) \cdot \sin\left(\frac{\theta}{2}\right)}{\sinh(\theta) + \sin(\theta)}$$

Bending effect (bend)

$$H_E = 0.085$$

$$K := \frac{\sinh(\theta) - \sin(\theta)}{\sinh(\theta) + \sin(\theta)}$$

Bending efffect near frame

```
p_crl := | f_y ← σ_y
         | P_0 ← 1 psi
         | P_1 ← 1000 psi
         | P_2 ← 2000 psi
         | delta ← 5 psi
         | limit ← 1 psi
         | conv ← 1 psi
         | j ← 0
         | while j ≤ 20
         |   | for i ∈ 0..2
         |   |   | σ_φφso ← (-P_i·R / t_p)·[1 + Γ·H_M + ν·H_E]
         |   |   | σ_φφsi ← (-P_i·R / t_p)·[1 + Γ·H_M - ν·H_E]
         |   |   | σ_xxso ← (-P_i·R / t_p)·(0.5 + Γ·H_E)
         |   |   | σ_xxsi ← (-P_i·R / t_p)·(0.5 - Γ·H_E)
         |   |   | σ_φφfo ← (-P_i·R / t_p)·[1 - Γ·[1 + ν·(3 / (1 - ν^2))^0.5 ·K]]
         |   |   | σ_φφfi ← (-P_i·R / t_p)·[1 - Γ·[1 - ν·(3 / (1 - ν^2))^0.5 ·K]]
```

$$\sigma_{\phi\phi fi} \leftarrow \frac{-P_i \cdot R}{t_p} \cdot \left[1 - \Gamma \cdot \left[1 - \nu \cdot \left(\frac{3}{1-\nu^2}\right)^{0.5} \cdot K\right]\right]$$

$$\sigma_{xxfo} \leftarrow \frac{-P_i \cdot R}{t_p} \cdot \left[0.5 - \Gamma \cdot \left(\frac{3}{1-\nu^2}\right)^{0.5} \cdot K\right]$$

$$\sigma_{xxfi} \leftarrow \frac{-P_i \cdot R}{t_p} \cdot \left[0.5 + \Gamma \cdot \left(\frac{3}{1-\nu^2}\right)^{0.5} \cdot K\right]$$

$$\sigma_{sy} \leftarrow \begin{pmatrix} \sigma_{\phi\phi so} \\ \sigma_{\phi\phi si} \\ \sigma_{xxso} \\ \sigma_{xxsi} \\ \sigma_{\phi\phi fo} \\ \sigma_{\phi\phi fi} \\ \sigma_{xxfo} \\ \sigma_{xxfi} \end{pmatrix}$$

$$\sigma_1 \leftarrow \sigma_{sy_0}$$

$$\sigma_2 \leftarrow \sigma_{sy_2}$$

$$\sigma_3 \leftarrow \sigma_{sy_5}$$

$$\sigma_4 \leftarrow \sigma_{sy_7}$$

$$\sigma_{SYM} \leftarrow \left(\sigma_1^2 - \sigma_1 \cdot \sigma_2 + \sigma_2^2\right)^{\frac{1}{2}}$$

$$\sigma_{SYF} \leftarrow \left(\sigma_3^2 - \sigma_3 \cdot \sigma_4 + \sigma_4^2\right)^{\frac{1}{2}}$$

$$\sigma_{SY} \leftarrow \max\left(\begin{pmatrix} \sigma_{SYM} \\ \sigma_{SYF} \end{pmatrix}\right)$$

$$stress_i \leftarrow \sigma_{SY}$$

$$test_i \leftarrow |f_y - \sigma_{SY}|$$

$$shel \leftarrow \frac{test_0}{conv}$$

$$dav \leftarrow \frac{test_1}{conv}$$

$$\text{break if } |stress_1 - f_y| \le limit$$

$$P_0 \leftarrow P_1 \text{ if } shel \cdot dav > 0$$

$$P_2 \leftarrow P_1 \text{ if } shel \cdot dav < 0$$

$$P_1 \leftarrow P_0 + \frac{|P_2 - P_0|}{2}$$

$$j \leftarrow j + 1$$

$$out_0 \leftarrow \frac{P_1}{conv}$$

$$out_1 \leftarrow j - 1$$

out

$$p_{crl} = \begin{pmatrix} 801.682 \\ 14 \end{pmatrix}$$

$$p_{crit} := p_{crl_0} \cdot 1psi$$

$$p_{crit} = 801.7psi$$

## PART 2 LOBAR BUCKLING

Windenberg Approx of Von Mises (1933)

Assumes n lobes = Pi*D/L

Collapse pressure:

$$P_{cLB} := \frac{2.42 \cdot E \cdot \left(\frac{t_p}{D}\right)^{2.5}}{\left(\frac{L_f}{D} - 0.45 \cdot \sqrt{\frac{t_p}{D}}\right) \cdot \left(1 - \nu^2\right)^{0.75}}$$

$$P_{cLB} = 604.9psi$$

## PART 3 GENERAL INSTABILITY

Corrected Bryant Formula (1954) for better model test correlation

Pressure loading is:

$$P := \rho \cdot g \cdot D_t \cdot SF_{gi}$$

$$P = 6697.99psi$$

Compute *effective* frame spacing:

$$\gamma := \frac{P}{2 \cdot E} \cdot \left(\frac{R}{t_p}\right)^2 \cdot \sqrt{3 \cdot \left(1 - \nu^2\right)}$$

$$\gamma = 1.802$$

Compute clear length:

$L_c := L_f - t_w$

$n_1 := 0.5 \cdot \sqrt{1 - \gamma}$

$n_1 = 0.448i$

Web thickness:

$n_2 := 0.5 \cdot \sqrt{1 + \gamma}$

$n_2 = 0.837$

$$F_1 := \frac{4}{\theta} \cdot \left| \frac{\cosh(n_1 \cdot \theta)^2 - \cos(n_2 \cdot \theta)^2}{\frac{\cosh(n_1 \cdot \theta) \cdot \sinh(n_1 \cdot \theta)}{n_1} + \frac{\cos(n_2 \cdot \theta) \cdot \sin(n_2 \cdot \theta)}{n_2}} \right|$$

$F_1 = 0.23$

must be less

than 1.00

F1 is almost a linear decreasing function for pressures from 1 to 2000 psi with an average value of 0.27. This will be used in the following analysis as the pressure is the unknown and therefore the above equations cannot be directly used.

$F_1 := 0.27$

$L_{eff} := L_c \cdot F_1 + t_w$ Effective shell plate length:

$L_{eff} = 1.253in$

Theoretical critical lobe number values are:

$i := 0..2$

$n := \begin{pmatrix} 2 \\ 3 \\ 4 \end{pmatrix}$ Circumferential Lobes

$A_{eff} := L_{eff} \cdot t_p$ Effective plate area

$A_{eff} = 0.101in^2$

$m := \pi \cdot \frac{R}{L_s}$ Longitudinal Lobes

$m = 1.119$

$y_{na} := \frac{\left(\frac{h_w + t_f}{2}\right) \cdot A_f - \left(\frac{h_w + t_p}{2}\right) \cdot A_{eff}}{A_{eff} + A_w + A_f}$ Frame-plate neutral axis (ref web centre+ toward flange):

$y_{na} = -0.183in$

Uses Parallel Axis Theorm: Icor = I + Ad2

Moments of inertia for plate,flange,web:

$I_p := \frac{L_{eff} \cdot t_p^3}{12}$

$I_w := \frac{t_w \cdot h_w^3}{12}$

$I_f := \frac{w_f \cdot t_f^3}{12}$

$I_{pcor} := I_p + A_{eff} \cdot \left[\left(\frac{t_p + h_w}{2}\right) + y_{na}\right]^2$

$I_{wcor} := I_w + A_w \cdot (y_{na})^2$

$I_{fcor} := I_f + A_f \cdot \left(\frac{t_f + h_w}{2} - y_{na}\right)^2$

Total:

$I_{eff} := I_{pcor} + I_{wcor} + I_{fcor}$

$$I_{eff} = 0.007in^4$$

The critical Elastic General Instability pressure is:

$$P_{cGI_i} := \frac{E \cdot t_p}{R} \cdot \frac{m^4}{\left[\left(n_i\right)^2 - 1 + \frac{m^2}{2}\right] \cdot \left[\left(n_i\right)^2 + m^2\right]^2} + \frac{\left[\left(n_i\right)^2 - 1\right] \cdot E \cdot I_{eff}}{R^3 \cdot L_f}$$

Min Pressure:

$$P_{cGI} = \begin{pmatrix} 5.035 \times 10^3 \\ 1.278 \times 10^3 \\ 1.516 \times 10^3 \end{pmatrix} psi \qquad n := \begin{pmatrix} 2 \\ 3 \\ 4 \end{pmatrix}$$

$P_{cGI} := \min(P_{cGI})$

$$P_{cGI} = 1278.1psi$$

**Summary**

Axisymmetric Buckling

$p_{crit} = 801.7psi$

Lobar Buckling

$P_{cLB} = 604.9psi$

General Instability

$P_{cGI} = 1278.1psi$

## Analytic Solution

### Definitions

$ksi := 6.89475710^{6}Pa$

$E := 30000ksi$ Modulus of Elasticity

$R := 8.007in$ Radius of cylinder to centerline of shell

$D := 2 \cdot R$ Diameter of cylinder

$\sigma_y := 80ksi$ Yield strength

$L := 4.266in$ Length of supported cylinder

$L_b := 22.488in$ Distance between bulkheads

$\mu := .3$ Poison's ratio for Fe/Steel

$t := 0.081in$ Shell thickness

### Ring Stiffeners

$t_w := 0.138in$ thickness of web of ring stiffener

$H := 0.57in$ height of ring stiffener

$b := t_w$ faying width of stiffener (from P&S for I beam stiffener)

$bf := 0.0in$ breadth of ring stiffener

$b_2 := bf - t_w$ breadth of ring stiffener minus the web thickness

$d := 0.0in$ ring stiffener flange thickness

$L_{bnash} := L - bf$ distance from flange edges

$c_1 := .5 \cdot \left( \frac{t_w \cdot H^2 + b_2 \cdot d^2}{t_w \cdot H + b_2 \cdot d} \right)$ first centroidal height of ring stiffener

$c_1 = 0.285in$

$c_2 := H - c_1$ second centroidal height of ring stiffener

$c_2 = 0.285in$

$h := c_1 - d$ distance from centroid of ring stiffener to nearest edge of flange

$h = 0.285in$

$R_r := R + .5 \cdot t + c_2$ radius to centroid of ring stiffener

$R_r = 8.332in$

$A_r := (t_w \cdot H + b_2 \cdot d)$ cross-sectional area of ring stiffener

$A_r = 0.079in^2$

$I_r := \left(\frac{1}{3}\right) \cdot \left(bf \cdot c_1^3 - b_2 \cdot h^3 + t_w \cdot c_2^3\right)$ moment of inertia of ring stiffener about its centroidal axis

$I_r = 2.13 \times 10^{-3} in^4$

$A_{eff} := A_r \cdot \left(\frac{R}{R_r}\right)$ effective area of stiffener eqn [24a] from P&S

$A_{eff} = 0.076in^2$

$\alpha := \frac{A_{eff}}{L \cdot t}$ ratio of effective frame area to shell area eqn [62] P&S

$\alpha = 0.219$

$\beta := \frac{b}{L}$ ratio of faying width to frame spacing eqn [62] P&S

$\beta = 0.032$

**Combined Plate and Ring Stiffener**

$A_p := L \cdot t$ area of effective plate

$A_{sp} := A_p + A_r$ area of plate and ring stiffener

$H_c := H + t$ height of combined plate and ring stiffener

$H_c = 0.054ft$

$B_1 := L - t_w$ plate length minus the web thickness

$$c_{1c} := .5\left[\frac{t_w \cdot H_c^2 + B_1 \cdot t^2 + b_2 \cdot d \cdot (2 \cdot H_c - d)}{t_w \cdot H_c + B_1 \cdot t + d \cdot b_2}\right]$$

neutral axis of combined plate and ring stiffener

from outer fiber of plate ($R_0$)

$c_{1c} = 0.101in$

$R_c := R + .5 \cdot t + c_{1c}$ radius to centroidal axis of combined ring stiffener and shell

$R_c = 8.148in$

$$I_e := \frac{1}{3} \cdot \left[L \cdot c_{1c}^3 - B_1 \cdot (c_{1c} - t)^3 + bf \cdot (H_c - c_{1c})^3 - (bf - t_w) \cdot (H_c - c_{1c} - d)^3\right]$$

moment of inertia of combined plate and shell

$I_e = 0.01in^4$

Buckling of unreinforced shells

von Mises bucking pressure:

$n := 1$

guess at number of waves around the circumference

$$p_{ur1}(n) := \left(\frac{E \cdot t}{R}\right) \cdot \left[\frac{1}{n^2 + .5 \cdot \left(\frac{\pi \cdot R}{L}\right)^2}\right] \cdot \left[\left[\frac{\left(\frac{\pi \cdot R}{L}\right)^4}{\left[n^2 + \left(\frac{\pi \cdot R}{L}\right)^2\right]^2}\right] + \left[\frac{\left(\frac{t}{R}\right)^2}{12 \cdot \left(1 - \mu^2\right)}\right] \cdot \left[n^2 + \left(\frac{\pi \cdot R}{L}\right)^2\right]^2\right]$$

Given

$n \geq 1$

$n_1 := \text{Minimize}(p_{ur1}, n)$

$n_1 = 10.594$

n must be an integer

$n_{1int} := \text{round}(n_1, 0)$

$n_{1int} = 11$

$$n_{1prime} := \begin{pmatrix} n_{1int} - 1 \\ n_{1int} \\ n_{1int} + 1 \\ n_{1int} + 2 \end{pmatrix}$$

$$p_{ur1} := \begin{pmatrix} p_{ur1}(n_{1prime_0}) \\ p_{ur1}(n_{1prime_1}) \\ p_{ur1}(n_{1prime_2}) \\ p_{ur1}(n_{1prime_3}) \end{pmatrix}$$

$p_{ur} := \min(p_{ur1})$

$p_{ur} = 607.943 \text{psi}$

## Axisymmetric Buckling

$$
\begin{aligned}
p_{cab} := \;& \gamma \leftarrow 0 \\
& limit \leftarrow 10\ psi \\
& test \leftarrow 0\ psi \\
& conv \leftarrow 1\ psi \\
& j \leftarrow 0 \\
& \text{while } j \le 20 \\
& \quad \eta_1 \leftarrow \frac{1}{2}\cdot\sqrt{1-\gamma} \\
& \quad \eta_2 \leftarrow \frac{1}{2}\cdot\sqrt{1+\gamma} \\
& \quad \theta \leftarrow \sqrt[4]{3\cdot\left(1-\mu^2\right)}\cdot\frac{L}{\sqrt{R\cdot t}} \\
& \quad F_1 \leftarrow \frac{4}{\theta}\cdot\frac{\cosh\left(\eta_1\cdot\theta\right)^2-\cos\left(\eta_2\cdot\theta\right)^2}{\frac{\cosh\left(\eta_1\cdot\theta\right)\cdot\sinh\left(\eta_1\cdot\theta\right)}{\eta_1}+\frac{\cos\left(\eta_2\cdot\theta\right)\cdot\sin\left(\eta_2\cdot\theta\right)}{\eta_2}} \\
& \quad F_2 \leftarrow \frac{\frac{\cosh\left(\eta_1\cdot\theta\right)\cdot\sin\left(\eta_2\cdot\theta\right)}{\eta_2}+\frac{\sinh\left(\eta_1\cdot\theta\right)\cdot\cos\left(\eta_2\cdot\theta\right)}{\eta_1}}{\frac{\cosh\left(\eta_1\cdot\theta\right)\cdot\sinh\left(\eta_1\cdot\theta\right)}{\eta_1}+\frac{\cos\left(\eta_2\cdot\theta\right)\cdot\sin\left(\eta_2\cdot\theta\right)}{\eta_2}} \\
& \quad F_3 \leftarrow \sqrt{\frac{3}{1-\mu^2}}\cdot\frac{\frac{\cos\left(\eta_2\cdot\theta\right)\cdot\sin\left(\eta_2\cdot\theta\right)}{\eta_2}-\frac{\cosh\left(\eta_1\cdot\theta\right)\cdot\sinh\left(\eta_1\cdot\theta\right)}{\eta_1}}{\frac{\cosh\left(\eta_1\cdot\theta\right)\cdot\sinh\left(\eta_1\cdot\theta\right)}{\eta_1}+\frac{\cos\left(\eta_2\cdot\theta\right)\cdot\sin\left(\eta_2\cdot\theta\right)}{\eta_2}} \\
& \quad F_4 \leftarrow \sqrt{\frac{3}{1-\mu^2}}\cdot\frac{\frac{\cosh\left(\eta_1\cdot\theta\right)\cdot\sin\left(\eta_2\cdot\theta\right)}{\eta_2}-\frac{\sinh\left(\eta_1\cdot\theta\right)\cdot\cos\left(\eta_2\cdot\theta\right)}{\eta_1}}{\frac{\cosh\left(\eta_1\cdot\theta\right)\cdot\sinh\left(\eta_1\cdot\theta\right)}{\eta_1}+\frac{\cos\left(\eta_2\cdot\theta\right)\cdot\sin\left(\eta_2\cdot\theta\right)}{\eta_2}} \\
& \quad A \leftarrow \frac{\left(1-\frac{\mu}{2}\right)\cdot\alpha}{\alpha+\beta+(1-\beta)\cdot F_1} \\
& \quad denom1 \leftarrow A^2\cdot\left[F_2^{\,2}+F_2\cdot F_4\cdot(1-2\cdot\mu)\cdot\left(\sqrt{\frac{0.91}{1-\mu^2}}\right)+F_4^{\,2}\cdot\left(1-\mu+\mu^2\right)\cdot\left(\frac{0.91}{1-\mu^2}\right)\right] \\
& \quad denom2 \leftarrow \left(\frac{3}{2}\right)\cdot A\cdot\left(F_2-\mu\cdot F_4\cdot\sqrt{\frac{0.91}{1-\mu^2}}\right) \\
& \quad p_{c2} \leftarrow \frac{\sigma_y\cdot\left(\frac{t}{R}\right)}{\sqrt{\frac{3}{4}+denom1-denom2}} \\
& \quad \text{break if } \left|p_{c2}-test\right| \le limit \\
& \quad \gamma \leftarrow \frac{p_{c2}}{2\cdot E}\cdot\left[\sqrt{3\cdot\left(1-\mu^2\right)}\right]\cdot\left(\frac{R}{t}\right)^2 \\
& \quad test \leftarrow p_{c2} \\
& \quad j \leftarrow j+1 \\
& \quad out_0 \leftarrow \frac{p_{c2}}{conv} \\
& \quad out_1 \leftarrow j \\
& out
\end{aligned}
$$

$$p_{cab} = \begin{pmatrix} 885.4 \\ 2 \end{pmatrix}$$

$$p_{axiy} := p_{cab_0} \cdot 1psi$$

$$p_{axiy} = 885.4psi$$

**Asymmetric Collapse (Lobar buckling)**

Windenberg Approx of Von Mises (1933)

Assumes n lobes = Pi*D/L

$$p_{cLB} := \frac{2.42 \cdot E \cdot \left(\frac{t}{D}\right)^{2.5}}{\left(\frac{L}{D} - 0.45 \cdot \sqrt{\frac{t}{D}}\right) \cdot \left(1 - \mu^2\right)^{0.75}}$$

$$p_{cLB} = 604.9psi$$

**General Instability of shells and rings**

$$\lambda := \frac{\pi \cdot R}{L_b}$$

$$n := 1$$

$$p_{cGI}(n) := \frac{E \cdot t}{R} \cdot \frac{\lambda^4}{\left(n^2 - 1 + \frac{\lambda^2}{2}\right) \cdot \left(n^2 + \lambda^2\right)^2} + \frac{\left(n^2 - 1\right) \cdot E \cdot I_e}{R^3 \cdot L}$$

Given

$$n \geq 1$$

$$n_2 := \text{Minimize}(p_{cGI}, n)$$

$n_2 = 3.109$ n must be an integer

$n_{2int} := \mathrm{round}(n_2, 0)$

$n_{2int} = 3$

$$n_{2prime} := \begin{pmatrix} n_{2int} - 1 \\ n_{2int} \\ n_{2int} + 1 \\ n_{2int} + 2 \end{pmatrix}$$

$$p_{cgi2} := \begin{pmatrix} p_{cGI}(n_{2prime_0}) \\ p_{cGI}(n_{2prime_1}) \\ p_{cGI}(n_{2prime_2}) \\ p_{cGI}(n_{2prime_3}) \end{pmatrix}$$

$p_{cgibryant} := \min(p_{cgi2})$

$p_{cgibryant} = 1.522 \times 10^3$ psi

**Summary**

Lobar Buckling

$p_{cLB} = 604.9$psi

Axisymmetric Buckling

$p_{axiy} = 885.4$psi

General Instability

$p_{cgibryant} = 1522.3$psi

$n_{2int} = 3$

# Appendix B: Codes for Test Cylinder 1.f

# AMERICAN BUREAU OF SHIPPING

## Definitions

$ksi := 1000psi$

$E := 30000ksi$ Modulus of Elasticity

$\nu := 0.3$ Poisson's Ratio

$\sigma_y := 98500psi$ Yield strength

## Shell Parameters

$L_s := 2.665in$ Distance between stiffeners

$L_c := 42.129in$ Distance between bulkheads

$R := 17.3285in$ Mean radius of shell

$t := 0.263in$ Thickness of shell

$R_o := R + \frac{t}{2}$ Outer radius of shell

$R_o = 17.46in$

$D_o := 2 \cdot R_o$ Outer Diameter of shell

## Ring Stiffeners

$t_w := 0.198in$ thickness of web of ring stiffener

$depth := 1.025in$ height of ring stiffener

$b := t_w$ faying width of stiffener (from P&S for I beam stiffener)

$bf := 0.763in$ breadth of ring stiffener

$b_2 := bf - t_w$ breadth of ring stiffener minus the web thickness

$d := .263in$ ring stiffener flange thickness

$L_b := L_s - t_w$ Unsupported spacing between stiffeners

$L_b = 2.467in$

$L := \max(L_s, L_b)$

$L = 2.665in$

$c_1 := .5 \cdot \left( \frac{t_w \cdot depth^2 + b_2 \cdot d^2}{t_w \cdot depth + b_2 \cdot d} \right)$ first centroidal height of ring stiffener

$c_1 = 0.351in$

$c_2 := depth - c_1$ second centroidal height of ring stiffener

$c_2 = 0.674in$

$h := c_1 - d$ distance from centroid of ring stiffener to nearest edge of flange

$R_s := R - .5 \cdot t - c_2$ radius to centroid of ring stiffener

$R_s = 16.523in$

$A_s := (t_w \cdot depth + b_2 \cdot d)$ cross-sectional area of ring stiffener

$A_s = 0.352in^2$

$I_r := \left(\frac{1}{3}\right) \cdot \left(bf \cdot c_1^3 - b_2 \cdot h^3 + t_w \cdot c_2^3\right)$ moment of inertia of ring stiffener about its centroidal axis

$I_r = 0.031in^4$

$R_f := R - .5 \cdot t - depth$ Radius to tip of the stiffener

$R_f = 16.172in$

**Combined Plate and Ring Stiffener**

$L_e := \min\begin{pmatrix} 1.5\cdot\sqrt{R\cdot t} \\ 0.75\cdot L_s \end{pmatrix}$ Effective length of shell

$L_e = 1.999in$

$A_p := L\cdot t$ area of effective plate

$A_{sp} := A_p + A_s$ area of plate and ring stiffener

$H_c := depth + t$ height of combined plate and ring stiffener

$H_c = 0.107ft$

$B_1 := L - t_w$ plate length minus the web thickness

$c_{1c} := .5\left[\frac{t_w\cdot H_c^2 + B_1\cdot t^2 + b_2\cdot d\cdot(2\cdot H_c - d)}{t_w\cdot H_c + B_1\cdot t + d\cdot b_2}\right]$ neutral axis of combined plate and ring stiffener

from outer fiber of plate (R0)

$c_{1c} = 0.4in$

$R_c := R + .5\cdot t - c_{1c}$ radius to centroidal axis of combined ring stiffener and shell

$R_c = 17.06in$

$I_e := \frac{1}{3}\cdot\left[L\cdot c_{1c}^3 - B_1\cdot(c_{1c} - t)^3 + bf\cdot(H_c - c_{1c})^3 - (bf - t_w)\cdot(H_c - c_{1c} - d)^3\right]$

moment of inertia of combined plate and shell

$I_e = 0.187in^4$

**General Equations**

$M := \frac{L}{\sqrt{R\cdot t}}$

$M = 1.248$

$$\theta := \left[3\cdot\left(1 - \nu^2\right)\right]^{\frac{1}{4}}\cdot M$$

$$\theta = 1.605$$

$$Q := \frac{\theta}{2}$$

$$Q = 0.802$$

$$N := \frac{\cosh(2\cdot Q) - \cos(2\cdot Q)}{\sinh(2\cdot Q) + \sin(2\cdot Q)}$$

$$N = 0.774$$

$$G := 2\cdot\frac{(\sinh(Q)\cdot\cos(Q) + \cosh(Q)\cdot\sin(Q))}{\sinh(2\cdot Q) + \sin(2\cdot Q)}$$

$$G = 0.934$$

$$H := \frac{\sinh(2Q) - \sin(2\cdot Q)}{\sinh(2\cdot Q) + \sin(2Q)}$$

$$H = 0.41$$

**Inter-Stiffener Strength (6.19.1)**

1) Inter-stiffener strength equations

**This equates to axisymmetric buckling**

$$A := A_s\cdot\left(\frac{R}{R_s}\right)$$ Effective area of plate and stiffener

$$A = 0.369\text{in}^2$$

$$F := \frac{A\cdot\left(1 - \frac{\nu}{2}\right)\cdot G}{A + t_w\cdot t + \frac{2N\cdot t\cdot L}{\theta}}$$

$$F = 0.267$$

yield pressure at midbay and midplane of cylinder

$$P_y := \frac{\sigma_y \cdot \frac{t}{R}}{1 - F}$$

$$P_y = 2039.3\text{psi}$$

von Mises buckling pressure for a cylinder

**This corresponds to Lobar buckling**

$$P_m := \frac{2.42 \cdot E \cdot \left(\frac{t}{2 \cdot R}\right)^{\frac{5}{2}}}{\left(1 - \nu^2\right)^{\frac{3}{4}} \cdot \left[\frac{L}{2 \cdot R} - 0.45 \cdot \left(\frac{t}{2 \cdot R}\right)^{\frac{1}{2}}\right]}$$

$$P_m = 10369.9\text{psi}$$

maximum allowable working pressure for inter-stiffener strength

$$P_c := \begin{cases} \frac{P_m}{2} & \text{if } \frac{P_m}{P_y} \le 1 \\ P_y \cdot \left(1 - \frac{P_y}{2 \cdot P_m}\right) & \text{if } 1 < \frac{P_m}{P_y} \le 3 \\ \frac{5}{6} \cdot P_y & \text{if } \frac{P_m}{P_y} > 3 \end{cases}$$

$$\frac{P_m}{P_y} = 5.085$$

$$P_c = 1699.4\text{psi}$$

$$P_{aits} := P_c \cdot .8 \qquad P_{aits} = 1359.5\text{psi}$$

2) longitudinal stress

limiting pressure corresponding to the longitudinal stress at stiffeners reaching yield

No direct correlation to major failure modes

$$\gamma := \frac{A\cdot\left(1-\frac{\nu}{2}\right)}{A + t_w\cdot t + \frac{2\cdot N\cdot t\cdot L}{\theta}}$$

$$P_l := \frac{2\cdot\sigma_y\cdot t}{R}\cdot\left[1+\left(\frac{12}{1-\nu^2}\right)^{\frac{1}{2}}\cdot\gamma\cdot H\right]^{-1}$$

$P_l = 2098\text{psi}$

$P_{als} := P_l\cdot .67$ maximum allowable working pressure for longitudinal stress

$P_{als} = 1405.69\text{psi}$

**Overall Buckling Strength (6.19.5)**

$$\lambda := \frac{\pi\cdot R}{L_c}$$

$n := 1$

$A_2(n) := n^2 - 1$

$$A_1(n) := \frac{\lambda^4}{\left(A_2(n)+\frac{\lambda^2}{2}\right)\cdot\left(n^2+\lambda^2\right)^2}$$

$$p_{n1}(n) := \frac{E\cdot t}{R}\cdot A_1(n) + \frac{E\cdot I_e\cdot A_2(n)}{R^3\cdot L}$$

Given

$n \geq 2$

$n_2 := \text{Minimize}(p_{n1}, n)$

$n_2 = 2.974$ n must be an integer

$n_{2int} := \text{round}(n_2, 0)$

$n_{2int} = 3$

$$n_{2first} := \begin{cases} n_{2int} \cdot 100 & \text{if } n_{2int} = 1 \\ n_{2int} - 1 & \text{otherwise} \end{cases}$$

$n_{2first} = 2$

$$n_{2prime} := \begin{pmatrix} n_{2first} \\ n_{2int} \\ n_{2int} + 1 \\ n_{2int} + 2 \end{pmatrix}$$

$n_{2prime_1} = 3$

$$p_{n2} := \begin{pmatrix} p_{n1}(n_{2prime_0}) \\ p_{n1}(n_{2prime_1}) \\ p_{n1}(n_{2prime_2}) \\ p_{n1}(n_{2prime_3}) \end{pmatrix}$$

$$p_{n2} = \begin{pmatrix} 1.151 \times 10^4 \\ 4.496 \times 10^3 \\ 6.32 \times 10^3 \\ 9.774 \times 10^3 \end{pmatrix} \text{psi}$$

$p_n := \min(p_{n2})$

$p_n = 4496.1\text{psi}$

$P_{aol} := p_n \cdot .5$

$P_{aol} = 2.248 \times 10^3 \text{ psi}$

**Summary**

Axisymmetric Buckling

$P_y = 2039.3$psi

Lobar Buckling

$P_m = 10369.9$psi

General Instability

$p_n = 4496.1$psi

$n_{2int} = 3$

## Germanischer Lloyd

$MPa := 10^6 Pa$

$ksi := 10^3 psi$

### General Definitions

| | |
|---|---|
| $E := 30000 ksi$ | modulus of elasticity |
| $L_1 := 2.665 in$ | stiffener spacing |
| $L_3 := 42.129 in$ | length of cylinder between bulkheads or lines of support |
| $s := 0.263 in$ | thickness of shell |
| $R := 17.3285 in$ | radius to centerline of shell |
| $\nu := 0.3$ | Poisson's Ratio |
| $k := 98.5 \cdot ksi$ | minimum yield stress of material |

### Stiffener Dimensions

| | |
|---|---|
| $e_f := 0.263 in$ | flange thickness |
| $d_f := 0.2825 in$ | width of flange from web to edge of flange |
| $b_2 := 2 \cdot d_f$ | |
| $d_w := 0.762 in$ | Height of web |
| $e_w := 0.198 in$ | web thickness |
| $b := e_w$ | width of stiffener ring in contact with shell |
| $A_1 := e_f \cdot (e_w + 2 \cdot d_f) + e_w \cdot d_w$ | cross-sectional area of stiffener ring |

$A_1 = 0.352 in^2$

$H_{stiff} := d_w + e_f$

$H_{stiff} = 1.025in$

$$c_1 := \frac{1}{2} \cdot \frac{e_w \cdot H_{stiff}^2 + b_2 \cdot e_f^2}{e_w \cdot H_{stiff} + b_2 \cdot e_f}$$

$c_1 = 0.351in$

$c_2 := H_{stiff} - c_1$

$c_2 = 0.674in$

$h_2 := c_1 - e_f$

$h_2 = 0.088in$

$I_1 := \left(\frac{1}{3}\right) \cdot \left[\left(e_w + 2 \cdot d_f\right) \cdot c_1^3 - \left(2 \cdot d_f\right) \cdot h_2^3 + e_w \cdot c_2^3\right]$ Centroidal Moment of inertia of ring stiffener

$I_1 = 0.031in^4$

$e := c_2 + .5 \cdot s$ distance from stiffener centroid to center of shell

$e = 0.805in$

**Effective Stiffener and Shell**

$L_{etest} := b + \sqrt{2 \cdot R \cdot s}$

$$L_e := \begin{cases} L_{etest} & \text{if } L_{etest} \le L_1 \\ L_1 & \text{otherwise} \end{cases}$$ Effective length of shell (eqn 45a,b)

$L_e = 2.665in$

$$I_e := \frac{A_1 \cdot e^2}{1 + \frac{A_1}{L_e \cdot s}} + I_1 + \frac{L_e \cdot s^3}{12}$$ Moment of Inertia of combined plate and shell

$I_e = 0.187in^4$

$H_{stiffc} := H_{stiff} + s$ Total height of stiffener and plate

$H_{stiffc} = 1.288in$

$d_1 := s$

$bs_1 := L_e - e_w$

$$c_{1c} := \frac{1}{2} \cdot \frac{e_w \cdot H_{stiffc}^2 + b_2 \cdot e_f^2 + bs_1 \cdot s \cdot (2 \cdot H_{stiffc} - s)}{e_w \cdot H_{stiffc} + b_2 \cdot e_f + bs_1 \cdot s}$$

$c_{1c} = 0.888in$

$c_{2c} := H_{stiffc} - c_{1c}$

$c_{2c} = 0.4in$

$R_o := R + .5 \cdot s - c_{2c}$ radius of stiffener ring centroid including effect of $L_e$

$R_o = 17.06in$

$A := A_1 \cdot \frac{R^2}{R_o^2}$ Modified area of stiffener ring

$A = 0.363in^2$

$e_1 := c_{2c} + .5 \cdot s$

## 2.4 Asymmetric Buckling (Lobar but not named this)

$\lambda_1 := \frac{\pi \cdot R}{L_1}$ eqn 19

$n := 2$ initial guess

$$\beta_{n1}(n) := \frac{\left[\left(\frac{n^2}{\lambda_1^2}+1\right)^{-2} + \frac{s^2\cdot\left(n^2-1+\lambda_1^2\right)^2}{12\cdot R^2\cdot\left(1-\nu^2\right)}\right]}{n^2-1+.5\cdot\lambda_1^2}$$ eqn 18

$$p_{n1}(n) := \frac{E\cdot s\cdot\beta_{n1}(n)}{R}$$ eqn 17

Given

$n \geq 2$

$n_g := \text{Minimize}(p_{n1}, n)$

$n_g = 10.936$ n must be an integer

$n_{gint} := \text{round}(n_g, 0)$

$n_{gint} = 11$

$$n_{gfirst} := \begin{cases} n_{gint}\cdot 100 & \text{if } n_{gint} = 1 \\ n_{gint} - 1 & \text{otherwise} \end{cases}$$

$n_{gfirst} = 10$

$$n_{gprime} := \begin{pmatrix} n_{gfirst} \\ n_{gint} \\ n_{gint}+1 \\ n_{gint}+2 \end{pmatrix} \qquad n_{gprime} = \begin{pmatrix} 10 \\ 11 \\ 12 \\ 13 \end{pmatrix}$$

$$p_{n2} := \begin{pmatrix} p_{n1}(n_{gprime_0}) \\ p_{n1}(n_{gprime_1}) \\ p_{n1}(n_{gprime_2}) \\ p_{n1}(n_{gprime_3}) \end{pmatrix}$$

$p_{cr} := \min(p_{n2})$

$p_{cr} = 9269.1\text{psi}$

### 3.3.3 General Instability

$L := L_3$ Spacing between effective stiffeners

$$\lambda_2 := \frac{\pi \cdot R}{L}$$

$$\lambda_2 = 1.292$$

$$\beta_{n2}(n) := \frac{\lambda_2^{\,4}}{\left(n^2 - 1 + 0.5 \cdot \lambda_2^{\,2}\right) \cdot \left(n^2 + \lambda_2^{\,2}\right)^2}$$

$$p_o(n) := \frac{E \cdot s \cdot \beta_{n2}(n)}{R}$$

$$p_1(n) := \frac{\left(n^2 - 1\right) \cdot E \cdot I_e}{R_o^{\,3} \cdot L_1}$$

$$p_{n1a}(n) := p_o(n) + p_1(n)$$

$n := 2$

Given

$n \geq 2$

$n_2 := \text{Minimize}\left(p_{n1a}, n\right)$

$n_2 = 2.955$ n must be an integer

$n_{2int} := \text{round}\left(n_2, 0\right)$

$n_{2int} = 3$

$$n_{2prime} := \begin{pmatrix} n_{2int} - 1 \\ n_{2int} \\ n_{2int} + 1 \\ n_{2int} + 2 \end{pmatrix}$$

$$p_{g2} := \begin{pmatrix} p_{n1a}\left(n_{2prime_0}\right) \\ p_{n1a}\left(n_{2prime_1}\right) \\ p_{n1a}\left(n_{2prime_2}\right) \\ p_{n1a}\left(n_{2prime_3}\right) \end{pmatrix} \qquad p_{g2} = \begin{pmatrix} 11569 \\ 4651 \\ 6612 \\ 10240 \end{pmatrix} psi$$

$$p_g := \min\left(p_{g2}\right)$$

$$p_g = 4651.4 psi$$

## 2.6 Symmetric Buckling (axisymmetric)

More Definitions

For Elastic-Plastic Region (Eqns are in the program)

$E_s := E$ Secant Modulus = Young's Modulus for elastic region

$E_t := E$ Tangent Modulus = Young's Modulus for elastic region

$\nu_p := \nu$ Poisson's Ratio, elastic-plastic; = Poisson's ratio in elastic

$$\alpha := \sqrt[4]{\frac{3\cdot\left(1-\nu^2\right)}{s^2\cdot R^2}}$$ shape factor

$$\alpha = 0.024\frac{1}{mm}$$

$C_5 := \alpha\cdot L_1$ calculation factor for symmetric buckling

$$C_5 = 1.605$$

$$p_{ast} := \frac{2\cdot s^2\cdot E}{R^2\cdot\sqrt{3\cdot\left(1-\nu^2\right)}}$$ critical pressure, elastic, calculation factor

$$p_{ast} = 8364.876 psi$$

$$G := \frac{p}{p_{ast}}$$

$$C_6 := \frac{1}{2} \cdot \sqrt{1 - G}$$

$$C_7 := \frac{1}{2} \cdot \sqrt{1 + G}$$

$$C_8 := C_5 \cdot C_6$$

$$C_9 := C_5 \cdot C_7$$

$$F_1 := \frac{4}{C_5} \cdot \frac{\cosh(C_8)^2 - \cos(C_9)^2}{\frac{\cosh(C_8) \cdot \sinh(C_8)}{C_6} + \frac{\cos(C_9) \cdot \sin(C_9)}{C_7}}$$

$$F_2 := \frac{\frac{\cosh(C_8) \cdot \sin(C_9)}{C_7} + \frac{\sinh(C_8) \cdot \cos(C_9)}{C_6}}{\frac{\cosh(C_8) \cdot \sinh(C_8)}{C_6} + \frac{\cos(C_9) \cdot \sin(C_9)}{C_7}}$$

$$F_3 := \sqrt{\frac{3}{1 - \nu^2}} \cdot \frac{\frac{\cos(C_9) \cdot \sin(C_9)}{C_7} - \frac{\cosh(C_8) \cdot \sinh(C_8)}{C_6}}{\frac{\cosh(C_8) \cdot \sinh(C_8)}{C_6} + \frac{\cos(C_9) \cdot \sin(C_9)}{C_7}}$$

$$F_4 := \sqrt{\frac{3}{1 - \nu^2}} \cdot \frac{\frac{\cosh(C_8) \cdot \sin(C_9)}{C_7} - \frac{\sinh(C_8) \cdot \cos(C_9)}{C_6}}{\frac{\cosh(C_8) \cdot \sinh(C_8)}{C_6} + \frac{\cos(C_9) \cdot \sin(C_9)}{C_7}}$$

$$C_{10} := \frac{\left(1 - \frac{\nu}{2}\right) \cdot \frac{A}{s \cdot L_1}}{\frac{A}{s \cdot L_1} + \frac{b}{L_1} + \left(1 - \frac{b}{L_1}\right) \cdot F_1}$$

$$C_{11} := \sqrt{\frac{0.91}{1 - \nu^2}}$$

$$\sigma_o := \frac{-p \cdot R}{s}$$

$$\sigma_x := \sigma_o \cdot \left(\frac{1}{2} + C_{10} \cdot C_{11} \cdot F_4\right)$$

$$\sigma_\phi := \sigma_o \cdot \left(1 - C_{10} \cdot F_2 + \nu \cdot C_{10} \cdot C_{11} \cdot F_4\right)$$

$$\sigma_{x1} := \sigma_o \cdot \left(\frac{1}{2} - C_{10} \cdot C_{11} \cdot F_4\right)$$

$$\sigma_x = -8.275 \times 10^8 \, Pa$$

$$\sigma_{\phi 1} := \sigma_o \cdot \left(1 - C_{10} \cdot F_2 - \nu \cdot C_{10} \cdot C_{11} \cdot F_4\right)$$

$$\sigma_\phi = -1.013 \times 10^9 \, Pa$$

if the calculated stress is $\geq .8$ of the yield stress, then must use $E_t$, $E_s$, etc

$$.8 \cdot k = 78.8 ksi$$

$$K_o := \frac{\sigma_\phi}{\sigma_x}$$

$$\sigma_i := \sqrt{\sigma_x^{\,2} + \sigma_\phi^{\,2} - \sigma_x \cdot \sigma_\phi}$$

$$\sigma_i = 135.505 ksi$$

$$\sigma := -K_o \cdot \sigma_x$$

$$\sigma = 147 ksi$$

$$\varepsilon_1 := \frac{\sigma}{E}$$

$$\varepsilon_1 = 4.898 \times 10^{-3}$$

$$\sigma := k \cdot \left(.8 + .2 \cdot \tanh\left(5 \cdot \frac{E}{k} \cdot \varepsilon_1 - 4\right)\right)$$

$$\sigma = 98461.1 psi$$

$$\varepsilon := \frac{k}{E}\cdot\left(0.8 + 0.2\cdot \operatorname{atanh}\left(5\cdot\frac{\sigma}{k} - 4\right)\right)$$

$$\varepsilon = 4.898\times 10^{-3}$$

$$E_s := \frac{k}{\varepsilon}\cdot\left[0.8 + 0.2\cdot\left(\tanh\left(5\cdot\frac{E}{k}\cdot\varepsilon - 4\right)\right)^2\right]$$

$$E_s = 2.009\times 10^4\ \text{ksi}$$

$$E_t := E\cdot\left(1 - \tanh\left(5\cdot\frac{E}{k}\cdot\varepsilon - 4\right)\right)$$

$$E_t = 59.275\text{ksi}$$

$$\nu_p := \left[\frac{1}{2} - \left(\frac{1}{2} - \nu\right)\cdot\frac{E_s}{E}\right]$$

$$\nu_p = 0.366$$

$$E \leftarrow \sqrt{E_s\cdot E_t}$$

$$p_{aa} := \frac{2\cdot s^2\cdot E_s}{R^2\cdot\sqrt{3\cdot\left(1 - \nu_p^{\,2}\right)}}$$

$$K_1 := \left(1 - K_o + K_o^{\,2}\right)$$

$$H_4 := \frac{1 - \frac{E_t}{E_s}}{4\cdot\left(1 - \nu_p^{\,2}\right)\cdot K_1}$$

$$H_3 := \left[\left(1 - 2\cdot\nu_p\right) - \left(2 - \nu_p\right)\cdot K_o\right]$$

$$H_2 := \left[\left(2 - \nu_p\right) - \left(1 - 2\cdot\nu_p\right)\cdot K_o\right]$$

$$H_1 := \left[1 + H_4\cdot\left[H_2^{\,2} - 3\cdot\left(1 - \nu_p^{\,2}\right)\right]\right]$$

$$C_3 := \left(1 + \frac{H_2 \cdot H_3 \cdot H_4}{\nu_p \cdot H_1}\right)$$

$$C_3 = -0.748$$

$$C_2 := \left(1 - \frac{H_3^2 \cdot H_4}{H_1}\right)$$

$$C_1 := \left(1 - \frac{H_2^2 \cdot H_4}{H_1}\right)$$

$$C_0 := \sqrt{\frac{C_1 \cdot C_2 - \nu_p^2 \cdot C_3^2}{1 - \nu_p^2}}$$

$$\alpha_1 := \sqrt[4]{\frac{3 \cdot \left[\frac{C_2}{C_1} - \left(\nu_p \cdot \frac{C_3}{C_1}\right)^2\right]}{s^2 \cdot R^2}}$$

$$\text{trial} := \frac{\alpha_1 \cdot L_1}{\pi}$$

$$\text{trial} = 0.173$$

$$m := 1$$

$$\text{trial2} := \sqrt{\frac{m}{2} \cdot (m + 1)}$$

$$\text{trial2} = 1$$

iterate on m until trial is $\leq$ trial2

$$p_m := p_{aa} \cdot C_0 \cdot \left[\left(\frac{\alpha_1 \cdot L_1}{\pi \cdot m}\right)^2 + \frac{1}{4} \cdot \left(\frac{\pi \cdot m}{\alpha_1 \cdot L_1}\right)^2\right]$$

$$p_m = 2931.4\text{psi}$$

$$p \equiv 2931\text{psi}$$

iterate on p until $p_m$ is equal to p

**Summary**

Axisymmetric Buckling

$p_m = 2931.4psi$

Lobar Buckling

$p_{cr} = 9269.1psi$

General Instability

$p_g = 4651.4psi$

## Society of Naval Architects and Marine Engineers

### Submersible Vehicle Systems Design

$ksi := 1000psi$

### Input Section

| | |
|---|---|
| $L_f := 2.665in$ | Length between frames |
| $L_b := 42.129in$ | Length between bulkheads |
| $R := 17.3285in$ | Radius of cylinder to centerline of shell |
| $t := 0.263in$ | shell thickness |
| $R_0 := R + .5 \cdot t$ | radius to outside of shell |

$R_0 = 17.46in$

| | |
|---|---|
| $E := 30000ksi$ | modulus of elasticity |
| $\sigma_y := 98.5 \cdot ksi$ | minimum yield stress of material |
| $\mu := 0.3$ | Poisson's ratio |

### Ring Stiffeners

| | |
|---|---|
| $t_w := 0.198in$ | thickness of web of ring stiffener |
| $depth := 1.025in$ | total height of ring stiffener |
| $bf := 0.763in$ | breadth of ring stiffener |
| $d := 0.263in$ | ring stiffener flange thickness |
| $b_2 := bf - t_w$ | breadth of ring stiffener minus the web thickness |

$c_1 := .5 \cdot \left( \frac{t_w \cdot depth^2 + b_2 \cdot d^2}{t_w \cdot depth + b_2 \cdot d} \right)$ first centroidal height of ring stiffener

$c_1 = 0.351in$

$c_2 := depth - c_1$ second centroidal height of ring stiffener

$c_2 = 0.674in$

$h := c_1 - d$ distance from centroid of ring stiffener to nearest edge of flange

$h = 0.088in$

$R_r := R - .5 \cdot t - c_2$ radius to centroid of ring stiffener

$R_r = 16.523in$

$A_r := (t_w \cdot depth + b_2 \cdot d)$ cross-sectional area of ring stiffener

$A_r = 0.352in^2$

$I_r := \left(\frac{1}{3}\right) \cdot \left(bf \cdot c_1^3 - b_2 \cdot h^3 + t_w \cdot c_2^3\right)$ moment of inertia of ring stiffener about its centroidal axis

$I_r = 0.031in^4$

**Combined Plate and Ring Stiffener**

$A_p := L_f \cdot t$ area of effective plate

$A_{sp} := A_p + A_r$ area of plate and ring stiffener

$H_c := depth + t$ height of combined plate and ring stiffener

$B_1 := L_f - t_w$ plate length minus the web thickness

$$c_{1c} := .5\left[\frac{t_w \cdot H_c^{\,2} + B_1 \cdot t^2 + b_2 \cdot d \cdot (2 \cdot H_c - d)}{t_w \cdot H_c + B_1 \cdot t + d \cdot b_2}\right]$$

neutral axis of combined plate and ring stiffener from outer fiber of plate ($R_0$)

$$c_{1c} = 0.4\text{in}$$

$$R_c := R + .5 \cdot h - c_{1c}$$

radius to centroidal axis of combined ring stiffener and shell

$$R_c = 16.972\text{in}$$

$$I_e := \frac{1}{3} \cdot \left[L_f \cdot c_{1c}^{\,3} - B_1 \cdot (c_{1c} - t)^3 + bf \cdot (H_c - c_{1c})^3 - (bf - t_w) \cdot (H_c - c_{1c} - d)^3\right]$$

moment of inertia of combined plate and shell

$$I_e = 0.187\text{in}^4$$

**a. Axisymmetric yielding**

$$B := \frac{t_w \cdot t}{A_r + t_w \cdot t}$$

$$B = 0.129$$

$$\theta := 10 \cdot \left[12 \cdot \left(1 - \mu^2\right)\right]^{\frac{1}{4}} \cdot \left(\frac{L_f}{2 \cdot R}\right) \cdot \left(\frac{50 \cdot t}{R}\right)^{-\left(\frac{1}{2}\right)}$$

$$\theta = 1.605$$

$$N := \frac{\cosh(\theta) - \cos(\theta)}{\sinh(\theta) + \sin(\theta)}$$

$$N = 0.774$$

$$\beta := \frac{11 \cdot N}{\sqrt{50 \cdot \frac{t}{R}}} \cdot \left( \frac{t^2}{A_r + t_w \cdot t} \right)$$

$\beta = 1.675$

$$H := -\left( \frac{3 \cdot \sinh\left(\frac{\theta}{2}\right) \cdot \cos\left(\frac{\theta}{2}\right) + \cosh\left(\frac{\theta}{2}\right) \cdot \sin\left(\frac{\theta}{2}\right)}{\sinh(\theta) + \sin(\theta)} \right)$$

$H = -0.833$

$$p_y := \frac{\sigma_y \cdot \frac{t}{R}}{1 + H \cdot \left( \frac{0.85 - B}{1 + \beta} \right)}$$

$p_y = 1927.7\text{psi}$

## b. Lobar Buckling

$$p_b := \left[ \frac{2.42 \cdot E}{\left(1 - \mu^2\right)^{\frac{3}{4}}} \right] \cdot \left[ \frac{\left(\frac{t}{2 \cdot R}\right)^{\frac{5}{2}}}{\left[ \frac{L_f}{2 \cdot R} - 0.45 \cdot \left(\frac{t}{2 \cdot R}\right)^{\frac{1}{2}} \right]} \right]$$

$p_b = 10369.943\text{psi}$

## c. General Instability

$$m := \frac{\pi \cdot R}{L_b}$$

$n := 1$

$$p_{cr1}(n) := \frac{E \cdot t}{R} \cdot \frac{m^4}{\left(n^2 - 1 + \frac{m^2}{2}\right) \cdot \left(n^2 + m^2\right)^2} + \frac{\left(n^2 - 1\right) \cdot E \cdot I_e}{R^3 \cdot L_f}$$

Given

$n \geq 1$

$n_2 := \text{Minimize}(p_{cr1}, n)$

$n_2 = 2.974$ n must be an integer

$n_{2int} := \text{round}(n_2, 0)$

$n_{2int} = 3$

$$n_{2first} := \begin{cases} n_{2int} \cdot 100 & \text{if } n_{2int} = 1 \\ n_{2int} - 1 & \text{otherwise} \end{cases}$$

$n_{2first} = 2$

$$n_{2prime} := \begin{pmatrix} n_{2first} \\ n_{2int} \\ n_{2int} + 1 \\ n_{2int} + 2 \end{pmatrix} \qquad n_{2prime} = \begin{pmatrix} 2 \\ 3 \\ 4 \\ 5 \end{pmatrix}$$

$$p_{cr2} := \begin{pmatrix} p_{cr1}\left(n_{2prime_0}\right) \\ p_{cr1}\left(n_{2prime_1}\right) \\ p_{cr1}\left(n_{2prime_2}\right) \\ p_{cr1}\left(n_{2prime_3}\right) \end{pmatrix} \qquad p_{cr2} = \begin{pmatrix} 11510.622 \\ 4496.065 \\ 6320.305 \\ 9773.51 \end{pmatrix} \text{psi}$$

$p_{cr} := \min(p_{cr2})$

$p_{cr} = 4496.1\text{psi}$

**Summary**

Axisymmetric Buckling

$p_y = 1927.7$psi

Lobar Buckling

$p_b = 10369.9$psi

General Instability

$p_{cr} = 4496.1$psi

## MIT 13A Professional Summer Submarine Design Trends

### PROGRAM TO COMPUTE SUITABILITY OF SUBMARINE DESIGN PARAMETERS.

Ref: "Hull Material Trade Off Study", D Fox, Jan 94

Define input parameters:

$ksi \equiv 1000 psi$

**Global Variable Inputs:**

| | |
|---|---|
| $e \equiv 0.0 \cdot in$ | Eccentricity |

Material:

| | |
|---|---|
| $\sigma_y \equiv 98500 psi$ | Yield Strength |
| $E \equiv 30000 ksi$ | Modulus of Elasticity |
| $\nu \equiv 0.3$ | Poisson's Ratio |

Geometry:

| | |
|---|---|
| $D \equiv 34.657 in$ | shell diameter |
| $R \equiv \frac{D}{2}$ | shell radius |
| $t_f \equiv .263 in$ | flange tickness |
| $L_f \equiv 2.665 in$ | frame spacing |
| $w_f \equiv .763 in$ | flange width |
| $L_s \equiv 42.129 in$ | bulkhead spacing |
| $t_w \equiv .198 in$ | web thickness |
| $t_p \equiv 0.263 in$ | shell thickness |
| $h_w \equiv .762 in$ | web height |

$R_l := R - \frac{t_p}{2}$ Frame Radius

$R_l = 17.197in$

$A_f := t_f \cdot w_f$ Frame flange, web area:

$A_w := t_w \cdot h_w$

$A := A_f + A_w$ Frame Area = Flange + Web

$A = 0.352in^2$

## PART 1 SHELL YIELDING

Von Sanden and Gunther (1952)

PNA Section 8.4

$B := \frac{t_w \cdot t_p}{A + t_w \cdot t_p}$ Area ratio

$\theta := L_f \cdot \left[ \frac{3 \cdot \left(1 - \nu^2\right)}{\left(R \cdot t_p\right)^2} \right]^{\frac{1}{4}}$ Slenderness parameter

$N := \frac{\cosh(\theta) - \cos(\theta)}{\sinh(\theta) + \sin(\theta)}$ Deflection coefficient:

$\beta := \frac{2 \cdot N}{A + t_w \cdot t_p} \cdot \left[ \frac{1}{3 \cdot \left(1 - \nu^2\right)} \right]^{0.25} \cdot \sqrt{R \cdot t_p^{\,3}}$ Frame flexability parameter:

$\beta = 1.676$

$\Gamma := \frac{\left(1 - \frac{\nu}{2}\right) - B}{1 + \beta}$ Frame deflection parameter:

$\Gamma = 0.269$

$$H_M := -2\cdot\frac{\sinh\left(\frac{\theta}{2}\right)\cdot\cos\left(\frac{\theta}{2}\right) + \cosh\left(\frac{\theta}{2}\right)\cdot\sin\left(\frac{\theta}{2}\right)}{\sinh(\theta) + \sin(\theta)}$$

Bending effect(mem):

$$H_M = -0.934$$

$$H_E := -2\cdot\left(\frac{3}{1-\nu^2}\right)^{0.5}\cdot\frac{\sinh\left(\frac{\theta}{2}\right)\cdot\cos\left(\frac{\theta}{2}\right) - \cosh\left(\frac{\theta}{2}\right)\cdot\sin\left(\frac{\theta}{2}\right)}{\sinh(\theta) + \sin(\theta)}$$

Bending effect (bend):

$$H_E = 0.368$$

$$K := \frac{\sinh(\theta) - \sin(\theta)}{\sinh(\theta) + \sin(\theta)}$$

Bending efffect near frame:

$$p_{crl} := \left|\begin{array}{l}
f_y \leftarrow \sigma_y \\
P_0 \leftarrow 1\ \text{psi} \\
P_1 \leftarrow 1000\ \text{psi} \\
P_2 \leftarrow 5000\ \text{psi} \\
\text{delta} \leftarrow 5\ \text{psi} \\
\text{limit} \leftarrow 1\ \text{psi} \\
\text{conv} \leftarrow 1\ \text{psi} \\
j \leftarrow 0 \\
\text{while } j \le 200 \\
\quad \left|\begin{array}{l}
\text{for } i \in 0..2 \\
\quad \left|\begin{array}{l}
\sigma_{\phi\phi so} \leftarrow \frac{-P_i\cdot R}{t_p}\cdot\left[1 + \Gamma\cdot\left(H_M + \nu\cdot H_E\right)\right] \\
\sigma_{\phi\phi si} \leftarrow \frac{-P_i\cdot R}{t_p}\cdot\left[1 + \Gamma\cdot\left(H_M - \nu\cdot H_E\right)\right] \\
\sigma_{xxso} \leftarrow \frac{-P_i\cdot R}{t_p}\cdot\left(0.5 + \Gamma\cdot H_E\right) \\
\sigma_{xxsi} \leftarrow \frac{-P_i\cdot R}{t_p}\cdot\left(0.5 - \Gamma\cdot H_E\right) \\
\sigma_{\phi\phi fo} \leftarrow \frac{-P_i\cdot R}{t_p}\cdot\left[1 - \Gamma\cdot\left[1 + \nu\cdot\left(\frac{3}{1-\nu^2}\right)^{0.5}\cdot K\right]\right] \\
\sigma_{\phi\phi fi} \leftarrow \frac{-P_i\cdot R}{t_p}\cdot\left[1 - \Gamma\cdot\left[1 - \nu\cdot\left(\frac{3}{1-\nu^2}\right)^{0.5}\cdot K\right]\right]
\end{array}\right.
\end{array}\right.
\end{array}\right.$$

$$\sigma_{\phi\phi fo} \leftarrow \frac{-P_i \cdot R}{t_p} \cdot \left[1 - \Gamma \cdot \left[1 + \nu \cdot \left(\frac{3}{1-\nu^2}\right)^{0.5} \cdot K\right]\right]$$

$$\sigma_{\phi\phi fi} \leftarrow \frac{-P_i \cdot R}{t_p} \cdot \left[1 - \Gamma \cdot \left[1 - \nu \cdot \left(\frac{3}{1-\nu^2}\right)^{0.5} \cdot K\right]\right]$$

$$\sigma_{xxfo} \leftarrow \frac{-P_i \cdot R}{t_p} \cdot \left[0.5 - \Gamma \cdot \left(\frac{3}{1-\nu^2}\right)^{0.5} \cdot K\right]$$

$$\sigma_{xxfi} \leftarrow \frac{-P_i \cdot R}{t_p} \cdot \left[0.5 + \Gamma \cdot \left(\frac{3}{1-\nu^2}\right)^{0.5} \cdot K\right]$$

$$\sigma_{sy} \leftarrow \begin{pmatrix} \sigma_{\phi\phi so} \\ \sigma_{\phi\phi si} \\ \sigma_{xxso} \\ \sigma_{xxsi} \\ \sigma_{\phi\phi fo} \\ \sigma_{\phi\phi fi} \\ \sigma_{xxfo} \\ \sigma_{xxfi} \end{pmatrix}$$

$$\sigma_1 \leftarrow \sigma_{sy_0}$$

$$\sigma_2 \leftarrow \sigma_{sy_2}$$

$$\sigma_3 \leftarrow \sigma_{sy_5}$$

$$\sigma_4 \leftarrow \sigma_{sy_7}$$

$$\sigma_{SYM} \leftarrow \left(\sigma_1^2 - \sigma_1 \cdot \sigma_2 + \sigma_2^2\right)^{\frac{1}{2}}$$

$$\sigma_{SYF} \leftarrow \left(\sigma_3^2 - \sigma_3 \cdot \sigma_4 + \sigma_4^2\right)^{\frac{1}{2}}$$

$$\sigma_{SY} \leftarrow \max\left(\begin{pmatrix} \sigma_{SYM} \\ \sigma_{SYF} \end{pmatrix}\right)$$

$$stress_i \leftarrow \sigma_{SY}$$

$$test_i \leftarrow |f_y - \sigma_{SY}|$$

$$shel \leftarrow \frac{test_0}{conv}$$

$$dav \leftarrow \frac{test_1}{conv}$$

$$\text{break if } \left|stress_1 - f_y\right| \le limit$$

$$P_0 \leftarrow P_1 \text{ if } shel \cdot dav > 0$$

$$P_2 \leftarrow P_1 \text{ if } shel \cdot dav < 0$$

$$P_1 \leftarrow P_0 + \frac{|P_2 - P_0|}{2}$$

$$j \leftarrow j + 1$$

$$out_0 \leftarrow \frac{P_1}{conv}$$

$$out_1 \leftarrow j - 1$$

out

$$p_{cr1} = \begin{pmatrix} 1994.11 \\ 16 \end{pmatrix}$$

$$p_{crit} := p_{cr1_0} \cdot 1psi$$

$$p_{crit} = 1994.1psi$$

## PART 2 LOBAR BUCKLING

Windenberg Approx of Von Mises (1933)

Assumes n lobes = Pi*D/L

Collapse pressure:

$$P_{cLB} := \frac{2.42 \cdot E \cdot \left(\frac{t_p}{D}\right)^{2.5}}{\left(\frac{L_f}{D} - 0.45 \cdot \sqrt{\frac{t_p}{D}}\right) \cdot \left(1 - \nu^2\right)^{0.75}}$$

$$P_{cLB} = 10369.9psi$$

## PART 3 GENERAL INSTABILITY

Corrected Bryant Formula (1954) for better model test correlation

Pressure loading is:

$$P := 6000psi$$

Compute *effective* frame spacing:

$$\gamma := \frac{P}{2 \cdot E} \cdot \left(\frac{R}{t_p}\right)^2 \cdot \sqrt{3 \cdot \left(1 - \nu^2\right)}$$

$$\gamma = 0.717$$

Compute clear length:

$$L_c := L_f - t_w$$

$n_1 := 0.5\cdot\sqrt{1-\gamma}$

$n_1 = 0.266$

Web thickness:

$n_2 := 0.5\cdot\sqrt{1+\gamma}$

$n_2 = 0.655$

$t_w = 0.198in$

$$F_1 := \frac{4}{\theta}\cdot\left|\frac{\cosh(n_1\cdot\theta)^2 - \cos(n_2\cdot\theta)^2}{\frac{\cosh(n_1\cdot\theta)\cdot\sinh(n_1\cdot\theta)}{n_1} + \frac{\cos(n_2\cdot\theta)\cdot\sin(n_2\cdot\theta)}{n_2}}\right|$$ must be less than 1.00

$F_1 = 0.958$

$F_1$ is almost a linear decreasing function for pressures from 1 to 10000 psi with an average value of 0.91. This will be used in the following analysis as the pressure is the unknown and therefore the above equations cannot be directly used.

$F_1 := 0.96$

$L_{eff} := L_c\cdot F_1 + t_w$ Effective shell plate length:

$L_{eff} = 2.566in$

Theoretical critical lobe number values are:

$i := 0..2$

$n := \begin{pmatrix} 2 \\ 3 \\ 4 \end{pmatrix}$ Circumferential Lobes

$A_{eff} := L_{eff}\cdot t_p$ Effective plate area:

$A_{eff} = 0.675in^2$

$m := \pi \cdot \frac{R}{L_s}$ Longitudinal Lobes:

$m = 1.292$

$y_{na} := \frac{\left(\frac{h_w + t_f}{2}\right) \cdot A_f - \left(\frac{h_w + t_p}{2}\right) \cdot A_{eff}}{A_{eff} + A_w + A_f}$ Frame-plate neutral axis (ref web centre+ toward flange):

$y_{na} = -0.237in$

Uses Parallel Axis Theorm: Icor = I + Ad2

Moments of inertia for plate,flange,web:

$I_p := \frac{L_{eff} \cdot t_p^3}{12}$

$I_w := \frac{t_w \cdot h_w^3}{12}$

$I_f := \frac{w_f \cdot t_f^3}{12}$

$I_{pcor} := I_p + A_{eff} \cdot \left[\left(\frac{t_p + h_w}{2}\right) + y_{na}\right]^2$

$I_{wcor} := I_w + A_w \cdot (y_{na})^2$

$I_{fcor} := I_f + A_f \cdot \left(\frac{t_f + h_w}{2} - y_{na}\right)^2$

Total:

$I_{eff} := I_{pcor} + I_{wcor} + I_{fcor}$ Moment of Inertia corrected for neutral axis.

$I_{eff} = 0.185in^4$

The critical Elastic General Instability pressure is:

$$P_{cGI_i} := \frac{E \cdot t_p}{R} \cdot \frac{m^4}{\left[\left(n_i\right)^2 - 1 + \frac{m^2}{2}\right] \cdot \left[\left(n_i\right)^2 + m^2\right]^2} + \frac{\left[\left(n_i\right)^2 - 1\right] \cdot E \cdot I_{eff}}{R^3 \cdot L_f}$$

Min Pressure:

$$P_{cGI} = \begin{pmatrix} 1.15 \times 10^4 \\ 4.46 \times 10^3 \\ 6.253 \times 10^3 \end{pmatrix} psi$$

$$n := \begin{pmatrix} 2 \\ 3 \\ 4 \end{pmatrix}$$

$$P_{cGI} := \min(P_{cGI})$$

$$P_{cGI} = 4460.2 psi$$

$$n_{gi} := 3$$

**Summary**

Axisymmetric Buckling

$P_{crit} = 1994.1 psi$

Lobar Buckling

$P_{cLB} = 10369.9 psi$

General Instability

$P_{cGI} = 4460.2 psi$

$n_{gi} = 3$

## Analytic Solution

### Definitions

$ksi := 6.89475710^{6}Pa$

| | |
|---|---|
| $E := 30000ksi$ | Modulus of Elasticity |
| $R := 17.3285in$ | Radius of cylinder to centerline of shell |
| $D := 2 \cdot R$ | Diameter of cylinder |
| $\sigma_y := 98.5ksi$ | Yield strength |
| $L := 2.665in$ | Length between stiffener centers |
| $L_b := 42.129in$ | Distance between bulkheads |
| $\mu := .3$ | Poison's ratio for Fe/Steel |
| $t := 0.263in$ | Shell thickness |

### Ring Stiffeners

| | |
|---|---|
| $t_w := 0.198in$ | thickness of web of ring stiffener |
| $H := 1.025in$ | height of ring stiffener |
| $b := t_w$ | faying width of stiffener (from P&S for I beam stiffener) |
| $bf := 0.763in$ | breadth of ring stiffener |
| $b_2 := bf - t_w$ | breadth of ring stiffener minus the web thickness |
| $d := 0.263in$ | ring stiffener flange thickness |
| $L_{bnash} := L - bf$ | distance from flange edges |

$c_1 := .5 \cdot \left( \frac{t_w \cdot H^2 + b_2 \cdot d^2}{t_w \cdot H + b_2 \cdot d} \right)$ first centroidal height of ring stiffener

$c_1 = 0.351in$

$c_2 := H - c_1$ second centroidal height of ring stiffener

$c_2 = 0.674in$

$h := c_1 - d$ distance from centroid of ring stiffener to nearest edge of flange

$h = 0.088in$

$R_r := R - .5 \cdot t - c_2$ radius to centroid of ring stiffener

$R_r = 16.523in$

$A_r := (t_w \cdot H + b_2 \cdot d)$ cross-sectional area of ring stiffener

$A_r = 0.352in^2$

$I_r := \left(\frac{1}{3}\right) \cdot \left(bf \cdot c_1^{\,3} - b_2 \cdot h^3 + t_w \cdot c_2^{\,3}\right)$ moment of inertia of ring stiffener about its centroidal axis

$I_r = 0.031in^4$

$A_{eff} := A_r \cdot \left(\frac{R}{R_r}\right)$ effective area of stiffener eqn [24a] from P&S

$A_{eff} = 0.369in^2$

$\alpha := \frac{A_{eff}}{L \cdot t}$ ratio of effective frame area to shell area eqn [62] P&S

$\alpha = 0.526$

$\beta := \frac{b}{L}$ ratio of faying width to frame spacing eqn [62] P&S

$\beta = 0.074$

**Combined Plate and Ring Stiffener**

$A_p := L \cdot t$ area of effective plate

$A_{sp} := A_p + A_r$ area of plate and ring stiffener

$H_c := H + t$ height of combined plate and ring stiffener

$H_c = 0.107ft$

$B_1 := L - t_w$ plate length minus the web thickness

$$c_{1c} := .5\left[\frac{t_w \cdot H_c^2 + B_1 \cdot t^2 + b_2 \cdot d \cdot (2 \cdot H_c - d)}{t_w \cdot H_c + B_1 \cdot t + d \cdot b_2}\right]$$

neutral axis of combined plate and ring stiffener

from outer fiber of plate (R0)

$c_{1c} = 0.4in$

$R_c := R - .5 \cdot t - c_{1c}$ radius to centroidal axis of combined ring stiffener and shell

$R_c = 16.797in$

$$I_e := \frac{1}{3} \cdot \left[L \cdot c_{1c}^3 - B_1 \cdot (c_{1c} - t)^3 + bf \cdot (H_c - c_{1c})^3 - (bf - t_w) \cdot (H_c - c_{1c} - d)^3\right]$$

moment of inertia of combined plate and shell

$I_e = 0.187in^4$

**a. Buckling of unreinforced shells**

von Mises bucking pressure:

$n := 1$ guess at number of waves around the circumference

$$p_{ur1}(n) := \left(\frac{E \cdot t}{R}\right) \cdot \left[\frac{1}{n^2 + .5 \cdot \left(\frac{\pi \cdot R}{L}\right)^2}\right] \cdot \left[\left[\frac{\left(\frac{\pi \cdot R}{L}\right)^4}{\left[n^2 + \left(\frac{\pi \cdot R}{L}\right)^2\right]^2}\right] + \left[\frac{\left(\frac{t}{R}\right)^2}{12 \cdot \left(1 - \mu^2\right)}\right] \cdot \left[n^2 + \left(\frac{\pi \cdot R}{L}\right)^2\right]^2\right]$$

Given

$n \geq 1$

$n_1 := \text{Minimize}(p_{ur1}, n)$

$n_1 = 10.906$ n must be an integer

$n_{1int} := \text{round}(n_1, 0)$

$n_{1int} = 11$

$$n_{1prime} := \begin{pmatrix} n_{1int} - 1 \\ n_{1int} \\ n_{1int} + 1 \\ n_{1int} + 2 \end{pmatrix}$$

$$p_{ur1} := \begin{pmatrix} p_{ur1}(n_{1prime_0}) \\ p_{ur1}(n_{1prime_1}) \\ p_{ur1}(n_{1prime_2}) \\ p_{ur1}(n_{1prime_3}) \end{pmatrix}$$

$p_{ur} := \min(p_{ur1})$

$p_{ur} = 9272.3\text{psi}$

## b. Axisymmetric Buckling

$$
\begin{aligned}
p_{cab} := \;& \gamma \leftarrow 0 \\
& \text{limit} \leftarrow 1\text{psi} \\
& \text{test} \leftarrow 1\text{psi} \\
& \text{conv} \leftarrow 1\text{psi} \\
& j \leftarrow 0 \\
& \text{while } j \le 1 \\
& \quad \eta_1 \leftarrow \frac{1}{2}\cdot\sqrt{1-\gamma} \\
& \quad \eta_2 \leftarrow \frac{1}{2}\cdot\sqrt{1+\gamma} \\
& \quad \theta \leftarrow \sqrt[4]{3\cdot\left(1-\mu^2\right)}\cdot\frac{L}{\sqrt{R\cdot t}} \\
& \quad F_1 \leftarrow \frac{4}{\theta}\cdot\frac{\cosh\left(\eta_1\cdot\theta\right)^2-\cos\left(\eta_2\cdot\theta\right)^2}{\dfrac{\cosh\left(\eta_1\cdot\theta\right)\cdot\sinh\left(\eta_1\cdot\theta\right)}{\eta_1}+\dfrac{\cos\left(\eta_2\cdot\theta\right)\cdot\sin\left(\eta_2\cdot\theta\right)}{\eta_2}} \\
& \quad F_2 \leftarrow \frac{\dfrac{\cosh\left(\eta_1\cdot\theta\right)\cdot\sin\left(\eta_2\cdot\theta\right)}{\eta_2}+\dfrac{\sinh\left(\eta_1\cdot\theta\right)\cdot\cos\left(\eta_2\cdot\theta\right)}{\eta_1}}{\dfrac{\cosh\left(\eta_1\cdot\theta\right)\cdot\sinh\left(\eta_1\cdot\theta\right)}{\eta_1}+\dfrac{\cos\left(\eta_2\cdot\theta\right)\cdot\sin\left(\eta_2\cdot\theta\right)}{\eta_2}} \\
& \quad F_3 \leftarrow \sqrt{\frac{3}{1-\mu^2}}\cdot\frac{\dfrac{\cos\left(\eta_2\cdot\theta\right)\cdot\sin\left(\eta_2\cdot\theta\right)}{\eta_2}-\dfrac{\cosh\left(\eta_1\cdot\theta\right)\cdot\sinh\left(\eta_1\cdot\theta\right)}{\eta_1}}{\dfrac{\cosh\left(\eta_1\cdot\theta\right)\cdot\sinh\left(\eta_1\cdot\theta\right)}{\eta_1}+\dfrac{\cos\left(\eta_2\cdot\theta\right)\cdot\sin\left(\eta_2\cdot\theta\right)}{\eta_2}} \\
& \quad F_4 \leftarrow \sqrt{\frac{3}{1-\mu^2}}\cdot\frac{\dfrac{\cosh\left(\eta_1\cdot\theta\right)\cdot\sin\left(\eta_2\cdot\theta\right)}{\eta_2}-\dfrac{\sinh\left(\eta_1\cdot\theta\right)\cdot\cos\left(\eta_2\cdot\theta\right)}{\eta_1}}{\dfrac{\cosh\left(\eta_1\cdot\theta\right)\cdot\sinh\left(\eta_1\cdot\theta\right)}{\eta_1}+\dfrac{\cos\left(\eta_2\cdot\theta\right)\cdot\sin\left(\eta_2\cdot\theta\right)}{\eta_2}} \\
& \quad A \leftarrow \frac{\left(1-\frac{\mu}{2}\right)\cdot\alpha}{\alpha+\beta+\left(1-\beta\right)\cdot F_1} \\
& \quad \text{denom1} \leftarrow A^2\cdot\left[F_2^{\,2}+F_2\cdot F_4\cdot\left(1-2\cdot\mu\right)\cdot\left(\sqrt{\frac{0.91}{1-\mu^2}}\right)+F_4^{\,2}\cdot\left(1-\mu+\mu^2\right)\cdot\left(\frac{0.91}{1-\mu^2}\right)\right] \\
& \quad \text{denom2} \leftarrow \left(\frac{3}{2}\right)\cdot A\cdot\left(F_2-\mu\cdot F_4\cdot\sqrt{\frac{0.91}{1-\mu^2}}\right) \\
& \quad p_{c2} \leftarrow \frac{\sigma_y\cdot\left(\frac{t}{R}\right)}{\sqrt{\frac{3}{4}+\text{denom1}-\text{denom2}}} \\
& \quad \gamma \leftarrow \frac{p_{c2}}{2\cdot E}\cdot\left[\sqrt{3\cdot\left(1-\mu^2\right)}\right]\cdot\left(\frac{R}{t}\right)^2 \\
& \quad \text{break if } \left|p_{c2}-\text{test}\right| \le \text{limit} \\
& \quad \text{test} \leftarrow p_{c2} \\
& \quad j \leftarrow j+1 \\
& \quad \text{out}_0 \leftarrow \frac{p_{c2}}{\text{conv}} \\
& \quad \text{out}_1 \leftarrow j \\
& \text{out}
\end{aligned}
$$

$$p_{cab} = \begin{pmatrix} 2.141 \times 10^3 \\ 2 \end{pmatrix}$$

$$p_{axiy} := p_{cab_0} \cdot 1psi$$

$$p_{axiy} = 2140.7psi$$

**c. Asymmetric Collapse (Lobar buckling)**

Windenberg Approx of Von Mises (1933)

Assumes n lobes = Pi*D/L

$$p_{cLB} := \frac{2.42 \cdot E \cdot \left(\frac{t}{D}\right)^{2.5}}{\left(\frac{L}{D} - 0.45 \cdot \sqrt{\frac{t}{D}}\right) \cdot \left(1 - \mu^2\right)^{0.75}}$$

$$p_{cLB} = 10369.9psi$$

**d. General Instability of shells and rings**

$$\lambda := \frac{\pi \cdot R}{L_b}$$

$$p_{cGI}(n) := \frac{E \cdot t}{R} \cdot \frac{\lambda^4}{\left(n^2 - 1 + \frac{\lambda^2}{2}\right) \cdot \left(n^2 + \lambda^2\right)^2} + \frac{\left(n^2 - 1\right) \cdot E \cdot I_e}{R^3 \cdot L}$$

$n := 1$

Given

$n \geq 1$

$n_2 := \text{Minimize}(p_{cGI}, n)$

$n_2 = 2.974$ n must be an integer

$n_{2int} := \mathrm{round}(n_2, 0)$

$n_{2int} = 3$

$$n_{2prime} := \begin{pmatrix} n_{2int} - 1 \\ n_{2int} \\ n_{2int} + 1 \\ n_{2int} + 2 \end{pmatrix}$$

$$p_{cgi2} := \begin{pmatrix} p_{cGI}(n_{2prime_0}) \\ p_{cGI}(n_{2prime_1}) \\ p_{cGI}(n_{2prime_2}) \\ p_{cGI}(n_{2prime_3}) \end{pmatrix}$$

$p_{cgibryant} := \min(p_{cgi2})$

$p_{cgibryant} = 4496.1\mathrm{psi}$

**Summary**

Lobar Buckling

$p_{cLB} = 10369.9\mathrm{psi}$

Axisymmetric Buckling

$p_{axiy} = 2140.7\mathrm{psi}$

General Instability

$p_{cgibryant} = 4496.1\mathrm{psi}$

$n_{2int} = 3$

This page intentionally left blank

# Appendix C: Codes for Test Cylinder 2.a

## AMERICAN BUREAU OF SHIPPING

Rules for Building and Classing Underwater Vehicles, Systems, and Hyperbaric Facilities

Definitions

$ksi := 1000psi$

$E := 30000ksi$ Modulus of Elasticity

$\nu := 0.3$ Poisson's Ratio

$\sigma_y := 65500psi$ Yield strength

**Shell Parameters**

$L_s := 1.366in$ Distance between stiffeners

$L_c := 8.636in$ Distance between bulkheads

$R := 8.4179in$ Mean radius of shell

$t := 0.0858in$ Thickness of shell

$R_o := R + \frac{t}{2}$ Outer radius of shell

$R_o = 8.461in$

$D_o := 2 \cdot R_o$ Outer Diameter of shell

**Ring Stiffeners**

$t_w := 0.044in$ thickness of web of ring stiffener

$depth := 0.5319in$ height of ring stiffener

$b := t_w$ faying width of stiffener (from P&S for I beam stiffener)

$bf := 0.399in$ breadth of ring stiffener

$b_2 := bf - t_w$ breadth of ring stiffener minus the web thickness

$d := 0.078in$ ring stiffener flange thickness

$L_b := L_s - t_w$ Unsupported spacing between stiffeners

$L_b = 1.322in$

$L := \max(L_s, L_b)$

$L = 1.366in$

$c_1 := .5 \cdot \left( \frac{t_w \cdot depth^2 + b_2 \cdot d^2}{t_w \cdot depth + b_2 \cdot d} \right)$ first centroidal height of ring stiffener

$c_1 = 0.143in$

$c_2 := depth - c_1$ second centroidal height of ring stiffener

$c_2 = 0.389in$

$h := c_1 - d$ distance from centroid of ring stiffener to nearest edge of flange

$R_s := R + .5 \cdot t + c_2$ radius to centroid of ring stiffener

$R_s = 8.85in$

$A_s := (t_w \cdot depth + b_2 \cdot d)$ cross-sectional area of ring stiffener

$A_s = 0.051in^2$

$I_r := \left(\frac{1}{3}\right) \cdot \left(bf \cdot c_1^3 - b_2 \cdot h^3 + t_w \cdot c_2^3\right)$ moment of inertia of ring stiffener about its centroidal axis

$I_r = 1.219 \times 10^{-3} in^4$

$R_f := R + .5 \cdot t + depth$ Radius to tip of the stiffener

$R_f = 8.993in$

## Combined Plate and Ring Stiffener

$$L_e := \min\begin{pmatrix} 1.5\cdot\sqrt{R\cdot t} \\ 0.75\cdot L_s \end{pmatrix}$$

$L_e = 1.025\text{in}$

$A_p := L\cdot t$ area of effective plate

$A_{sp} := A_p + A_s$ area of plate and ring stiffener

$H_c := \text{depth} + t$ height of combined plate and ring stiffener

$H_c = 0.051\text{ft}$

$B_1 := L - t_w$ plate length minus the web thickness

$$c_{1c} := .5\left[\frac{t_w\cdot H_c^{\,2} + B_1\cdot t^2 + b_2\cdot d\cdot(2\cdot H_c - d)}{t_w\cdot H_c + B_1\cdot t + d\cdot b_2}\right]$$

neutral axis of combined plate and ring stiffener from outer fiber of plate ($R_0$)

$c_{1c} = 0.174\text{in}$

$R_c := R - .5\cdot t + c_{1c}$ radius to centroidal axis of combined ring stiffener and shell

$R_c = 8.549\text{in}$

$$I_e := \frac{1}{3}\cdot\left[L\cdot c_{1c}^{\,3} - B_1\cdot(c_{1c} - t)^3 + bf\cdot(H_c - c_{1c})^3 - (bf - t_w)\cdot(H_c - c_{1c} - d)^3\right]$$

moment of inertia of combined plate and shell

$I_e = 0.008\text{in}^4$

## General Equations

$$M := \frac{L}{\sqrt{R\cdot t}}$$

$M = 1.607$

$$\theta := \left[3\cdot\left(1 - \nu^2\right)\right]^{\frac{1}{4}}\cdot M$$

$$\theta = 2.066$$

$$Q := \frac{\theta}{2}$$

$$Q = 1.033$$

$$N := \frac{\cosh(2\cdot Q) - \cos(2\cdot Q)}{\sinh(2\cdot Q) + \sin(2\cdot Q)}$$

$$N = 0.942$$

$$G := 2\cdot\frac{(\sinh(Q)\cdot\cos(Q) + \cosh(Q)\cdot\sin(Q))}{\sinh(2\cdot Q) + \sin(2\cdot Q)}$$

$$G = 0.835$$

$$H := \frac{\sinh(2Q) - \sin(2\cdot Q)}{\sinh(2\cdot Q) + \sin(2Q)}$$

$$H = 0.631$$

**a Inter-Stiffener Strength (6.19.1)**

1) Inter-stiffener strength equations

**This equates to axisymmetric buckling**

$$A := A_S\cdot\left(\frac{R}{R_S}\right)^2$$ External stiffeners Effective area of plate and stiffener

$$A = 0.046\text{in}^2$$

$$F := \frac{A\cdot\left(1 - \frac{\nu}{2}\right)\cdot G}{A + t_W\cdot t + \frac{2N\cdot t\cdot L}{\theta}}$$

$$F = 0.209$$

yield pressure at midbay and midplane of cylinder

$$P_y := \frac{\sigma_y \cdot \frac{t}{R}}{1 - F}$$

$$P_y = 844.1\text{psi}$$

**This corresponds to Lobar buckling**

von Mises buckling pressure for a cylinder

$$P_m := \frac{2.42 \cdot E \cdot \left(\frac{t}{2 \cdot R}\right)^{\frac{5}{2}}}{\left(1 - \nu^2\right)^{\frac{3}{4}} \cdot \left[\frac{L}{2 \cdot R} - 0.45 \cdot \left(\frac{t}{2 \cdot R}\right)^{\frac{1}{2}}\right]}$$

$$P_m = 2947.7\text{psi}$$

maximum allowable working pressure for inter-stiffener strength

$$P_c := \begin{cases} \frac{P_m}{2} & \text{if } \frac{P_m}{P_y} \le 1 \\ P_y \cdot \left(1 - \frac{P_y}{2 \cdot P_m}\right) & \text{if } 1 < \frac{P_m}{P_y} \le 3 \\ \frac{5}{6} \cdot P_y & \text{if } \frac{P_m}{P_y} > 3 \end{cases}$$

$$\frac{P_m}{P_y} = 3.492$$

$$P_c = 703.4\text{psi}$$

$$P_{aits} := P_c \cdot .8$$

$$P_{aits} = 562.7\text{psi}$$

2) longitudinal stress

limiting pressure corresponding to the longitudinal stress at stiffeners reaching yield

No direct correlation to major failure modes

$$\gamma := \frac{A\cdot\left(1-\frac{\nu}{2}\right)}{A + t_w\cdot t + \frac{2\cdot N\cdot t\cdot L}{\theta}}$$

$$P_l := \frac{2\cdot\sigma_y\cdot t}{R}\cdot\left[1+\left(\frac{12}{1-\nu^2}\right)^{\frac{1}{2}}\cdot\gamma\cdot H\right]^{-1}$$

$$P_l = 848.5\text{psi}$$

maximum allowable working pressure for longitudinal stress

$$P_{als} := P_l\cdot .67$$

$$P_{als} = 568.47\text{psi}$$

**b Overall Buckling Strength (6.19.5)**

$$\lambda := \frac{\pi\cdot R}{L_c}$$

$$n := 1$$

$$A_2(n) := n^2 - 1$$

$$A_1(n) := \frac{\lambda^4}{\left(A_2(n)+\frac{\lambda^2}{2}\right)\cdot\left(n^2+\lambda^2\right)^2}$$

$$p_{n1}(n) := \frac{E\cdot t}{R}\cdot A_1(n) + \frac{E\cdot I_e\cdot A_2(n)}{R^3\cdot L}$$

Given

$n \geq 2$

$n_2 := \text{Minimize}(p_{n1}, n)$

$n_2 = 3.957$ n must be an integer

$n_{2int} := \text{round}(n_2, 0)$

$n_{2int} = 4$

$$n_{2first} := \begin{cases} n_{2int} \cdot 100 & \text{if } n_{2int} = 1 \\ n_{2int} - 1 & \text{otherwise} \end{cases}$$

$n_{2first} = 3$

$$n_{2prime} := \begin{pmatrix} n_{2first} \\ n_{2int} \\ n_{2int} + 1 \\ n_{2int} + 2 \end{pmatrix} \qquad n_{2prime_1} = 4$$

$$p_{n2} := \begin{pmatrix} p_{n1}(n_{2prime_0}) \\ p_{n1}(n_{2prime_1}) \\ p_{n1}(n_{2prime_2}) \\ p_{n1}(n_{2prime_3}) \end{pmatrix} \qquad p_{n2} = \begin{pmatrix} 8.609 \times 10^3 \\ 6.498 \times 10^3 \\ 7.797 \times 10^3 \\ 1.054 \times 10^4 \end{pmatrix} \text{psi}$$

$p_n := \min(p_{n2})$

$p_n = 6498.2\text{psi}$

$P_{aol} := p_n \cdot .5$

$P_{aol} = 3.249 \times 10^3 \text{ psi}$

**Summary**

Axisymmetric Buckling

$P_y = 844.1psi$

Lobar Buckling

$P_m = 2947.7psi$

General Instability

$p_n = 6498.2psi$

$n_{2int} = 4$

## Germanischer Lloyd

1988 Edition

Chapter 2 - Submersibles

$MPa := 10^6 Pa$

$ksi := 10^3 psi$

### General Definitions

| | |
|---|---|
| $E := 30000 ksi$ | Modulus of Elasticity |
| $L_1 := 1.366 in$ | stiffener spacing |
| $L_3 := 8.636 in$ | length of cylinder between bulkheads or lines of support |
| $s := 0.0858 in$ | thickness of shell |
| $R := 8.4179 in$ | radius to centerline of shell |
| $\nu := 0.3$ | Poisson's Ratio |
| $k := 65.5 \cdot ksi$ | minimum yield stress of material |

### Stiffener Dimensions

| | |
|---|---|
| $e_f := 0.078 in$ | flange thickness |
| $d_f := .1775 in$ | width of flange from web to edge of flange |
| $b_2 := 2 \cdot d_f$ | |
| $d_w := 0.4539 in$ | Height of web |
| $e_w := 0.044 in$ | web thickness |
| $b := e_w$ | width of stiffener ring in contact with shell |

$A_1 := e_f \cdot (e_w + 2 \cdot d_f) + e_w \cdot d_w$ cross-sectional area of stiffener ring

$A_1 = 0.051 in^2$

$H_{stiff} := d_w + e_f$

$H_{stiff} = 0.532 in$

$$c_1 := \frac{1}{2} \cdot \frac{e_w \cdot H_{stiff}^2 + b_2 \cdot e_f^2}{e_w \cdot H_{stiff} + b_2 \cdot e_f}$$

$c_1 = 0.143 in$

$c_2 := H_{stiff} - c_1$

$c_2 = 0.389 in$

$h_2 := c_1 - e_f$

$h_2 = 0.065 in$

$I_1 := \left(\frac{1}{3}\right) \cdot \left[(e_w + 2 \cdot d_f) \cdot c_1^3 - (2 \cdot d_f) \cdot h_2^3 + e_w \cdot c_2^3\right]$ Centroidal Moment of inertia of ring stiffener

$I_1 = 1.219 \times 10^{-3} in^4$

$e := c_2 + .5 \cdot s$ distance from stiffener centroid to center of shell

$e = 0.432 in$

**Effective Stiffener and Shell**

$L_{etest} := b + \sqrt{2 \cdot R \cdot s}$

$L_{etest} = 31.645 mm$

$$L_e := \begin{cases} L_{etest} & \text{if } L_{etest} \le L_1 \\ L_1 & \text{otherwise} \end{cases}$$ Effective length of shell (eqn 45a,b)

$L_e = 1.246 in$

$$I_e := \frac{A_1 \cdot e^2}{1 + \frac{A_1}{L_e \cdot s}} + I_1 + \frac{L_e \cdot s^3}{12}$$ Moment of Inertia of combined plate and shell

$$I_e = 7.732 \times 10^{-3}\,in^4$$

$H_{stiffc} := H_{stiff} + s$ Total height of stiffener and plate

$H_{stiffc} = 0.618in$

$d_1 := s$

$bs_1 := L_e - e_w$

$$c_{1c} := \frac{1}{2} \cdot \frac{e_w \cdot H_{stiffc}^2 + b_2 \cdot e_f^2 + bs_1 \cdot s \cdot (2 \cdot H_{stiffc} - s)}{e_w \cdot H_{stiffc} + b_2 \cdot e_f + bs_1 \cdot s}$$

$c_{1c} = 0.435in$

$c_{2c} := H_{stiffc} - c_{1c}$

$c_{2c} = 0.183in$

$R_o := R - .5 \cdot s + c_{2c}$ radius of stiffener ring centroid including effect of $L_e$

$R_o = 8.558in$

$$A := A_1 \cdot \frac{R^2}{R_o^2}$$ Modified area of stiffener ring

$A = 0.049in^2$

$e_1 := c_{2c} + .5 \cdot s$

$e_1 = 0.225in$

## 2.4 Asymmetric Buckling (Lobar but not named this)

$$\lambda_1 := \frac{\pi \cdot R}{L_1}$$

$n := 2$ initial guess

$$\beta_{n1}(n) := \frac{\left[\left(\frac{n^2}{\lambda_1^2} + 1\right)^{-2} + \frac{s^2 \cdot \left(n^2 - 1 + \lambda_1^2\right)^2}{12 \cdot R^2 \cdot \left(1 - \nu^2\right)}\right]}{n^2 - 1 + .5 \cdot \lambda_1^2}$$

$$p_{n1}(n) := \frac{E \cdot s \cdot \beta_{n1}(n)}{R}$$

Given

$n \geq 2$

$n_g := \text{Minimize}(p_{n1}, n)$

$n_g = 13.832$ n must be an integer

$n_{gint} := \text{round}(n_g, 0)$

$n_{gint} = 14$

$$n_{gfirst} := \begin{cases} n_{gint} \cdot 100 & \text{if } n_{gint} = 1 \\ n_{gint} - 1 & \text{otherwise} \end{cases}$$

$n_{gfirst} = 13$

$$n_{gprime} := \begin{pmatrix} n_{gfirst} \\ n_{gint} \\ n_{gint} + 1 \\ n_{gint} + 2 \end{pmatrix} \qquad n_{gprime} = \begin{pmatrix} 13 \\ 14 \\ 15 \\ 16 \end{pmatrix}$$

$$p_{n2} := \begin{pmatrix} p_{n1}\left(n_{gprime_0}\right) \\ p_{n1}\left(n_{gprime_1}\right) \\ p_{n1}\left(n_{gprime_2}\right) \\ p_{n1}\left(n_{gprime_3}\right) \end{pmatrix}$$

$$p_{cr} := \min\left(p_{n2}\right)$$

$$p_{cr} = 2814.7\text{psi}$$

### 3.3.3 General Instability

$L := L_3$ Spacing between effective stiffeners

$$\lambda_2 := \frac{\pi \cdot R}{L}$$

$$\lambda_2 = 3.062$$

$$\beta_{n2}(n) := \frac{\lambda_2^{\,4}}{\left(n^2 - 1 + 0.5 \cdot \lambda_2^{\,2}\right) \cdot \left(n^2 + \lambda_2^{\,2}\right)^2}$$

$$p_o(n) := \frac{E \cdot s \cdot \beta_{n2}(n)}{R}$$

$$p_1(n) := \frac{\left(n^2 - 1\right) \cdot E \cdot I_e}{R_o^{\,3} \cdot L_1}$$

$$p_{n1a}(n) := p_o(n) + p_1(n)$$

$n := 2$

Given

$n \geq 2$

$n_2 := \text{Minimize}(p_{n1a}, n)$

$n_2 = 4.01$ n must be an integer

$n_{2int} := \text{round}(n_2, 0)$

$n_{2int} = 4$

$$n_{2prime} := \begin{pmatrix} n_{2int} - 1 \\ n_{2int} \\ n_{2int} + 1 \\ n_{2int} + 2 \end{pmatrix}$$

$$p_{g2} := \begin{pmatrix} p_{n1a}(n_{2prime_0}) \\ p_{n1a}(n_{2prime_1}) \\ p_{n1a}(n_{2prime_2}) \\ p_{n1a}(n_{2prime_3}) \end{pmatrix} \qquad p_{g2} = \begin{pmatrix} 8.442\times 10^3 \\ 6.185\times 10^3 \\ 7.296\times 10^3 \\ 9.812\times 10^3 \end{pmatrix} \text{psi}$$

$p_g := \min(p_{g2})$

$p_g = 6184.9\text{psi}$

## 2.6 Symmetric Buckling (axisymmetric)

More Definitions

Default values for Elastic-Plastic Region (Eqns are below)

$E_s := E$ Secant Modulus = Young's Modulus for elastic region

$E_t := E$ Tangent Modulus = Young's Modulus for elastic region

$\nu_p := \nu$ Poisson's Ratio, elastic-plastic; = Poisson's ratio in elastic

$$\alpha := \sqrt[4]{\frac{3\cdot\left(1-\nu^2\right)}{s^2\cdot R^2}}$$ shape factor

$$\alpha = 0.06\frac{1}{mm}$$

$$C_5 := \alpha\cdot L_1$$ calculation factor for symmetric buckling

$$C_5 = 2.066$$

$$p_{ast} := \frac{2\cdot s^2\cdot E}{R^2\cdot\sqrt{3\cdot\left(1-\nu^2\right)}}$$ critical pressure, elastic, calculation factor

$$p_{ast} = 3772.567psi$$

Must guess pressure and then change when compared to $p_m$ at bottom of calculation

$$G := \frac{p}{p_{ast}}$$

$$C_6 := \frac{1}{2}\cdot\sqrt{1-G}$$

$$C_7 := \frac{1}{2}\cdot\sqrt{1+G}$$

$$C_8 := C_5\cdot C_6$$

$$C_9 := C_5\cdot C_7$$

$$F_1 := \frac{4}{C_5}\cdot\frac{\cosh\left(C_8\right)^2-\cos\left(C_9\right)^2}{\frac{\cosh\left(C_8\right)\cdot\sinh\left(C_8\right)}{C_6}+\frac{\cos\left(C_9\right)\cdot\sin\left(C_9\right)}{C_7}}$$

$$F_2 := \frac{\frac{\cosh\left(C_8\right)\cdot\sin\left(C_9\right)}{C_7}+\frac{\sinh\left(C_8\right)\cdot\cos\left(C_9\right)}{C_6}}{\frac{\cosh\left(C_8\right)\cdot\sinh\left(C_8\right)}{C_6}+\frac{\cos\left(C_9\right)\cdot\sin\left(C_9\right)}{C_7}}$$

$$F_3 := \sqrt{\frac{3}{1-\nu^2}} \cdot \frac{\dfrac{\cos(C_9)\cdot\sin(C_9)}{C_7} - \dfrac{\cosh(C_8)\cdot\sinh(C_8)}{C_6}}{\dfrac{\cosh(C_8)\cdot\sinh(C_8)}{C_6} + \dfrac{\cos(C_9)\cdot\sin(C_9)}{C_7}}$$

$$F_4 := \sqrt{\frac{3}{1-\nu^2}} \cdot \frac{\dfrac{\cosh(C_8)\cdot\sin(C_9)}{C_7} - \dfrac{\sinh(C_8)\cdot\cos(C_9)}{C_6}}{\dfrac{\cosh(C_8)\cdot\sinh(C_8)}{C_6} + \dfrac{\cos(C_9)\cdot\sin(C_9)}{C_7}}$$

$$C_{10} := \frac{\left(1-\dfrac{\nu}{2}\right)\cdot\dfrac{A}{s\cdot L_1}}{\dfrac{A}{s\cdot L_1} + \dfrac{b}{L_1} + \left(1-\dfrac{b}{L_1}\right)\cdot F_1}$$

$$C_{11} := \sqrt{\frac{0.91}{1-\nu^2}}$$

$$\sigma_o := \frac{-p\cdot R}{s}$$

$$\sigma_x := \sigma_o\cdot\left(\frac{1}{2} + C_{10}\cdot C_{11}\cdot F_4\right)$$

$$\sigma_x = -4.675\times 10^8\ \text{Pa}$$

$$\sigma_\phi := \sigma_o\cdot\left(1 - C_{10}\cdot F_2 + \nu\cdot C_{10}\cdot C_{11}\cdot F_4\right)$$

$$\sigma_\phi = -5.789\times 10^8\ \text{Pa}$$

$$\sigma_{x1} := \sigma_o\cdot\left(\frac{1}{2} - C_{10}\cdot C_{11}\cdot F_4\right)$$

$$\sigma_{x1} = -2.292\times 10^8\ \text{Pa}$$

$$\sigma_{\phi 1} := \sigma_o\cdot\left(1 - C_{10}\cdot F_2 - \nu\cdot C_{10}\cdot C_{11}\cdot F_4\right)$$

$$\sigma_{\phi 1} = -5.074\times 10^8\ \text{Pa}$$

$$K_o := \frac{\sigma_\phi}{\sigma_x}$$

$.8k = 52.4ksi$

If the calculated stress is greater than .8k then must find $E_t$, $E_s$, etc.

$$\sigma_i := \sqrt{\sigma_x^{\,2} + \sigma_\phi^{\,2} - \sigma_x \cdot \sigma_\phi}$$

$\sigma_i = 77.165ksi$

$$\sigma := -K_o \cdot \sigma_x$$

$$\varepsilon_1 := \frac{\sigma}{E}$$

$$\varepsilon_1 = 2.799 \times 10^{-3}$$

$$\sigma := k \cdot \left( .8 + .2 \cdot \tanh\left( 5 \cdot \frac{E}{k} \cdot \varepsilon_1 - 4 \right) \right)$$

$$\sigma = 65290.1psi$$

$$\varepsilon := \frac{k}{E} \cdot \left( 0.8 + 0.2 \cdot \operatorname{atanh}\left( 5 \cdot \frac{\sigma}{k} - 4 \right) \right)$$

$$\varepsilon = 2.799 \times 10^{-3}$$

$$E_s := \frac{k}{\varepsilon} \cdot \left[ 0.8 + 0.2 \cdot \left( \tanh\left( 5 \cdot \frac{E}{k} \cdot \varepsilon - 4 \right) \right)^2 \right]$$

$$E_s = 23254.1ksi$$

$$E_t := E \cdot \left( 1 - \tanh\left( 5 \cdot \frac{E}{k} \cdot \varepsilon - 4 \right) \right)$$

$$E_t = 480.6ksi$$

$$\nu_p := \left[ \frac{1}{2} - \left( \frac{1}{2} - \nu \right) \cdot \frac{E_s}{E} \right]$$

$$\nu_p = 0.345$$

$$E \leftarrow \sqrt{E_s \cdot E_t}$$

$$p_{aa} := \frac{2 \cdot s^2 \cdot E_s}{R^2 \cdot \sqrt{3 \cdot \left(1 - \nu_p^{\,2}\right)}}$$

$$K_1 := \left(1 - K_o + K_o^{\,2}\right)$$

$$H_4 := \frac{1 - \frac{E_t}{E_s}}{4 \cdot \left(1 - \nu_p^{\,2}\right) \cdot K_1}$$

$$H_3 := \left[\left(1 - 2 \cdot \nu_p\right) - \left(2 - \nu_p\right) \cdot K_o\right]$$

$$H_2 := \left[\left(2 - \nu_p\right) - \left(1 - 2 \cdot \nu_p\right) \cdot K_o\right]$$

$$H_1 := \left[1 + H_4 \cdot \left[H_2^{\,2} - 3 \cdot \left(1 - \nu_p^{\,2}\right)\right]\right]$$

$$C_3 := \left(1 + \frac{H_2 \cdot H_3 \cdot H_4}{\nu_p \cdot H_1}\right)$$

$$C_3 = -0.764$$

$$C_2 := \left(1 - \frac{H_3^{\,2} \cdot H_4}{H_1}\right)$$

$$C_2 = 0.167$$

$$C_1 := \left(1 - \frac{H_2^{\,2} \cdot H_4}{H_1}\right)$$

$$C_1 = 0.555$$

$$C_0 := \sqrt{\frac{C_1 \cdot C_2 - \nu_p^{\,2} \cdot C_3^{\,2}}{1 - \nu_p^{\,2}}}$$

$$C_0 = 0.163$$

$$\alpha_1 := \sqrt[4]{\frac{3\cdot\left[\frac{C_2}{C_1} - \left(\nu_p\cdot\frac{C_3}{C_1}\right)^2\right]}{s^2\cdot R^2}}$$

$$trial := \frac{\alpha_1\cdot L_1}{\pi}$$

$trial = 0.353$

Iterate on m until trial <= trial2

$m := 1$

$$trial2 := \sqrt{\frac{m}{2}\cdot(m+1)}$$

$trial2 = 1$

$$p_m := p_{aa}\cdot C_0\cdot\left[\left(\frac{\alpha_1\cdot L_1}{\pi\cdot m}\right)^2 + \frac{1}{4}\cdot\left(\frac{\pi\cdot m}{\alpha_1\cdot L_1}\right)^2\right]$$

$p_m = 1029.8psi$

$p \equiv 1030psi$ Iterate on pressure until $p_m$ is equal to p

**Summary**

Axisymmetric Buckling

$p_m = 1029.8psi$

Lobar Buckling

$p_{cr} = 2814.7psi$

General Instability

$p_g = 6184.9psi$

## Society of Naval Architects and Marine Engineers

### Submersible Vehicle Systems Design

$ksi := 1000psi$

### Input Section

| | |
|---|---|
| $L_f := 1.366in$ | Length between frames |
| $L_b := 8.636in$ | Length between bulkheads |
| $R := 8.4179in$ | Radius of cylinder to centerline of shell |
| $t := 0.0858in$ | shell thickness |
| $R_0 := R + .5 \cdot t$ | radius to outside of shell |

$R_0 = 8.461in$

| | |
|---|---|
| $E := 30000ksi$ | modulus of elasticity |
| $\sigma_y := 65.5 \cdot ksi$ | minimum yield stress of material |
| $\mu := 0.3$ | Poisson's ratio |

### Ring Stiffeners

| | |
|---|---|
| $t_w := 0.044in$ | thickness of web of ring stiffener |
| $depth := 0.5319in$ | total height of ring stiffener |
| $bf := 0.399in$ | breadth of ring stiffener |
| $d := 0.078in$ | ring stiffener flange thickness |
| $b_2 := bf - t_w$ | breadth of ring stiffener minus the web thickness |

$c_1 := .5 \cdot \left( \frac{t_w \cdot depth^2 + b_2 \cdot d^2}{t_w \cdot depth + b_2 \cdot d} \right)$ first centroidal height of ring stiffener

$c_1 = 0.143in$

$c_2 := depth - c_1$ second centroidal height of ring stiffener

$c_2 = 0.389in$

$h := c_1 - d$ distance from centroid of ring stiffener to nearest edge of flange

$h = 0.065in$

$R_r := R + .5 \cdot t + c_2$ radius to centroid of ring stiffener

$R_r = 8.85in$

$A_r := (t_w \cdot depth + b_2 \cdot d)$ cross-sectional area of ring stiffener

$A_r = 0.051in^2$

$I_r := \left(\frac{1}{3}\right) \cdot \left(bf \cdot c_1^3 - b_2 \cdot h^3 + t_w \cdot c_2^3\right)$ moment of inertia of ring stiffener about its centroidal axis

$I_r = 1.219 \times 10^{-3} in^4$

**Combined Plate and Ring Stiffener**

$A_p := L_f \cdot t$ area of effective plate

$A_{sp} := A_p + A_r$ area of plate and ring stiffener

$H_c := depth + t$ height of combined plate and ring stiffener

$B_1 := L_f - t_w$ plate length minus the web thickness

$$c_{1c} := .5\left[\frac{t_w \cdot H_c^{\,2} + B_1 \cdot t^2 + b_2 \cdot d \cdot (2 \cdot H_c - d)}{t_w \cdot H_c + B_1 \cdot t + d \cdot b_2}\right]$$

neutral axis of combined plate and ring stiffener

from outer fiber of plate ($R_0$)

$c_{1c} = 0.174\text{in}$

$R_c := R - .5 \cdot t + c_{1c}$ radius to centroidal axis of combined ring stiffener and shell

$R_c = 8.549\text{in}$

$$I_e := \frac{1}{3} \cdot \left[L_f \cdot c_{1c}^{\,3} - B_1 \cdot (c_{1c} - t)^3 + bf \cdot (H_c - c_{1c})^3 - (bf - t_w) \cdot (H_c - c_{1c} - d)^3\right]$$

moment of inertia of combined plate and shell

$I_e = 0.008\text{in}^4$

**Axisymmetric yielding**

$$B := \frac{t_w \cdot t}{A_r + t_w \cdot t}$$

$B = 0.069$

$$\theta := 10 \cdot \left[12 \cdot \left(1 - \mu^2\right)\right]^{\frac{1}{4}} \cdot \left(\frac{L_f}{2 \cdot R}\right) \cdot \left(\frac{50 \cdot t}{R}\right)^{-\left(\frac{1}{2}\right)}$$

$\theta = 2.066$

$$N := \frac{\cosh(\theta) - \cos(\theta)}{\sinh(\theta) + \sin(\theta)}$$

$N = 0.942$

$$\beta := \frac{11 \cdot N}{\sqrt{50 \cdot \frac{t}{R}}} \cdot \left( \frac{t^2}{A_r + t_w \cdot t} \right)$$

$$\beta = 1.947$$

$$H := -\left( \frac{3 \cdot \sinh\left(\frac{\theta}{2}\right) \cdot \cos\left(\frac{\theta}{2}\right) + \cosh\left(\frac{\theta}{2}\right) \cdot \sin\left(\frac{\theta}{2}\right)}{\sinh(\theta) + \sin(\theta)} \right)$$

$$H = -0.681$$

$$p_y := \frac{\sigma_y \cdot \frac{t}{R}}{1 + H \cdot \left( \frac{0.85 - B}{1 + \beta} \right)}$$

$$p_y = 814.733 \text{psi}$$

## Lobar Buckling

$$p_b := \left[ \frac{2.42 \cdot E}{\left(1 - \mu^2\right)^{\frac{3}{4}}} \right] \cdot \left[ \frac{\left(\frac{t}{2 \cdot R}\right)^{\frac{5}{2}}}{\left[ \frac{L_f}{2 \cdot R} - 0.45 \cdot \left(\frac{t}{2 \cdot R}\right)^{\frac{1}{2}} \right]} \right]$$

$$p_b = 2.948 \times 10^3 \text{ psi}$$

## General Instability

$$m := \frac{\pi \cdot R}{L_b}$$

$$n := 1$$

$$p_{cr1}(n) := \frac{E \cdot t}{R} \cdot \frac{m^4}{\left(n^2 - 1 + \frac{m^2}{2}\right) \cdot \left(n^2 + m^2\right)^2} + \frac{\left(n^2 - 1\right) \cdot E \cdot I_e}{R^3 \cdot L_f}$$

Given

$n \geq 1$

$n_2 := \text{Minimize}(p_{cr1}, n)$

$n_2 = 3.957$ n must be an integer

$n_{2int} := \text{round}(n_2, 0)$

$n_{2int} = 4$

$$n_{2first} := \begin{cases} n_{2int} \cdot 100 & \text{if } n_{2int} = 1 \\ n_{2int} - 1 & \text{otherwise} \end{cases}$$

$$n_{2prime} := \begin{pmatrix} n_{2first} \\ n_{2int} \\ n_{2int} + 1 \\ n_{2int} + 2 \end{pmatrix}$$

$$p_{cr2} := \begin{pmatrix} p_{cr1}\left(n_{2prime_0}\right) \\ p_{cr1}\left(n_{2prime_1}\right) \\ p_{cr1}\left(n_{2prime_2}\right) \\ p_{cr1}\left(n_{2prime_3}\right) \end{pmatrix}$$

$p_{cr} := \min(p_{cr2})$

$p_{cr} = 6498.2\text{psi}$

## Summary

Axisymmetric Buckling

$p_y = 814.7psi$

Lobar Buckling

$p_b = 2947.7psi$

General Instability

$p_{cr} = 6498.2psi$

## MIT 13A Professional Summer Submarine Design Trends

### PROGRAM TO COMPUTE SUITABILITY OF SUBMARINE DESIGN PARAMETERS.

Ref: "Hull Material Trade Off Study", D Fox, Jan 94

Define input parameters:

$ksi \equiv 1000 psi$

**Global Variable Inputs:**

| | |
|---|---|
| $e \equiv 0.0 \cdot in$ | Eccentricity |

**Material:**

| | |
|---|---|
| $\sigma_y \equiv 65500 psi$ | Yield strength |
| $E \equiv 30000 ksi$ | Modulus of Elasticity |
| $\nu \equiv 0.3$ | Poisson's Ratio |

**Geometry:**

| | |
|---|---|
| $R \equiv 8.4179 in$ | shell radius |
| $D \equiv 2 \cdot R$ | shell diameter |
| $L_f \equiv 1.366 in$ | frame spacing |
| $L_s \equiv 8.636 in$ | bulkhead spacing |
| $t_p \equiv 0.0858 in$ | shell thickness |
| $t_f \equiv 0.078 in$ | flange tickness |
| $w_f \equiv 0.399 in$ | flange width |
| $t_w \equiv 0.044 in$ | web thickness |
| $h_w \equiv 0.4539 in$ | web height |

Compute areas:

$R_f := R + \frac{t_p}{2}$ Frame Radius

$R_f = 8.461\text{in}$

Frame flange, web area:

$A_f := t_f \cdot w_f$

$A_w := t_w \cdot h_w$

$A := A_f + A_w$ Frame Area = Flange + Web

$A = 0.051\text{in}^2$

**PART 1 SHELL YIELDING**

$B := \frac{t_w \cdot t_p}{A + t_w \cdot t_p}$ Area ratio

$B = 0.069$

$\theta := L_f \cdot \left[\frac{3 \cdot \left(1 - \nu^2\right)}{\left(R \cdot t_p\right)^2}\right]^{\frac{1}{4}}$ Slenderness parameter:

$\theta = 2.066$

$N := \frac{\cosh(\theta) - \cos(\theta)}{\sinh(\theta) + \sin(\theta)}$ Deflection coefficient:

$N = \blacksquare$

$\beta := \frac{2 \cdot N}{A + t_w \cdot t_p} \cdot \left[\frac{1}{3 \cdot \left(1 - \nu^2\right)}\right]^{0.25} \cdot \sqrt{R \cdot t_p^{\,3}}$ Frame flexibility parameter:

$\beta = 1.947$

$$\Gamma := \frac{\left(1 - \frac{\nu}{2}\right) - B}{1 + \beta}$$ Frame deflection parameter:

$\Gamma = 0.265$

$$H_M := -2 \cdot \frac{\sinh\left(\frac{\theta}{2}\right) \cdot \cos\left(\frac{\theta}{2}\right) + \cosh\left(\frac{\theta}{2}\right) \cdot \sin\left(\frac{\theta}{2}\right)}{\sinh(\theta) + \sin(\theta)}$$ Bending effect (mem):

$H_M = -0.835$

$$H_E := -2 \cdot \left(\frac{3}{1 - \nu^2}\right)^{0.5} \cdot \frac{\sinh\left(\frac{\theta}{2}\right) \cdot \cos\left(\frac{\theta}{2}\right) - \cosh\left(\frac{\theta}{2}\right) \cdot \sin\left(\frac{\theta}{2}\right)}{\sinh(\theta) + \sin(\theta)}$$ Bending effect (bend):

$H_E = 0.557$

$$K := \frac{\sinh(\theta) - \sin(\theta)}{\sinh(\theta) + \sin(\theta)}$$ Bending efffect near frame:

$$
\begin{aligned}
p_{crl} := \;& f_y \leftarrow \sigma_y \\
& P_0 \leftarrow 1\ \text{psi} \\
& P_1 \leftarrow 1000\ \text{psi} \\
& P_2 \leftarrow 2000\ \text{psi} \\
& \text{delta} \leftarrow 5\ \text{psi} \\
& \text{limit} \leftarrow 1\ \text{psi} \\
& \text{conv} \leftarrow 1\ \text{psi} \\
& j \leftarrow 0 \\
& \text{while}\ \ j \le 20 \\
& \quad \text{for}\ \ i \in 0..2 \\
& \quad\quad \sigma_{\phi\phi so} \leftarrow \frac{-P_i \cdot R}{t_p} \cdot \left[1 + \Gamma \cdot (H_M + \nu \cdot H_E)\right] \\
& \quad\quad \sigma_{\phi\phi si} \leftarrow \frac{-P_i \cdot R}{t_p} \cdot \left[1 + \Gamma \cdot (H_M - \nu \cdot H_E)\right] \\
& \quad\quad \sigma_{xxso} \leftarrow \frac{-P_i \cdot R}{t_p} \cdot (0.5 + \Gamma \cdot H_E) \\
& \quad\quad \sigma_{xxsi} \leftarrow \frac{-P_i \cdot R}{t_p} \cdot (0.5 - \Gamma \cdot H_E) \\
& \quad\quad \sigma_{\phi\phi fo} \leftarrow \frac{-P_i \cdot R}{t_p} \cdot \left[1 - \Gamma \cdot \left[1 + \nu \cdot \left(\frac{3}{1-\nu^2}\right)^{0.5} \cdot K\right]\right] \\
& \quad\quad \sigma_{\phi\phi fi} \leftarrow \frac{-P_i \cdot R}{t_p} \cdot \left[1 - \Gamma \cdot \left[1 - \nu \cdot \left(\frac{3}{1-\nu^2}\right)^{0.5} \cdot K\right]\right] \\
& \quad\quad \sigma_{xxfo} \leftarrow \frac{-P_i \cdot R}{t_p} \cdot \left[0.5 - \Gamma \cdot \left(\frac{3}{1-\nu^2}\right)^{0.5} \cdot K\right] \\
& \quad\quad \sigma_{xxfi} \leftarrow \frac{-P_i \cdot R}{t_p} \cdot \left[0.5 + \Gamma \cdot \left(\frac{3}{1-\nu^2}\right)^{0.5} \cdot K\right] \\
& \quad\quad \sigma_{sy} \leftarrow \begin{pmatrix} \sigma_{\phi\phi so} \\ \sigma_{\phi\phi si} \\ \sigma_{xxso} \\ \sigma_{xxsi} \\ \sigma_{\phi\phi fo} \\ \sigma_{\phi\phi fi} \\ \sigma_{xxfo} \\ \sigma_{xxfi} \end{pmatrix} \\
& \quad\quad \sigma_1 \leftarrow \sigma_{sy_0} \\
& \quad\quad \sigma_2 \leftarrow \sigma_{sy_2} \\
& \quad\quad \sigma_3 \leftarrow \sigma_{sy_5} \\
& \quad\quad \sigma_4 \leftarrow \sigma_{sy_7}
\end{aligned}
$$

$$\sigma_{SYM} \leftarrow \left(\sigma_1^{\,2} - \sigma_1 \cdot \sigma_2 + \sigma_2^{\,2}\right)^{\frac{1}{2}}$$

$$\sigma_{SYF} \leftarrow \left(\sigma_3^{\,2} - \sigma_3 \cdot \sigma_4 + \sigma_4^{\,2}\right)^{\frac{1}{2}}$$

$$\sigma_{SY} \leftarrow \max\left(\begin{pmatrix} \sigma_{SYM} \\ \sigma_{SYF} \end{pmatrix}\right)$$

$$stress_i \leftarrow \sigma_{SY}$$

$$test_i \leftarrow |f_y - \sigma_{SY}|$$

$$shel \leftarrow \frac{test_0}{conv}$$

$$dav \leftarrow \frac{test_1}{conv}$$

$$\text{break if } \left|stress_1 - f_y\right| \le limit$$

$$P_0 \leftarrow P_1 \text{ if } shel \cdot dav > 0$$

$$P_2 \leftarrow P_1 \text{ if } shel \cdot dav < 0$$

$$P_1 \leftarrow P_0 + \frac{|P_2 - P_0|}{2}$$

$$j \leftarrow j + 1$$

$$out_0 \leftarrow \frac{P_1}{conv}$$

$$out_1 \leftarrow j - 1$$

out

$$pcr1 = \begin{pmatrix} 819.181 \\ 14 \end{pmatrix}$$

$$pcrit := pcr1_0 \cdot 1psi$$

$$pcrit = 819.2psi$$

## PART 2 LOBAR BUCKLING

Windenberg Approx of Von Mises (1933)

Assumes n lobes = Pi*D/L

Collapse

pressure:

$$P_{cLB} := \frac{2.42 \cdot E \cdot \left(\frac{t_p}{D}\right)^{2.5}}{\left(\frac{L_f}{D} - 0.45 \cdot \sqrt{\frac{t_p}{D}}\right) \cdot \left(1 - \nu^2\right)^{0.75}}$$

$P_{cLB} = 2947.7\text{psi}$

## PART 3 GENERAL INSTABILITY

Corrected Bryant Formula (1954) for better model test correlation

Pressure loading is:

$P := \rho \cdot g \cdot D_t \cdot SF_{gi}$

$P = 1786.13\,\text{lpsi}$

Compute *effective* frame spacing:

$$\gamma := \frac{P}{2 \cdot E} \cdot \left(\frac{R}{t_p}\right)^2 \cdot \sqrt{3 \cdot \left(1 - \nu^2\right)}$$

$\gamma = 0.473$

Compute clear length:

$L_c := L_f - t_w$

$n_1 := 0.5 \cdot \sqrt{1 - \gamma}$

$n_1 = 0.363$

$n_2 := 0.5 \cdot \sqrt{1 + \gamma}$

$n_2 = 0.607$

$$F_1 := \frac{4}{\theta} \cdot \left| \frac{\cosh(n_1 \cdot \theta)^2 - \cos(n_2 \cdot \theta)^2}{\frac{\cosh(n_1 \cdot \theta) \cdot \sinh(n_1 \cdot \theta)}{n_1} + \frac{\cos(n_2 \cdot \theta) \cdot \sin(n_2 \cdot \theta)}{n_2}} \right|$$

$F_1 = 0.894$ must be less than 1.00

$F_1$ is almost a linear decreasing function for pressures from 1 to 2000 psi with an average value of 0.90. This will be used in the following analysis as the pressure is the unknown and therefore the above equations cannot be directly used.

$F_1 := 0.90$

$L_{eff} := L_c \cdot F_1 + t_w$ Effective shell plate length:

$L_{eff} = 1.234in$

Theoretical critical lobe number values are: $i := 0..2$

$A_{eff} := L_{eff} \cdot t_p$ Effective plate area

$A_{eff} = 0.106in^2$:

Circumferential Lobes

$$n := \begin{pmatrix} 2 \\ 3 \\ 4 \end{pmatrix}$$

Longitudinal Lobes:

$$m := \pi \cdot \frac{R}{L_s}$$

$m = 3.062$

$$y_{na} := \frac{\left(\frac{h_w + t_f}{2}\right)\cdot A_f - \left(\frac{h_w + t_p}{2}\right)\cdot A_{eff}}{A_{eff} + A_w + A_f}$$ Frame-plate neutral axis (ref web centre+ toward flange):

$$y_{na} = -0.129\text{in}$$

Uses Parallel Axis Theorm: Icor = I + Ad2

Moments of inertia for plate,flange,web:

$$I_p := \frac{L_{eff}\cdot t_p^{\,3}}{12}$$

$$I_w := \frac{t_w\cdot h_w^{\,3}}{12}$$

$$I_f := \frac{w_f\cdot t_f^{\,3}}{12}$$

$$I_{pcor} := I_p + A_{eff}\cdot\left[\left(\frac{t_p + h_w}{2}\right) + y_{na}\right]^2$$

$$I_{wcor} := I_w + A_w\cdot(y_{na})^2$$

$$I_{fcor} := I_f + A_f\cdot\left(\frac{t_f + h_w}{2} - y_{na}\right)^2$$

$I_{eff} := I_{pcor} + I_{wcor} + I_{fcor}$ Moment of Inertia corrected for neutral axis.

$$I_{eff} = 7.711\times 10^{-3}\,\text{in}^4$$

Determine $R_f$ as radius to centroid of combined plate and stiffener:

The critical Elastic General Instability pressure is:

$$P_{cGI_i} := \frac{E\cdot t_p}{R}\cdot\frac{m^4}{\left[(n_i)^2 - 1 + \frac{m^2}{2}\right]\cdot\left[(n_i)^2 + m^2\right]^2} + \frac{\left[(n_i)^2 - 1\right]\cdot E\cdot I_{eff}}{R^3\cdot L_f}$$

Min Pressure:

$$P_{cGI} = \begin{pmatrix} 2.039\times 10^{4} \\ 8.546\times 10^{3} \\ 6.379\times 10^{3} \end{pmatrix} psi$$

$$n := \begin{pmatrix} 2 \\ 3 \\ 4 \end{pmatrix}$$

$$P_{cGI} := \min(P_{cGI})$$

$$P_{cGI} = 6378.9psi$$

**Summary**

Axisymmetric Buckling

$p_{crit} = 819.2psi$

Lobar Buckling

$P_{cLB} = 2947.7psi$

General Instability

$P_{cGI} = 6378.9psi$

## Analytic Solution

Defintions

$ksi := 6.894757 \cdot 10^{6} Pa$

| | |
|---|---|
| $E := 30000 ksi$ | Modulus of Elasticity |
| $R := 8.417 in$ | Radius of cylinder to centerline of shell |
| $D := 2 \cdot R$ | Diameter of cylinder |
| $\sigma_y := 65.5 ksi$ | Yield strength |
| $L := 1.366 in$ | Length of supported cylinder |
| $L_b := 8.636 in$ | Distance between bulkheads |
| $\mu := .3$ | Poison's ratio for Fe/Steel |
| $t := 0.0858 in$ | Shell thickness |

**Ring Stiffeners**

| | |
|---|---|
| $t_w := 0.044 in$ | thickness of web of ring stiffener |
| $H := 0.5319 in$ | height of ring stiffener |
| $b := t_w$ | faying width of stiffener (from P&S for I beam stiffener) |
| $bf := 0.399 in$ | breadth of ring stiffener |
| $b_2 := bf - t_w$ | breadth of ring stiffener minus the web thickness |
| $d := 0.078 in$ | ring stiffener flange thickness |
| $L_{bnash} := L - bf$ | distance from flange edges |

$c_1 := .5 \cdot \left( \frac{t_w \cdot H^2 + b_2 \cdot d^2}{t_w \cdot H + b_2 \cdot d} \right)$ first centroidal height of ring stiffener

$c_1 = 0.143in$

$c_2 := H - c_1$ second centroidal height of ring stiffener

$c_2 = 0.389in$

$h := c_1 - d$ distance from centroid of ring stiffener to nearest edge of flange

$h = 0.065in$

$R_r := R + .5 \cdot t + c_2$ radius to centroid of ring stiffener

$R_r = 8.85in$

$A_r := (t_w \cdot H + b_2 \cdot d)$ cross-sectional area of ring stiffener

$A_r = 0.051in^2$

$I_r := \left(\frac{1}{3}\right) \cdot \left(bf \cdot c_1^{\,3} - b_2 \cdot h^3 + t_w \cdot c_2^{\,3}\right)$ moment of inertia of ring stiffener about its centroidal axis

$I_r = 1.219 \times 10^{-3} in^4$

$A_{eff} := A_r \cdot \left(\frac{R}{R_r}\right)$ effective area of stiffener eqn [24a] from P&S

$A_{eff} = 0.049in^2$

$\alpha := \frac{A_{eff}}{L \cdot t}$ ratio of effective frame area to shell area eqn [62] P&S

$\alpha = 0.415$

$\beta := \frac{b}{L}$ ratio of faying width to frame spacing eqn [62] P&S

$\beta = 0.032$

**Combined Plate and Ring Stiffener**

$A_p := L \cdot t$ area of effective plate

$A_{sp} := A_p + A_r$ area of plate and ring stiffener

$H_c := H + t$ height of combined plate and ring stiffener

$H_c = 0.051\text{ft}$

$B_1 := L - t_w$ plate length minus the web thickness

$$c_{1c} := .5\left[\frac{t_w \cdot H_c^2 + B_1 \cdot t^2 + b_2 \cdot d \cdot (2 \cdot H_c - d)}{t_w \cdot H_c + B_1 \cdot t + d \cdot b_2}\right]$$

neutral axis of combined plate and ring stiffener from outer fiber of plate ($R_0$)

$c_{1c} = 0.174\text{in}$

$R_c := R - .5 \cdot t + c_{1c}$ radius to centroidal axis of combined ring stiffener and shell

$R_c = 8.549\text{in}$

$$I_e := \frac{1}{3} \cdot \left[L \cdot c_{1c}^3 - B_1 \cdot (c_{1c} - t)^3 + bf \cdot (H_c - c_{1c})^3 - (bf - t_w) \cdot (H_c - c_{1c} - d)^3\right]$$

moment of inertia of combined plate and shell

$I_e = 0.01\text{in}^4$

**a. Buckling of unreinforced shells**

$n := 1$ guess at number of waves around the circumference

$$p_{ur1}(n) := \left(\frac{E \cdot t}{R}\right) \cdot \left[\frac{1}{n^2 + .5 \cdot \left(\frac{\pi \cdot R}{L}\right)^2}\right] \cdot \left[\left[\frac{\left(\frac{\pi \cdot R}{L}\right)^4}{\left[n^2 + \left(\frac{\pi \cdot R}{L}\right)^2\right]^2}\right] + \left[\frac{\left(\frac{t}{R}\right)^2}{12 \cdot (1 - \mu^2)}\right] \cdot \left[n^2 + \left(\frac{\pi \cdot R}{L}\right)^2\right]^2\right]$$

Given

$n \geq 1$

$n_1 := \text{Minimize}(p_{ur1}, n)$

$n_1 = 13.812$ n must be an integer

$n_{1int} := \text{round}(n_1, 0)$

$n_{1int} = 14$

$$n_{1prime} := \begin{pmatrix} n_{1int} - 1 \\ n_{1int} \\ n_{1int} + 1 \\ n_{1int} + 2 \end{pmatrix}$$

$$p_{ur1} := \begin{pmatrix} p_{ur1}(n_{1prime_0}) \\ p_{ur1}(n_{1prime_1}) \\ p_{ur1}(n_{1prime_2}) \\ p_{ur1}(n_{1prime_3}) \end{pmatrix}$$

$p_{ur} := \min(p_{ur1})$

$p_{ur} = 2.816 \times 10^3$ psi

## b. Axisymmetric Buckling

$$
p_{cab} := \left|
\begin{array}{l}
\gamma \leftarrow 0 \\
limit \leftarrow 10psi \\
test \leftarrow 0psi \\
conv \leftarrow 1psi \\
j \leftarrow 0 \\
\text{while } j \le 20 \\
\quad \left|
\begin{array}{l}
\eta_1 \leftarrow \frac{1}{2}\cdot\sqrt{1-\gamma} \\
\eta_2 \leftarrow \frac{1}{2}\cdot\sqrt{1+\gamma} \\
\theta \leftarrow \sqrt[4]{3\cdot\left(1-\mu^2\right)}\cdot\frac{L}{\sqrt{R\cdot t}} \\
F_1 \leftarrow \frac{4}{\theta}\cdot\frac{\cosh\left(\eta_1\cdot\theta\right)^2-\cos\left(\eta_2\cdot\theta\right)^2}{\frac{\cosh\left(\eta_1\cdot\theta\right)\cdot\sinh\left(\eta_1\cdot\theta\right)}{\eta_1}+\frac{\cos\left(\eta_2\cdot\theta\right)\cdot\sin\left(\eta_2\cdot\theta\right)}{\eta_2}} \\
F_2 \leftarrow \frac{\frac{\cosh\left(\eta_1\cdot\theta\right)\cdot\sin\left(\eta_2\cdot\theta\right)}{\eta_2}+\frac{\sinh\left(\eta_1\cdot\theta\right)\cdot\cos\left(\eta_2\cdot\theta\right)}{\eta_1}}{\frac{\cosh\left(\eta_1\cdot\theta\right)\cdot\sinh\left(\eta_1\cdot\theta\right)}{\eta_1}+\frac{\cos\left(\eta_2\cdot\theta\right)\cdot\sin\left(\eta_2\cdot\theta\right)}{\eta_2}} \\
F_3 \leftarrow \sqrt{\frac{3}{1-\mu^2}}\cdot\frac{\frac{\cos\left(\eta_2\cdot\theta\right)\cdot\sin\left(\eta_2\cdot\theta\right)}{\eta_2}-\frac{\cosh\left(\eta_1\cdot\theta\right)\cdot\sinh\left(\eta_1\cdot\theta\right)}{\eta_1}}{\frac{\cosh\left(\eta_1\cdot\theta\right)\cdot\sinh\left(\eta_1\cdot\theta\right)}{\eta_1}+\frac{\cos\left(\eta_2\cdot\theta\right)\cdot\sin\left(\eta_2\cdot\theta\right)}{\eta_2}} \\
F_4 \leftarrow \sqrt{\frac{3}{1-\mu^2}}\cdot\frac{\frac{\cosh\left(\eta_1\cdot\theta\right)\cdot\sin\left(\eta_2\cdot\theta\right)}{\eta_2}-\frac{\sinh\left(\eta_1\cdot\theta\right)\cdot\cos\left(\eta_2\cdot\theta\right)}{\eta_1}}{\frac{\cosh\left(\eta_1\cdot\theta\right)\cdot\sinh\left(\eta_1\cdot\theta\right)}{\eta_1}+\frac{\cos\left(\eta_2\cdot\theta\right)\cdot\sin\left(\eta_2\cdot\theta\right)}{\eta_2}} \\
A \leftarrow \frac{\left(1-\frac{\mu}{2}\right)\cdot\alpha}{\alpha+\beta+\left(1-\beta\right)\cdot F_1} \\
denom1 \leftarrow A^2\cdot\left[F_2^{\,2}+F_2\cdot F_4\cdot\left(1-2\cdot\mu\right)\cdot\left(\sqrt{\frac{0.91}{1-\mu^2}}\right)+F_4^{\,2}\cdot\left(1-\mu+\mu^2\right)\cdot\left(\frac{0.91}{1-\mu^2}\right)\right] \\
denom2 \leftarrow \left(\frac{3}{2}\right)\cdot A\cdot\left(F_2-\mu\cdot F_4\cdot\sqrt{\frac{0.91}{1-\mu^2}}\right) \\
p_{c2} \leftarrow \frac{\sigma_y\cdot\left(\frac{t}{R}\right)}{\sqrt{\frac{3}{4}+denom1-denom2}} \\
\text{break if } \left|p_{c2}-test\right| \le limit \\
\gamma \leftarrow \frac{p_{c2}}{2\cdot E}\cdot\left[\sqrt{3\cdot\left(1-\mu^2\right)}\right]\cdot\left(\frac{R}{t}\right)^2 \\
test \leftarrow p_{c2} \\
j \leftarrow j+1 \\
out_0 \leftarrow \frac{p_{c2}}{conv} \\
out_1 \leftarrow j
\end{array}
\right. \\
out
\end{array}
\right.
$$

$$p_{cab} = \begin{pmatrix} 875.9 \\ 2 \end{pmatrix}$$

$$p_{axiy} := p_{cab_0} \cdot 1psi$$

$$p_{axiy} = 875.9psi$$

**c. Asymmetric Collapse (Lobar buckling)**

Windenberg Approx of Von Mises (1933)

Assumes n lobes = Pi*D/L

Collapse pressure:

$$p_{cLB} := \frac{2.42 \cdot E \cdot \left(\frac{t}{D}\right)^{2.5}}{\left(\frac{L}{D} - 0.45 \cdot \sqrt{\frac{t}{D}}\right) \cdot \left(1 - \mu^2\right)^{0.75}}$$

$$p_{cLB} = 2.948 \times 10^3 \, psi$$

**d. General Instability of shells and rings**

$$\lambda := \frac{\pi \cdot R}{L_b}$$

$$n := 1$$

$$p_{cGI}(n) := \frac{E \cdot t}{R} \cdot \frac{\lambda^4}{\left(n^2 - 1 + \frac{\lambda^2}{2}\right) \cdot \left(n^2 + \lambda^2\right)^2} + \frac{\left(n^2 - 1\right) \cdot E \cdot I_e}{R^3 \cdot L}$$

Given

$$n \geq 1$$

$n_2 := \text{Minimize}(p_{cGI}, n)$

$n_2 = 3.957$ n must be an integer

$n_{2int} := \text{round}(n_2, 0)$

$n_{2int} = 4$

$$n_{2prime} := \begin{pmatrix} n_{2int} - 1 \\ n_{2int} \\ n_{2int} + 1 \\ n_{2int} + 2 \end{pmatrix}$$

$$p_{cgi2} := \begin{pmatrix} p_{cGI}(n_{2prime_0}) \\ p_{cGI}(n_{2prime_1}) \\ p_{cGI}(n_{2prime_2}) \\ p_{cGI}(n_{2prime_3}) \end{pmatrix}$$

$p_{cgibryant} := \min(p_{cgi2})$

$p_{cgibryant} = 6.498 \times 10^3$ psi

**Summary**

Lobar Buckling

$p_{cLB} = 2947.7$psi

Axisymmetric Buckling

$p_{axiy} = 875.9$psi

General Instability

$p_{cgibryant} = 6498.2$psi

$n_{2int} = 4$

# Appendix D: Codes for Test Cylinder 2.c

## AMERICAN BUREAU OF SHIPPING

### Rules for Building and Classing Underwater Vehicles, Systems, and Hyperbaric Facilities

Definitions

$ksi := 1000psi$

$E := 30000ksi$ Modulus of Elasticity

$\nu := 0.3$ Poisson's Ratio

$\sigma_y := 157000psi$ Yield strength

Shell Parameters

$L_s := 3.256in$ Distance between stiffeners

$L_c := 115.532in$ Distance between bulkheads

$R := 18.882in$ Mean radius of shell

$t := 0.337in$ Thickness of shell

$R_o := R + \frac{t}{2}$ Outer radius of shell

$R_o = 19.051in$

$D_o := 2 \cdot R_o$ Outer Diameter of shell

**Ring Stiffeners**

$t_w := 0.127in$ thickness of web of ring stiffener

$depth := 2.315in$ height of ring stiffener

$b := t_w$ faying width of stiffener (from P&S for I beam stiffener)

$bf := 1.552in$ breadth of ring stiffener

$b_2 := bf - t_w$ breadth of ring stiffener minus the web thickness

$d := 0.305in$ ring stiffener flange thickness

$L_b := L_s - t_w$ Unsupported spacing between stiffeners

$L_b = 3.129in$

$L := \max(L_s, L_b)$

$L = 3.256in$

$c_1 := .5 \cdot \left( \frac{t_w \cdot depth^2 + b_2 \cdot d^2}{t_w \cdot depth + b_2 \cdot d} \right)$ first centroidal height of ring stiffener

$c_1 = 0.558in$

$c_2 := depth - c_1$ second centroidal height of ring stiffener

$c_2 = 1.757in$

$h := c_1 - d$ distance from centroid of ring stiffener to nearest edge of flange

$R_s := R - .5 \cdot t - c_2$ radius to centroid of ring stiffener

$R_s = 16.957in$

$A_s := (t_w \cdot depth + b_2 \cdot d)$ cross-sectional area of ring stiffener

$A_s = 0.729in^2$

$I_r := \left(\frac{1}{3}\right) \cdot \left(bf \cdot c_1^3 - b_2 \cdot h^3 + t_w \cdot c_2^3\right)$ moment of inertia of ring stiffener about its centroidal axis

$I_r = 0.312in^4$

$R_f := R - .5 \cdot t - depth$ Radius to tip of the stiffener

$R_f = 16.398in$

**Combined Plate and Ring Stiffener**

$$L_e := \min\begin{pmatrix} 1.5\cdot\sqrt{R\cdot t} \\ 0.75\cdot L_s \end{pmatrix}$$ effective plate length

$L_e = 2.442\text{in}$

$A_p := L\cdot t$ area of effective plate

$A_{sp} := A_p + A_s$ area of plate and ring stiffener

$H_c := \text{depth} + t$ height of combined plate and ring stiffener

$H_c = 0.221\text{ft}$

$B_1 := L - t_w$ plate length minus the web thickness

$$c_{1c} := .5\left[\frac{t_w\cdot H_c^{\,2} + B_1\cdot t^2 + b_2\cdot d\cdot(2\cdot H_c - d)}{t_w\cdot H_c + B_1\cdot t + d\cdot b_2}\right]$$ neutral axis of combined plate and ring stiffener from outer fiber of plate ($R_0$)

$c_{1c} = 0.937\text{in}$

$R_c := R + .5\cdot t - c_{1c}$ radius to centroidal axis of combined ring stiffener and shell

$R_c = 18.114\text{in}$

$$I_e := \frac{1}{3}\cdot\left[L\cdot c_{1c}^{\,3} - B_1\cdot(c_{1c} - t)^3 + bf\cdot(H_c - c_{1c})^3 - (bf - t_w)\cdot(H_c - c_{1c} - d)^3\right]$$

moment of inertia of combined plate and shell

$I_e = 1.946\text{in}^4$

**General Equations**

$$M := \frac{L}{\sqrt{R\cdot t}}$$

$M = 1.291$

$$\theta := \left[3\cdot\left(1 - \nu^2\right)\right]^{\frac{1}{4}}\cdot M$$

$$\theta = 1.659$$

$$Q := \frac{\theta}{2}$$

$$Q = 0.83$$

$$N := \frac{\cosh(2\cdot Q) - \cos(2\cdot Q)}{\sinh(2\cdot Q) + \sin(2\cdot Q)}$$

$$N = 0.797$$

$$G := 2\cdot\frac{(\sinh(Q)\cdot\cos(Q) + \cosh(Q)\cdot\sin(Q))}{\sinh(2\cdot Q) + \sin(2\cdot Q)}$$

$$G = 0.926$$

$$H := \frac{\sinh(2Q) - \sin(2\cdot Q)}{\sinh(2\cdot Q) + \sin(2Q)}$$

$$H = 0.435$$

**Inter-Stiffener Strength (6.19.1)**

1) Inter-stiffener strength equations

yield pressure at midbay and midplane of cylinder

This equates to axisymmetric buckling

$A := A_s\cdot\left(\frac{R}{R_s}\right)$ Effective area of plate and stiffener (Internal stiffeners)

$$A = 0.811\,in^2$$

$$F := \frac{A \cdot \left(1 - \frac{\nu}{2}\right) \cdot G}{A + t_w \cdot t + \frac{2N \cdot t \cdot L}{\theta}}$$

$F = 0.335$

$$P_y := \frac{\sigma_y \cdot \frac{t}{R}}{1 - F}$$

$P_y = 4211.1\text{psi}$

von Mises buckling pressure for a cylinder

This corresponds to Lobar buckling

$$P_m := \frac{2.42 \cdot E \cdot \left(\frac{t}{2 \cdot R}\right)^{\frac{5}{2}}}{\left(1 - \nu^2\right)^{\frac{3}{4}} \cdot \left[\frac{L}{2 \cdot R} - 0.45 \cdot \left(\frac{t}{2 \cdot R}\right)^{\frac{1}{2}}\right]}$$

$P_m = 13410.8\text{psi}$

$$P_c := \begin{cases} \frac{P_m}{2} & \text{if } \frac{P_m}{P_y} \le 1 \\ P_y \cdot \left(1 - \frac{P_y}{2 \cdot P_m}\right) & \text{if } 1 < \frac{P_m}{P_y} \le 3 \\ \frac{5}{6} \cdot P_y & \text{if } \frac{P_m}{P_y} > 3 \end{cases}$$

$P_c = 3509.3\text{psi}$

maximum allowable working pressure for inter-stiffener strength

$P_{aits} := P_c \cdot .8$

$P_{aits} = 2807.4psi$

2) longitudinal stress

limiting pressure corresponding to the longitudinal stress at stiffeners reaching yield

No direct correlation to major failure modes

$$\gamma := \frac{A \cdot \left(1 - \frac{\nu}{2}\right)}{A + t_w \cdot t + \frac{2 \cdot N \cdot t \cdot L}{\theta}}$$

$$P_l := \frac{2 \cdot \sigma_y \cdot t}{R} \cdot \left[1 + \left(\frac{12}{1 - \nu^2}\right)^{\frac{1}{2}} \cdot \gamma \cdot H\right]^{-1}$$

$P_l = 3566.1psi$

maximum allowable working pressure for longitudinal stress

$P_{als} := P_l \cdot .67$

$P_{als} = 2389.29psi$

**b Overall Buckling Strength (6.19.5)**

$$\lambda := \frac{\pi \cdot R}{L_c}$$

$n := 1$

$A_2(n) := n^2 - 1$

$$A_1(n) := \frac{\lambda^4}{\left(A_2(n) + \frac{\lambda^2}{2}\right)\cdot\left(n^2 + \lambda^2\right)^2}$$

$$p_{n1}(n) := \frac{E\cdot t}{R}\cdot A_1(n) + \frac{E\cdot I_e\cdot A_2(n)}{R^3\cdot L}$$

Given

$n \geq 2$

$n_2 := \text{Minimize}(p_{n1}, n)$

$n_2 = 2$ n must be an integer

$n_{2int} := \text{round}(n_2, 0)$

$n_{2int} = 2$

$$n_{2first} := \begin{cases} n_{2int}\cdot 100 & \text{if } n_{2int} = 1 \\ n_{2int} - 1 & \text{otherwise} \end{cases} \qquad n_{2first} = 1$$

$$n_{2prime} := \begin{pmatrix} n_{2first} \\ n_{2int} \\ n_{2int} + 1 \\ n_{2int} + 2 \end{pmatrix}$$

$$p_{n2} := \begin{pmatrix} p_{n1}(n_{2prime_0}) \\ p_{n1}(n_{2prime_1}) \\ p_{n1}(n_{2prime_2}) \\ p_{n1}(n_{2prime_3}) \end{pmatrix} \qquad p_{n2} = \begin{pmatrix} 1.768\times 10^5 \\ 8.642\times 10^3 \\ 2.136\times 10^4 \\ 3.995\times 10^4 \end{pmatrix} \text{psi}$$

$p_n := \min(p_{n2})$

$p_n = 8642.1\text{psi}$

**Summary**

Axisymmetric Buckling

$P_y = 4211.1psi$

Lobar Buckling

$P_m = 13410.8psi$

General Instability

$p_n = 8642.1psi$

$n_{2int} = 2$

## Germanischer Lloyd

1988 Edition

Chapter 2 - Submersibles

$MPa := 10^6 Pa$

$ksi := 10^3 psi$

### General Definitions

| | |
|---|---|
| $E := 30000 ksi$ | Modulus of Elasticity |
| $L_1 := 3.256 in$ | stiffener spacing |
| $L_3 := 115.532 in$ | length of cylinder between bulkheads or lines of support |
| $s := 0.337 in$ | thickness of shell |
| $R := 18.882 in$ | radius to centerline of shell |
| $\nu := 0.3$ | Poisson's Ratio |
| $k := 157 \cdot ksi$ | minimum yield stress of material |

### Stiffener Dimensions

| | |
|---|---|
| $e_f := 0.305 in$ | flange thickness |
| $d_f := 0.7125 in$ | width of flange from web to edge of flange |
| $b_2 := 2 \cdot d_f$ | |
| $d_w := 2.01 in$ | Height of web |
| $e_w := 0.127 in$ | web thickness |
| $b := e_w$ | width of stiffener ring in contact with shell |

$A_1 := e_f \cdot (e_w + 2 \cdot d_f) + e_w \cdot d_w$ cross-sectional area of stiffener ring

$A_1 = 0.729 in^2$

$H_{stiff} := d_w + e_f$

$H_{stiff} = 2.315 in$

$$c_1 := \frac{1}{2} \cdot \frac{e_w \cdot H_{stiff}^2 + b_2 \cdot e_f^2}{e_w \cdot H_{stiff} + b_2 \cdot e_f}$$

$c_1 = 0.558 in$

$c_2 := H_{stiff} - c_1$

$c_2 = 1.757 in$

$h_2 := c_1 - e_f$

$h_2 = 0.253 in$

$I_1 := \left(\frac{1}{3}\right) \cdot \left[(e_w + 2 \cdot d_f) \cdot c_1^3 - (2 \cdot d_f) \cdot h_2^3 + e_w \cdot c_2^3\right]$ Centroidal Moment of inertia of ring stiffener

$I_1 = 0.312 in^4$

$e := c_2 + .5 \cdot s$ distance from stiffener centroid to center of shell

$e = 1.925 in$

**Effective Stiffener and Shell**

$L_{etest} := b + \sqrt{2 \cdot R \cdot s}$

$L_{etest} = 93.838 mm$

$$L_e := \begin{cases} L_{etest} & \text{if } L_{etest} \le L_1 \\ L_1 & \text{otherwise} \end{cases}$$ Effective length of shell

$L_e = 3.256 in$

$$I_e := \frac{A_1 \cdot e^2}{1 + \frac{A_1}{L_e \cdot s}} + I_1 + \frac{L_e \cdot s^3}{12}$$ Moment of Inertia of combined plate and shell

$$I_e = 1.946 in^4$$

$$H_{stiffc} := H_{stiff} + s$$ Total height of stiffener and plate

$$H_{stiffc} = 2.652 in$$

$$d_1 := s$$

$$bs_1 := L_e - e_w$$

$$c_{1c} := \frac{1}{2} \cdot \frac{e_w \cdot H_{stiffc}^2 + b_2 \cdot e_f^2 + bs_1 \cdot s \cdot (2 \cdot H_{stiffc} - s)}{e_w \cdot H_{stiffc} + b_2 \cdot e_f + bs_1 \cdot s}$$

$$c_{1c} = 1.715 in$$

$$c_{2c} := H_{stiffc} - c_{1c}$$

$$c_{2c} = 0.937 in$$

$$R_o := R + .5 \cdot s - c_{2c}$$ radius of stiffener ring centroid including effect of $L_e$

$$R_o = 18.114 in$$

$$A := A_1 \cdot \frac{R^2}{R_o^2}$$ Modified area of stiffener ring

$$A = 0.792 in^2$$

$$e_1 := c_{2c} + .5 \cdot s$$

$$e_1 = 1.105 in$$

## 2.4 Asymmetric Buckling (Lobar but not named this)

$$\lambda_1 := \frac{\pi \cdot R}{L_1}$$

$n := 2$ initial guess

$$\beta_{n1}(n) := \frac{\left[\left(\frac{n^2}{\lambda_1^2} + 1\right)^{-2} + \frac{s^2 \cdot \left(n^2 - 1 + \lambda_1^2\right)^2}{12 \cdot R^2 \cdot \left(1 - \nu^2\right)}\right]}{n^2 - 1 + .5 \cdot \lambda_1^2}$$

$$p_{n1}(n) := \frac{E \cdot s \cdot \beta_{n1}(n)}{R}$$

Given

$n \geq 2$

$n_g := \text{Minimize}(p_{n1}, n)$

$n_g = 10.171$ n must be an integer

$n_{gint} := \text{round}(n_g, 0)$

$n_{gint} = 10$

$$n_{gfirst} := \begin{cases} n_{gint} \cdot 100 & \text{if } n_{gint} = 1 \\ n_{gint} - 1 & \text{otherwise} \end{cases}$$

$$n_{gprime} := \begin{pmatrix} n_{gfirst} \\ n_{gint} \\ n_{gint} + 1 \\ n_{gint} + 2 \end{pmatrix} \qquad n_{gprime} = \begin{pmatrix} 9 \\ 10 \\ 11 \\ 12 \end{pmatrix}$$

$$p_{n2} := \begin{pmatrix} p_{n1}\left(n_{gprime_0}\right) \\ p_{n1}\left(n_{gprime_1}\right) \\ p_{n1}\left(n_{gprime_2}\right) \\ p_{n1}\left(n_{gprime_3}\right) \end{pmatrix}$$

$$p_{cr} := \min\left(p_{n2}\right)$$

$$p_{cr} = 12139.3\text{psi}$$

### 3.3.3 General Instability

$L := L_3$ Spacing between effective stiffeners

$$\lambda_2 := \frac{\pi \cdot R}{L}$$

$$\beta_{n2}(n) := \frac{\lambda_2^{\,4}}{\left(n^2 - 1 + 0.5 \cdot \lambda_2^{\,2}\right) \cdot \left(n^2 + \lambda_2^{\,2}\right)^2}$$

$$p_o(n) := \frac{E \cdot s \cdot \beta_{n2}(n)}{R}$$

$$p_1(n) := \frac{\left(n^2 - 1\right) \cdot E \cdot I_e}{R_o^{\,3} \cdot L_1}$$

$$p_{n1a}(n) := p_o(n) + p_1(n)$$

$n := 2$

Given

$n \geq 2$

$n_2 := \text{Minimize}\left(p_{n1a}, n\right)$

$n_2 = 2$ n must be an integer

$n_{2int} := \mathrm{round}(n_2, 0)$

$n_{2int} = 2$

$$n_{2prime} := \begin{pmatrix} n_{2int} - 1 \\ n_{2int} \\ n_{2int} + 1 \\ n_{2int} + 2 \end{pmatrix}$$

$$p_{g2} := \begin{pmatrix} p_{n1a}(n_{2prime_0}) \\ p_{n1a}(n_{2prime_1}) \\ p_{n1a}(n_{2prime_2}) \\ p_{n1a}(n_{2prime_3}) \end{pmatrix} \qquad p_{g2} = \begin{pmatrix} 1.768\times 10^5 \\ 9.702\times 10^3 \\ 2.418\times 10^4 \\ 4.525\times 10^4 \end{pmatrix} \mathrm{psi}$$

$p_g := \min(p_{g2})$

$p_g = 9702.4\mathrm{psi}$

## 2.6 Symmetric Buckling (axisymmetric)

More Definitions

For Elastic-Plastic Region (Eqns are in the program)

$E_s := E$ Secant Modulus = Young's Modulus for elastic region

$E_t := E$ Tangent Modulus = Young's Modulus for elastic region

$\nu_p := \nu$ Poisson's Ratio, elastic-plastic; = Poisson's ratio in elastic

$$\alpha := \sqrt[4]{\frac{3\cdot(1-\nu^2)}{s^2\cdot R^2}}$$ shape factor

$$\alpha = 0.02\frac{1}{\mathrm{mm}}$$

$C_5 := \alpha \cdot L_1$ calculation factor for symmetric buckling

$C_5 = 1.659$

$p_{ast} := \dfrac{2 \cdot s^2 \cdot E}{R^2 \cdot \sqrt{3 \cdot (1 - \nu^2)}}$ critical pressure, elastic, calculation factor

$p_{ast} = 11567.346 \text{psi}$

$G := \dfrac{p}{p_{ast}}$

$C_6 := \dfrac{1}{2} \cdot \sqrt{1 - G}$

$C_7 := \dfrac{1}{2} \cdot \sqrt{1 + G}$

$C_8 := C_5 \cdot C_6$

$C_9 := C_5 \cdot C_7$

$$F_1 := \frac{4}{C_5} \cdot \frac{\cosh(C_8)^2 - \cos(C_9)^2}{\dfrac{\cosh(C_8) \cdot \sinh(C_8)}{C_6} + \dfrac{\cos(C_9) \cdot \sin(C_9)}{C_7}}$$

$$F_2 := \frac{\dfrac{\cosh(C_8) \cdot \sin(C_9)}{C_7} + \dfrac{\sinh(C_8) \cdot \cos(C_9)}{C_6}}{\dfrac{\cosh(C_8) \cdot \sinh(C_8)}{C_6} + \dfrac{\cos(C_9) \cdot \sin(C_9)}{C_7}}$$

$$F_3 := \sqrt{\frac{3}{1 - \nu^2}} \cdot \frac{\dfrac{\cos(C_9) \cdot \sin(C_9)}{C_7} - \dfrac{\cosh(C_8) \cdot \sinh(C_8)}{C_6}}{\dfrac{\cosh(C_8) \cdot \sinh(C_8)}{C_6} + \dfrac{\cos(C_9) \cdot \sin(C_9)}{C_7}}$$

$$F_4 := \sqrt{\frac{3}{1-\nu^2}} \cdot \frac{\dfrac{\cosh(C_8)\cdot\sin(C_9)}{C_7} - \dfrac{\sinh(C_8)\cdot\cos(C_9)}{C_6}}{\dfrac{\cosh(C_8)\cdot\sinh(C_8)}{C_6} + \dfrac{\cos(C_9)\cdot\sin(C_9)}{C_7}}$$

$$C_{10} := \frac{\left(1-\frac{\nu}{2}\right)\cdot\frac{A}{s\cdot L_1}}{\frac{A}{s\cdot L_1} + \frac{b}{L_1} + \left(1-\frac{b}{L_1}\right)\cdot F_1}$$

$$C_{11} := \sqrt{\frac{0.91}{1-\nu^2}}$$

$$\sigma_o := \frac{-p\cdot R}{s}$$

$$\sigma_x := \sigma_o\cdot\left(\frac{1}{2} + C_{10}\cdot C_{11}\cdot F_4\right)$$

$$\sigma_\phi := \sigma_o\cdot\left(1 - C_{10}\cdot F_2 + \nu\cdot C_{10}\cdot C_{11}\cdot F_4\right)$$

$$\sigma_{x1} := \sigma_o\cdot\left(\frac{1}{2} - C_{10}\cdot C_{11}\cdot F_4\right)$$

$$\sigma_x = -1.168\times 10^9\,\text{Pa}$$

$$\sigma_{\phi 1} := \sigma_o\cdot\left(1 - C_{10}\cdot F_2 - \nu\cdot C_{10}\cdot C_{11}\cdot F_4\right)$$

$$\sigma_\phi = -1.259\times 10^9\,\text{Pa}$$

$$K_o := \frac{\sigma_\phi}{\sigma_x}$$

$$\sigma_i := \sqrt{\sigma_x^2 + \sigma_\phi^2 - \sigma_x\cdot\sigma_\phi}$$

$$\sigma_i = 176.383\,\text{ksi}$$

$$\sigma := -K_o\cdot\sigma_x$$

$$\sigma = 182.6\,\text{ksi}$$

$$\varepsilon_1 := \frac{\sigma}{E}$$

$$\varepsilon_1 = 6.087\times 10^{-3}$$

$$\sigma := k\cdot\left(.8 + .2\cdot\tanh\left(5\cdot\frac{E}{k}\cdot\varepsilon_1 - 4\right)\right)$$

$$\sigma = 155380.1\text{psi}$$

$$\varepsilon := \frac{k}{E}\cdot\left(0.8 + 0.2\cdot\operatorname{atanh}\left(5\cdot\frac{\sigma}{k} - 4\right)\right)$$

$$\varepsilon = 6.087\times 10^{-3}$$

$$E_s := \frac{k}{\varepsilon}\cdot\left[0.8 + 0.2\cdot\left(\tanh\left(5\cdot\frac{E}{k}\cdot\varepsilon - 4\right)\right)^2\right]$$

$$E_s = 1.743\times 10^{11}\,\text{Pa}$$

$$E_t := E\cdot\left(1 - \tanh\left(5\cdot\frac{E}{k}\cdot\varepsilon - 4\right)\right)$$

$$E_t = 1.067\times 10^{10}\,\text{Pa}$$

$$\nu_p := \left[\frac{1}{2} - \left(\frac{1}{2} - \nu\right)\cdot\frac{E_s}{E}\right]$$

$$\nu_p = 0.332$$

$$E \leftarrow \sqrt{E_s\cdot E_t}$$

$$p_{aa} := \frac{2\cdot s^2\cdot E_s}{R^2\cdot\sqrt{3\cdot\left(1 - \nu_p^{\,2}\right)}}$$

$$K_1 := \left(1 - K_o + K_o^{\,2}\right)$$

$$H_4 := \frac{1 - \frac{E_t}{E_s}}{4 \cdot \left(1 - \nu_p^{\,2}\right) \cdot K_1}$$

$$H_3 := \left[\left(1 - 2 \cdot \nu_p\right) - \left(2 - \nu_p\right) \cdot K_o\right]$$

$$H_2 := \left[\left(2 - \nu_p\right) - \left(1 - 2 \cdot \nu_p\right) \cdot K_o\right]$$

$$H_1 := \left[1 + H_4 \cdot \left[H_2^{\,2} - 3 \cdot \left(1 - \nu_p^{\,2}\right)\right]\right]$$

$$C_3 := \left(1 + \frac{H_2 \cdot H_3 \cdot H_4}{\nu_p \cdot H_1}\right)$$

$$C_3 = -0.83$$

$$C_2 := \left(1 - \frac{H_3^{\,2} \cdot H_4}{H_1}\right)$$

$$C_2 = 0.321$$

$$C_1 := \left(1 - \frac{H_2^{\,2} \cdot H_4}{H_1}\right)$$

$$C_1 = 0.458$$

$$C_0 := \sqrt{\frac{C_1 \cdot C_2 - \nu_p^{\,2} \cdot C_3^{\,2}}{1 - \nu_p^{\,2}}}$$

$$C_0 = 0.283$$

$$\alpha_1 := \sqrt[4]{\frac{3 \cdot \left[\frac{C_2}{C_1} - \left(\nu_p \cdot \frac{C_3}{C_1}\right)^2\right]}{s^2 \cdot R^2}}$$

$$trial := \frac{\alpha_1 \cdot L_1}{\pi}$$

$trial = 0.413$

iterate on m until trial <= trial2

$m := 1$

$$trial2 := \sqrt{\frac{m}{2} \cdot (m + 1)}$$

$trial2 = 1$

$$p_m := p_{aa} \cdot C_0 \cdot \left[ \left( \frac{\alpha_1 \cdot L_1}{\pi \cdot m} \right)^2 + \frac{1}{4} \cdot \left( \frac{\pi \cdot m}{\alpha_1 \cdot L_1} \right)^2 \right]$$

$p_m = 4566.9 psi$

$p \equiv 4567 psi$ iterate on p until $p_m$ equals p

Summary

Axisymmetric Buckling

$p_m = 4566.9 psi$

Lobar Buckling

$p_{cr} = 12139.3 psi$

General Instability

$p_g = 9702.4 psi$

## Society of Naval Architects and Marine Engineers

### Submersible Vehicle Systems Design

$ksi := 1000psi$

### Input Section

| | |
|---|---|
| $L_f := 3.256in$ | Length between frames |
| $L_b := 115.532in$ | Length between bulkheads |
| $R := 18.882in$ | Radius of cylinder to centerline of shell |
| $t := 0.337in$ | shell thickness |
| $R_0 := R + .5 \cdot t$ | radius to outside of shell |

$R_0 = 19.051in$

| | |
|---|---|
| $E := 30000ksi$ | modulus of elasticity |
| $\sigma_y := 157 \cdot ksi$ | minimum yield stress of material |
| $\mu := 0.3$ | Poisson's ratio |

### Ring Stiffeners

| | |
|---|---|
| $t_w := 0.127in$ | thickness of web of ring stiffener |
| $depth := 2.315in$ | total height of ring stiffener |
| $bf := 1.552in$ | breadth of ring stiffener |
| $d := 0.305in$ | ring stiffener flange thickness |
| $b_2 := bf - t_w$ | breadth of ring stiffener minus the web thickness |

$c_1 := .5 \cdot \left( \frac{t_w \cdot depth^2 + b_2 \cdot d^2}{t_w \cdot depth + b_2 \cdot d} \right)$ first centroidal height of ring stiffener

$c_1 = 0.558in$

$c_2 := depth - c_1$ second centroidal height of ring stiffener

$c_2 = 1.757in$

$h := c_1 - d$ distance from centroid of ring stiffener to nearest edge of flange

$h = 0.253in$

$R_r := R - .5 \cdot t - c_2$ radius to centroid of ring stiffener

$R_r = 16.957in$

$A_r := (t_w \cdot depth + b_2 \cdot d)$ cross-sectional area of ring stiffener

$A_r = 0.729in^2$

$I_r := \left(\frac{1}{3}\right) \cdot \left(bf \cdot c_1^3 - b_2 \cdot h^3 + t_w \cdot c_2^3\right)$ moment of inertia of ring stiffener about its centroidal axis

$I_r = 0.312in^4$

**Combined Plate and Ring Stiffener**

$A_p := L_f \cdot t$ area of effective plate

$A_{sp} := A_p + A_r$ area of plate and ring stiffener

$H_c := depth + t$ height of combined plate and ring stiffener

$B_1 := L_f - t_w$ plate length minus the web thickness

$$c_{1c} := .5\left[\frac{t_w \cdot H_c^{\,2} + B_1 \cdot t^2 + b_2 \cdot d \cdot (2 \cdot H_c - d)}{t_w \cdot H_c + B_1 \cdot t + d \cdot b_2}\right]$$

neutral axis of combined plate and ring stiffener

from outer fiber of plate ($R_0$)

$$c_{1c} = 0.937\text{in}$$

$$R_c := R + .5 \cdot t - c_{1c}$$

radius to centroidal axis of combined ring stiffener and shell

$$R_c = 18.114\text{in}$$

$$I_e := \frac{1}{3} \cdot \left[L_f \cdot c_{1c}^{\,3} - B_1 \cdot (c_{1c} - t)^3 + bf \cdot (H_c - c_{1c})^3 - (bf - t_w) \cdot (H_c - c_{1c} - d)^3\right]$$

moment of inertia of combined plate and shell

$$I_e = 1.946\text{in}^4$$

a. Axisymmetric yielding

$$B := \frac{t_w \cdot t}{A_r + t_w \cdot t}$$

$$B = 0.055$$

$$\theta := 10 \cdot \left[12 \cdot \left(1 - \mu^2\right)\right]^{\frac{1}{4}} \cdot \left(\frac{L_f}{2 \cdot R}\right) \cdot \left(\frac{50 \cdot t}{R}\right)^{-\left(\frac{1}{2}\right)}$$

$$\theta = 1.659$$

$$N := \frac{\cosh(\theta) - \cos(\theta)}{\sinh(\theta) + \sin(\theta)}$$

$$N = 0.797$$

$$\beta := \frac{11 \cdot N}{\sqrt{50 \cdot \frac{t}{R}}} \cdot \left( \frac{t^2}{A_r + t_w \cdot t} \right)$$

$$\beta = 1.366$$

$$H := -\left( \frac{3 \cdot \sinh\left(\frac{\theta}{2}\right) \cdot \cos\left(\frac{\theta}{2}\right) + \cosh\left(\frac{\theta}{2}\right) \cdot \sin\left(\frac{\theta}{2}\right)}{\sinh(\theta) + \sin(\theta)} \right)$$

$$H = -0.818$$

$$p_y := \frac{\sigma_y \cdot \frac{t}{R}}{1 + H \cdot \left( \frac{0.85 - B}{1 + \beta} \right)}$$

$$p_y = 3863.5\,\text{lpsi}$$

**b. lobar buckling**

$$p_b := \left[ \frac{2.42 \cdot E}{\left(1 - \mu^2\right)^{\frac{3}{4}}} \right] \cdot \left[ \frac{\left(\frac{t}{2 \cdot R}\right)^{\frac{5}{2}}}{\left[ \frac{L_f}{2 \cdot R} - 0.45 \cdot \left(\frac{t}{2 \cdot R}\right)^{\frac{1}{2}} \right]} \right]$$

$$p_b = 1.341 \times 10^4\,\text{psi}$$

**c. General Instability**

$$m := \frac{\pi \cdot R}{L_b}$$

$$n := 1$$

$$p_{cr1}(n) := \frac{E \cdot t}{R} \cdot \frac{m^4}{\left(n^2 - 1 + \frac{m^2}{2}\right) \cdot \left(n^2 + m^2\right)^2} + \frac{\left(n^2 - 1\right) \cdot E \cdot I_e}{R^3 \cdot L_f}$$

Given

$n \geq 1$

$n_2 := \text{Minimize}(p_{cr1}, n)$

$n_2 = 1.654$ n must be an integer

$n_{2int} := \text{round}(n_2, 0)$

$n_{2int} = 2$

$$n_{2first} := \begin{cases} n_{2int} \cdot 100 & \text{if } n_{2int} = 1 \\ n_{2int} - 1 & \text{otherwise} \end{cases}$$

$$n_{2prime} := \begin{pmatrix} n_{2first} \\ n_{2int} \\ n_{2int} + 1 \\ n_{2int} + 2 \end{pmatrix}$$

$$p_{cr2} := \begin{pmatrix} p_{cr1}\left(n_{2prime_0}\right) \\ p_{cr1}\left(n_{2prime_1}\right) \\ p_{cr1}\left(n_{2prime_2}\right) \\ p_{cr1}\left(n_{2prime_3}\right) \end{pmatrix}$$

$p_{cr} := \min(p_{cr2})$

$p_{cr} = 8642.1\text{psi}$

**Summary**

Axisymmetric Buckling

$p_y = 3863.5$psi

Lobar Buckling

$p_b = 13410.8$psi

General Instability

$p_{cr} = 8642.1$psi

## MIT 13A Professional Summer Submarine Design Trends

### PROGRAM TO COMPUTE SUITABILITY OF SUBMARINE DESIGN PARAMETERS.

Ref: "Hull Material Trade Off Study", D Fox, Jan 94

Define input parameters:

$ksi \equiv 1000psi$

**Global Variable Inputs:**

| | |
|---|---|
| $e \equiv 0.0 \cdot in$ | Eccentricity |

Material:

| | |
|---|---|
| $\sigma_y \equiv 157000psi$ | Yield Strength |
| $E \equiv 30000ksi$ | Modulus of Elasiticity |
| $\nu \equiv 0.3$ | Poisson's Ratio |

**Geometry:**

| | |
|---|---|
| $R \equiv 18.882in$ | shell radius |
| $D \equiv 2 \cdot R$ | shell diameter |
| $L_f \equiv 3.256in$ | frame spacing |
| $L_s \equiv 115.532in$ | bulkhead spacing |
| $t_p \equiv 0.337in$ | shell thickness |
| $t_f \equiv 0.305in$ | flange tickness |
| $w_f \equiv 1.552in$ | flange width |
| $t_w \equiv 0.127in$ | web thickness |
| $h_w \equiv 2.01in$ | web height |

Compute areas:

$R_1 := R - \frac{t_p}{2}$ Frame Radius

$R_1 = 18.713in$

Frame flange, web area:

$A_f := t_f \cdot w_f$

$A_w := t_w \cdot h_w$

$A := A_f + A_w$ Frame Area = Flange + Web

$A = 0.729in^2$

PART 1 SHELL YIELDING

$B := \frac{t_w \cdot t_p}{A + t_w \cdot t_p}$ Area ratio

$B = 0.055$

$\theta := L_f \cdot \left[\frac{3 \cdot \left(1 - \nu^2\right)}{\left(R \cdot t_p\right)^2}\right]^{\frac{1}{4}}$ Slenderness parameter:

$\theta = 1.659$

$N := \frac{\cosh(\theta) - \cos(\theta)}{\sinh(\theta) + \sin(\theta)}$ Deflection coefficient:

$\beta := \frac{2 \cdot N}{A + t_w \cdot t_p} \cdot \left[\frac{1}{3 \cdot \left(1 - \nu^2\right)}\right]^{0.25} \cdot \sqrt{R \cdot t_p^{\,3}}$ Frame flexibility parameter:

$\beta = 1.366$

$$\Gamma := \frac{\left(1 - \frac{\nu}{2}\right) - B}{1 + \beta}$$ Frame deflection parameter:

$\Gamma = 0.336$

$$H_M := -2 \cdot \frac{\sinh\left(\frac{\theta}{2}\right) \cdot \cos\left(\frac{\theta}{2}\right) + \cosh\left(\frac{\theta}{2}\right) \cdot \sin\left(\frac{\theta}{2}\right)}{\sinh(\theta) + \sin(\theta)}$$ Bending effect (mem):

$H_M = -0.926$

$$H_E := -2 \cdot \left(\frac{3}{1 - \nu^2}\right)^{0.5} \cdot \frac{\sinh\left(\frac{\theta}{2}\right) \cdot \cos\left(\frac{\theta}{2}\right) - \cosh\left(\frac{\theta}{2}\right) \cdot \sin\left(\frac{\theta}{2}\right)}{\sinh(\theta) + \sin(\theta)}$$ Bending effect (bend):

$H_E = 0.391$

$$K := \frac{\sinh(\theta) - \sin(\theta)}{\sinh(\theta) + \sin(\theta)}$$ Bending efffect near frame:

$$p_{crl} := \left| \begin{array}{l}
f_y \leftarrow \sigma_y \\
P_0 \leftarrow 1\ \text{psi} \\
P_1 \leftarrow 1000\ \text{psi} \\
P_2 \leftarrow 5000\ \text{psi} \\
\text{delta} \leftarrow 5\ \text{psi} \\
\text{limit} \leftarrow 1\ \text{psi} \\
\text{conv} \leftarrow 1\ \text{psi} \\
j \leftarrow 0 \\
\text{while } j \le 200 \\
\quad \left| \begin{array}{l}
\text{for } i \in 0..2 \\
\quad \left| \begin{array}{l}
\sigma_{\phi\phi so} \leftarrow \frac{-P_i \cdot R}{t_p} \cdot \left[1 + \Gamma \cdot (H_M + \nu \cdot H_E)\right] \\
\sigma_{\phi\phi si} \leftarrow \frac{-P_i \cdot R}{t_p} \cdot \left[1 + \Gamma \cdot (H_M - \nu \cdot H_E)\right] \\
\sigma_{xxso} \leftarrow \frac{-P_i \cdot R}{t_p} \cdot (0.5 + \Gamma \cdot H_E) \\
\sigma_{xxsi} \leftarrow \frac{-P_i \cdot R}{t_p} \cdot (0.5 - \Gamma \cdot H_E) \\
\sigma_{\phi\phi fo} \leftarrow \frac{-P_i \cdot R}{t_p} \cdot \left[1 - \Gamma \cdot \left[1 + \nu \cdot \left(\frac{3}{1 - \nu^2}\right)^{0.5} \cdot K\right]\right] \\
\sigma_{\phi\phi fi} \leftarrow \frac{-P_i \cdot R}{t_p} \cdot \left[1 - \Gamma \cdot \left[1 - \nu \cdot \left(\frac{3}{1 - \nu^2}\right)^{0.5} \cdot K\right]\right]
\end{array} \right.
\end{array} \right.
\end{array} \right.$$

$$\sigma_{xxfo} \leftarrow \frac{-P_i \cdot R}{t_p}\left[0.5 - \Gamma \cdot \left(\frac{3}{1-\nu^2}\right)^{0.5} \cdot K\right]$$

$$\sigma_{xxfi} \leftarrow \frac{-P_i \cdot R}{t_p}\left[0.5 + \Gamma \cdot \left(\frac{3}{1-\nu^2}\right)^{0.5} \cdot K\right]$$

$$\sigma_{sy} \leftarrow \begin{pmatrix} \sigma_{\phi\phi so} \\ \sigma_{\phi\phi si} \\ \sigma_{xxso} \\ \sigma_{xxsi} \\ \sigma_{\phi\phi fo} \\ \sigma_{\phi\phi fi} \\ \sigma_{xxfo} \\ \sigma_{xxfi} \end{pmatrix}$$

$$\sigma_1 \leftarrow \sigma_{sy_0}$$

$$\sigma_2 \leftarrow \sigma_{sy_2}$$

$$\sigma_3 \leftarrow \sigma_{sy_5}$$

$$\sigma_4 \leftarrow \sigma_{sy_7}$$

$$\sigma_{SYM} \leftarrow \left(\sigma_1^2 - \sigma_1 \cdot \sigma_2 + \sigma_2^2\right)^{\frac{1}{2}}$$

$$\sigma_{SYF} \leftarrow \left(\sigma_3^2 - \sigma_3 \cdot \sigma_4 + \sigma_4^2\right)^{\frac{1}{2}}$$

$$\sigma_{SY} \leftarrow \max\left(\begin{pmatrix} \sigma_{SYM} \\ \sigma_{SYF} \end{pmatrix}\right)$$

$$stress_i \leftarrow \sigma_{SY}$$

$$test_i \leftarrow f_y - \sigma_{SY}$$

$$shel \leftarrow \frac{test_0}{conv}$$

$$dav \leftarrow \frac{test_1}{conv}$$

$$\text{break if } \left|stress_1 - f_y\right| \le limit$$

$$P_0 \leftarrow P_1 \text{ if } shel \cdot dav > 0$$

$$P_2 \leftarrow P_1 \text{ if } shel \cdot dav < 0$$

$$P_1 \leftarrow P_0 + \frac{P_2 - P_0}{2}$$

$$j \leftarrow j + 1$$

$$out_0 \leftarrow \frac{P_1}{conv}$$

$$out_1 \leftarrow j - 1$$

out

$$p_{cr1} = \begin{pmatrix} 3.712\times 10^{3} \\ 15 \end{pmatrix}$$

$$p_{crit} := p_{cr1_0} \cdot 1psi$$

$$p_{crit} = 3712psi$$

## PART 2 LOBAR BUCKLING

Windenberg Approx of Von Mises (1933)

Assumes n lobes = Pi*D/L

Collapse pressure:

$$P_{cLB} := \frac{2.42 \cdot E \cdot \left(\frac{t_p}{D}\right)^{2.5}}{\left(\frac{L_f}{D} - 0.45 \cdot \sqrt{\frac{t_p}{D}}\right) \cdot \left(1 - \nu^2\right)^{0.75}}$$

$$P_{cLB} = 13410.8psi$$

## PART 3 GENERAL INSTABILITY

Corrected Bryant Formula (1954) for better model test correlation

Pressure loading is:

$$P := \rho \cdot g \cdot D_t \cdot SF_{gi}$$

$$P = 1.674\times 10^{3}\ psi$$

Compute *effective* frame spacing:

$$\gamma := \frac{P}{2 \cdot E} \cdot \left(\frac{R}{t_p}\right)^2 \cdot \sqrt{3 \cdot \left(1 - \nu^2\right)}$$

$$\gamma = 0.145$$

Compute clear length:

$L_c := L_f - t_w$

$n_1 := 0.5\cdot\sqrt{1-\gamma}$

$n_1 = 0.462$

Web thickness:

$n_2 := 0.5\cdot\sqrt{1+\gamma}$

$n_2 = 0.535$

$t_w = 0.127\text{in}$

$$F_1 := \frac{4}{\theta}\cdot\left|\frac{\cosh(n_1\cdot\theta)^2 - \cos(n_2\cdot\theta)^2}{\frac{\cosh(n_1\cdot\theta)\cdot\sinh(n_1\cdot\theta)}{n_1} + \frac{\cos(n_2\cdot\theta)\cdot\sin(n_2\cdot\theta)}{n_2}}\right|$$

$F_1 = 0.959$ must be less than 1.00

F1 is almost a linear decreasing function for pressures from 1 to 10000 psi with an average value of 0.96. This will be used in the following analysis as the pressure is the unknown and therefore the above equations cannot be directly used.

$F_1 := 0.96$

Effective shell plate length:

$L_{eff} := L_c\cdot F_1 + t_w$

$L_{eff} = 3.131\text{in}$

Theoretical critical lobe number values are: $i := 0..2$

$A_{eff} := L_{eff}\cdot t_p$ Effective plate area:

$A_{eff} = 1.055\text{in}^2$

Circumferential Lobes

$$n := \begin{pmatrix} 2 \\ 3 \\ 4 \end{pmatrix}$$

Longitudinal Lobes:

$$m := \pi \cdot \frac{R}{L_s}$$

$$m = 0.513$$

$$y_{na} := \frac{\left(\frac{h_w + t_f}{2}\right) \cdot A_f - \left(\frac{h_w + t_p}{2}\right) \cdot A_{eff}}{A_{eff} + A_w + A_f}$$ Frame-plate neutral axis (ref web centre+ toward flange):

$$y_{na} = -0.387\text{in}$$

Uses Parallel Axis Theorm: Icor = I + Ad2

Moments of inertia for plate,flange,web:

$$I_p := \frac{L_{eff} \cdot t_p^3}{12}$$

$$I_w := \frac{t_w \cdot h_w^3}{12}$$

$$I_f := \frac{w_f \cdot t_f^3}{12}$$

$$I_{pcor} := I_p + A_{eff} \cdot \left[\left(\frac{t_p + h_w}{2}\right) + y_{na}\right]^2$$

$$I_{wcor} := I_w + A_w \cdot (y_{na})^2$$

$$I_{fcor} := I_f + A_f \cdot \left(\frac{t_f + h_w}{2} - y_{na}\right)^2$$

Total:

$I_{eff} := I_{pcor} + I_{wcor} + I_{fcor}$ Moment of Inertia corrected for neutral axis.

$I_{eff} = 1.92in^4$

The critical Elastic General Instability pressure is:

$$P_{cGI_i} := \frac{E \cdot t_p}{R} \cdot \frac{m^4}{\left[(n_i)^2 - 1 + \frac{m^2}{2}\right] \cdot \left[(n_i)^2 + m^2\right]^2} + \frac{\left[(n_i)^2 - 1\right] \cdot E \cdot I_{eff}}{R^3 \cdot L_f}$$

Min Pressure:

$$P_{cGI} = \begin{pmatrix} 8.536 \times 10^3 \\ 2.107 \times 10^4 \\ 3.942 \times 10^4 \end{pmatrix} psi \qquad n := \begin{pmatrix} 2 \\ 3 \\ 4 \end{pmatrix}$$

$P_{cGI} := \min(P_{cGI})$

$P_{cGI} = 8535.8psi$

$n_{gi} := 2$

**Summary**

Axisymmetric Buckling

$p_{crit} = 3712psi$

Lobar Buckling

$P_{cLB} = 13410.8psi$

General Instability

$P_{cGI} = 8535.8psi$

$n_{gi} = 2$

## Analytic Solution

### Definitions

$ksi := 6.894757 \cdot 10^{6} Pa$

| | |
|---|---|
| $E := 30000 ksi$ | Modulus of Elasticity |
| $R := 18.882 in$ | Radius of cylinder to centerline of shell |
| $D := 2 \cdot R$ | Diameter of cylinder |
| $\sigma_y := 157 ksi$ | Yield strength |
| $L := 3.256 in$ | Length of supported cylinder |
| $L_b := 115.532 in$ | Distance between bulkheads |
| $\mu := .3$ | Poison's ratio for Fe/Steel |
| $t := 0.337 in$ | Shell thickness |

### Ring Stiffeners

| | |
|---|---|
| $t_w := 0.127 in$ | thickness of web of ring stiffener |
| $H := 2.315 in$ | height of ring stiffener |
| $b := t_w$ | faying width of stiffener (from P&S for I beam stiffener) |
| $bf := 1.552 in$ | breadth of ring stiffener |
| $b_2 := bf - t_w$ | breadth of ring stiffener minus the web thickness |
| $d := 0.305 in$ | ring stiffener flange thickness |
| $L_{bnash} := L - bf$ | distance from flange edges |

$c_1 := .5 \cdot \left( \frac{t_w \cdot H^2 + b_2 \cdot d^2}{t_w \cdot H + b_2 \cdot d} \right)$ first centroidal height of ring stiffener

$c_1 = 0.558in$

$c_2 := H - c_1$ second centroidal height of ring stiffener

$c_2 = 1.757in$

$h := c_1 - d$ distance from centroid of ring stiffener to nearest edge of flange

$h = 0.253in$

$R_r := R - .5 \cdot t - c_2$ radius to centroid of ring stiffener

$R_r = 16.957in$

$A_r := (t_w \cdot H + b_2 \cdot d)$ cross-sectional area of ring stiffener

$A_r = 0.729in^2$

$I_r := \left(\frac{1}{3}\right) \cdot \left(bf \cdot c_1^3 - b_2 \cdot h^3 + t_w \cdot c_2^3\right)$ moment of inertia of ring stiffener about its centroidal axis

$I_r = 0.312in^4$

$A_{eff} := A_r \cdot \left(\frac{R}{R_r}\right)$ effective area of stiffener eqn [24a] from P&S

$A_{eff} = 0.811in^2$

$\alpha := \frac{A_{eff}}{L \cdot t}$ ratio of effective frame area to shell area eqn [62] P&S

$\alpha = 0.739$

$\beta := \frac{b}{L}$ ratio of faying width to frame spacing eqn [62] P&S

$\beta = 0.039$

**Combined Plate and Ring Stiffener**

$A_p := L \cdot t$ area of effective plate

$A_{sp} := A_p + A_r$ area of plate and ring stiffener

$H_c := H + t$ height of combined plate and ring stiffener

$H_c = 0.221\text{ft}$

$B_1 := L - t_w$ plate length minus the web thickness

$$c_{1c} := .5\left[\frac{t_w \cdot H_c^2 + B_1 \cdot t^2 + b_2 \cdot d \cdot (2 \cdot H_c - d)}{t_w \cdot H_c + B_1 \cdot t + d \cdot b_2}\right]$$

neutral axis of combined plate and ring stiffener

from outer fiber of plate ($R_0$)

$c_{1c} = 0.937\text{in}$

$R_c := R + .5 \cdot t - c_{1c}$ radius to centroidal axis of combined ring stiffener and shell

$R_c = 18.114\text{in}$

$$I_e := \frac{1}{3} \cdot \left[L \cdot c_{1c}^3 - B_1 \cdot (c_{1c} - t)^3 + bf \cdot (H_c - c_{1c})^3 - (bf - t_w) \cdot (H_c - c_{1c} - d)^3\right]$$

moment of inertia of combined plate and shell

$I_e = 1.946\text{in}^4$

**a. Buckling of unreinforced shells**

von Mises bucking pressure:

$n := 1$ guess at number of waves around the circumference

$$p_{ur1}(n) := \left(\frac{E \cdot t}{R}\right) \cdot \left[\frac{1}{n^2 + .5 \cdot \left(\frac{\pi \cdot R}{L}\right)^2}\right] \cdot \left[\left[\frac{\left(\frac{\pi \cdot R}{L}\right)^4}{\left[n^2 + \left(\frac{\pi \cdot R}{L}\right)^2\right]^2}\right] + \left[\frac{\left(\frac{t}{R}\right)^2}{12 \cdot \left(1 - \mu^2\right)}\right] \cdot \left[n^2 + \left(\frac{\pi \cdot R}{L}\right)^2\right]^2\right]$$

Given

$n \geq 1$

$n_1 := \text{Minimize}(p_{ur1}, n)$

$n_1 = 10.14$ n must be an integer

$n_{1int} := \text{round}(n_1, 0)$

$n_{1int} = 10$

$$n_{1prime} := \begin{pmatrix} n_{1int} - 1 \\ n_{1int} \\ n_{1int} + 1 \\ n_{1int} + 2 \end{pmatrix}$$

$$p_{ur1} := \begin{pmatrix} p_{ur1}(n_{1prime_0}) \\ p_{ur1}(n_{1prime_1}) \\ p_{ur1}(n_{1prime_2}) \\ p_{ur1}(n_{1prime_3}) \end{pmatrix}$$

$p_{ur} := \min(p_{ur1})$

$p_{ur} = 1.214 \times 10^4$ psi

## b. Axisymmetric Buckling

$$
\begin{aligned}
p_{cab} := \;& \gamma \leftarrow 0 \\
& \text{limit} \leftarrow 10\text{psi} \\
& \text{test} \leftarrow 0\text{psi} \\
& \text{conv} \leftarrow 1\text{psi} \\
& j \leftarrow 0 \\
& \text{while } j \le 20 \\
& \quad \eta_1 \leftarrow \frac{1}{2}\cdot\sqrt{1-\gamma} \\
& \quad \eta_2 \leftarrow \frac{1}{2}\cdot\sqrt{1+\gamma} \\
& \quad \theta \leftarrow \sqrt[4]{3\cdot\left(1-\mu^2\right)}\cdot\frac{L}{\sqrt{R\cdot t}} \\
& \quad F_1 \leftarrow \frac{4}{\theta}\cdot\frac{\cosh\left(\eta_1\cdot\theta\right)^2-\cos\left(\eta_2\cdot\theta\right)^2}{\frac{\cosh\left(\eta_1\cdot\theta\right)\cdot\sinh\left(\eta_1\cdot\theta\right)}{\eta_1}+\frac{\cos\left(\eta_2\cdot\theta\right)\cdot\sin\left(\eta_2\cdot\theta\right)}{\eta_2}} \\
& \quad F_2 \leftarrow \frac{\frac{\cosh\left(\eta_1\cdot\theta\right)\cdot\sin\left(\eta_2\cdot\theta\right)}{\eta_2}+\frac{\sinh\left(\eta_1\cdot\theta\right)\cdot\cos\left(\eta_2\cdot\theta\right)}{\eta_1}}{\frac{\cosh\left(\eta_1\cdot\theta\right)\cdot\sinh\left(\eta_1\cdot\theta\right)}{\eta_1}+\frac{\cos\left(\eta_2\cdot\theta\right)\cdot\sin\left(\eta_2\cdot\theta\right)}{\eta_2}} \\
& \quad F_3 \leftarrow \sqrt{\frac{3}{1-\mu^2}}\cdot\frac{\frac{\cos\left(\eta_2\cdot\theta\right)\cdot\sin\left(\eta_2\cdot\theta\right)}{\eta_2}-\frac{\cosh\left(\eta_1\cdot\theta\right)\cdot\sinh\left(\eta_1\cdot\theta\right)}{\eta_1}}{\frac{\cosh\left(\eta_1\cdot\theta\right)\cdot\sinh\left(\eta_1\cdot\theta\right)}{\eta_1}+\frac{\cos\left(\eta_2\cdot\theta\right)\cdot\sin\left(\eta_2\cdot\theta\right)}{\eta_2}} \\
& \quad F_4 \leftarrow \sqrt{\frac{3}{1-\mu^2}}\cdot\frac{\frac{\cosh\left(\eta_1\cdot\theta\right)\cdot\sin\left(\eta_2\cdot\theta\right)}{\eta_2}-\frac{\sinh\left(\eta_1\cdot\theta\right)\cdot\cos\left(\eta_2\cdot\theta\right)}{\eta_1}}{\frac{\cosh\left(\eta_1\cdot\theta\right)\cdot\sinh\left(\eta_1\cdot\theta\right)}{\eta_1}+\frac{\cos\left(\eta_2\cdot\theta\right)\cdot\sin\left(\eta_2\cdot\theta\right)}{\eta_2}} \\
& \quad A \leftarrow \frac{\left(1-\frac{\mu}{2}\right)\cdot\alpha}{\alpha+\beta+\left(1-\beta\right)\cdot F_1} \\
& \quad \text{denom1} \leftarrow A^2\cdot\left[F_2^{\,2}+F_2\cdot F_4\cdot\left(1-2\cdot\mu\right)\cdot\left(\sqrt{\frac{0.91}{1-\mu^2}}\right)+F_4^{\,2}\cdot\left(1-\mu+\mu^2\right)\cdot\left(\frac{0.91}{1-\mu^2}\right)\right] \\
& \quad \text{denom2} \leftarrow \left(\frac{3}{2}\right)\cdot A\cdot\left(F_2-\mu\cdot F_4\cdot\sqrt{\frac{0.91}{1-\mu^2}}\right) \\
& \quad p_{c2} \leftarrow \frac{\sigma_y\cdot\left(\frac{t}{R}\right)}{\sqrt{\frac{3}{4}+\text{denom1}-\text{denom2}}} \\
& \quad \text{break if } \left|p_{c2}-\text{test}\right| \le \text{limit} \\
& \quad \gamma \leftarrow \frac{p_{c2}}{2\cdot E}\cdot\left[\sqrt{3\cdot\left(1-\mu^2\right)}\right]\cdot\left(\frac{R}{t}\right)^2 \\
& \quad \text{test} \leftarrow p_{c2} \\
& \quad j \leftarrow j+1 \\
& \quad \text{out}_0 \leftarrow \frac{p_{c2}}{\text{conv}} \\
& \quad \text{out}_1 \leftarrow j \\
& \text{out}
\end{aligned}
$$

$$p_{cab} = \begin{pmatrix} 4080.3 \\ 2 \end{pmatrix}$$

$$p_{axiy} := p_{cab_0} \cdot 1psi$$

$$p_{axiy} = 4080.3psi$$

**c. Asymmetric Collapse (Lobar buckling)**

Windenberg Approx of Von Mises (1933)

Assumes n lobes = Pi*D/L

Collapse pressure:

$$p_{cLB} := \frac{2.42 \cdot E \cdot \left(\frac{t}{D}\right)^{2.5}}{\left(\frac{L}{D} - 0.45 \cdot \sqrt{\frac{t}{D}}\right) \cdot \left(1 - \mu^2\right)^{0.75}}$$

$$p_{cLB} = 13410.8psi$$

## d. General Instability of shells and rings

$$\lambda := \frac{\pi \cdot R}{L_b}$$

$$n := 1$$

$$p_{cGI}(n) := \frac{E \cdot t}{R} \cdot \frac{\lambda^4}{\left(n^2 - 1 + \frac{\lambda^2}{2}\right) \cdot \left(n^2 + \lambda^2\right)^2} + \frac{\left(n^2 - 1\right) \cdot E \cdot I_e}{R^3 \cdot L}$$

Given

$$n \geq 1$$

$n_2 := \text{Minimize}(p_{cGI}, n)$

$n_2 = 1.654$ n must be an integer

$n_{2int} := \text{round}(n_2, 0)$

$n_{2int} = 2$

$$n_{2prime} := \begin{pmatrix} n_{2int} - 1 \\ n_{2int} \\ n_{2int} + 1 \\ n_{2int} + 2 \end{pmatrix}$$

$$p_{cgi2} := \begin{pmatrix} p_{cGI}(n_{2prime_0}) \\ p_{cGI}(n_{2prime_1}) \\ p_{cGI}(n_{2prime_2}) \\ p_{cGI}(n_{2prime_3}) \end{pmatrix}$$

$p_{cgibryant} := \min(p_{cgi2})$

$p_{cgibryant} = 8.642 \times 10^3 \text{ psi}$

**Summary**

Lobar Buckling

$p_{cLB} = 13410.8 \text{psi}$

Axisymmetric Buckling

$p_{axiy} = 4080.3 \text{psi}$

General Instability

$p_{cgibryant} = 8642.1 \text{psi}$

$n_{2int} = 2$

This page intentionally left blank