COMP-00018

TR-96-02

TECHNICAL REPORT

A Review of Groupware Technologies

21 May 1996

Prepared by:

The Air Force C4 Agency Directorate of Interoperability and Technology
(HQ AFC4A/TN)
Scott Air Force Base, Illinois

DISTRIBUTION A: Approved for public release; distribution unlimited. Refer requests for this document to HQ AFC4A/TNA, 203 W Losey St, Room 2000, Scott AFB, IL 62225-5238.

Form SF298 Citation Data

Report Date ("DD MON YYYY")	Report Type	Dates Covered (from... to) ("DD MON YYYY")
21051996	N/A	

Title and Subtitle Technical Report: A Review of Groupware Technologies	**Contract or Grant Number**
	Program Element Number
Authors	**Project Number**
	Task Number
	Work Unit Number
Performing Organization Name(s) and Address(es) IATAC Information Assurance Technology Analysis Center 3190 Fairview Park Drive Falls Church VA 22042	**Performing Organization Number(s)**
Sponsoring/Monitoring Agency Name(s) and Address(es)	**Monitoring Agency Acronym**
	Monitoring Agency Report Number(s)
Distribution/Availability Statement Approved for public release, distribution unlimited	
Supplementary Notes	
Abstract	
Subject Terms	
Document Classification unclassified	**Classification of SF298** unclassified
Classification of Abstract unclassified	**Limitation of Abstract** unlimited
Number of Pages 174	

REPORT DOCUMENTATION PAGE

Form Approved
OMB No. 074-0188

Public reporting burden for this collection of information is estimated to average 1 hour per response, including the time for reviewing instructions, searching existing data sources, gathering and maintaining the data needed, and completing and reviewing this collection of information. Send comments regarding this burden estimate or any other aspect of this collection of information, including suggestions for reducing this burden to Washington Headquarters Services, Directorate for Information Operations and Reports, 1215 Jefferson Davis Highway, Suite 1204, Arlington, VA 22202-4302, and to the Office of Management and Budget, Paperwork Reduction Project (0704-0188), Washington, DC 20503

1. AGENCY USE ONLY (Leave blank)

2. REPORT DATE
5/21/96

3. REPORT TYPE AND DATES COVERED
Report

4. TITLE AND SUBTITLE
Technical Report: A Review of Groupware Technologies

5. FUNDING NUMBERS

6. AUTHOR(S)
The Air Force C4 Agency Directorate of Interoperability and Technology

7. PERFORMING ORGANIZATION NAME(S) AND ADDRESS(ES)

IATAC
Information Assurance Technology Analysis
Center
3190 Fairview Park Drive
Falls Church VA 22042

8. PERFORMING ORGANIZATION REPORT NUMBER

9. SPONSORING / MONITORING AGENCY NAME(S) AND ADDRESS(ES)

Defense Technical Information Center
DTIC-IA
8725 John J. Kingman Rd, Suite 944
Ft. Belvoir, VA 22060

10. SPONSORING / MONITORING AGENCY REPORT NUMBER

11. SUPPLEMENTARY NOTES

12a. DISTRIBUTION / AVAILABILITY STATEMENT

12b. DISTRIBUTION CODE
A

13. ABSTRACT ***(Maximum 200 Words)***

This is an Air Force Technical report written by the Air Force C4 Agency and the HQ Air Force/SC'IT (Technology Division). This report takes a broad look at the groupware concept and present an assessment on how groupware can be best incorporated into Air Force applications. For this report, groupware is broken into the following categories: electronic mail (e-mail); electronic meeting systems; calendaring/scheduling l electronic conferencing systems; document-based groupware; intranet; workflow and document management systems

14. SUBJECT TERMS
COMP, C4, AF, Directorate

15. NUMBER OF PAGES

16. PRICE CODE

17. SECURITY CLASSIFICATION OF REPORT
Unclassified

18. SECURITY CLASSIFICATION OF THIS PAGE
UNCLASSIFIED

19. SECURITY CLASSIFICATION OF ABSTRACT
UNCLASSIFIED

20. LIMITATION OF ABSTRACT
None

APPROVING/RELEASING AUTHORITY

A REVIEW OF GROUPWARE TECHNOLOGIES

21 May 1996

Authors:

d c Brashares, Maj, USAF — HQ AFC4A/TNAA
Chief, Technology Insertion Branch
brashare@afc4a.safb.af.mil

John A. Root — HQ AFC4A/TNAA
Technical Writer
rootja@afc4a.safb.af.mil

John D. Rogers, GS-12, DAF — HQ AFC4A/TNAA
Electrical Engineer
rogersj@afc4a.safb.af.mil

Review Board Chair:

Douglas W. Gray, GM-13, DAF — HQ AFC4A/TNSDE
Project Manager, Electronic Systems
grayd@afc4a.safb.af.mil

Approved:

Wayne F. Wilson, GM-15, DAF — HQ AFC4A/TNA
Chief, C4 Systems Standards & Validation Division
wilsonw@afc4a.safb.af.mil

Approved for Release:

David L. Rakestraw, Col, USAF — HQ AFC4A/TN
Director, Interoperability & Technology Directorate
rakestrw@afc4a.safb.af.mil

THIS PAGE INTENTIONALLY LEFT BLANK

EXECUTIVE SUMMARY

Groupware has evolved rapidly over the past decade to where there are hundreds of products available within the groupware sphere. For this report, the following definition is used:

> **Groupware:** The integrated use of networked application software to allow shared access to files needed for group communication, joint planning, joint decision making, and other collaborative efforts.[1]

HQ Air Force/SCTT (Technology Division) tasked HQ Air Force C4 Agency to take a broad look at the groupware concept and present an assessment on how groupware can be best incorporated into Air Force applications.

For this report, groupware is broken into the following categories:

- electronic mail (e-mail)
- calendaring/scheduling
- document-based groupware
- workflow and document management systems
- electronic meeting systems
- electronic conferencing systems
- intranet

Other topics discussed include the migration toward the Defense Messaging System (DMS), the release of Lotus Notes 4.0, and the initial release of Microsoft Exchange Server.

The DMS concept provides DoD a messaging system which will furnish security, reliability, attribution, and robustness after migration from AUTODIN and current e-mail systems. DMS compliance is a primary and critical selection criterion for users when selecting e-mail systems. At present, the scope of DMS does not include groupware functionality besides e-mail; however, users' groupware needs should be included in the selection of DMS products. DoD policy, as stated by Mr Emmett Paige, Jr., ASD(C3I), is very clear:

> There will be one seamless, end-to-end global electronic messaging service within the DoD. This service, provided by the DMS, will meet all Department messaging requirements as outlined by the Joint Staff and is consistent with national objectives for interoperable electronic messaging.[2]

As of publication date, no products have been certified by the Joint Interoperability Testing Center, Ft Huachuca, AZ, as being DMS compliant. The DISA-Loral contract presently contains three e-mail systems which have priority for scheduling and testing of DMS compliance: Lotus Notes, Microsoft Exchange, and ESL. Today, if an Air Force user buys e-mail/groupware products, the user should select one of the products on the DISA-Loral

---

[1] **Vargo, John, and Ray Hunt,** *Telecommunications in Business: Strategy and Applications,* **Irwin, 1996, p 286.**
[2] **Paige, Emmett, Jr., "Electronic Messaging Policy - Implementation Guidance," Memorandum for Secretaries of the Military Departments, Under Secretaries of Defense, Assistant Secretaries of Defense, Directors of the Defense Agencies, and Director, Joint Staff, 9 March 1995.**

contract. While messaging functionality within groupware is being standardized, other functions such as calendaring, scheduling, and document-based groupware are not standardized.

One ongoing debate is whether the Air Force should select a single, preferred e-mail product. HQ Air Combat Command has requested the Air Force to identify a preferred solution to reduce infrastructure support and training requirements and for standardization purposes. The real question is: "How is the typical Workgroup structured?" Most organizations are comprised of many workgroups, frequently functionally based. Therefore, DMS compliancy, a workgroup's structure, and the functionality required, are what count.

For example, if HQ Air Force C4 Agency decides that Notes has the necessary functionality and is cost effective, fine. If the Air Staff decides that Exchange is the appropriate product for its needs, that's fine as well. Therefore, the Air Force does *not* have to migrate toward a certain groupware product for *technical* reasons as long as products used are DMS-compliant as applicable; however, a preferred-solution approach has a lot of merit in helping to reduce infrastructure support requirements. DMS is not envisioned to allow someone at the Air Staff to use Notes to schedule a meeting with the Air Force C4 Agency even if both users are using Notes. Messaging-yes; calendaring, scheduling, and file replication-no.

Conferencing, including desktop video teleconferencing (VTC), provides opportunities for savings in time and money associated with traveling to meetings. Standards are being promulgated and products are available via TRW's Army Desktop VTC contract for both LAN-based and ISDN-based products. As a cautionary note, don't assume that all products listed in a contract such as this are interoperable; procurers are strongly advised to know their interoperability needs and perform interoperability testing before making purchases. ASD (C3I) policy, 31 October 1994, states that the *Industry Profile for* VTC (formerly known as the *Corporation for Open Systems Videoteleconferencing Profile*) is the official DoD standards document for VTC procurement.

The *intranet* concept is a current Internet-related application of high interest. An intranet is a private World-Wide Web-based network, usually protected by firewalls,[3] that allows employees and business partners to be connected to vital corporate information. In essence, the ease in providing information from an organization to the outside world via the Web is being applied for internal corporate business as well. Intranets help the bottom lines of organizations by necessitating fewer help desk personnel, lowering costs of incoming 800 phone lines, and generating business contacts. In addition, intranets allow people quicker access to relevant information and allow collaboration. Finally, intranets are extremely easy to

---

[3] A tire wall is a device or groups of devices placed between a secured network (your internal network) and a nonsecured network (the Internet). A firewall's many tasks include authenticating users, limiting incoming and outgoing traffic, logging traffic information, producing traffic reports, and preventing unwanted access to your services. Boyle, Padraic, 'Network Firewalls: Your Defensive Line," *PC Magazine Network Edition,* **12 March 1996, p NE4.**

use and set up, especially when compared to typical client/server architectures in an organization.

Groupware clearly has tremendous potential for **DoD**. Most organizations using groupware products are convinced that the communication process is positively affected and the bottom line is improved. Organizations must know their true communications needs and understand the capabilities of groupware products. Proper up-front planning with management, users, and information systems specialists is necessary to find the right match of groupware functionality for an organization to support its objectives. Interoperability testing is essential when integration of different products is desired.

THIS PAGE INTENTIONALLY LEFT BLANK

TABLE OF CONTENTS

1. INTRODUCTION ..... ‘1

1.1 Background 1

1.2 Tasking 1

1.3 scope 2

1.4 Definitions 2

1.5 Groupware Categories 3

1.6 Groupware Considerations 4

1.7 Conclusions 5

2. ELECTRONIC MAIL (E-MAIL) 7

2.1 Introduction 7

2.2 Benefits 7

2.3 Background 8

2.4 Criteria for Selecting E-mail Software 9

2.5 Connectivity Paradigms 10

2.6 Use of GroupWise within the Air Force C4 Agency (AFC4A) 11

2.7 Defense Message System @MS) 12

2.8 Conclusions 16

3. CALENDAR/SCHEDULING 19

3.1 Introduction 19

3.2 Benefits 20

3.3 Air Force Usage and the DMS-compliance Issue 20

3.4 Selecting an Enterprise Scheduling Product 20

3.5 Selected Enterprise-wide Scheduling Products 21

4. DOCUMENT-BASED GROUPWARE 23

4.1 Introduction 23

4.2 Benefits 23

4.3 General Comments on Lotus Notes 4.0 24

4.4 Corporate Usage of Lotus Notes 26

4.5 General Comments on Microsoft Exchange 27

4.6 General Comments on Novell's GroupWise XTD 29

4.7 Groupware: The DMS Compliancy Issue 30

4.8 Conclusions 31

5. ELECTRONIC MEETING SYSTEMS (GROUP SUPPORT SYSTEMS) 33

5.1 Introduction 33

5.2 Benefits 34

5.3 Common Pitfalls and Tips 34

5.4 EMS Usage Sampling 35

5.5 Criteria for Selecting an EMS 36

5.6 USTRANSCOM JTCC Facility 37

5.7 A DoD Logistics Example 40

5.8 Conclusions 41

6. ELECTRONIC CONFERENCING 43

6.1 Introduction 43

6.2 Benefits 44

6.3 An Industry Profile for VTC 45

6.4 Studio Video Teleconferencing (VTC) 45

6.5 Desktop VTC 47
6.5.1 WAN-based (ISDN and POTS) VTC Systems 49
6.5.2 LAN-based Desktop VTC Systems 50
6.5.3 The Army's Desktop VTC Contract 52
6.5.4 Final Comments on Desktop VTC 53

6.6 Virtual Conferencing 55

6.7 Document/Audio Conferencing 56
6.7.1 General Information 56
6.7.2 Representative Products 57

6.8 Conclusions 59

7. INTRANET: PRIVATE WEB SERVERS 61

7.1 Introduction 61

7.2 Benefits 62

7.3 Webware and Groupware Comparisons 63

7.4 Intranet Architecture 65

7.5 An Air Force Example 66

7.6 Intranet Collaboration and the Internet 67

7.7 Vendor Intranet Offerings 67

7.8 Conclusions 68

8. WORKFLOW MANAGEMENT AND DOCUMENT MANAGEMENT SYSTEMS 69

8.1 Introduction 69

8.2 Benefits 70

8.3 Workflow - Groupware Differentiation 70

8.4 Workflow Tools 70
8.4.1 Production and Ad Hoc Categories 71
8.4.2 Applications 71

8.5 Document Management Systems 72
8.5.1 Document Sharing and Security 72
8.5.2 Interoperability Issues 73

8.5.3 Groupware Selection 74
8.5.4 A Business Application 75
8.5.5 An Air Force Application 76

8.6 Conclusions 77

9. MISCELLANEOUS TOPICS 79

9.1 Standards 79

9.2 Product Ease of Use and Training 80

9.3 costs 82

9.4 Information Protection 83

9.5 Security Items of Interest for Groupware Users ..a 83

10. RECOMMENDATIONS/CONCLUSIONS 87

APPENDICES

Appendix A: Various Groupware Definitions 91
Appendix B: Bibliography 93
Appendix C: World-Wide Web Sites of Interest 103
Appendix D: DMS Management, Technical, and Tactical Objectives 113
Appendix E: Initial Operational Test and Evaluation (IOT&E) Sites for DMS Products 115
Appendix F: Videoconferencing Cost Justification 117
Appendix G: HQ AF C4 Agency VTC Activities 123
Appendix H: CGI-based Application Tips 125
Appendix I: Nine Steps to Intranet Success 127
Appendix J: Software Technology Support Center's Process Workflow Workshop 129
Appendix K: On Overview of the Report, Groupware: Myths and Realities 13 1
Appendix L: A Compendium of Various Groupware Products 133
Appendix M: DoD Directive C-5200.5, Para D-Communications Policy for the Department of Defense 161

1. Introduction

1.1 Background

Industry and government agencies continue to place increasing emphasis on corporate efficiency. The need to do more with shrinking resources has resulted in a concerted effort to improve efficiency through leadership and such programs as work-flow assessment, process re-engineering, quality management, and others. When applied correctly, these programs improve efficiency by eliminating duplication of effort, encouraging the use of shared data, and improving lines of communication. Where possible, given economic constraints and corporate culture, technology has been installed and used to support the workers.

The largest technological impact in the workplace has been in the field of improved data communications, particularly in the area of data networks. What started out with real-time database access and electronic mail has snow-balled into a broad class of applications known as ***groupware.*** The concepts of groupware and data mining via Internet resources are further changing the way we view and use personal computers by turning them into communication devices vice computational devices. These concepts will increase the demand for ubiquitous, robust, secure, high-bandwidth, and ultra-fast channels on the information superhighway.

This demand is not limited to fixed office environments. Preliminary lessons-learned memos drafted by officers deployed for Operation Joint Endeavor indicate that some communications resources, sometimes previously deemed as luxuries, are now viewed as basic requirements along with field gear and weapons. Applications such as logistics, finance, and supply need access to bandwidth just as much as classified communications. The officers found that combat support personnel arriving in Bosnia are expecting to have similar computing and communications assets as at their home bases. Among the requirements are video teleconferencing, e-mail, and Internet access, all components of an enterprise-wide groupware or collaborative strategy. The Army's 5th Signal Command is answering these communications needs by installing a vast array of linked IP and X.25 networks in Bosnia.[4]

1.2 Tasking

As a result of Air Staff interest in the field of information exchange technology, HQ AF/SCTT tasked HQ Air Force Command, Control, Communications, and Computer Agency (AFC4A) to conduct a technology overview of the groupware concept. Items to be included are:

- Products and tools available, advertised capabilities, and usage within the work environment.
- The maturity of various facets of the technology and any compromises users have to make.
- Hardware/software costs (initial and life cycle) and integration issues.
- Training and migration issues.
- Other DoD efforts.

---

[4] **Constance, Paul, "GIs demand compleat field** *gear: boots, rifle, e-mail," Government Computing News,* **29 April 1996, p 8.**

- DoD and Air Force policy issues.

1.3 scope

This report provides definitions and an overview of the groupware concept and the major categories included in groupware. It describes the functions provided by different types of groupware applications, how groupware is used in industry, and possible applications within the Air Force. It does not provide a comprehensive product review but does highlight certain commercial products as examples to introduce current groupware capabilities. Particular focus is given to DISA's Defense Messaging System and its importance as DoD migrates toward a more robust and secure messaging environment.

1.4 Definitions

The term groupware became prominent in the information technology professionals' vocabulary around 1989 when Lotus began selling Notes and virtually single-handedly created a new category of computing called groupware. Groupware is one of those terms which has been difficult to define precisely.' A very basic definition of groupware, as provided by authors Jerry FitzGerald and Alan Dennis, is:

> Software that helps groups of people to work together more productively.[6]

A more detailed definition, as provided by authors John Vargo and Ray Hunt, is:

> The integrated use of networked application software to allow shared access to files needed for group communication, joint planning, joint decision making, and other collaborative efforts. [7]

The terms groupware and collaborative computing are sometimes used interchangeably. For purposes of this document, groupware is considered a subset of a broader concept called collaborative computing which is defined as:

> Computing technology that permits two or more people to communicate with each other, to share information, or to coordinate their activities.'

The differentiation is that groupware is ***software*** that permits communication, information sharing, and collaboration; collaborative computing is the ***technology*** that permits these activities to take place.'

---

[5] See Appendix A for a sampling of definitions. .
[6] FitzGerald and Dennis, *Business Data Communications and Networking,* fifth edition, p 34.
[7] Vargo and Hunt, p 286.
[8] *Groupware: Myths and Realities,* Creative Networks, Inc., 1995, p 1-2.
[9] Creative Nehuorks, p l-2.

1.5 Groupware Categories

In this document, groupware will be examined via five major categories as well as two complementary areas:

Major Categories

- Electronic mail (e-mail).
- Calendaring/scheduling.
- Document-based groupware.
- Electronic meeting systems (group support systems).
- Electronic conferencing systems.

Complementary Areas

- Intranet.
- Workflow and document management systems.

To help put these categories in perspective, the following figure shows the generic intended uses of each. [10]

	Same Tie	Different Time
Same Place	Group support systems	Intranet Group support systems Calendaring/scheduling
Different Place	Audio/document conferencing Video teleconferencing Desktop VTC Workflow/Document management Intranet	Electronic mail Document-based groupware Calendaring/scheduling Workflow/Document management Intranet

Figure 1: Groupware Categories in Perspective

Although electronic data interchange (EDI) can be a natural extension to some groupware activities, it is outside the scope of this document. EDI is the computer-to-computer exchange of highly structured business-related transaction sets. The receiving computer automatically acts on the transaction set it receives without human intervention. A good current example involves a dozen university and corporate libraries using EDI over the Internet to buy books. Yale University, Westinghouse Electric Corporation, and Massachusetts General Hospital are among those receiving steep discounts from about 5,700 publishers. Savings are made

[10] FitzGerald and Dennis, p 34.

possible by using the ANSI **X12**[11] transaction set 820 to electronically send purchase order and payment processing information to a Web site managed by Bank One Services Corporation, Columbus, OH. The Bank One server sends appropriate formatted information to the Automated Clearinghouse. This electronic processing is vastly quicker and cheaper than the traditional paper processing approach. [12]

1.6 Groupware Considerations

Much preparatory work has to be done within an organization before groupware can be installed and used successfully. Because there are hundreds of products that vendors classify as groupware or that fit into a particular category of groupware, working with a groupware consultant or an information systems specialist knowledgeable about groupware is paramount for implementation. Matching the true capabilities of the groupware product with the communications requirements of an organization is no trivial task. Knowing the corporate culture, i.e., do organizational members believe it is important to share or hoard information, may even determine the extent that groupware should be implemented in any organization. When in doubt, low-scale test implementations are invaluable as long as an appropriate set of open-minded individuals are involved along with readily available vendor support and total management support.

Organizations are continually focusing on their business processes and how to improve them. Various groupware tools can be most appropriate for use in enhancing the way an organization conducts its affairs. Today, few organizations question the validity and usefulness of e-mail and scheduling applications. Far fewer organizations, however, have attempted to use document-based groupware in their day-to-day affairs. Think for a moment how useful it would be to pull up a TDY orders template, and since you had already logged into the network, standard data elements such as your name, SSAN, and rank would already be filled in. **A** week later you return, pull up a TDY voucher template, and again, the common data items are filled in automatically. Virtual documents can be forwarded among the individual, the signing authorities, accounting and finance, and travel personnel for far more efficient processing. **A** lot of this functionality is now available with advanced groupware tools.

In 1995, Creative Networks, Inc., published a 92-page study entitled ***Groupware: Myths and Realities***.[13] This report lists four activities which must occur in order for groupware to succeed in an organization:

- The culture of the organization must be such that employees do not feel that they will lose "competitive advantage" by sharing information and participating in work at the group level.
- Management must establish a reward structure that encourages both individual achievement and group work.
- Communication must occur during all phases of a project.

---

[11] ANSI Xl2 is the accredited standards committee, under the auspices of the American National Standards Institute, that oversees EDI standards for the U.S. and Canada.

[12] Messmer, Ellen, "Libraries buy books using EDI over the Web," *Network World,* **11 March 1996, p 37.**

[13] See Appendix K for more information on this report.

- Users must be adequately trained in use of the groupware product(s).

Groupware can dramatically change the way people interact by making communication simpler and faster. Such improved communications can provide very big paybacks in time and cost savings and increased productivity, especially when the primary task of most office workers is the processing and communication of information. Many organizations have found groupware to be indispensable in getting their products completed and promulgated on time. A widely quoted 1994 study of 65 Lotus Notes users conducted by International Data Corporation found an average three-year return on investment (ROI) of 179% with a median ROI of 117%.

Nonetheless, groupware's ability to greatly improve communications can also create problems. Hewlett-Packard's 97,000 employees exchange about 20 million electronic mail messages each month-an average of about 10 messages per person per business day. At Sun Microsystems, the average is 120 messages per person per day. Identifying priorities and not being distracted by less important issues are key to success; otherwise, one can drown in an endless sea of communication.[14]

To counter these concerns, Vargo and Hunt present a number of ways in which groupware can improve team performance:

- More timely decisions can be made due to rapid communication and more readily achieved consensus.
- More appropriate and higher-quality decisions can be made due to better and quicker joint access to needed data and improved opportunities to analyze data in a rapid feedback team effort.
- Group-based decisions will tend to bring levels of commitment and action from the team, yielding higher quality and quantity outputs.
- Thorough and open communication and rapid joint access to current data will enhance the teams' ability to adapt to changes in the competitive environment."

In the most common scenarios, groupware systems are built piece by piece or procured as an integrated system. It has proven extremely difficult to integrate groupware and legacy systems. According to Creative Networks, organizations rarely integrate groupware and legacy systems because:

- Very few integration tools are available.
- The tools that are available are inefficient.
- The architectural models for legacy and client/server-based systems are incompatible."

1.7 Conclusions

The release of the premiere issue of a new bimonthly publication from BCR Enterprises, Inc., entitled ***virtual Workgroups,"*** in March 1996, is further evidence of groupware's momentum.

---

[14] **FitzGerald and Dennis, p 42.**
[15] **Vargo and Hunt, p 287.**
[16] **Creative Networks, p iii.**

According to Jerry Goldstone, publisher and editor-in-chief, the magazine "will cover the full range of applications, technologies, products, services, networks, suppliers, and organization development issues for collaborative work between two or more people. "[18]

All in all, organizations are acquiring groupware functionality because groupware, when integrated properly into the organization's strategic plans, continually pays dividends. These can be in the form of a more positive bottom line or, more abstractly, adding a suite of tools which will make users more effective by collaborating on the day-to-&y and critical tasks at hand. As the world moves further into the information age and looks for better techniques to collaborate and share information, groupware techniques will become more embedded into the corporate culture. The following sections focus on the major groupware categories.

---

[17] **Virtual Workgroups is free in the U.S. and Canada to qualified readers. The Web address for BCR Enterprises, Inc. is: http://www.bcr.com.**

[18] *Goldstone,* **Jerry, "Welcome** *to Virtual Workgroups," Virtual Workgroups,* **March-April 1996, p 2.**

2. Electronic Mail (E-mail)

2.1 Introduction

This section covers e-mail, provides a working definition, discusses its usage in a normal working environment, and focuses heavily on the Defense Message System concept. Electronic messaging is the formal term and connotes a level of authenticity, attribution, assured delivery, and adherence to procedures; these are not always associated with e-mail. Because the term ***e-mail*** is more generic, it will be used vice ***electronic messaging*** in this report.

E-mail is simply an electronic means of sending messages (e.g., notes, memos, and letters) from one person to another or to several others using computers or terminals with network connectivity. A computer program called a mail server receives messages from local users and from remote sites and stores the messages in computerized "mail boxes" assigned to the addressees. The messages stay in a user's mail box until the user "opens" the mail box and reads the mail. Most systems allow the user to store mail (opened and unopened) in the mail box until it is no longer needed. Systems usually include the ability to forward a message, reply to a message, attach one or more files to a message, register a message so that the sender will receive a message telling when the addressee(s) received it, etc.

E-mail systems can be isolated within a LAN or a larger private network or they can be connected to the Internet for world wide communications. When connected to the Internet, it is important that the system comply with the accepted standards to ensure maximum interoperability. At present, the simple mail transport protocol (SMTP) is the ***de facto***[19] standard. Two major ***de jure*** standards gaining widespread momentum are X.400 for message handling systems and X.500 for global directory services. These have been adopted by DoD as requirements for the Defense Messaging System (DMS) which are discussed below.

2.2 Benefits

For those who use e-mail on a regular basis, there is no question that e-mail is a valuable tool for collaboration. This attitude has not always prevailed, however. When local area networks started to penetrate organizations in the late 1980s, the main business reason given was to share physical resources (e.g., printers, modems, disks) and logical resources (e.g., data, files). At that time, e-mail was often considered to be a luxury. This was partly due to the fact that it was next to impossible to associate a dollar value to e-mail usage and implementation. Another factor was resistance to change. After all, organizations had telephones, intercoms, inter-office memos, and meetings when information needed to be disseminated. It was frequently difficult to get e-mail working throughout an organization, let alone across the world. Today, those business paradigms have been broken and electronic messaging, or e-mail, has come of age. It is a major requirement for most office automation

---

[19] *Defacto* **means "from the fact" and refers to a standard which has gained wide acceptance by users, although it has not been adopted by a formal standards body. In contrast, *de jure* means "by law" and refers to a standard which has been adopted by a formal standards body.**

projects and is almost always among the first applications of a groupware suite to be implemented in an organization. E-mail is an essential tool for any organization hoping to migrate toward a paperless environment.

Benefits of e-mail include:

- Better time management technique.
- Enables users to transfer information to more recipients faster than paper products.
- Faster and easier distribution of information to include attachments like spreadsheets.
- Elimination of "telephone tag."
- Easier communication with others who are at remote locations or who have different schedules.
- With DMS, other benefits include robustness, security, authentication, and non-repudiation.

2.3 Background

E-mail was literally the first type of groupware which gained widespread usage. Next to sharing logical (e.g., data files) and physical (e.g., printers) resources, e-mail is the major reason given for networking. According to Electronic Trend Publications, about 85 % of all PCs are expected to be networked in 1996.[20] Electronic Mail and Messaging Systems research shows that by the end of 1995, over 90 million individuals worldwide have e-mail with about 52% of them receiving e-mail via LANs. About 30 million mailboxes are classified as hosts and about 13 million are classified as public.*'

The way that organizations provide electronic messaging to their users has to be reexamined because not only are more people getting connected to e-mail systems, those connected are using e-mail more often. Gary Rowe, a principal at Rapport Communication, a Silver Spring, MD electronic messaging consultancy, states that "corporations need to develop industrial-strength e-mail in the next five to seven years," in order to keep up with the explosion of e-mail usage in-house. Rowe's firm predicts that message volume will grow at least 20% annually through the year 2000. Rowe adds that companies must make a fundamental shift in their e-mail infrastructure, from file-based e-mail platforms to client-server platforms.** This is important because client-server platforms work far more efficiently with large numbers of users as well as enterprise-wide e-mail systems.

Platforms by Lotus (cc:Mail and Notes), Microsoft (Mail and Exchange), and Novell (GroupWise) have the largest market share in the industry. International Data Corporation 1995 estimates are listed in the following table. Note that although Exchange Client shipped as part of Windows '95, Exchange Server didn't ship until April 1996.[23]

---

[20] 'Widespread Connectivity," chart, *Communications Week,* 19 June 1995.
[21] Duval, Brian, "LAN-based E-mail use swells," *InfoWorld, 26* February 1996, p 61.
[22] Horwitt, Elisabeth, 'Make Your Move," *Network World, 22* January 1996, p 44.
[23] Schwartz, Jeffrey, "Lotus Leads in E-Mail Deployment," *Communications Week, 8* January 1996, p 15.

Product Name	Mailboxes	Post Offices/Servers
Microsoft Mail/Exchange	10.5 million	225,000
Novell GroupWise	5.5 million	140,000
Lotus cc:Mail/Notes	11.5 million	400,000

With so many different e-mail packages available plus the migration toward the Defense Message System, it is no wonder that organizations are having difficulty deciding on a particular platform for their enterprise-wide system. Two major companies, Lotus and Microsoft, are promising flexibility in their platforms. Jeffrey Schwartz, ***Communications Week,*** says "Lotus has already surprised some customers by providing connectivity between the Notes 4.0 client and Microsoft Mail 3.x servers. Microsoft recently did the same, adding file replication to the release candidate for its Exchange Server. . . ."[24]

For the Air Force, either Notes 4.0 or Exchange 4.0 will be a good choice (assuming user requirements are clearly specified and the product capabilities are clearly understood) if only because each is on the Loral contract with DISA for Defense Message System @MS) compliance. This compliancy (DMS is discussed below) is imperative to give individuals better guarantees of authenticity, security, and deliverability. Anyone using today's typical e-mail system with any frequency understands that e-mail service, although virtually instantaneous at times, is by no means guaranteed to get to a destination even with the address correctly specified. In today's e-mail environment, e-mail service to a large external population occasionally has a lower completion rate than first-class service by the U.S. Postal Service, using three days as the maximum acceptable rate for snail mail.

Users must know their requirements and the true capabilities of groupware packages being considered, as well as incorporate the functionality within the organization. Notes and Exchange are complex packages with far more functionality than e-mail systems. Once the benefits are understood and a corporate commitment is made, there are many positive reasons to go with a groupware product for an enterprise-wide collaborative strategy.

2.4 Criteria for Selecting E-mail Software

DMS compliance is now the primary DoD criterion for selecting e-mail software. Many other features are important to the typical e-mail user as well. The ***Government Computer News*** regularly conducts product preference surveys which include a listing of features and qualities users are interested in as they evaluate products. In March 1996, ***Government Computer News*** published the results of its survey of e-mail software and the following list of features and qualities is presented in order of importance as determined by 321 participants.[25]

- Reliability.
- Ease of use.

[24] Schwartz, 8 January 1996, p 15.
[25] Silver, Judith, "Stamps of approval go to Novell, Banyan," *Government Computer* News. 4 March 1996, p 16.

- Integration with other network applications.
- [illegible]
- Ease of administration.
- Adherence to standards.
- Availability of gateways.
- Ease of installation.
- Directory synchronization .
- ***x.400* support.**
- Fax integration.

From the survey, five items stood out which participants felt needed improvement.[26]

- Slow directory synchronization
- Poor file management.
- Fair integration with network applications.
- Limited availability of gateways.
- Slow transmission.

2.5 Connectivity Paradigms

A major issue which network managers must confront is choosing between messaging systems based on proprietary protocols and Internet-oriented systems using the Simple Mail Transport Protocol (SMTP). Examples of proprietary systems include Novell GroupWise and Microsoft Exchange. At present, many analysts don't expect robust SMTP solutions to be viable for large corporations for at least two years.

Jeffrey Schwartz, ***Communications Week,*** says that "E-mail administrators looking to update their systems soon are likely to go with the proprietary systems offered by the likes of Lotus, Microsoft, and Novell. Those systems are more secure and incorporate more features, such as scheduling and document management, than SMTP platforms."[27] Schwartz adds that "E-mail systems that use native SMTP backbones—from. ConnectSoft, Qualcomm, Inc., and Netscape Communications Corporation, for example-will give organizations the freedom to mix and match different clients and servers as the need arises. Proponents of this approach also argue that SMTP-based e-mail systems linked to the Internet are streamlined compared to proprietary systems."[28]

All proprietary systems require gateways. Einar Stefferud, president of Network Management Associates, Inc., Huntington Beach, CA, says, "Gateways perform translations between different messaging formats, and since they are in effect different languages, they necessarily lose some information in the translation." Bottom line: gateways are bottlenecks because each message has to be opened and translated.[29]

---

[26] **Silver, p 16.**
[27] **Schwartz, Jeffrey, "E-Mail via the Internet,"** *Communications Week, 26* **February 1996, p 9.**
[28] **Schwartz, 26 February 1996, p 9.**
[29] **Schwartz, 26 February 1996, p 9.**

2.6 Use of GroupWise within the Air Force C4 Agency (AFC4A)

In December 1995, AFC4A transitioned from the DaVinci e-mail product to Novell's GroupWise. The principle reason for switching was to provide better messaging service among the various organizations and agencies on base and because of Scott AFB's migration to Novell NetWare 4.1. HQ AMC to TRANSCOM messages often took hours to deliver on Scott AFB. The messaging problem was further highlighted when various executive-rank individuals had occasional difficulty sending and receiving routine e-mail to other units on Scott AFB.

Novell's GroupWise was selected as the product to meet the base's major requirements. One of these requirements was the ability to serve 10,000 users on base. Another was a goal to reduce the number of servers in the network. Although AFC4A was not necessarily having the problems that the rest of the base was having, it and other tenant organizations elected to switch to GroupWise to better ensure compatibility across the base.

The lower cost for AFC4A to convert to GroupWise ($24,000 for GroupWise including a 1000-user license and maintenance agreement vs. $101,000 for Microsoft Mail not including a maintenance agreement) was a major consideration as well.[30] In addition, Microsoft contacts stated that no more than 350 users could be supported per server. Thus, if the base migrated toward Microsoft Mail vice GroupWise, Scott AFB would have needed perhaps another 10 e-mail servers. Because the base had already migrated to Novell NetWare 4.1, which provides tight integration with GroupWise, these were not needed. Regardless, another migration will take place once the switch to DMS begins.

The GroupWise design has an excellent integration of scheduling and calendaring with e-mail that greatly enhanced the AFC4A's groupware capability as more individuals began using these features. However, several start-up problems occurred as AFC4A transitioned to GroupWise. E-mail database corruption messages and duplicate user addresses were frequent but gradually diminished within the first two months as the configuration stabilized. As expected, many users accustomed to particular features in DaVinci were somewhat disappointed because it wasn't always intuitively obvious how to do the same tasks in GroupWise. Change is always an issue!

Unforeseen problems resulted when several organizational (local) mail systems were merged into a single base-wide (metropolitan or campus) system. The principle problem which occurred with the basewide merge was duplicate user IDs. For example, if two individuals with the user ID of "smithj" were on base, even though they were in different subdomains or post offices, their IDs conflicted and e-mail from outside their local post office would not be delivered. Apparently, GroupWise does not look at the "post office name" following the at-sign (@) in the Internet address. E-mail coming onto the base from the Internet addressed to a conflicted user ID was simply dropped and was unrecoverable. The temporary solution was to change at least one of the duplicate user IDs to eliminate the conflict.

---

[30] Licensing fees were about $10 per user for those switching to GroupWise and about $35 for those switching to Microsoft Mail.

The problem could have been averted by de-conflicting the user IDs prior to the merge. However, network administrators had understood that duplicate user IDs would not conflict if the users were served by different GroupWise post offices. Four months after the merge, the on-line GroupWise address book still had some duplication of addresses and therefore conflicting user IDs. System administrators state that the system is stabilizing and the "growing pains" are beginning to ease as conflicts are resolved and as users become familiar with the system. LAN administration personnel have been very helpful by posting GroupWise tips on a home page on the AFC4A's intranet (http://infosphere.safb.af.mil/~syneo/gwise).

The AFC4A is currently documenting its business practices accomplished via LAN resources. A team is developing procedures for setting up GroupWise appointments, e-mail use, electronic coordination, home page management, and task management.[31] This activity is a major step toward ensuring the Agency takes advantage of capabilities of GroupWise, its intranet, and other LAN assets to better serve its collaboration efforts.

Business practices can be applied to any groupware product, but the procedures themselves will need to be modified to accommodate differing applications. These procedures have also been written to guide the individual through the steps required to perform the task using a specific application. Most applications are likely to have differences in their look and feel.

AFC4A procedures are being developed based on the best business practices combined with the capabilities and limitations of its standard applications. Understanding and refining business processes will help AFC4A better define its requirements when selecting future applications.[32]

2.7 Defense Message System @MS)

DMS is a Secretary of Defense-directed program to implement a DoD-wide electronic messaging solution using commercial applications. Simply stated, the goal of DMS is to replace DoD's current messaging solution, based on teletypewriter technology, with modem technology using the Internet as the backbone. DMS will provide a fully integrated, supportable, secure, and accountable capability for individual and organizational messaging for DoD. DMS compliance for Air Force systems is mandatory and paramount in importance.

The DMS system consists essentially of three main components: a message handling system, directory service system, and a management system.[33] DMS includes all the hardware, software, procedures, personnel, and facilities required for electronic delivery of messages

---

[31] Bower, 2d Lt Albert, HQ AF C4 Agency, 'Bullet Background Paper on LAN Agency Business Practices," 26 March 1996.
[32] Nicely, Lt Col Debra J., HQ AF C4 Agency, interviewed by Maj d c Brashares, 26 April 1996.
[33] "Defense Message System: Global Solutions for Secure Messaging, Answers to Common Questions," DMS/AF PMO, MAFB-Gunter Annex, http://w3.af.mil/DMS/quest/faq.html, 20 November 1995.

among organizations and individuals in the DoD and includes the full interoperability of tactically deployed users and interfaces with Allied systems.[34]

The DMS will provide message service to all DoD users, including deployed tactical users, access to and from worldwide DoD locations, and interface to other US government, allied, and Defense contractor users as needed. To minimize delay, this service will be direct to the end user whenever possible. The DMS will reliably handle information of all classification levels (unclassified to TOP SECRET), compartments, and handling instructions. In addition to maintaining high reliability and availability, the DMS must interoperate with current message systems as it evolves from the current configuration to full implementation.

The DMS will be the platform for planned growth and new capabilities that do not exist today. It will be based upon the principles of standardization and interoperability, while preserving adaptability to implement Service and agency unique functions. The major elements of the current collection of subsystems upon which the DMS will be built include the Automatic Digital Network (AUTODIN) system (including tactical and base-level support systems) and the electronic mail systems on the DoD Internet (principally within the Defense Information Systems Network (DISN) and associated local area networks (LANs)).

At a minimum, an AUTODIN-equivalent operational capability for DMS is scheduled to be fielded by the year 2000 to coincide with the final demise of AUTODIN. AUTODIN is the aged messaging network that costs DoD hundreds of millions of dollars a year to maintain. AUTODIN is now scheduled for shutdown no later than 31 December 1999; one of the benefits from this change is to help avoid systems software problems when computers try to interpret "00" in the year 2000.

With all the exposure given the Internet over the past few years, many wonder why DoD should implement DMS vice using the Internet. According to Major General David Kelly, DISA Deputy Director, the Internet cannot provide the secure, accountable, and reliable messaging that DMS is designed to provide.[35] However, the DMS will use the technology on which the Internet is based. See Appendix D for a listing of DMS management, technical, and tactical requirements.

Interoperability and security concerns are among the major reasons for migrating to DMS. Fiscal reasons are at least as important. According to Paul Grant (ASD(C3I)) and Anne M. Tall (Booz-Allen & Hamilton, Inc.),

> Budget concerns are pushing the acceleration of the phase-out of AUTODIN to avoid costs. All federal departments and agencies currently using AUTODIN will need to address how they will continue to provide or receive similar service when AUTODIN is gone. This is an incentive to seriously consider transitioning their existing

---

[34] 'Defense Message System (DMS): More About DMS," http://www.itsi.disa.mil/dms/dms.html, 17 October 1995.

[35] Masud, Sam, "DMS email gets set to go global," *Government Computer News,* 13 November 1995. p 35.

> AUTODIN capability to the DMS. When considering this, they will find that the DMS can also be used to provide business-quality messaging needed in many other government activities. These departments/agencies will eventually make the decision either to adopt DMS, fund new development for a DMS-equivalent, or seek proprietary solutions for their business-quality messaging. Each option compels consideration of cost and interoperability as well as the impact on the internal users and external customers and partners.[36]

Since 1988, the Assistant Secretary of Defense (ASD) for Command, Control, Communications, and Intelligence (C3I) has championed DMS as the single electronic messaging capability for DoD. Not only does this support complement the goals of the National Performance Review, but DMS is a critical value-added service of the Defense Information Infrastructure.[37] In a 9 March 1995 memorandum from the Deputy ASD(C3I), Mr Emmett Paige, Jr. states that the DMS will be implemented in all military environments and will be based on international standards wherever possible to avoid unique military specifications. He adds, "All electronic messaging (AUTODIN and legacy electronic mail) within the DoD must migrate to DMS-compliant messaging as rapidly as possible. This includes messaging capabilities integrated into larger systems or applications."[38] Mr Paige follows with a strong moratorium: 'To ensure optimal use of dwindling defense resources, EFFECTIVE IMMEDIATELY, a moratorium is imposed on the acquisition of non-compliant electronic messaging components unless a transition path to full compliance can be documented."[39]

From the DoD perspective, it is also important to understand the two perspectives of how government-wide message working groups and the role of the DMS Program are intertwined. Paul Grant and Anne M. Tall state:

> First, the DMS has a basic requirement to interoperate with partners in other government agencies and industry, and second, these partners also need business-quality messaging. Many of the DMS initiatives are serving as examples for large-scale interoperable electronic mail initiatives that can be used for business-quality, secure messaging in the government (federal, state, local, and tribal), commercial, and private sectors.[40]

In October 1995, DMS Program officials announced 18 sites[41] for the roll out of the initial DMS e-mail products. According to Lieutenant Colonel George B. Meyrick, DMS

---

[36] Grant, Paul (ASD(C3I)) and Anne M. Tall (Booz-Allen & Hamilton, Inc.), "Department of Defense E-Mail Policy and Government-Wide E-Mail Initiatives," http://www.itsi.disa.mil/dms/pgrant.html, 10 August 1995.
[37] Grant & Tall.
[38] Paige, Emmett, Jr., "Electronic Messaging Policy - Implementation Guidance, " Memorandum for Secretaries of the Military Departments, Under Secretaries of Defense, Assistant Secretaries of Defense, Directors of the Defense Agencies, and Director, Joint Staff, 9 March 1995.
39 Paige.
[40] Grant & Tall.
[41] There are now more than 18 sites. See Appendix E for a listing.

implementation manager, about half are user sites for initial operational test and evaluation (IOT&E) and the rest are support locations.[42] It is imperative to verify compliancy through an independent source.

The primary requirements for DMS applications are GOSIP compliance for portability, X.400 compliance for mail service, and X.500 compliance for global directory services. Testing for DMS compliance is done at three levels as follows:

- Level 1: Basic GOSIP, X.400, and X.500 compliancy.
- Level 2: Level 1 plus specific DMS requirements for military operation.
- Level 3: Full interoperability testing.

Testing for level 1 is performed at the NIST or other authorized facilities and is usually funded by the developer. Level 2 and level 3 tests are conducted by DISA's Joint Interoperability Test Center (JITC) at Ft Huachuca, AZ. Full compliance testing is limited by available funding and schedules.

A demonstration of pre-beta versions of DMS software was conducted by Loral Federal Systems Group, Manassas, VA, during DoD's Joint Warrior Interoperability Demonstration '95 in September 1995. Loral is the owner of a $500 million contract to develop a global system based on the Open Systems Interconnection seven-layer model's X.400 message handling systems and X.500 directory services standards. The company presents current DMS information at http://www.dms.loral.com.[43] This home page has extensive links to other DMS home pages throughout DoD.

The Loral DMS home page has links to many other DMS-related home pages. One home page of interest to AF personnel is: http://w3.af.mil/DMS/. This home page, provided by DMS/AF Program Management Office at Maxwell AFB-Gunter Annex, features answers to common questions including:

- Schedules and availability.
- Interoperability.
- What sites should do now.

Another informative home page, http://www.itsi.disa.mil/dmshome.html, is the DISA DMS Home Page. This page includes a list of the program managers for the various services, an overview of DMS, DMS policies, news about DMS, and electronic copies of various DMS documents.

JITC officials estimate that a minimum of four to six weeks will be required for standard architecture conformance testing, nine weeks for interoperability testing, and eight weeks for functionality, security and performance testing. Only three client[44] user agents are on the

---

[42] Masud, 13 *November* 1995, p 35.
[43] Masud, 13 November 1995, p 35.
[44] In a client/server environment, clients are typically user machines (e.g., microcomputers, terminals, workstations) which receive services (e.g., file, database, network, facsimile, printer) from a server machine.

contract and in testing: Microsoft Exchange 4.0, Lotus Notes 4.0, and ESL. At present, operational testing is expected to begin in late Summer 1996. Novell expects to have a DMS version of GroupWise 4.1 available late in Summer 1996.

The ESL product provides DOS, Windows, and UNIX clients and is able to directly send messages via a message transfer agent (MTA) without an intermediate message store (MS). The other two products, Microsoft Exchange and Lotus Notes, consist of separate client and server software systems. Both provide basic messaging and advanced groupware clients. Microsoft Exchange server contains an MS and MTA bound together. The Lotus server acts as the MS but requires separate MTA software to operate in the DMS environment. Both the Microsoft and Lotus products require an intermediate, proprietary message store (MS) as an interface to the message-transfer agent (MTA).

One area of concern with DMS is the impact of security procedures on users who send primarily unclassified messages over commercial e-mail systems. Paul Constance, a staff writer with ***Govemment Computer News,*** states, "At issue is the time computers will take to complete various compulsory DMS security functions. These include a log-on routine, in which a DMS-compliant application verifies the validity of a user's Fortezza card and prompts for a PIN number, and the processing required to check digital signatures and decrypt incoming messages and files."[45]

Numerous observers of Fortezza demonstrations say that signature verification and file decryption process can take 10 seconds for a regular-sized message and considerably longer for lengthy messages with attachments. Also, adds Constance, "DMS users will be logged off automatically after a few minutes of inactivity to ensure that an unauthorized user does not operate a secure terminal with a logged-on Fortezza card. Depending on message traffic, some users will have to repeat the log-on process dozens of times daily to send or receive messages."[46]

The real problem is that about 90% of all message traffic is made up of routine messages. No matter how trivial the message, it will require as many steps to send and receive as an official, classified memorandum. This seems to be an unnecessary burden to those who view the spontaneity of e-mail as being one of its most useful benefits. This is the classic conflict between security and convenience. DISA is considering security changes that would allow some flexibility in Fortezza's application.[47]

2.8 Conclusions

E-mail is the cornerstone within the corporate groupware concept. E-mail allows individuals to stay in touch practically throughout the world and it is replacing many types of formal and non-formal types of correspondence paperwork. Today, few organizations do a cost-benefit

---

[45] Constance, Paul, "DMS is facing revolt by its intended users," *Government Computer News,* 15 April 1996, pp 1, 52.

[46] Constance, 15 April 1996, p 52.

[47] Constance, 15 April 1996, p 52.

analysis of e-mail-it is considered an essential tool, just like the telephone. With the popularity of groupware suites such as Novell's GroupWise and Lotus Notes, many are seeing the desirability of viewing e-mail as merely one important component of a groupware suite. Therefore, organizations desire the ability to integrate e-mail with scheduling and calendaring as well as document databases.

The DMS concept will replace AUTODIN and a variety of e-mail platforms with those that provide robustness, security, authentication, and non-repudiation. There is concern that current DMS security procedures will prove cumbersome to users who send primarily unclassified messages over commercial e-mail systems. Log-on procedures, signature verification, and file decryption can add a significant amount of time to the process of using a messaging system. DMS advocates maintain that DMS' universal security and authentication will outweigh any inconveniences. Although DMS will ensure interoperability among compliant e-mail packages, other groupware functionality is not within its purview. For those desiring to integrate additional groupware capabilities across their enterprise, interoperability testing is a must.

THIS PAGE INTENTIONALLY LEFT BLANK

3. Calendar/Scheduling

3.1 Introduction

After e-mail, calendaring/scheduling (subsequently referred to as scheduling) is the most popular type of groupware application to implement. All of the major office automation suites, such as Microsoft Office and Novell GroupWise, offer this application. These scheduling products are far more than personal information managers; in addition to scheduling events and facilities, they include such functionality as keeping track of appointments, meetings, and to-do lists.

Scheduling products are particularly valuable when they can be used across the enterprise. Joel Snyder, senior analyst for Opus One (Tucson, AZ), states that an enterprise scheduler is only useful when it supports everyone in the enterprise. He adds:

> The most obvious difference between Workgroup and enterprise scheduling systems is in performance and scalability. To handle very large groups, most enterprise scheduling packages use a true client/server architecture and timesharing servers, mostly running on UNIX and Windows NT.[48]

The major impediment to widespread use has been the need to consolidate on one application, as there are no standards for the interchange of scheduled events and other information. Several sets of standards have been proposed by industry groups, but there has been very little market movement to embrace them. Referencing interoperability among various scheduling packages, Snyder states that "The vendors don't seem to care much about this problem, since there is little if any effort to standardize on a single protocol which might allow two different systems to interoperate."[49]

Some scheduling packages are able to scale up to a 50,000-user organization. However, it would be rather unusual for a large organization to use a single scheduling program across the entire enterprise for the same reasons that workgroups within the organization would not necessarily be running the same applications. Scheduling is seen more as a Workgroup or horizontal application vice a vertical application; e.g., an airman would not typically make appointments on a general's calendar. Broader lattitude may be given to checking schedules.

Much of the increased bandwidth needed for e-mail today is attributed to linking such applications as calendaring, scheduling, and electronic-forms routing to e-mail. The new generation of client/server-based messaging systems is well suited to handle this change in paradigm.[50]

---

[48] Snyder, Joel, "The Dating Game," *Network World Collaboration* supplement, March/April 1996, p 21.
[49] Snyder, March/April 1996, p 23.
[50] Schwartz, Jeffrey, "GM Taps Notes 4 for E-Mail & Groupware," *Communications Week, 26* February 1996, p 9.

3.2 Benefits

The use of scheduling programs has resulted in a savings of time in terms of more efficient use of meeting rooms and the time required to set up meetings. Group scheduling applications are time-management systems for workgroups that facilitate the creation and tracking of personal schedules, including appointments, meeting notes, and to-do lists by multiple members of a Workgroup. These applications also allow for the creation, editing, and viewing of events for others in the Workgroup. Most of these applications also have the capability of e-mail reminders for scheduled appointments. In addition, schedulers can determine who is not available for meetings and can also be used to keep meeting agendas.

Coordinating schedules is the collaborative application most in demand. Two products handle this out of the box. Exchange includes Schedule+; GroupWise includes a built-in, full-featured application. Notes 4.0 integrates with Lotus Organizer to provide scheduling capabilities.

Scheduling can even be managed during "disconnected" operations. An individual can take a snapshot of his/her schedule from the office platform, travel, and upon reaching the destination, resynchronize the schedules via a telephone line back to the home office. There are even products to help personal digital assistant users to link their schedules to the corporate network.

3.3 Air Force Usage and the DMS-compliance Issue

In the Air Force, scheduling practices are used on individual bases and for some interoffice or intracommand functions, but it is not used Air Force-wide because no standard has been established. Various organizations are contemplating this problem. If organization-wide scheduling is a requirement, definitely verify any vendor claims and keep abreast of ongoing developments. DMS-compliance covers messaging, not such capabilities as scheduling, calendaring, and interacting with documents across Workgroup boundaries.

While products like GroupWise, Notes, and Exchange pass scheduling and file replication information amongst their respective servers, it is done in a proprietary fashion. What transfers between one base's message transfer agent and another's is X.400 (message handling system) type information, not hooks to reach into someone else's scheduling program. Thus, someone at the Air Staff using Notes cannot easily schedule a meeting with the Air Force C4 Agency personnel even if both users are using Notes. Unless the DMS concept is expanded to cover more than messaging, the use of calendaring, scheduling, and file replication will be confined predominantly within workgroups.

3.4 Selecting an Enterprise Scheduling Product

The following list from Joel Snyder covers pertinent questions to consider when selecting an enterprise scheduling/calendaring product:[51]

- Does it support true client/server operation and multiple servers?

[51] Snyder, Joel, March/April 1996, p 21.

- How are remote calendars updated: in real-time or using a store-and-forward technology such as e-mail? Which is the most appropriate for your organization?
- Does it support the desktop and minicomputer platforms your organization uses? Will it meet the needs of your remote users?
- Can you use your existing network protocols and mail system, or does it require adoption of something special?
- Will all users have to be fluent in English to take advantage of the system?
- Does it have a well thought out GUI? Will it require costly training?
- Do you get the additional features that you need, such as project management or an in/out box?

Another question to consider is:

- Are users already used to a particular application? Can you reduce training time by using a product people already know how to use?

3.5 Selected Enterprise-wide Scheduling Products

- CaLANder—MSI.
- Calendar Manager-Russell Information Sciences, Inc. (Laguna Hills, CA).
- CorporateTime-Corporate Software & Technologies International, Inc. (Montreal, PQ).
- Intellilink-Intellilink Corp. (Nashua, NH).
- Synchronize-Crosswind Technologies, Inc. (Santa Cruz, CA).
- Synchronize-Now Software, Inc. (Portland, OR).

THIS PAGE INTENTIONALLY LEFT BLANK

4. Document-based Groupware

4.1 Introduction

Document-based groupware is a major step forward in functionality compared to electronic messaging. Document database products are designed to store and manage large collections of text and graphics, collaborate on documents, and share information across networks. Inherently, they can be somewhat difficult to use, but once users understand the underlying concept of document-based groupware, the payoff can be enormous.

The application that epitomizes groupware is Lotus Notes which has been installed on millions of platforms since its initial release in 1989. In fact, the evolution of Notes has paralleled the evolution of the term groupware. If the virtually unanimous acclaim for Notes 4.0, formally introduced at *Lotusphere* in January 1996, is any indication, Lotus continues to refine and expand the groupware concept.

Despite these glowing reviews, there are some who believe the World-Wide Web will eventually kill document-based groupware. Jeffrey Held, a partner at Ernst & Young's Network Strategies Practice, Vienna, VA, counters by saying, "The Web is a good tool for publishing information and distributing documents, but if that was all an organization was using Notes for, they wouldn't be getting their money's worth."[52] Section 7 (Intranet: Private Web Servers) includes a comparison of document-based groupware and intranet usage.

4.2 Benefits

Widely published figures from International Data Corporation, based on surveys of 65 Lotus Notes sites, state that the three-year average return on investment (ROI) is a phenomenal 179% with a median payback period of just over two years.[53] Jeff Held, a partner with the Technology Services Practice of Ernst & Young LLP, takes these figures to task. He counters with, "Because groupware is typically not focused on a specific application or process, I have found it very difficult to perform an ROI analysis that is credible. In fact, most ROI analyses of groupware that I have seen have looked pretty shaky and would probably do more harm than good."[54]

Regardless of which side one leans toward, many organizations swear by their groupware products and are absolutely convinced that groupware provides real, measurable benefits, let alone all the potential subjective benefits. Estimates of the number of Notes users are approaching five million. With this many users of a single groupware product, there must be some measurable benefits. In comparison, Ian Campbell of International Data Corporation forecasts Microsoft Exchange will exceed five million clients by the end of 1996. At first

---

[52] **Schwartz, Jeffrey, 'GM Taps Notes 4 for E-Mail & Groupware,"** *Communications Week, 8* **January 1996, p 73.**

[53] **Adhikari, Richard, "Users' Votes** *Go* **to** *Notes," Client/Server* ***Computing*****, January 1995, p 50.**

[54] **Held, Jeff, "Groupware as Infrastructure,"** *Network World Collaboration* **supplement, November/December 1995,** p *26.*

glance, this appears to be a spectacular increase in the use of Exchange. The major reason for this growth, according to Ian Campbell, is that about half of those using Microsoft Mail are expected to convert to Exchange this year.

In addition to a potentially large ROI, other benefits include?

- Improved productivity.
- Improved project management.
- Better time-to-market for information.
- Better support of remote and mobile uses.

4.3 General Comments on Lotus Notes 4.0

The initial set of reviews concerning Notes 4.0 has been, for the most part, extremely favorable. Innovations such as replicating only changed fields, and improvements in server capacity have garnered universally high marks. Stephanie Stahl, ***Information Week,*** says that Notes 4.0 is "much more than an incremental upgrade. It includes dramatic improvements in scalability, ease of use, programmability, Internet access, management, and more."[56] Jeffrey Symoens, who tested Notes 4.0 extensively across various clients and servers for ***Federal Computer Week,*** opens his recent article with a strong endorsement for Notes 4.0:

> The bottom line for government buyers interested in groupware applications is this: Lotus Notes 4.0 is the way to go. No other groupware package comes close to offering what Notes has been delivering for the last 12 years. With its new release, Lotus Development Corporation propels Notes even further out in front of the competition. Whether your agency has already deployed Notes or is planning a move to the platform, you'll be satisfied with Release 4.0. The long-anticipated upgrade includes numerous improvements over a product that already stood in a class by itself."

On the down side, many perceive the application as somewhat slow. Steven J. Vaughan-Nichols, who ***tested*** Notes ***4.0*** for ***Government Computer News,*** states:

> This could be the first Windows program ever to require a Pentium processor. Notes 4.0 dragged a 33-MHz 486DX with 16M RAM to its knees. Normal operations, like changing a single field on the settings, took a second or two to run. . . . A 100-MHz Pentium Windows machine sped things up considerably. If your office will commit to groupware on Pentiums, Sparcstation 20s, PowerPCs, or the like, Notes 4.0 will be worth the trouble. If you're stuck with the last generation of hardware, don't invest now.[58]

---

[55] Creative Networks, pp 6-7, 6-8.

[56] Stahl, Stephanie, "Sharing the Workload," *InformationWeek*, 1 January 1996, p 18.

[57] Symoens, Jeffrey, "Notes *4.0," Federal Computer Week - Government* ***Best Buys*** supplement, 8 January 1996, p s12.

[58] Vaughan-Nichols, Steven J., 'Lotus Notes 4 is like a daisy-now you love it, now you don't," *Government Computer News, 8* January 1996, p 51.

Notes is not good with reporting functions because it does not offer relational database functionality. Users can send data, but they cannot manipulate it. Notes' strong point is managing unstructured information such as text files. Because Notes does not use a procedural language, developers cannot design commands with loops in them. Also, because a Notes database is not relational, users must rethink their corporate workflow in order to maximize their use of the product. Finally, especially for new Notes users, don't expect to load Notes and become productive right away; the large set of documentation that comes with Notes is an indication of its complexity.

That said, there are certain applications that are highly suited for Notes. These applications include those that use large textual databases requiring key word searching and those that use "thought-managed" databases, where users need to either know the status of a particular order or where a document is in the approval chain, or where many people have to collaborate on a document or project, or respond to different ideas. In addition, running on multiprocessor platforms, Notes 4.0 can support at least 1,000 users per server vice 120 users in Notes 3. Although this can greatly ease administrative and troubleshooting chores, 1,000 users on one server dictates servers with multiple processors. Appropriate servers to handle 1,000 clients could easily exceed $50,000 in cost-certainly not desktop PCs. A 200-user community is far more appropriate and can be served with a Pentium-class machine without extraordinary amounts of memory.[59]

Cost is another attractive feature of Notes 4.0. The license for Notes Desktop costs about $69, about half of what Notes 3 costs. The full developer's package runs about $275 and the server prices vary from $495 for a single-processor version to $2,295 for a multiprocessor version.

The $69 price is so attractive that many users who were uncomfortable choosing between the intranet and Notes can have both. Notes 4.0 includes InterNotes Web Publisher 2.0, an automatic Hypertext Markup Language (HTML) authoring system which converts Notes documents into fully built Web pages. This system also supports HTML forms to accept input from Web users. Although Notes 4.0 has no built-in Web browser per se, the program can embed Web Universal Resource Locators (URLs) in any notes document. According to Tony Pompili, PC *Magazine*, just "double-click on a URL and Notes will automatically connect the user to that Web page. The page looks like a Notes document, but below the surface, it's actually a Web page."[60]

Other features of Notes 4.0 include:[61]

- A new graphical user interface that uses a three-pane window and folders made popular by Macintosh and now Windows 95. The new GUI has been widely praised by existing Notes users and appears to greatly simplify learning Notes for new users.

---

[59] Pinkston, Lt Col Michael G., Chief, AFC4A/Network Strategy Office, interviewed by Maj d c Brashares and Mr John Root, HQ AFC4A/Technology Insertion Office, Scott AFB, IL, 2 February 1996.
[60] Pompili, Tony, 'Notes 4 Goes from Ugly Duckling *to Swan." PC Magazine,* 21 March 1996, p 41.
[61] Pescatore, John, IDC Government, interviewed by Maj d c Brashares (HQ AFC4A/TNAA), 4 March 1996.

- Components-Much like plug-ins for **Netscape** and OLE-objects for Microsoft products, Notes 4.0 has extended the use of small footprint applications that can be embedded in Notes documents. Components can be small spreadsheet, graphic, or Internet-enabled applications that use OLE Custom Control (OCX) features.
- Integrated calendaring-IBM/Lotus integrated the calendaring capabilities of Lotus **Organizer** into Notes 4.0. It will interoperate with the standalone version of Organizer, and IBM's Office Vision products.

Notes recently suffered a setback when AT&T announced in February 1996 that it was discontinuing AT&T Network Notes after millions in investment. The service was meant to deploy Notes servers throughout the AT&T public networks and support dial-in and dedicated access from both **LANs** and workstations. AT&T, which will now focus on Internet solutions, stated that one of its concerns was the proprietary nature of Notes. Other network providers, such as CompuServe and **WorldCom,** Inc., continue to provide public Notes services. One concern comes from the international community as 12 international carriers are building Notes networks and ***were*** planning a global network of Notes networks with AT&T as the U.S. **link.**[62]

IBM announced that its public Notes service, offered over the IBM Global Network, would become commercially available in 1996. IBM will deploy Notes servers within IBM's network connecting more than 850 cities worldwide. IBM is working with application vendors and content providers to post data and applications on the network. Public carriers, such as IBM Global Network, make it possible to offer groupware applications without the customers having to develop the network infrastructure themselves.

For those with access to CompuServe, Notes technical support can be found in:

- The Burton Group News Analysis.
- ***The*** View, a Notes software technical journal.
- The ***Vendor Services Guide*** to Notes-oriented services and **products.**[63]

4.4 Corporate Usage of Lotus Notes

General Motors Corporation (GM), the world's largest user of Notes 3 with about 100,000 users, is one of many companies excited about Notes 4.0. Recently, GM announced it will upgrade to Release 4 for its worldwide messaging backbone. According to Jeffrey Schwartz of ***Communications*** Week, **"(GM)** also plans to use Notes to provide a platform for collaborative computing and, ultimately, electronic commerce. . . ."[64]

GM will, however, leverage Web technology built into Notes 4.0. Don Hedeen, director of information delivery and deployment at GM, is a staunch supporter and says Notes 4.0 is a far more secure, scalable platform than software that specifically relies on the Internet. Hedeen adds that GM has mandated that Notes be used throughout the corporation. Of added

---

[62] **Wexler, Joanie, "Network Notes is dead,"** *Network World.* **4 March 1996, pp 1.69.**
[63] **"News Briefs,"** *Network World,* **8 January 1996,p 6.**
[64] **Schwartz, 8 January 1996, p 1.**

significance is that Notes will be the only e-mail system at GM to include subsidiaries Hughes Aircraft Company and Electronic Data Systems Corporation, replacing 20 disparate messaging systems.

Another benefit for large-scale users like GM is scalability. While Lotus' cc:Mail may be fine for most small and mid-sized companies, it is not necessarily good as an enterprise e-mail solution. Eric Brown, an analyst at For-rester Research, Inc., Cambridge, MA, states that "In order to use cc:Mail for 100,000 users, you would need about 1,000 post offices or servers."[65] With Notes 4.0, servers can handle up to 1,000 users each vice perhaps 100 for cc:Mail. This translates into significant cost savings, less downtime, fewer maintenance problems, quicker response time, and a far smaller problem with bottlenecks.

The CIA is another long-time, large user of Lotus Notes. William Eisner, CIA deputy chief for systems development, said Notes 3 helped redefine the way the agency collects and distributes information, no small feat given that is the CIA's main task. Adam Gaffin, *Network World,* says the CIA relishes Notes' strong security and flexible data access capabilities. In addition, Notes handles 85% of the CIA's e-mail traffic.[66]

For the standard reason of "resistance to change," it took a while for many of the users within the CIA to accept Notes. The transition began in 1990. One way Eisner's staff began accepting Notes was to create a Notes version of their widely used CIA almanac known as the *World Factbook.*

Eisner stated three major keys for the CIA's successful incorporation of Notes?'

- Removing the Notes user directory from client workstation.
- Keeping a record of who looks at every Notes document.
- Use the North American version of Notes even in overseas offices because it has better public-key security.

As can be guessed, the CIA has a great interest in security which is the major reason they selected Notes. The CIA added an auditing trail to maintain a log of every document as well as everybody who accesses it and when. Although this does slow performance somewhat, Eisner says it's vital to provide a documentation trail to ensure that nobody is amassing document for potentially treasonous reasons.[68]

4.5 General Comments on Microsoft Exchange

Microsoft's long-awaited entry into the high-end corporate groupware environment unfolded with its Microsoft Exchange product. The initial release is denoted as Microsoft Exchange 4.0. Exchange Server integrates e-mail, group scheduling, electronic forms, and groupware applications on a single platform that can be managed with a centralized, easy-to-use

---

[65] Schwartz, 8 January 1996, p *73.*
[66] Gaffin, Adam, 'CIA espies value in turning to Lotus Notes." *Network World,* 13 March 1995, p 43.
[67] Gaffin, p 43.
[68] Gaffin, p 43.

administration program. It is designed to make messaging easier, more reliable, and more scalable for businesses of all sizes.[69]

Matt Kramer, PC *Week,* says the product is shaping up as a powerful client/server messaging system but provides only the basics of groupware. He adds that Exchange is far less ambitious than Lotus Notes and more closely competes with Novell Inc.'s GroupWise and Lotus' cc:Mail. Exchanges' tight integration with Windows NT allows it to be easier to manage than GroupWise and cc:Mail, although Exchange lacks the cross-platform support found in GroupWise. Kramer adds that the Exchange's client/server combination is expected to replace the Exchange client already in Windows 95.[70]

The new Exchange version will initially address the shortcomings of Microsoft Mail and provide the major infrastructure elements of an enterprise messaging system that will be the underpinnings for groupware and collaborative computing initiatives. Microsoft's vast lead in software suites, combined with the inclusion of Exchange clients in Windows 95, provide a powerful pull for Exchange.

John Pescatore of International Data Corporation believes that Exchange will steal new desktops from Notes and GroupWise, but that the collaborative capabilities of the initial release fall far short of Notes' capabilities. Many organizations are likely to take the easy way out and add to Microsoft's choke-hold on their computing infrastructure, reaping near term savings at the cost of long term dependencies."

The Bosnian mission is giving the Army an opportunity to test the beta version of Exchange's e-mail capability. U.S. troops in Hungary are beta testing the product, and the e-mail package soon will be installed for the forces in Bosnia. Unclassified messages are being sent between Taszar, Hungary and Heidelberg, Germany where a second Exchange server is installed. An Internet mail connection in Exchange lets users communicate globally via the simple mail transport protocol (SMTP).[72]

Exchange promises to better use the bandwidth e-mail requires. Garth Keesler, a staff consultant at Integraph Corporation, a Huntsville, AL supplier of desktop-computer components and software, says that Integraph receives an average of 100,000 e-mail messages a day via the Internet. Much of the traffic includes attachments sent to multiple addressees. Keesler is eager to install Exchange, because it will be possible to forward only the message itself, while the attachment gets stored on a public folder accessible by each message recipient. This Exchange feature will substantially reduce traffic to each individual mailbox.[73]

---

[69] 'Microsoft Exchange Server Product Overview," http://www.microsoft.com/Exchange/exchdata.htm, downloaded 9 January 1996.

[70] Kramer, Matt, 'Microsoft hones mail, skips groupware extras," *PC Week, 19* February 1996, pp 1, 108.

[71] Pescatore, John, 4 March 1996.

[72] Masud, Sam, "Troop information goes on line, avoids battlefield mud," *Government Computer News,* 19 February, 1996, p 8.

[73] Schwartz, 26 February 1996, p 9.

Microsoft Mail provides digital signatures and encryption to ensure security. It also provides native support for Internet and X.400 connectivity thus allowing the users to communicate over the Internet. Groupware is also built into Exchange, providing a single platform for bulletin boards, customer tracking applications, and document libraries. The Exchange Client makes it easy to create and customize these kinds of applications, as well as to schedule meetings. In addition, Exchange includes an integrated Forms Designer and supports the Visual Basic programming system and the Visual C+ + development system for customizing applications even further. Exchange works with the Windows NT Server allowing it coexist with other systems, such as Novell's NetWare.

The graphical Exchange Server Administrator program provides a single-seat view of the entire system. The system administrator can manage all users and components from a single console. Intelligent monitors automatically notify the administrator of problems and reset the system.

Exchange provides a scalable infrastructure for business communications. Grouping Exchange Servers into sites-consisting of one or more servers connected on a high-bandwidth LAN—creates the infrastructure for unified administration, security, and communication services. Multiple sites can be connected by various wide area network (WAN) options, including the Internet. The administrator can manage all sites from a single console, while message routing and directory replication occur automatically within each site.

Exchange Server, however, operates only on Windows NT platforms-it does *not* operate on Windows '95 platforms. Also, this is Microsoft's first high-end groupware product. It is neither as robust nor functionally rich as Notes 4.0 which has an installed base, including all versions, of about five million.

For more information including pricing and availability, contact Microsoft Corporation, One Microsoft Way, Redmond, WA 98052-6399, (800) 426-9400, or visit their home page as listed in Appendix C.

4.6 General Comments on Novell's GroupWise XTD

Novell's current entry into the groupware market is GroupWise 4.1. It has been called the Rodney Dangerfield of messaging systems because it seemingly has been buried by all the press given to Microsoft and Lotus products. Because of features such as advanced integration of a variety of media, it has sold very well. Many organizations are quite pleased with how GroupWise integrates e-mail with scheduling, calendaring, and other Workgroup-oriented functions. Novell recently announced that it plans on delivering a DMS version of its GroupWise 4.1 messaging system by late Summer 1996.

In late summer 1996, Novell is expected to release its upgrade, GroupWise XTD, which adds a full client/server architecture to the mixed client/server and file-sharing architecture of GroupWise. XTD will retain the messaging, calendaring, scheduling, and connectivity tasks which its predecessor had. XTD will run over NetWare 3.x and 4.1 LANs and support a host

of server standards, including TCP/IP, cross-directory **synchronization,** and public-folder replication. **XTD** is expected to be a major player in the groupware market, probably ranking after Notes and Exchange once the current shakeout of new groupware products finishes.

Barry Gerber, who performed a "sneak preview" of ***XTD*** for ***Network Computing, says*** **"...** XTD adds a noteworthy set of system administration and management tools, and an impressive **workflow** application development environment. It also has a well-integrated multifunction client that includes full document management capabilities and a brilliant front end for phone conferences. Despite its heavy dependence on NetWare, XTD goes straight to the head of the class. "[74]

XTD retains compatibility with **GroupWise** so a post office can support tile sharing mail clients. The new version will provide a multi-platform, multiple-domain architecture that is more comprehensive than **GroupWise** and can be administered from a single point. XTD adds a number of new client and server features such as replicated shared folders and more extensive client/server rules for processing messages. **Workflow** processing is more extensive with programming **APIs** for allowing extensive applications to be integrated with XTD.

Elaine Elliot, ***Computer Shopper,*** adds the following note: "Even in a Windows NT or Unix environment, you'll still need a NetWare 4.1 server because **GroupWise XTD's** central message repository must be installed in a NetWare Directory Services directory. While the system will support SNMP monitoring agents as well as other server-management tools, an XTD version completely independent of NetWare is pretty unlikely. "[75]

GroupWise was the first messaging product to simultaneously support Macintosh, Windows and DOS clients. Today it supports nearly a dozen platforms, including several flavors of Unix. It also has a well-integrated multifunction client that includes full document management capabilities and a front end for phone conferences.

4.7 Groupware: The DMS Compliancy Issue

Choosing among the hundreds of groupware products is particularly challenging. As of publication date, no products have been certified by the Joint Interoperability Testing Center, Ft Huachuca, **AZ,** as being DMS compliant. Many vendors are getting their products in the testing **queue.**[76] In 1998, undoubtedly there will be many DMS-compliant products. Today, if an Air Force **organization** buys a groupware product, it must ensure the product will be **DMS-compliant.** Again, the bigger picture is that messaging is only one piece of groupware; while DMS will **standardize *messaging*** within **DoD,** functions such as calendaring, scheduling, and document-based groupware may not be **standardized** anytime soon.

---

[74] **Gerber, Barry, "Novell XTD: Message to the Wise,"** *Network Computing, 15* **January 1996, p 44.**
[75] **Elliott, Elaine X.. "Collaborative Computing,"** *Computer Shopper,* **June 1996, pp 534-546.**
[76] **More information is available form JITC's Internet site at ftp://138.27.6.2/public/DMS.html, or call (703) 476-2269.**

Given the current DMS schedule, one of the timely discussions within the Air Force is whether the it should migrate toward Lotus Notes 4.0 (released in January 1996) or Microsoft Exchange 4.0 (the server was released in April 1996). A key question is: "How is the typical Workgroup structured?" In other words, the whole Air Force, or DoD for that matter, does *not* have to migrate toward a certain product. The Air Force and DoD, as well as virtually all installations, are made up of many workgroups, usually organizationally based. It's DMS compliance and how the Workgroup functions that counts. For example, if HQ Air Force C4 Agency decides that Notes has the necessary functionality and is cost effective, that is technically fine. If the Air Staff decides that Exchange is the appropriate product for its needs, that's technically fine as well. By the same token, it might be somewhat extraordinary for each directorate within an organization to be using a different product. Bottom line-at this writing, there are *no* products which have been certified as DMS-compliant. As compliant products begin to appear, the AF and DoD direction will become clearer.

Technical considerations aside, there have been requests to formulate a preferred groupware solution for supportability issues. These requests are being reviewed within the Air Force/SC community with support from HQ Air Force C4 Agency. It is recommended that any organization considering procuring a groupware product should verify DMS and groupware policy with HQ Air Force C4 Agency/SYN or HQ Air Force/SCM1 first.

The major reason for not having to standardize on a single DMS-compliant product is that DMS is concerned with messaging and not such capabilities as scheduling, calendaring, and interacting with documents across Workgroup boundaries. Notes and Exchange servers pass scheduling, calendaring, and file replication information amongst their servers in a proprietary fashion. What transfers between one base's message transfer agent and another's is X.400 (message handling system) type information, not hooks to reach into someone else's scheduling program. Thus, DMS is not envisioned to allow someone at the Air Staff to use Notes to schedule a *meeting* with the Air Force C4 Agency even if both users are using Notes. Messaging-yes; calendaring, scheduling, and file replication-no.

4.8 Conclusions

According to analysts at IDC-Government, Notes 4.0 is still the best shrink-wrapped collaborative solution for large, complex applications. The research firm also expects Exchange and GroupWise XTD to be the second- and third-place market share holders over the next few years. Exchange Server has recently been released and GroupWise XTD (3Q96) is expected late this summer." Hewlett-Packard's plan to combine its OpenMail messaging server with a Web server and Netscape's recently acquired CollabraShare are other possible contenders in this market.

For the rest of 1996, many organizations who have not already gone with Notes 4.0 will be doing full-fledged evaluations of the major groupware products highlighted in this section. In early 1997, the marketshares for these products will start to solidify. Not only are organizations waiting to see how Exchange Server and GroupWise XTD compare with Notes,

[77] Pescatore, John, 4 March 19%.

they are also waiting to evaluate each product's native support for key Internet protocols, including **HTTP**, HTML, and Sun Microcomputer's Java.

Jeff Held finds Lotus' groupware strategy more solid than Microsoft's. In particular, he is pleased with how IBM is pursuing the strategy of linking Notes to its enterprise products. He noted that it would give IBM/Lotus a capability that even Microsoft couldn't touch, although he adds that he hopes the new IBM can execute strategy better than the old IBM. Comparing out-of-the-box capabilities of Notes and Exchange, Held states "the Microsoft solution still seems to require the user to do a lot more work to glue all the pieces together. Microsoft is nothing if not persistent, however, so it may eventually come up with a viable strategy."[78]

For organizations with mature and capable developmental staffs, many collaborative functions can be provided less expensively by using Web-based software tools. Stephanie Stahl and John Swenson, ***InformationWeek***, state, "As the Internet frenzy continues, there's no telling what the groupware market will look like in the future. The only sure thing is that groupware will no longer be synonymous with Lotus Note."[79]

---

[78] **Held, Jeff, "Collaboratus: Why doesn't Microsoft understand groupware?" *Network World Collaboration* supplement, March/April 1996, p 30.**

[79] **Stahl, Stephanie and John Swenson, 'Groupware Grows Up." *InformationWeek*, 4 March 1996, p 15.**

5. Electronic Meeting Systems (Group Support Systems)

5.1 Introduction

We have all heard statements to the effect that much of a person's work week is spent in meetings with unclear objectives, little focus, and dubious utility. Frequently, meetings are dominated by verbose individuals and discussions get sidetracked. Lots of time is wasted with little being accomplished, even to the point where attendees are unsure what was decided at the meeting or what is supposed to happen next. Other problems include limited use of management resources in the meeting, posturing because of public vote taking, and failure to follow through on action items. The question posed by Mary Ellen Kranz and Valerie I. Sessa in PC *Mcgazine* is: "But is it the concept of a meeting that's at fault, or is it the way meetings are run?"[80] Electronic meeting systems (EMSs), or group support systems (GSSs), have proven to be an answer to this dilemma and are being used in many locations throughout DoD and industry.

EMSs, software tools designed to improve group decision making, have been used in industry since at least 1990. David Coleman, founder and conference chairman for the Groupware '9X conferences, says that "although [EMSs] represent only a small part of the revenues of the collaborative technologies market, people who use these systems on a regular basis are sometimes fanatic about them, often refusing to attend meetings that are conducted the old fashioned way."[81]

EMSs are available for face-to-face meetings as well as across a network. Most EMSs are used in special-purpose meeting rooms that provide each group member with a networked computer, plus large-screen video projection systems that act as electronic blackboards. These rooms are equipped with special software that enables participants to communicate, propose ideas, analyze options, and evaluate alternatives. A meeting facilitator assists the group by helping to keep discussions focused on appropriate topics.

EMSs can be used for a variety of purposes which are as creative, purposeful, and varied as the organizations which employ them and include strategic planning, facilitation of total quality management (TQM), and community planning. Motorola and Westinghouse, Malcom Baldridge National Quality Award winners, use EMS in their TQM programs.[82] Kranz and Sessa add: "But the bottom line is that well-executed, software-supported meetings enhance the efficiency and productivity of groups. The technology is essentially transparent, and the focus is on the group process and movement toward its goal."[83]

---

[80] Kranz, Mary Ellen, and Valerie I. Sessa, "Meeting Makeovers," *PC Magazine*, 14 June 1994, p 207.
[81] Coleman, David, "Technology Can Make Meetings More Productive," *Virtual Workgroups*, March-April 1996, p 41.
[82] Jackson, Neal F., Milam W. Aiken, Mahesh B. Vanjani, and Bassam S. Hasan, "Support Group Decisions via Computer Systems," *Quality Progress*, vol 28, no 5, May 1995, p 77.
[83] Kranz and Sessa, p 209.

This section focuses on same-time, same-place systems. An extension to this premise is different-time, different-place systems. The basic benefits that apply to same-time, same-places systems apply to different-time, different-place systems as well.

5.2 Benefits

EMSs provide a dramatic solution in helping to foster successful collaboration within workgroups and consolidating the expertise of group members. Specifically, EMSs provide tools to help generate, consolidate, evaluate, and document members' ideas and information. This concept helps alleviate the constraints of time, pressure, and geographic separation and can produce results which would be impractical via the normal meeting route.

Coleman states that although electronic meetings and regular meetings are motivated by the same issues, electronic meetings have some big advantages:[84]

- Geographically remote people are able to fully participate in the meeting.
- Anonymous voting lowers individuals' inhibitions and equalizes the personal politics inherent in most meetings.
- Direct data entry permits participants to contribute simultaneously and candidly, and misunderstandings can be clarified immediately.
- All decisions and action items from the meeting are recorded electronically and can be distributed electronically.

Kranz and Sessa offer another set of benefits from using EMSs:[85]

- Saving time.
- Increased participation.
- Better-planned meetings.
- Easier to stay on track because an agenda is an integral part of the electronic process.
- Creating a wider range of alternatives for consideration.
- Providing the ability for the group to measure and move toward consensus and commitment at all times.
- Producing a stronger commitment to solutions.
- Creating meetings that are fully documented with computer-generated printouts available during and immediately following the meeting.

5.3 Common Pitfalls and Tips

Although EMSs have been successfully used for about six years, many people issues have to be overcome anywhere EMSs are installed. Overcoming potential social issues is paramount to EMS' successful use-even the best technology cannot overcome political realities. Coleman states that "meetingware offers users the tempting opportunity to tell the truth from their perspective." He adds, however, that "unless management is willing to hear diverse views, the anonymous features of meetingware may hinder acceptance of the technology."[86]

---

[84] Coleman, p 40.
[85] Kranz and Sessa, p 209.
[86] Coleman, p 43.

Another key is to convince people that it is okay to share information. While knowledge is power, many see that sharing knowledge is a way to lose power.

It is surprising how many items, which many might believe to be common sense, come to light during EMS facilitation. In addition, Carl Di Peitro, a veteran facilitator who works for Collaborative Decisions (Bethesda, MD), identifies the following scenarios which could lead to problems if not dealt with **up** front.*'

- Sharing power is not always well received by those who have it and feel they have the right answers. Many facilitators have discovered that things go much better when they review the first day's meeting with the "boss," discuss areas that might be improved, and work out a strategy for the second and subsequent days.
- Group behavior is not the same as one-on-one behavior. At times, issues being discussed in one-on-one meetings are not brought up in group meetings because individuals do not know these issues are important to others in the room or don't want to be the one to bring it up.
- Don't judge what people really believe by observing their behavior ("game face") regardless of how enthusiastically and unanimously the behavior supports an idea or course of action.
- When a group is faced with a large or complex problem, it is often better to divide the group into small teams, thereby allowing each person or smaller group to focus on a piece of the project.
  Rank, gender, and knowledge have little to do with the contributions a participant can make to the decision process. Using meetingware, excellent ideas or solutions often come from participants who otherwise do not have a great deal of influence in the group.
- Working together as a group helps establish rapport and understanding.
- The ability to vote anonymously using meetingware is very important. If certain key individuals have serious but unvoiced concerns about their group, the anonymity of an EMS can create an ***open*** environment for discussion that may not otherwise occur.

5.4 EMS Usage Sampling

According to David Coleman, "Any time a group gathers and their mission can be put in the form of one or more questions, there may **be** an opportunity to uses meetingware to facilitate the gathering, as well as **prioritize** and analyze the information. " Coleman presents the following possibilities for meetingware, i.e., **EMSs:**[88]

- Strategic and tactical planning.
- Business process redesign.
- Focus groups with employees, clients, suppliers, and experts.
- Total Quality Management **(TQM).**
- Joint application development.
- Conflict resolution or team building.
- Selection committee awards: grants, recognition, and performance.

---

[87] **Coleman, p 41.**
[88] **Coleman, p 41.**

- Training: diversity and change management.
- Resource allocation and budgeting.
- Process flow and sequencing.
- Needs analysis and job training.
- Online document and policy development, editing and review.
- Questionnaires, surveys, and suggestion systems.
- Marketing research.

5.5 Criteria for Selecting an EMS

In its 14 June 1994 issue, ***PC Magazine*** featured the electronic meeting support concept in its "The Changing Office" feature and focused on same-time, same-place systems. The evaluators examined the following three systems:

- **GroupSystems** V, Ventana Corporation ***(PC Magazine*** Editors' Choice).
- The Meeting Room, Eden Systems Corporation.
- **VisionQuest,** Collaborative Technologies Corporation.

The ***PC Magazine*** evaluators focused on the power and ease of use of each system against the three most important tasks for a same-time, same-place meeting scenario:

- Meeting creation.
- Idea processing.
- Meeting reports.

The following paraphrases what evaluators were looking for in each of the three **tasks:**[89]

> To receive an excellent power rating on the ***meeting creation*** task, a package must allow the meeting facilitator to configure the entire meeting ahead of time. In addition, the facilitator should be able to make real-time changes to the meeting (for example, if a participant leaves the meeting early). The product must provide capabilities for easily running a meeting and making changes to the meeting. Also rated was how much work the facilitator must do on the computer to move the team from one agenda item to another during the meeting.
>
> Several issues are involved in rating each package for its usefulness in ***idea processing.*** A product that scores well for power on this task should provide a strong suite of tools, while at the same time remain a transparent tool in the actual meeting. A high rating means that the package provides idea-generation, idea-consolidation, and **idea-**evaluation tools, as well as survey capabilities. Also included is the overall satisfaction of the meeting participants. Ease of use in this area is measured by how easily users can participate and add information to the meeting.
>
> Electronic meeting support software that provides clear and attractive meeting reports scores well for power on the ***meeting reports*** task. To receive an excellent rating, the

[89] **Kranz and Sessa,** pp **208-209.**

package must provide printouts of the agenda and details of each of the tasks in an easy-to-read, high-quality format. How simple it is to output comprehensive reports figures largely into the ease-of-use section of the rating.

Also keep in mind whether on not the EMS is multiplatform. Not only may this impact how easy it is to import text from project tracking software or a Lotus Notes database, forcing participants to use a machine they are unfamiliar with adds to the complexity and can increase frustration.

EMS products to consider include:[90]

- Ventana Corporation's Group Systems V; (602) 325-8228.
- CoVision's Council Services; (415) 563-2020.
- McCall, Szerdy & Associates' C.A. Facilitator; (800) 423-8890.
- Corporate Memory Systems' CM/l; (512) 795-9999.
- Option Technologies' OptionFinder; (612) 450-1700.
- Traks SoftWorks' TeamTalk Version 2.0; (310) 649-5800.
- Netscape's Collabra Share; (800) 474-7427.
- Enterprise Solutions, Incorporated's Meeting Works 2.1; (206) 822-9634.
- Eden Systems Corporation's, The Meeting Room Version 1.1; (800) 779-6338.

5.6 USTRANSCOM JTCC Facility

The U.S. Transportation Command (USTRANSCOM), headquartered at Scott AFB, IL, has installed an EMS groupware facility in its Joint Transportation Corporate Information Management (CIM) Center (JTCC). The JTCC was established in 1993 after the Gulf War to reengineer the defense transportation system. Their EMS facility was installed to facilitate the capture, analysis, and exchange of information among participants at all levels from different services and agencies.

The facility is a tool that supports TQM and the activities of a Process Action Team (PAT). The facility is based on GroupSystems V by Ventana Corporation and is operated under contract by Dynamics Research Corporation (DRC). Its configuration is shown in figure 2 and is representative of facilities of this nature. It has laptop computers for the users on a U-shaped conference table with a projection screen at the top of the U. Participants sit at the computers and use them to enter pertinent information into the system as necessary. The users' laptops, a control station, and a printer are connected to the system server through a stand-alone LAN. The projector is connected to a video switch which permits the controller to project the display from either the control station or from a participant. This allows the controller to work "off-line" when necessary without distracting the participants with system controls or to project data from the control station while other data is on the participants' screens.

---

[90] **Coleman, David, "Technology Can Make Meetings More Productive,"** *Virtual Workgroups,* **March-April 1996.**

Meetings are conducted following the rules for a PAT and the EMS system improves the meeting by permitting rapid collection of data with simultaneous data input by participants and a free flow of group information. The system also reduces the impact of dominant personalities, ensures a free flow of creative thought, provides a level playing field for participants, and eliminates the fear of reprisal with the anonymous collection of data. The system provides a complete record of the meeting with an instant output via printer and an electronic report on a diskette.

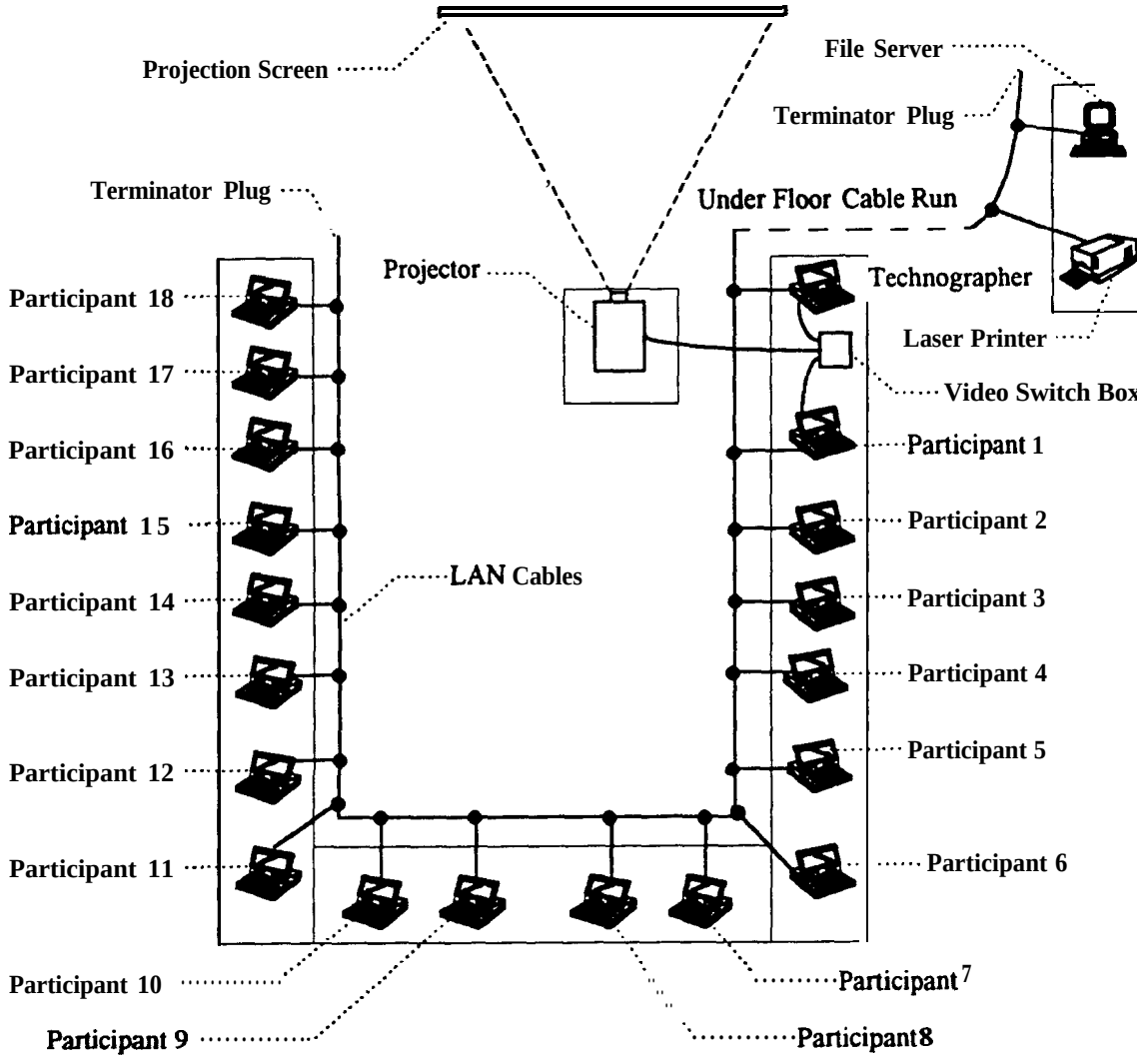

Figure 2. Diagram of the JTCC Conference Facility

Each conference, workshop, or meeting is preplanned with representatives of the host group, the meeting facilitator(s), and a technographer. The facilitator, a representative of DRC, briefs the participants on the meeting objectives, the rules, and procedures for the computer interactivity. The technographer controls the software to ensure the meeting runs smoothly. The facilitator, the technographer, and nature of the support system itself reduces the tendency to become sidetracked and focuses participants on the task at hand.

The laptop PCs at each station are used to collect input from participants in an anonymous fashion. Therefore, if the question "What is the biggest problem with System XYZ as it now operates?" is asked, any participant from the lowest-ranking individual to an executive can type responses and have them merged into the set of responses without any participant knowing who submitted the response. This allows ideas to be judged on their merit rather than the status of the participant. The software can help the participants collect and rank order various issues to allow the group as a whole to come to a consensus as opposed to being "swayed" by dominant personalities within the group.

The JTCC has experienced significant success using the EMS technology. A series of weekly workshops were held to develop evaluation criteria to test and validate transportation information systems (legacy systems) for functionality and supportability. More than 16 workshops with 15-20 participants each were held during an 8-week period. The result was development of 1,955 questions to evaluate candidate migration systems. These led to an initial reduction from 64 transportation systems to 23 transportation systems. It was estimated that a similar task would have required 18 months or more to complete without this groupware tool.

Transportation functional working groups are regularly convened at the JTCC to discuss issues, problems, and action items. "Murder board" groupware is used to provide evaluation and analysis on sensitive issues and documents, which is faster and more efficient than page-by-page commenting. It is especially effective for large documents.

Other organizations at Scott AFB-the Air Force C4 Agency, Air Mobility Command, and the 375th Air Wing-have also used the JTCC's Workgroup meeting facility. The JTCC EMS system is in great demand and has, on occasion, been asked to support three sessions simultaneously. In this case, laptops come in very handy and JTCC EMS staff are looking at wireless connectivity to better support portability needs. In addition, remote links may be set up to include video teleconferencing capabilities within the EMS context. The JTCC EMS has been so successful over the last couple of years that DRC is building a commercial EMS groupware facility outside the main gate at Scott AFB.

Depending on budgets and ergonomic considerations, some EMS facilities use desktop computers with the CPU box on the floor and the monitor recessed into the furniture to allow participants to have direct views of participants across the table. Besides a larger screen, a full-sized keyboard allows participants to type as they would in their home office without having to adapt to a smaller keyboard.

The cost of a comparable system to what is used within the JTCC system could easily exceed $100,000 once all pieces including a server, computers, sound system, cabling, conferencing software, networking software, furniture, projection system, electrical power needs, other equipment, and training. Prices vary considerably depending on the quality of the selected components. Conscious decisions have to be made concerning which components can't be economized. At present, a 20-user Ventana GroupSystems site license is less than $20,000.

Other interesting considerations when designing the facility are the types of desktops and walls to use. For instance, with walls designed for thumb tack use and glass desktops, various paper items such as lists, processes, and schedules, can be displayed under the glass or tacked to the walls offering a lot of flexibility and saving precious desk space.

One major ingredient for the success of EMS systems like the JTCC is the preparation done by the staff prior to each meeting. Each facilitator, technographer, and other staff members spend lots of time understanding the objectives of the meeting, knowing who the participants are, planning on how to run the meeting with an appropriate mix of TQM tools, and ensuring the system is working. The facilitator is particularly important to the success of the meeting. According to Jon Jonas, a facilitator with Dynamics Research Corporation:

> The facilitator leads participants during the sessions, controlling the pace and helping the team resolve issues, follow its rules, and reach consensus. This role is essentially the same as on TQM process improvement teams. If the meeting will run more than two days, two facilitators should be available to tag-team between activities and to observe and provide feedback to each other. The facilitator becomes part of the team with the only goal of ensuring the team's success. The facilitator must remain objective about the issue at hand."

5.7 A DoD Logistics Example

Another example of how EMS has been successfully used in DoD follows:

> The DoD logistics system also experienced major problems during the Gulf War. One reason was that the information systems within each of the military services had evolved with little integrated planning; there were a total of 2,000 separate logistics information systems in use in the DoD, which made sharing information and supplies very difficult.
>
> The Army and Marine Corps, with support from the Office of the Secretary of Defense, decided to develop one set of standard logistics processes and supporting information systems for all Army and Marine ground units. They began by defining their current processes and systems, which required more than 26 weeks of meetings over a 15-month period at a cost of $3.3 million.
>
> Given the difficulty in defining the current processes and system, the DoD decided to use a group support system to develop the specifications for the new integrated logistics processes and information systems. In 1993, 60 logistics experts from the Army and Marines spent three weeks in the GSS facility at Redstone Arsenal in Huntsville, AL, defining the new processes and systems at a total cost of $300,000, a savings of about 90% in both time and money.

---

[91] **Jonas, Jon, facilitator, Dynamics Research Corporation, interviewed by Maj d c Brashares, HQ AFC4A/Technology Insertion Branch, Scott AFB. IL, 23 February 1996.**

The project was such a success that in 1994, the DoD conducted a follow-up project to integrate Navy and Air Force systems into the overall system. The results were similar. In three weeks, 80 logistics experts from the Army, Marines, Navy, and Air Force defined the new processes and systems for about $300,000, again a savings of about 90% in time and money.[92]

5.8 conclusions

EMSs have proven to be beneficial in helping to reach decisions in a group environment. Systems such as USTRANSCOM's JTCC are providing a valuable service to its customers and are continuously in demand. Some studies of EMSs have estimated that their use can reduce the amount of time taken to make decisions by 50-80%. As an example, the JTCC recently conducted a series of at least 16 workshops with 15-20 participants each were held during an 8-week period. The result was the development of 1,955 questions to evaluate candidate migration systems. These led to an initial reduction from 64 transportation systems to 23 transportation systems. It was estimated that a similar task would have required 18 months or more to complete without this groupware tool.

Overcoming potential social issues is paramount to EMS' successful use-even the best technology cannot overcome political realities. Although meetingware offers users the tempting opportunity to tell the truth from their perspective, political reality often demands that the "truth" be defined in management's terms. Unless management is willing to hear diverse views, the anonymous features of EMSs may hinder acceptance of the technology. Another key is to convince people that it is okay to share information. While knowledge is power, many see that sharing knowledge is a way to lose power.

At present, there are no standards for EMSs, so products from different vendors are not likely to be compatible. If interoperability among systems is an issue, procurers must verify whether systems will work together or not. EMSs are not substitutes for effective leadership in directing the course of a meeting. A top-notch facilitator is a must and the right participants need to be involved. Kranz and Sessa add: "However, the tools [an EMS] provides, such as idea consolidation, agenda creation, and alternative ranking, all help to optimize, organize, and even formalize the processes that most groups already use in meetings."[93]

---

[92] FitzGerald and Dennis, p 39.
[93] Kranz and Sessa, p 209.

THIS PAGE INTENTIONALLY LEFT BLANK

6. Electronic Conferencing

6.1 Introduction

Electronic conferencing is an enabling technology which facilitates decision making in the Air Force by allowing people in two or more locations to see and hear each other while holding a meeting. Mandates to decrease the travel budget, the availability of document/audio conferencing equipment, decreases in the cost of studio video teleconferencing (VTC) equipment, and the availability of desktop VTC, all have combined to make conferencing a more practical solution where geographically separated parties can meet and discuss items, sometimes at a moment's notice. The Air Force is also looking at including rudimentary VTC capabilities on such aircraft as the Speckled Trout which serves senior Air Force leadership.[94] A relatively new aspect of conferencing covered in this section is virtual conferencing.

Electronic conferencing can also be extremely useful in a tactical environment. The Army has built a tactical video conferencing network to ensure that U.S. peacekeeping troops in Bosnia tread over hostile terrain as little as possible. Army commanders brief one another every day on the tactical network. The video conferencing network consists of several PCS 100 desktop systems from PictureTel Corporation, operating over secure satellite links. The Army installed routers and LANs in the Hungarian cities of Taszar and Kaposvar, and in the Bosnian cities of Tuzla and Lukavac. At each of the four sites, the hubs connect several dozen laptop and desktop PCs running commercial software such as Microsoft's Office and Windows for Workgroups. This network is also being used by Army troops to send e-mail between Hungary and Germany.'.'

The 15 March 1996 issue of ***Network Computing*** contains a buyer's guide for VTC products from 34 vendors. The March/April 1996 issue of Virtual Workgroups contains a similar guide for products from 40 vendors. Categories include?[97]

- Company contact information.
- Product name/model.
- List price/cost per seat.
- System design and software and hardware components.
- Minimum system requirements.
- ITU standards to which product conforms.
- Network interfaces supported.
- Integrated ISDN inverse multiplexing included.
- LAN/WAN protocols over which the product operates.

---

[94] Sonnenberg, Staff Sergeant Gerald, *'One* of a kind aircraft *serves* unique mission," *intercom, October 1995,* p 5.

[95] Masud 19 February 1996, p.8

[96] Molta, Dave, "Videoconferencing: The Better to See You With," *Network Computing.* 15 March 1996, pp 117-119.

[97] Perey, Christine, 'Desktop Videoconferencing and Collaboration Systems," *Virtual Workgroups,* March/April 1996, pp 22-31.

- Maximum number of video frames per second.
- Supported video resolutions.
- CODEC design.
- Echo cancellation for audio supported.
- Included data sharing capabilities.

VTEL, formerly Peirce-Phelps, developed a quiz and worksheet to help organizations determine the cost effectiveness of VTC as a solution. The templates are in Appendix F. Check their home page, http://www.timetool.com/needs.htm, for further updates and information.

6.2 Benefits

The benefits of electronic conferencing have been touted for a number of years but have been somewhat subdued because audio and video capabilities frequently have not been acceptable. With a number of important standards being approved and implemented, products are being released that satisfy many former skeptics. Travel savings used to be the primary benefit associated with electronic conferencing. Today, saving wear and tear on employees frequently ranks as the biggest benefit, especially when at least a half-day of travel on each end of the meeting is considered. The following are among the numerous benefits of electronic conferencing :

- Reducing wear and tear on employees.
- Increasing employee productivity in the office before and after the meeting vice traveling.
- Less disruption with employee's family life.
- Saving airline fares, taxi fares, hotel accommodations, and meal costs.
- Typically better focus leading to more productive and sometimes shorter meetings.

Payback from VTC can be extremely swift. Jeffrey Sira, communications specialist for LEXIS-NEXIS, based in Dayton, OH, says their VTC facilities should pay for themselves in two and one half years based strictly on travel costs. Sira adds, "If we could quantify the productivity gains, we could prove that we've paid for it already. "[98]

Similar benefits can be obtained even if an organization leases electronic conferencing facilities in the local area. These benefits must be weighed against the following cautions: changing the corporate culture to show that conferencing is an acceptable substitute for most face-to-face meetings; having complementary conferencing systems with adequate voice and video capabilities; and matching your current and perceived conferencing requirements with appropriate systems on the market.

Approved ITU standards have played a major part in the proliferation of conferencing systems throughout industry. The following list is an encapsulation of some of the prominent standards affecting the conferencing community:

- H.320—ISDN standard.

[98] **McCoy, E. R., Jr., "Getting the Picture,"** *Beyond Computing,* **March 1996, p 42.**

. H.323—LAN standard.
. H.324—POTS standard.
• T.120—document conferencing standard.

6.3 An Industry Profile for VTC

At present, there are over a dozen systems used within DoD; this creates problems with interoperability as well as obtaining the appropriate services for each system. Therefore, DoD and other industry participants partnered with the Corporation for Open Systems International (COS) to develop a VTC profile for procurement. The ***Industry Profile for Video Teleconferencing,*** produced by the COS VTC Executive Interest Group, is the DOD-mandated profile for the procurement of VTC equipment within DoD and can be used by industry and government as well. The ***Profile*** is a successor to the document specified in the 31 October 1994 ASD (C3I) memorandum which mandated its use for VTC equipment procurement.[99] See Appendix C for the DISA Center for Standards home page address and details for obtaining the current ***Profile.***

As stated in the ***Profile:***

> The purpose of a VTC profile is to provide a standards-based reference document for users as an aid in defining their procurement specifications for VTC equipment, and for vendors as a guide to understand what features and functionality users may request. it is not possible, nor is it practical, to make assumptions regarding the environments (networking technologies and services provided) in which video teleconferences will occur (i.e., who will participate, where they are located, timing of the conferences, equipment used, etc.). Therefore, this profile was developed to allow video teleconferences to take place regardless of which system is in use at either location.[100]

6.4 Studio Video Teleconferencing (VTC)

The Air Force uses studio VTC in a number of scenarios. For example, the Air Force C4 Agency conducts weekly sessions with the Air Staff to exchange thoughts, updates, and other information. Video technology is used throughout the Air Force for "distance learning" to save costs for training. Many base education centers have large satellite antennas to pick up the broadcasts. Others use interactive VTC extensively among state universities and community colleges throughout the state to expand educational opportunities.

Studio VTC systems for large meeting rooms cost in the $20,000 to $50,000 range for equipment and installation. In addition, there can be recurring leased digital telephone line costs and subscription fees. HQ AFC4A participates in the Defense Commercial Telecommunications Network (DCTN) and pays $10,000 a month for services. The DCTN contract, scheduled to terminate in early 1996, uses a T-l circuit (1.544 million bps) for its

---

[99] Castleman, Deborah R., "Videoteleconferencing (VTC) Standards Guidance," memorandum, ASD (C3I), 31 October 1994.
[100] *Industry Profile for video Teleconferencing,* VTC001-Rev. 1, Corporation for Open Systems International, 25 April 1995, p i.

connectivity. The follow-on DCTN contract will be integrated into the DISA-owned DISN contract.

VTC facilities, to include desktop VTC, are becoming far more cost effective and accessible throughout industry. Fortunately, bandwidth is becoming cheaper and many organizations are finding the conferencing concept to be extremely beneficial and adds not only to the communications process, but also to the bottom line. Surprisingly, some find the most common complaint is not the quality of the video image, but the quality of the voice transmissions.[101]

Some companies, like Kinko's, one of the country's largest copy center chains, lease their studio VTC equipment as a service. Others who have VTC in their organization lease their systems as a means of helping pay for their own capability. Kinko's teamed up with Sprint to offer room-based VTC between two or more sites. Private rooms are set up with a conference table for five to eight people and a room-based VTC system from PictureTel. The system includes a remote-controlled camera that can pan and zoom, a 27-inch TV with full-screen images, and a VCR for taping the meeting. A separate document camera sends images of printed material to the other site(s). The system uses dedicated phone lines that transmit data three times faster than integrated services digital network (ISDN)[102] lines, yielding much better image quality and higher frame rates than some desktop video systems.[103]

Many information technology professionals are not surprised when they hear that numerous sites with VTC capabilities cannot connect with each other. The video networks are limited by government contracts and interoperability problems with different interfaces. A tenant organization at Scott AFB, IL cannot connect with a world-renowned research organization in Princeton, NJ because their VTC systems are not compatible. Of further concern, the commander of the tenant organization noted recently that of all the VTCs he's participated in using the organization's studio DCTN equipment, he only recalls one wrapping up without a hitch. Many of the equipment incompatibility problems of VTC systems are being solved through standards developed by the International Telecommunications Union (ITU).[104] The other major factor in solving connectivity problems is ensuring bridges are available among various network providers.

Besides technological problems, user acceptance issues, including biases, need to be overcome before VTC is accepted as a mainstream communications tool. For instance, some individuals average one or two trips per month and believe they must see the expressions on the visited party's faces to ensure all visual expressions are seen and "interpreted." Others prefer to have an initial meeting in person, many interim meetings via VTC, perhaps major milestone

---

[101] FitzGerald and Dennis, p 4 1.

[102] ISDN is a multimedia service provided by many local telephone companies. Key applications include higher-Internet access and telecommuting.

* Hamilton, Anita, "Kinko's Copy Shops Offer Video," *PC* World, March 1995, p 180.

[104] The United Nations ITU-Telecommunications Standardization Sector, an international communications standards organization based in Geneva, Switzerland, was formerly known as the Consultative Committee for International Telegraphy and Telephony.

meetings in person, and the final signing meeting in person. If these biases are eliminated, VTC will be an integral means of collaborating across geographic areas.

As a cautionary note, do *not* assume that all products listed in DoD contracts are interoperable; procurers are strongly advised to understand not only their equipment, but also their network services and contract requirements and restrictions as well. In addition, interoperability testing is essential before making purchases.

The* 1 March 1996 issue of *Network Computing contains a review of the following four studio VTC systems. Each system earned a grade of A- with picture, performance, and audio given equivalent weights. The first two listed systems rated slightly higher because of their better performance score.[105]

- CLI eclipse 8200
- PictureTel 4000/ZX
- VTEL 227LC
- Matsushita - Panasonic Vision Pro KXC-M7500

Dave Brown, a VTC consultant, warns that "you may get many different opinions and absolutely stated recommendations, but you must ultimately decide on your own what is most comfortable for you."[106]

6.5 Desktop VTC

While studio VTC will remain prominent for years, desktop VTC is one of the most exciting applications to emerge from multimedia technology. It combines the instant connectivity of the telephone with the visual impact of real-time video. Powerful tools such as application-sharing and whiteboarding software take advantage of the PC's strengths, letting co-workers in different locations collaborate on spreadsheets and reports even as they build personal relationships.[107] Other benefits, though hard to measure, include not losing travel time and less disruption with family activities. In addition to being a much more accessible conferencing solution, desktop VTC is expected to be a far more interoperable solution than today's VTC studio setup.

One possible negative was that some felt the ability to brainstorm might be impeded on desktop VTC systems. Michael Desmond, who tested a number of VTC products for the March 1995 issue of *PC* World, states that:

> . . . our testers felt that ISDN-based systems offer passable video quality and accurate audio/video synching that improve communications with coworkers. Just keep in mind that one-on-one meetings work best. Group meetings are hampered by lack of video

---

[105] **Brown, Dave, "Bytes, Camera, Action,"** *Network Computing,* **1 March 1996, p 52.**
[106] **Brown, p 53.**
[107] **Desmond, Michael, "Video Conferencing,"** *PC World,* **March 1995, pp 177-186.**

detail when the camera encompasses a wide field of view, so it can be difficult to identify who is speaking.[108]

Another key is how comfortable people are with desktop VTC meetings in lieu of meeting face to face. For many, there is absolutely no problem. Others feel they miss too much because the window on the monitor is too small and participants can't read facial expressions.

Use of desktop VTC saves time and money, although initial installation costs of video and audio equipment are high. A look at the following example gives an indication as to potential cost savings using desktop VTC. The figures, extracted from the March I995 issue of *PC* World, indicate that the system is cost effective when at least four trips are taken to the same facility.[109] It should be noted that charges for ISDN service might approach $50 an hour. In addition, ISDN service is only now becoming widely available in metropolitan areas although there are still some problems going from one Local Access and Transport Area to another.

San Fmncisco to New York round-trip tmvel		*Intel ProShare setup*	
Air travel	$1451	2 ProShare systems	*$4998*
Food and lodging	*220*	*2* NT-l adapters	*700*
Parking and taxis	*85*	*2* ISDN installations	*440*
	- - -		- - -
Total	$1756	Total	$6138

If the San Francisco crew also had frequent contacts in other systems such as Chicago and Dallas, those cities would need compatible equipment as well. For those in the Air Force contemplating this scenario, it must be remembered that travel and equipment budgets are different "colors" of money and may complicate the procurement of desktop VTC.

An evaluation in the 1 March 1996 issue of *Network Computing* rated the following six desktop VTC systems (picture, performance, and audio were given essentially equivalent weight):"'

- RSI ERIS (selected for "Editor Refuses to Give it Back" award).
- BT Visual Solutions VC7000.
- PowerMac 7100 AV.
- VTEL EnterpriseSeries Personal Collaborator.
- PictureTel LIVE 100.
- Intel ProShare 200 V1.9.

[108] Desmond, p 179.
[109] Desmond, p 179.
[110] Brown, p 48.

In the next four subsections, desktop VTC is broken down into two different types of networks-the wide area network (WAN) and the local area network (LAN). Then, we will examine the Army's Desktop VTC (DVTC) contract and conclude with some final comments.

6.5.1 WAN-based (ISDN and POTS) VTC Systems

The justification for WAN VTC is primarily to reduce travel costs. By contrast, the justification for LAN VTC is to increase productivity within the office.

The usual communications medium for WAN VTC is known as ISDN. ISDN service provides data throughput that is more than four times faster than that of existing modems which is suitable for the heavy demands of full-motion video; however, the service is not universally available.[111] Many expect to get 128 Kbps over ISDN using clear basic rate interface (BRI). However, most inter Local Access Transport Area trunks use 56-Kbps channels. 'Therefore, expect for the most part to have 112 Kbps.[112]

In order to set up a PC for VTC, a video camera, some sort of microphone or speakerphone system, and several megabytes of software will be needed. At the heart of the software products is compression technology that allows huge streams of video data to be sent over a communications line. Compression reduces bandwidth requirements by sending only changes that occur between frames; thus, movements, such as someone moving in the background, will degrade video quality and reduce frame rates. Even with compression, ISDN-based video won't maintain frame rates much higher than 10 or 15 frames per second (fps)—significantly lower than the 30 fps rate of television.

ISDN systems, as well as studio VTC systems, comply with ITU H.320 standard. PictureTel, AT&T, and Intel support H.320 in their desktop products so they can connect to both studio VTC systems and to each other. For now, H.320 systems from different vendors do not necessarily have common enhanced featured like application sharing, even though they still transmit standard video. However, the T. I20 standard defines document sharing, application sharing, and whiteboarding. Application sharing and document conferencing are often integrated into a video conferencing package, but can also be purchased separately.

In addition to ISDN, the plain old telephone system (POTS) also provides a medium for WAN video conferencing. The video quality of the systems that work with standard analog telephone lines have frame rates around five fps. The ITU-T is developing an interoperability standard (H.324) for the analog public-switched telephone network.

The ITU standards define interoperability among products of similar groups. In other words, POTS-based products cannot talk to ISDN-based VTC products. The key standard for ISDN

---

[111] Basic rate ISDN, 2B+D, provides 144K bps (two 64Kbps data channels and one 16Kbps signaling channel) over gray wire. Of this, throughput for a single application can reach 128K bps.
[112] Brown, 46.

connectivity is H.320 and the key standard for POTS connectivity is H.324. Beware of systems using proprietary schemes; they can't talk to each other at all.[113]

6.5.2 LAN-based Desktop VTC Systems

The technology for LAN-based desktop VTC is still maturing. Vendors employ a variety of promulgated standards, preliminary standards, and proprietary systems that are incompatible for the most part. Internet applications are pushing desktop VTC as well. Some of the advantages of VTC on the LAN are productivity improvements generated from enabling workers to conduct meetings from their desks. The ability to broadcast video over the LAN is another feature that could be purchased separately at lower cost, if the requirement were to disseminate broadcast information like Commander's Call or CNN Headline News to a large group of PCs.

Unlike WAN-b& desktop VTC systems that comply to a standard like H.320, desktop VTC over the LAN does not have a standard at this time. The ITU-T is working on the standard H.323 for interoperability in the LAN environment. Currently there are four different technologies that can provide VTC over the LAN:

- Internet Protocol (IP)-H.323.
- Asynchronous transfer mode.
- Iso-Ethernet.
- Separate analog video networks.

When choosing one of these technologies, there are several different factors to consider; these include cabling restrictions, overall LAN improvement, acceptable video quality, general utility, and cost.

In addition, each of the LAN technologies has an advantage over ISDN because the gateways to the WAN can more efficiently use the CODECs and save on the recurring ISDN fees. If every user had ISDN to their desk, every user would be charged for the installation and monthly recurring fees even if they did not call the WAN. Each of the above technologies provides a gateway to bridge into the H.320 WAN.

6.5.2.1 Internet Protocol (IP)—H.323

The H.323 standard defines a method to encapsulate video onto IP packets, the *de facto* standard for most Air Force networks. The video traffic can be controlled with existing security tools such as packet encryptors (e.g., Motorola NES), packet labelers (e.g., IP security option), and firewalls. LAN administrators can continue to use the existing cable plant (category 3 cable). The video will simply appear as more traffic, which can be managed with existing management tools. The risks involved with installing this type of system are relatively low.

[113] Desmond, p 178.

The H.323 standard is not expected to be approved before June 1996. Pre-H.323 products will not be interoperable with other IP-based VTC products. Expected frame rate for H.323-compliant products should range from 5-20 fps. Users acceptance of low quality video might jeopardize the overall utility if no one uses the system. If video conferencing proves to be as prominent as the telephone, the LAN might not be able to handle the traffic. The overall cost per seat in a LAN-based VTC system ranges from $2,000 to $5,000, including hardware, software, and ancillary network equipment. The total for this type of system is approximately $3,000 per seat.

6.5.2.2 Asynchronous Transfer Mode

ATM networks are designed to handle voice, video, and data. This option might seem to be the logical choice. The advantages are that ATM is highly scalable to increased bandwidths. ATM would provide for virtual networking within the enterprise. ATM offers better quality of service and different classes of service. The 25.6 Mbps interfaces are suitable for category 3 cabling.

The disadvantages are that installing an ATM network today is extremely risky. The standards are still evolving. There is a lack of support for current products as well as a lag in implementation for new signaling and management strategies. The total costs associated with ATM are relatively high-approximately $5,000 per seat.

6.5.2.3 Iso-Ethernet

Iso-Ethernet (IEEE 802.9a) provides both the 10 Mbps Ethernet capability with an additional 6 Mbps of synchronous data. The advantages are that it will provide a protocol that is designed for high quality video at reasonable cost. Access to the WAN is simplified with Basic Rate Interface (BRI) bonding in the gateway.

The disadvantages are that users will have to change their network interface cards (NICs) and the network administrators will have to manage another hub in the network closet. In addition, this option will not increase the performance of the LAN and it is not scalable for many users. The total cost is approximately $2,500 per seat.

6.5.2.4 Analog Video Networks

The broadband analog solution is like installing a closed circuit television system onto the LAN. The advantages are that you have extremely high quality video. It uses the concept of a video PBX, that can efficiently aggregate the number of coder/decoders (CODECs) needed to get to the WAN. With high quality video, it could be more readily used for surveillance, on-site training, and broadcasting CNN Headline News.

The disadvantages are that it does not increase the performance of the LAN. This type of network is difficult to install and maintain. The cost is approximately $3,500 per seat.

6.5.3 The Army's Desktop VTC Contract

The following is excerpted from the overview of the ***Army DVTC Indefinite Delivery/Indefinite Quantity (ID/IQ) Buyer's Guide:***

> The Army's Desktop VTC contract provides access to commercial products which bring VTC capabilities to the desktop. With this contract, three basic products are combined with a number of devices to provide a choice among five different configurations generally divided into point-to-point and multipoint categories.
>
> TRW's desktop VTC architecture uses two of the three basic products to provide both point-to-point and multipoint capabilities with the addition of a Multipoint Control Unit. Their design approach gives an organization flexibility of starting with point-to-point then progressing to multipoint at a later date.
>
> TRW's contract also makes provisions for engineering services, user training, maintenance, user help-desk services, spares, and equipment warrant. All products and services can be ordered separately by Contract Line Item Number (CLIN) for added flexibility in tailoring a desktop VTC program to meet an organization's needs.
>
> The contract received DISA approval on 23 September 1994, which is a requirement in all new procurements for VTC services and equipment. TRW says the contract complies with DoD policy on VTC management, acquisition, and standards, dated 26 October 1993. The ***Army DVTC Indefinite Delivery/Indefinite Quantity (ID/IQ) Buyer's Guide*** describes the products and services available under the Army's desktop VTC contract and the procedures for placing an order.[114]

Point-to-point desktop VTC products on the contract include:[115]

- Using plain old telephone system: ShareVision PC3000.
- Using local area network: ProShare 150.
- Using high-speed digital circuits: C-Station and ProShare 200.

Multipoint desktop VTC products on the contract include:[116]

- Using local area network: KALCOM QUAD.
- Using high-speed digital circuits: MCU - 2 Carrier SCC.

Although PictureTel and AT&T are the giants in the field, the Army selected C-Phone"' by Target Technologies, Inc., for its desktop VTC contract with TRW, Inc. in October 1995. All of DoD can use the contract. In addition, Daniel Flohr, chairman and CEO of Target

---

[114] ***Army DVTC Indefinite Delivery/Indefinite*** *Quantity (ID/IQ) Buyer's Guide* **(DISA approved), TRW Space & Electronics Group, Avionics Systems Division, Official U.S. Government ID/IQ Contract Number: DAAB07-95-D-L264, revision C, October 1995, p 3.**

[115] *Anny* ***DVTC ID/IQ*** *Buyer's Guide,* **pp 4-7.**

[116] *Army* ***DVTC ID/IQ*** *Buyer's Guide,* pp **9-10.**

[117] **The C-Phone product is part of the C-Station package.**

Technologies, Inc., says the House of Representatives is considering the system at the prodding of Representative Charlie Rose (D-NC).[118]

The C-Phone hardware and software retails for less than $2,000 per workstation and is available in both ISDN- and LAN-based configurations. Dan Carney of *Federal Computer Week states:*

> A C-Phone system works like a PBX because it lets users place and transfer calls to other desks in the office as they would with the telephone system. Off-site calls go through a switch, where they connect to another video PBX on the other end. The C-Phone also uses a dedicated communications path. Target provides an adapter card that routes a standard NTSC or PAL TV signal into and out of the PC. This means users must run additional wires through their office to carry the signal. The performance is full-speed, 30 fps video that people are accustomed to seeing on TV.[119]

The cost of basic equipment per PC usually ranges from $2,000-$6,000, acceptable systems can be had for under $2,500 per seat.[120] Yet, despite the availability of low-cost products, triggered by new standards, the oft-predicted boom in VTC remains elusive, according to Ricardo Castillo, a contributor to *Communications Week.* The nagging question, according to Castillo, is: "Do users really want or need video?" As collaborative computing and groupware products threaten to swamp the stand-alone video market, the answer may be: yes, but only as part of a larger solution for team working.[121]

6.5.4 Final Comments on Desktop VTC

Despite the technical momentum, users remain skeptical and vendors are unsure. The total price per seat remains high and end-users may require a lot of help desk support. Too, they are unsure about the business benefits of video. Analysts and users agree that document sharing and collaborative work is now driving the market. Many information technology professionals believe that video is a junior partner. Corporations are opting for data collaboration tools over video by a ratio of 3-to- 1.

Analysts say that LAN-based desktop video products will likely dominate the corporate market, because collaborative computing and groupware have been developed largely for the LAN and Internet work environments. A great new application which will drive desktop VTC procurement is interviewing. Using desktop VTC, supervisors can interview prospective candidates in conjunction with the assignment process.

---

[118] Carney, Dan, "C-Phone helps Target Technologies make fed inroads," *Federal Computer Week, 22* January 1996, p 36.
[119] Carney, p 36.
[120] Pescatore, John, and Tamera Paulson, "Research Activity #8960," *IDC Government,* p 2.
[121] Castillo, Ricardo, "Desktop Doldrums - Despite ripe standards and technology, PC video is not grabbing *users,* " *Communications Week,* 10 July 1995.

But several major hurdles must be cleared before LAN-based desktop video is widely accepted. The biggest is that VTC requires real-time, high-bit-rate communication with low end-to-end delay-something LANs are ill-equipped to deal with. Video is constrained on WANs by the limitations of transport technologies. Until recently, most systems required dedicated channels of at least 64 kbps, limiting desktop video to large corporate networks with access to ISDN. [122]

But LAN-based video may soon be a viable commercial option on two other transport substrates: the public switched telephone network and the Internet. On the public switched network, video over a 28.8-kbps modem is now possible because of the H.324 standard. Audio and video usage is increasing on the Internet as hardware and software for these media become more widely available.

Currently, there are more than 40 products for real-time audio and/or video over the Internet. Some conform to international standards such as the Internet Engineering Task Force's Real-Time Protocol. By 1998, desktop VTC will be common, according to Al Lill, vice president and research director of advanced technologies at Gartner Group, Inc. Isochronous LAN services will be available and true switching technology will be cheap and affordable. The next generation of desktop machines will be ready as well; processors will be built-in and all you'll need is a $40 camera and about $3 of software, according to Lill.[123]

Other video products, such as the popular CU-SeeMe application, use their own protocols, but their vendors hope to establish them as *de facto* standards. Trial versions can be downloaded free via http://www.cu-seeme.com/mst.htm. The Internet and TCP/IP desktop VTC software (over 500,000 users to date) retails for under $100. White Pine Software, (Nashua, NH) is improving the software's capabilities and offering help to users in getting it up and running.[12] CU-SeeMe is a very cost-effective solution when sharp images and 30 frames per second are not essential.

CU-SeeMe was used by sailors of the Antarctic Development Squadron (VXE) 6 and U.S. Naval Support Force, Antarctica to communicate with their families at VXE-6's home base at Naval Air Weapons Station Point Mugu, CA over the 1995 Christmas season. A room was set aside at McMurdo Station, Antarctica for privacy and sailors spoke to their families for up to 15 minutes over the Internet.[125]

Industry analyst John Chambers, president and CEO of Cisco Systems, Inc., predicts desktop video conferencing will take off by the end of 1996. Bruce Ryan, a principal analyst with Dataquest, Inc., expects budgets for business multimedia to increase an average of 32% each year.

---

[122] Taylor, 1st Lt Fred H., project engineer, AFC4A/Validation Support Branch, interviewed by Maj d c Brashares and Mr John Root, HQ AFC4A/Technology Insertion Office, Scott AFB, IL, 14 February 1996

[123] Tackett, Ram, "Videoconferencing: Is the pain worth the gain?" *Network World Collaboration,* November/December, 1995.

[124] Castillo.

[125] Poulsen, JO2 Trevor, "Antarctic sailors get morale boost," *Base News,* 16 February 1996, p 18.

The following is a list of considerations to help in desktop VTC selection:

- Average cost per seat including all desktop hardware and software as well as network or backbone components.
- Ability to operate on existing PCs and workstations.
- Impact on network bandwidth.
- Ability to share resources, such as CODECs.
- Flexibility.
- Interoperability and standards compliance.
- Basic and advanced office telephone features.

1st Lt Fred Taylor, a VTC project engineer for HQ AFC4A, has these thoughts about matching the following requirements with appropriate VTC solutions:[126]

- If ***reliability*** is the primary requirement, then ISDN solutions are recommended. ISDN is implemented via ***de jure*** standards and offers world-wide interoperability. Also, studio VTC systems provide secure multipoint capability, although at a much higher cost.
- If ***administrative*** use is the primary requirement, then ATM solutions are recommended. ATM provides high quality video, network scalability, multimedia capabilities, and various qualities of service associated with ATM.
- If cost is the primary requirement, then Internet solutions such as CU-SeeMe (less than $100 per license) are recommended. These applications are fairly easy to install and offer a low per-seat cost; however, audio and video fidelity is low.
- If ***high-quality video*** is the primary requirement, then analog (broadband) closed-circuit systems are recommended. Products like Target Technologies' C-Phone provide high quality audio and video (30 fps), particularly in a LAN environment. However, these products are somewhat difficult to install.
- If ***deployability*** is the primary requirement, then POTS solutions are recommended. POTS solutions use analog telephone lines as the communications channel and can connect with the International Maritime Satellite (INMARSAT) system.
- If ***interoperability*** is the primary requirement, then H.320-compliant products and systems are necessary. ISDN systems and studio VTC systems comply with the standard. Nearly all vendors support the standard in their desktop video products so they may connect to each other as well as with studio systems.

See Appendix G for more information on VTC activities within the Air Force C4 Agency.

6.6 Virtual Conferencing

An alternative to conventional VTC has recently emerged and is being offered for testing. The technology has several names depending ***on*** the vendor, but for the purpose of this paper, we will refer to it as "virtual conferencing." Conventional VTC has a major drawback in that it requires a relatively high bandwidth for quality video. Although improved technology is decreasing the bandwidth requirements, it imposes some restrictions on the type of video to be

---

[126] Taylor, 1st Lt Fred, interviewed by Maj d c Brashares and Mr John Root, HQ AFC4A, 28 March 1996.

sent. Even then, there are some cases where the bandwidth may not be available despite the technological advances.

Virtual conferencing starts with the premise that a true-to-life video image is not really required, thus breaking the VTC paradigm. High performance personal computers with multi-media packages allow this technology to work. In a virtual conference, the users do not see each other as television-like images, but as animated three-dimensional constructions termed "avatars." Participants accept the cartoon-like images for what they are and, according to proponents of the systems, the results are often more acceptable than a lower quality video signal that is blurred or jerky.

The technology is currently being used for virtual reality entertainment and games on the Internet, but vendors are also offering packages for real-time conferencing. The result is a multimedia, multi-user, social environment that lets people communicate on-line from within a two- or three-dimensional graphical environment using graphical presentations rather than conventional video.

In virtual conferencing, avatars are generated by a program in the user's computer. The program causes the avatar(s) to move and talk based on data streams from other users participating in the conference. The data stream contains the compressed audio and any movement information for the avatar. The data stream has a much narrower bandwidth than that of conventional VTC. The virtual reality sites on the Web operate over the Internet and the users' 14,400 or 28,800 bits-per-second dial-up modems.

Virtual conferencing is considered to be in its developmental and experimental stages, so it should be used with some caution until prospective conversants are comfortable and the technology is proven to work with a large set of users. However, it is promising and may prove to be useful in the interim. Products and services that are currently available include Microsoft's V-Chat, Alpha World, WorldCHAT, and OnLive.

6.7 Document/Audio Conferencing

6.7.1 General Information

When it is not required to see conference participants, and more speed and interaction is required to receive documents rather than using facsimile transmission, some new products that are emerging can be used. They use recently promulgated T. 120 document-conferencing software. The concept of whiteboarding falls into document conferencing.

The development of the T. 120 standard for real-time, multipoint data communications is resulting in the major telecommunications giants implementing data-conferencing services; and shared whiteboard software vendors are making their products easier to use and more widely available through bundling agreements. The T. 120 communication and application protocols provide for platform and network independence, interoperability among data conferencing packages, and error-corrected data delivery. These factors, coupled with the fact that data

conferencing carries neither the culture shock nor the hefty price of teleconferencing, have positioned the market for growth.

MCUs (multipoint control units) that enable companies to bridge LAN, WAN, and modem links into a single connection for multipoint data conferences also are becoming available. Also moving this market along is the integration of data-conferencing software with other products.

Peripherals are also contributing to the growth of data conferencing. For example, **voice/data** modems, though not yet widely supported by data-conferencing software, will help eliminate the need for two phone lines for data and voice. Meanwhile, hard electronic whiteboards can enhance remote presentations by providing a familiar whiteboard drawing screen and by doubling as touch-sensitive projection surfaces.

Developers of document-conferencing software are also betting that ease of use is crucial to the widespread acceptance of sharing data and applications via whiteboards. Users should be able to install the software and use established LAN, WAN, and modem lines to seamlessly make connections.

As new technologies expand the available network bandwidth, document conferencing will become a more viable application for many companies. Corporate deployment of **circuit-**switched installations, broadband networks, ATM, and other high-performance networks will give this market a boost.

A migration path to VTC is another important feature being incorporated into some data conferencing products. One vendor allows users to start with shared whiteboards and applications, and then upgrade the software to support VTC. [127]

6.7.2 Representative Products

2 Confer, a St. Louis, MO-based distributor of conferencing products, recently demonstrated a system to HQ **AFC4A/TN** personnel. The audioconferencing system from Polycom, San Jose, CA, uses its **ShowStation** document conferencing projector for real-time document review and revision. Working in tandem with Polycom's **SoundStation** (each requires an **analog** line), **ShowStation** allows teleconference participants to interactively view, annotate and print business documents or data files such as spreadsheets, diagrams, slide presentations or memos. Computer-based presentations and files are shared by connecting a PC (via serial port) to one of **ShowStation's** auxiliary serial ports. The system used **DataBeam's FarSite** electronic meeting software.

Much like an overhead **projector**, the **ShowStation** requires almost no training and is fully operational in three steps: [128]

---

[127] **Sullivan, Kristina B., "Step up to the whiteboard, please,"** *PC Week/Netweek*, **June 12, 1995, p N/3.**
[128] **Grigonis, Richard, "PolyCom's ShowStation Document Conferencing Projector,"** *Computer Telephony*, **June 1995.**

- Dial a remote site.
- Position a document.
- Press the **"show"** button.

The device snaps a high-resolution digital image of the document or object, projects it into the conference room and transmits it to remote sites simultaneously.

Using a stylus on the liquid crystal display, participants can make notes, erase text or highlight an item as it is discussed, with changes seen at all sites simultaneously. **ShowStation** can be connected to a laser printer via a parallel printer cable to print out hard copies of annotated documents. Documents can also be viewed on a connected PC.

The suggested list price for the **ShowStation** is $10,795. The **SoundStation** unit costs $795. For more information and pricing, contact:

- Polycom, Inc., San Jose, CA ***(408) 526-9000, (800)*** 765-9266, or fax (408) 526-9100.

For information on **FarSite** software, contact:

- **DataBeam,** Lexington, KY ***(606) 245-3500,*** or fax (606) 245-3528.

The **LiveBoard** Interactive Meeting System, from **LiveWorks,** Inc. (a Xerox company), is another representative document/audio conferencing product which also provides multimedia and optional VTC capabilities. **LiveBoard,** an interactive conferencing tool, provides whiteboarding via a "shared" work surface. Although **LiveBoard** is positioned as a collaborative presentation tool, David Coleman, editor of ***Virtual Workshops,*** finds it effective in electronic meetings as well. He says **LiveBoard** "supports handwriting and permits a remote site to collaborate directly through the whiteboard software. The whiteboard, coupled with desktop VTC, permits virtual facilitation. An expert from a remote site can bring up slides, share them on the whiteboard with the group, and facilitate part of the meeting."[129]

The rear-projection, 67-inch diagonal display screen is an active matrix LCD with VGA and XGA resolution. The system can be linked to remote sites over existing LAN and WAN or via standard telephone lines. Individuals at separate locations can collaborate on various applications such as spreadsheets and document via **infrared** pens. In additional to editing and annotating capabilities (in five **colors),** files can be imported and lists can be linked, rearranged, and prioritized. Information can be displayed from a VCR, CD-ROM, laser disc, or LAN. Overall, **LiveBoard** appears to be an excellent product with various capabilities to encourage group interaction. For further information on this product, call (4 15) 812-5000 for a video tape or check their home page at: **http://www.xerox.com/liveworks.html**.

A representative sampling of document-conferencing software products can be found in the 12 June 1995 issue of ***PC Week.***[130]

---

[129] **Coleman, "Technology," p 43.**
[130] **Sullivan, p N/5.**

6.8 Conclusions

Organizations are incorporating various conferencing capabilities to assist their workforce in the collaboration process. Video, audio, and document conferencing are becoming strategic assets within industry because they have proven to be extremely cost and time effective when compared to traveling to meetings. Continuing advances in this technology dictate that procurers do extensive evaluations of both established and leading-edge products to determine which products are most suitable for the organization. As always, real requirements must be understood and, as appropriate, interoperability testing must be conducted.

Studio VTC has been around for years, is bandwidth intensive, and has been very expensive, although cost effective. Today, various organ&ions, such as Kinko's, are making studio VTC facilities available for a fee. Desktop VTC products are becoming far more common and prices are making the per-seat costs very attractive. Major reasons behind the explosion of desktop VTC products is their continually decreasing prices, improving video quality, and promulgation of various standards by the ITU. Extremely cheap solutions like CU-SeeMe are available for discussions over the Internet and are very attractive for those not needing high resolution and high frame-per-second rates.

Virtual conferencing starts with the premise that a true-to-life video image is not really required, thus breaking the VTC paradigm. Thus, effective conferencing can take place using avatars to represent participants without the expense of the bandwidth necessary for high-quality video images of each participant. Document and audio conferencing are winning new converts because of their whiteboarding capabilities. Some products can save 50 slides with each slide being five pages in length.

THIS PAGE INTENTIONALLY LEFT BLANK

7. Intranet: Private Web Servers

7.1 Introduction

Today's killer application[131] for the Internet is the *intranet*, a private Web-based network, usually protected by firewalls, that allows employees and business partners to be connected to vital corporate information.[132] An intranet allows companies using Webware to employ a single, consistent information lifeline that can provide access to almost any data the organization desires. The intranet concept is given prominent focus is this document because researchers, such as the Business Research Group (Newton, MA), expect to see Webware taking a big bite out of the overall groupware market over the next few years. The Business Research Group estimates that these products will account for 26% of all groupware sales by the year 2000.[133]

The intranet has taken such a hold in corporate America that over two-thirds of all Web servers are operating inside corporate firewalls, thus serving the need for information dissemination, exchange, and collaboration.[134] International Data Corporation estimates that there will be about five million Web servers by the year 2000 with over 90% of them being used in an intranet capacity.[135]

While intranet Web servers are currently used primarily as document publishing systems, many vendors are rapidly extending their functionality. For example, Web servers are being integrated with databases, linked to mainframes and other legacy systems, and providing workflow services. Combined with the high bandwidth capacity of corporate data networks, an organization can capitalize on advanced features such as real-time audio and video as well as collaborative applications and three-dimensional data representation.[136]

MCI's 12,000 information systems professionals follow the motto, "Collaborate, don't duplicate." Kevin Bums, MCI's director of strategy and technology, says MCI has online access to a "developers' store" that contains kernels of software code which "lets us walk around the company and collaborate electronically."[137] In essence, the ease of use in providing information to the outside world via the Web is being applied for internal corporate business at MCI and thousands of other organizations.

---

[131] A killer application is one that captures the imagination of a user group and provides immediate productivity rewards.

[132] Thyfault, Mary E., 'The Intranet Rolls In," *Information Week*, 29 January 1996, p 76.

[133] Bruno, Lee, "Groupware Vs. Webware," *Data Communications*, March 1996, p 123.

[134] Plain, Stephen W. and Thomas Mace, "Building the Intranet, Block by Block," PC *Magazine*, 12 March 1996, pp 231-237.

[135] Carr, Jim, 'Intranet delivers," *InfoWorld*, 19 February 1996, p 64.

[136] 'Intranets: Technologies, Tools. and Strategies," a *Network World* technical seminars advertisement, *Network World*. 11 March 1996, p 40.

[137] Thyfault, p 76.

Geffen Records uses the intranet to support its 225 employees. Geffen Records knew it needed a coherent strategy to take advantage of new technologies and realized that its information infrastructure was extremely fragmented and inefficient. Jim Griffin, director of technology for Geffen Records, says the intranet concept was pushed because, "We were thinking client/server and realized pretty quickly we needed a cross-platform solution," citing the mix of 60 Macintoshes and 170 PCs used by Geffen's employees.[138]

With about 40 employees permanently remote and numerous others conducting company business from home or on the road, the intranet proved to be a very coherent solution. Cost was also a factor. The price of their intranet cost about $10,000, most of it going for the $40-per-seat Netscape licenses, an extremely palatable cost considering prices for client/server solutions. Griffin is also very comfortable with the security features of Netscape's Secure Commerce Server which restricts system access by IP address.

Others are very concerned with the security implications of using the intranet concept. Ian Campbell, International Data Corporation, says he is very comfortable from the security perspective within the corporate firewall. At present, he does not recommend trusting mission critical information beyond the corporate firewall. He adds that many security experts are working this problem and he believes information will be able to be sent much more securely beyond the corporate firewall in about a year.

7.2 Benefits

An intranet helps any organization that could benefit from communicating faster, easier, and cheaper with employees, particularly those who are geographically separated. Documents that are prepared using conventional desktop applications areconverted to Web pages with commonly available conversion programs and are then loaded into the Web server. Users own and manage the content through a point-and-click interface within their desktop environment. This allows the content to be updated and delivered faster.

An intranet is valuable to an organization for the same reasons as internal electronic bulletin board systems (BBSs) and private branch exchanges (PBXs). For most organizations, the vast majority of communication is internal vice external. Therefore, intranets, BBSs, and PBXs are methods of better serving internal users while helping control costs and maintaining internal control. Joe Tooman, a network administrator for Sherwin-Williams in Cleveland, OH, is a typical intranet enthusiast who says:

> The internal Web was a cheap and effective solution that let us distribute information across our wide area network without making a heavy investment in the infrastructure or in user training. We are planning to initially deliver policy manuals, employee information, and discussion groups through a Netscape server . . . along with a suggestion box, announcements, and searchable lab reports.[139]

---

[138] Karon, Paul, "Intranet solution makes Geffen shake, rattle, and *roll," InfoWorld,* 12 February 1996, p 65.
[139] Welch, Douglas E., 'The Inside Advantage," *LAN Interoperability* supplement, February 1996, p 24.

Interestingly enough, not all at Sherwin-Williams were excited about the intranet. According to Douglas E. Welch, director of MIS for Hollywood Online in Santa Monica, CA, "(Tooman) faced some internal opposition from Lotus Notes users and developers in his company who felt a similar technology on the network would threaten the success of the Notes applications. Others were worried that the Web server would impact network speed and bandwidth. But these problems never materialized, and users soon let their concerns rest."[140]

Federal Express is another great example of an organization using the intranet to gain a competitive advantage and save significant sums of money. Robert Bickel, Internet *World,* reports that anyone on the Web "can access the FedEx home page and see when a package arrived at its destination and who signed for it. This site, which none of FedEx's cornpetitors have duplicated, saves customer time on the telephone trying to track their packages."[141] Yes, people can still call FedEx via an 800 number. However, this is usually more time consuming than access via their intranet and requires extra personnel on FedEx's part. In addition, every customer who uses the intranet vice an 800 number helps FedEx cut back significantly on its 800 bill. Intranet costs, compared to 800 costs, are minimal.

The Air Force is beginning to use on-line access for operating instructions and reference documents because this approach is more efficient than distributing hard copies. Hard copies tend to get lost, misfiled, and outdated. Updating and keeping track of hard copies takes time which might otherwise be spent on more productive tasks. Assuming individuals are assigned to keep track of the validity of data items and continually search and capture other relevant information for placement on the intranet, users are the clear winners. The intranet is an excellent tool to use for routine tasks such as requesting travel orders and filling out travel vouchers. When changes occur due to new legislation, new guidance or policy from higher headquarters, changes in authorizers, or changes in financial codes, the Web page is updated and immediately available for reference whenever needed.

7.3 Webware and Groupware Comparisons

While an intranet and groupware can handle many of the same types of activities, Webware doesn't offer the functionality of integrated databases and database replication that are associated with Notes, Exchange, and GroupWise XTD. For example, groupware queries can be custom-tailored to deliver exactly the information requested by end users. With Webware, this can be done with heavy-duty coding in languages like C and Visual Basic to an API (application portability interface). Simple text-based searches are more the forte of search engines common to Webware products.'"

David Coleman, principal analyst at Collaborative Strategies, states lists five capabilities that groupware has today that the Web does not. He cautions that while these five hold true today,

---

[140] Welch, p 24.
[141] Bickel, Robert, 'Building Intranets," *Internet World,* March 1996, p 73.
[142] Bruno, p 124.

these may change in as little as a year as vendors work to make the Internet and the Web more interactive. The five capabilities are: [143]

- Security: all collaboration calls for some tradeoff between security and communication; Notes today provides better security than the Web.
- Sharing objects: Notes 4.0 is OLE 2-compliant; passing objects on the Web is not as easy.
- Replication: Notes works well in either a connected or disconnected mode; this is not true of the Web.
- Threaded discussions: while some Internet news groups support threaded discussions, they are not as powerful as Notes, Collabra, TeamTalk, or Conference Plus.
- Workflow: Notes easily supports workflow and has an API to which many workflow vendors write; the Web supports only the most rudimentary workflow.

General Motors Corporation has about 50,000 Notes clients worldwide serving as the front end for substantial client/server applications such as integrating design activities in the U.S., Europe, and Australia. GM also has used the Web over the past few years to disseminate information in its engineering community. Recently, GM personnel examined various applications to determine which would be more appropriate: the Web or Notes.

> Donald G. Hedeen, director of information delivery and deployment, and Rob Sellars of EDS, who manages GM's consistent environment program, drew up a list of 20 types of applications, then asked a number of questions about each:
>
> - Does the application push or pull information?
> - Is it short-lived or permanent?
> - Will it serve the entire enterprise or a single Workgroup?
> - Is it internal or external?
> - Is it process-oriented?
>
> Taking into consideration the current state of technology, they then constructed a matrix for determining whether to use Lotus Notes or the Web. For example, a bulletin board may or may not require multiple levels of data access. Although in either case people would "pull" data when they need it, a multilevel access requirement would be better met using Notes, and a Web-based application would be better suited for an open-access bulletin board.
>
> In general, says Sellars, the more complex the application, the more likely it is that Notes will be the appropriate solution. Although the Web is recommended for fewer applications on the GM matrix, Sellars says that for handling sheer volume of information, the Web wins. "Both are powerful tools, and you can make each tool do almost everything the other tool can do," he says. "It's just a question of what's better now, in terms of ease of use and cost of use. More important, you need to understand

[143] **Coleman, David, "Collaboration on the Internet-Can Traditional Groupware Survive?"** *Virtual Workgroups,* **March-April 1996, p 11.**

both, have some experience with both, and let the marketplace sort out what's the most effective use of tools for various business functions.[144]

Groupware vendors and Webware vendors are each working to incorporate functionality from the other. The following table gives a basic comparison between using groupware and using an intranet.[145]

Webware (Web Servers and Browsers)

Pros	Cons
• Based on open standards • Inexpensive	• Few integrated applications • No integrated databases • Adding functions demands heavy-duty programming • Lax security

Groupware

Pros	Cons
• Shrink-wrapped applications (like workflow management and info sharing) • Integrated databases • Database replication (synchronized updates) • Simple scripting languages • Tight security	• Proprietary • Relatively expensive

7.4 Intranet Architecture

What makes the intranet concept so popular for developers is its open, robust, and scalable three-tiered architecture, especially when compared to the typical two-tiered client/server applications deployed on PC LANs. The three-tiered Web architecture can be broken down as follows:

- The GUI (graphical user interface) tier is composed of the Web browser.
- The middle tier is composed of the Web server which contains application logic with ties to back-end databases.
- The final tier consists of application servers.[146]

Robert Bickel states that "scalability can be even greater when the idea of multiple Web servers is introduced. Even within a single application, one Web server can 'hand off a user to another less-used Web server without intervention."[147]

---

[144] Dragoon, Alice, 'A Web/Notes Decision Tool," CIO, 1 March 1996. p 46.
[145] Bruno, p 124.
[146] Bickel, p 74.
[147] Bickel, p 74.

Another architectural consideration for an intranet is where to place firewalls, a combination of hardware and software which provides a safeguard against outside intruders. Firewalls can be configured to allow traveling employees access to the organization's intranet via checking an IP address or using a password.

Today, there are many excellent tools useful for developing Web applications. At present, most Web applications run via a mechanism in the Web server called the Common Gateway Interface (CGI). Robert Bickel describes the process as follows:

> The Web browser initiates the process when a Hypertext Transfer Protocol (HTTP) request to the Web server is made where the URL specifies the name of a gateway program rather than an HTML document. The Web server then executes the specified gateway program, with the ability to pass arguments to the program to tell it what to do (for example, "Search on the name Smith in the database"). The gateway program does its work-perhaps calling into action other programs or resources like a database server-and returns a formatted HTML page to the Web server. The Web server passes this HTML page just as it would any standard HTML document back to the browser.[148]

See Appendix H for a set of CGI-based application tips. See Appendix B for a list of Web addresses for CGI-based application tips and selected intranet tool vendors.[149]

7.5 An Air Force Example

Northrup Grumman uses Web-based technology to deliver on-line access to technical data, engineering drawings, and component specifications involving the B-2 bomber. The federal government estimates that the Contractor's Integrated Technology Information Service, supported in part by Northrup's intranet, is expected to save the Air Force over $800 million during the 20 years it will be used. Dennis Mueller, Northrup's project manager, says the Air Force can re-engineer components originally created by Northrup for the B-2, then place the redesigned components out for competitive bid, resulting in the projected savings.[150]

Mueller adds that Air Force engineers access the intranet from just three locations in the US. The three sites are connected to Northrup's RS/6000 machine via T1 and T3 circuits. All the data passed within the intranet is encrypted. Web-based technology was chosen by Northrup because it was relatively standardized and provided the best, most flexible front end of all the methods examined by Northrup. Mueller adds that other methods would have forced Northrup and the Air Force to use only specific hardware, especially at the client end.[151]

---

[148] Bickel, p 76.
[149] Bickel, pp 74, 76.
[150] Cm, p 62.
[151] Cm, pp 62-64.

7.6 Intranet Collaboration and the Internet

With the evolution of the Internet and standards for communications, it no longer makes sense to think about software sharing a common central database, according to Stanford University mechanical engineering professor Mark Cutkosky. He exchanges electronic information with design engineering subteams at different locations across the country using the Internet.

Relying extensively on the Web as a collaborative and archiving tool, the engineers designed and made a prototype for a reasonably complicated, sophisticated electromechanical system in six months using Internet-based tools. The Web made our lives easier, he said. It meant that suddenly there was this robust software that would allow us to post design information and text and graphics and let everybody share it. Team members also conducted videoconferences over the Internet using the IP Multicast Backbone protocols.[152]

Collaborative development of new technologies is being fostered by new organizations such as the Bay Area Multimedia Technology Alliance (BAMTA) founded in April 1995. It is a non-profit alliance of companies, non-profit institutions, and government agencies.

This collaborative development provides the tools and environment for technology and partnership exploration. A multi-million dollar, state-of-the-art test lab for networked multimedia, now under construction by BAMTA in Santa Clara, CA, will include advanced networked computing systems, digital production suites, secure development rooms, and training facilities for use by member organizations.

Networked multimedia and additional collaborative technologies based on computer and communications technology will be tools to link regional centers of technology and innovation nationally and globally. It will then be possible to build the virtual organizations that will define the world we live in.[153]

7.7 Vendor Intranet Offerings

Numerous vendors have intranet products available and many others have products in development. A small sampling of recent announcements and rollouts follows. Sourcecom Corporation has its InRoute Broadband Access Router which provides asymmetric links of 6.144 Mbps to the desktop and 640 Kbps from the desktop to corporate intranets and the Internet. 3Com and Cabletron Systems rolled out separate techniques for overcoming bandwidth limitations in switched networks. Silicon Graphics, Inc. has a combined hardware/software package called WebForce, billed as "intranet in a box." Hewlett-Packard Company is partnering with America Online, Inc. subsidiary ANS Core Systems, Inc., to offer end-to-end intranet service to enable users to circumvent bottlenecks on the Internet without having to incur the full cost of building their own private intranet.

Novell is now calling NetWare an intranet server, vice strictly a network operating system. The next release of NetWare, dubbed Green River, is expected to be the first version of

---

[152] Schultz, Beth, 'Collaboration by Design." *Network World Collaboration,* January/February 1996, pp 22-24.
[153] Chandra, Neal, "The New Age of Collaboration," *Telecommunications,* January 1996, pp 58-59.

NetWare expressly intended to use Web technology to distribute information within corporate LANs. Oracle Corporation announced three Web applications designed to strengthen its links to corporate intranets. Oracle Web Employees, Oracle Web Customers, and Oracle Web Supplier are expected to cost $25,000 each and are aimed at large corporate Information Systems shops and will link internal users and external customers to applications running on Oracle7 database and Oracle Web Server. Bottom line-intranet product announcements are a weekly occurrence.

7.8 Conclusions

Intranets allow fast and inexpensive distribution of news, policy changes, and other information, particularly to those who are widely geographically separated. An example of how an intranet might be used in the Air Force is to provide current local instructions for requesting T'DY travel orders and filing a travel voucher. When changes occur due to new legislation and new guidance or policy from higher headquarters, applicable Web pages can be changed quickly and made immediately available for information and reference.

The real key is having a way of not only finding new and relevant information for employees, but ensuring that information is accessible at the earliest possible time by employees. This type of information can be everything from the latest per diem rates for Washington, DC, the latest virus-checking software from the LAN managers, the latest help files from the help desk, and the latest technical reports which are relevant to your organization.

Intranet usage will continue to grow over the next few years as more organizations understand the merits of using intranets and they become more proficient in their potential. Just as the backbone, the Internet, continues to evolve, applications such as the intranet will become more robust and valuable as well. It is expected that there will be over five million Web servers in the year 2000 with at least 90% of them serving an intranet capacity. The intranet should not be seen as a replacement for groupware products like Notes and Exchange; it should be seen as a complementary groupware tool. Their niche is strong document database capabilities which the intranet can't touch at present. However, product developers in both the document exchange and Webware categories are working at incorporating each other's strengths.

Mary Thyfault of *InformationWeek* says that perhaps the most profound change brought about by corporate intranets will be social vice technological. Sherman Woo, US West's director of information tools and technologies, adds that "intranet technology has given us a new tool to command political influence that changes the organization as a whole. The technology is trivial; the hard part is community."[154]

Appendix I, "Nine Steps to Intranet Success," is an excellent guide for those transitioning toward an intranet or trying to revitalize an existing intranet into an even more important piece of the strategic puzzle.[155]

---

[154] Thyfault, p 78.
[155] Bickel, p 74.

8. Workflow Management and Document Management Systems

8.1 Introduction

Although frequently not included in the groupware concept, two related and extremely important extensions to the concept are workflow management and document management. *Workflow management* is a tool or set of tools that allows individuals and groups of individuals in both structured and unstructured work environments to automatically manage a series of recurring and non-recurring events in a way that achieves business objectives. *Document management* is an integral, yet more focused piece of the overall workflow concept. There is a pressing need to organize the surge of electronic documents being created and then sought for reference by workers at all organizational levels.

Workflow has been invaluable in helping organizations manage the flow of information throughout their enterprises for years. The real trick is understanding that unless the fun&mental business processes of an organization are totally reassessed, implementing workflow tools will most likely provide little benefit. It is imperative to get appropriate process information from all key players associated with a process. With these key players, the business process can be re-engineered. Only then, as long as the results of the re-engineering are culturally acceptable within the organisation, will workflow tools pay dividends as promised. This thought cannot be overemphasized: concentrate on business processes first and foremost; only then can technology put it all together.

Ilan Greenberg, *InfoWorld*, adds that applying the concept of workflow to an organization's processes can be quite difficult and time consuming. He states, "In order for information to flow seamlessly from user to user, job responsibilities must be clearly defined, individual security levels *need* to be identified, and the entire business process has to be agreed upon by all participants."[156]

Greenberg provides keen insights into the groundwork needed to take advantage of the capabilities of workflow tools:

> The first step *on* the road to workflow is to map out exactly how you want workflow to be implemented, a process that can take months of management meetings and additional time for application development and testing. It is of key importance to have senior management identify exactly which processes are repeatable procedures and which are not likely to occur more than once. Down the line, a well-planned workflow system should be flexible, allowing IS staff to change the application logic on the fly. But the real work is done up front, at the business process level. . . .[157]

---

[156] Greenberg, Ilan, 'It's all in the Process," *InfoWorld, 4* March 1996, p 60.
[157] Greenberg, p 59.

8.2 Benefits

Workflow tools, if integrated properly, will help facilitate the flow in information within an organization. These tools help route documents and reports to predefined users automatically. Keith Goldberg, marketing manager for PeopleSoft, cautions, "Workflow itself? It's easy. Trying to take advantage of it is the hard part. . . . Workflow gives you certain benefits, but a lot of [the work] is in the maintenance. People think this is a magic ointment. What they have to realize is that workflow doesn't give them something they couldn't do before; they can now just do it quickly and easily. "[158]

Ease of use makes ad hoc tools, which may facilitate the flow of a single document on a single occasion, a good entry-level workflow solution for companies wishing to automate simple, forms-based processes.

Later in this section, examples will cover two organizations and cover various benefits of using document management programs.

- Bankers Trust Co., New York, NY, is able to generate thousands of marketing reports involving graphics, text and spreadsheets, from many sources. They are able to retrieve them in seconds, instead of hours.
- The acquisition organization at Air Force Headquarters in the Pentagon scans documents and stores them in a server that allows any client on the Air Force network to access them. The automated system keeps the chain of command in the loop but gets work to the action officer's desktop immediately.

8.3 Workflow - Groupware Differentiation

There is a lot of confusion on whether or not workflow is part of groupware or a related discipline. This is always subject to debate when the topics are discussed. In a recent article in *CIO*, Mickey Williamson presented some thoughts:

> Generally, workflow is a transaction-based technology in which electronic documents move from workstation to workstation, driven by business rules encoded in a workflow engine. By contrast, groupware technology sets up ad hoc structures driven by contributors and content, says Forrester Research Inc.'s Eric Brown. Thus while workflow systems are inflexible about the form and movement of document through the organization, "groupware is free-form. It can go anywhere it needs to go," he says. When you start to implement process-based application to coordinate the activities of a group, that's a workflow application, not groupware. "[159]

8.4 Workflow Tools

Workflow tools support structured routing, review, revision and tracking of documents, business forms, and other information. Many workflow products access server- or host-based file, document and database management systems. Files relating to a particular task can often be routed as a linked "folder" and presented to recipients as a list of pending action items.

---

[158] Greenberg, p 60.
[159] Williamson, Mickey, "Where Does Workflow Fit In?" *CIO*, 1 March 1996, p 40.

Multiple versions of a particular document can be tracked by server-based document management systems. Once a process is complete, the contents of a form can be written to shared corporate databases.

Workflow-specific standards are nonexistent, reflecting the market's youth, dynamism and technological complexity. The **Workflow** Management Coalition **(WMC),** a broad-based vendor consortium, has defined a reference model for ongoing standards development but has not yet issued any finished standard. Microsoft recently submitted a proposal to the WMC that, if it bears fruit, could provide an industry standard for document tracking across multivendor, mail-centric, ad hoc **workflow** environments.

Successful adoption of **workflow** technology requires making choices that will prevent an organization from being locked in to one vendor. Some integration and **customization** of **out-**of-the-box **workflow** products will be needed to meet all of your **workflow** requirements, according to Reed Sorensen of the Software Technology Support Center (STSC), Hill AFB, UT. The STSC offers a six-hour workshop on process workflow. See Appendix J for more information.[160]

The lack of interoperability standards means that users venturing into the **workflow** market will have to place their bets with a particular vendor's proprietary solution. Applications written to one vendor's programming interface will probably not be able to access process models and work lists supported by another vendor's run-time **workflow** environment. As a result, it would be difficult or impossible to route and track documents across different vendors' proprietary **workflow** environments.

8.4.1 Production and Ad Hoc Categories

Available **workflow** solutions can be grouped into two categories: production and ad hoc. ***Production*** **workflow** systems automate complex business processes that vary little from case to case, similar to a white-collar assembly line. They support high transaction volumes, shared document repositories and sophisticated document/task tracking. Ad ***hoc*** **workflow** solutions, by contrast, support rapid definition and execution of less complex process models that may be used to facilitate the flow of a single document on a single occasion, or the flow of mainstream business documents on an ongoing basis. These products allow users to route electronic business forms as file attachments over existing e-mail systems.

8.4.2 Applications

All **workflow** tools run on Microsoft Windows desktops, although support for Macintosh, Unix and OS/2 environments is also widespread. Due to the market's client/server orientation, less than a handful of products run on mainframe or minicomputer operating systems. Finding the best **workflow** management systems involves considering such criteria as platforms, process-design tools, routable-object design tools and ease of use and administration.

---

[160] **Sorensen, Reed, "Can Your Process Benefit from Workflow Products?"** ***CrossTalk*****, February, 1996,** pp *5-7.*

Workflow can be expensive. Packaged software typically costs $3,500 a desktop, though prices range from as little as $300 to as much as $12,000. So, a workflow setup for 5,000 employees could easily cost $15 million. That's roughly the same amount a large company would pay for an enterprisewide software system, including installation costs.[161]

A full-page table of products, vendors, features, functions and prices is included in the *Network World Collaboration* article.[162] A representative sampling of workflow products can be found in *the* December 1995 issue of *Client/Server Computing,*[163] and the November/December 1995 issue of *Network World Collaboration* supplement.[164]

8.5 Document Management Systems

Growing interest in document management is fueled by the particular requirements of document-intensive industries, such as government, manufacturing and pharmaceutical development, whose ability to create and refer to documents is critical. It's also motivated by the ubiquitous need for maintaining an audit trail for projects since job turnover is at an all-time high. The final push in this direction is due to a subtle paradigm shift occurring today, a shift to the notion that documents no longer belong to their authors but are corporate assets created on behalf of a larger entity, the company.[165]

The crux of the document management problem is how administrators should maintain and update documents that are stored-in whole or in part-on various servers or end users' PCs. Relational database management systems @DBMS), optimized as they are to store rows and columns of data, are uniquely well-suited to the task of leading users to the documents they want and storing those files in an organized way. A document management product can be linked into a RDBMS via an application programming interface (API).

8.5.1 Document Sharing and Security

One hurdle organizations may have to jump over as they consider implementing a document management/database system is a sense that certain documents are the property of certain departments, or of individuals within the department. While departments within organizations often create documents specifically for their use, workers in other areas may have a business need to see those documents when joint projects are initiated.

"A lot of companies think each department has its own particular needs, and they don't need to look at other departments' documents, but that's not so," says Margaret Melisko, supervisor of infrastructure services at Arizona Public Service Co., Phoenix, AZ. "We want staff to think of

---

[161] Bartholomew, Doug, 'Workflow Software: A Better Way to Work," *Information Week,* 11 September 1995, pp 32-40.

[162] Kobielus, James, "The rhythm of work: A buyer's guide to workflow tools," *Network World Collaboration,* November/December, 1995, pp 13-18.

[163] Frye, Colleen, "Workflow Joins with Document Management, Imaging, Faxing and More," *Client/Server Computing*, December 1995, pp 60-61.

[164] Kobielus, James, pp 14-16.

[165] Rogers, Amy, "Merging Documents and Databases," Communications Week, 11 September 1995, p S27.

documents as corporate assets that have appropriate security and can be backed up on **a** regular basis, and people can share them. "

The thought of all networked users surfing through pages of corporate documentation sounds scary, but both RDBMS and document management software offer security to keep classified information off unauthorized viewers' screens.

8.5.2 Interoperability Issues

Four major developers of document management systems-IBM, Novell, Inc., Saros Corporation, and Xerox Corporation-agreed in April 1995 to merge their technologies and operations to form a single, independent organization to develop industry specifications to provide universal interoperability among all document management applications. The resulting organization, the Document Management Alliance @MA) was formed as a task force under the Association for Information and Image Management (AIIM) headquartered in Silver Spring, MD.

DMA will define an enterprise-wide document management specification for library services as well as a middleware layer specification to allow access and search for documents between different document management systems, flat file repositories, file servers and potentially any other defined document management service. The common API specification will provide the links for ensuring that the different programs can talk to one another. The object-based architecture will allow application developers to integrate library services on a modular basis.

Since its inception, DMA has attracted more than 60 members representing major software and hardware manufacturers and users. The initial draft of the DMA specification was to have been published during the third quarter of 1995, but is now scheduled for issuance the second quarter of 1996, according to Cheryl Chadwell of AIIM.[166]

'What the ultimate electronic document management system means is a system that allows us to manage electronic information at all levels of a company, whatever the document is, and wherever it is, and whenever you want it," said Craig Williams, CEO at Optical Image Network Group, Springfield, IL. "That's the whole point: Maintain everything-databases, communication, versioning, locking, security, the works. "

Some of the better-known document management systems products and their prime differentiator include: [167]

- Documentum's Enterprise Document Management System
  Virtual and compound document management
- Information Dimensions' Basis
  Security and control of documents
- Interleafs **RDM**

[166] Chadwell, Cheryl, Association for Information and Image Management, telephone interview by Jack Root, HQ AFC4A/Technology Insertion Office, Scott AFB, IL, 31 January 1996.
[167] *Kay,* Emily, "Order from *Chaos," InformationWeek,* 13 May 1996, p 68.

Automated publishing integration

- **Novasoft** Systems' **NovaManage**
  Ability to **customize**
- Novell's **SoftSolutions**
  Remote document server
- PC **Docs' Docs** Open
  Open architecture
- Saros Corporation's Mezzanine
  Remote user access

A "Document Management Buyers Guide, " providing information on 3 1 products by 22 manufacturers, was published in the 11 September 1995 edition of ***Communications Week.*** [168] ***The*** 11 September 1995 edition of ***InformationWeek*** lists nine vendors who sell **workflow** products. Prices ranged from $199 to $3,000 per **user.**[169]

A new venture between Wang Laboratories, Inc. and Microsoft Corporation, **OpenView,** an OLE-rich"' application to complement Windows 95, is expected soon.

8.5.3 Groupware Selection

Groupware that works with the document management package is the key to a company's internal communication, according to John Zyskowski, analyst at the Boston-based Patricia Seybold Group. Most document management packages can run within groupware-it's as close to a standard as the industry gets. You use groupware for distributing a final document; you use document management for changing it while leaving the all-important cybertrail of its different versions.

For each document in a document package, you have a profile that describes it-like a card catalog-including information such as document author name, client number and key words. According to Zyskowski, this profile usually is stored in a structured query language (SQL) server. It's not possible to take the entire document and import it into groupware. Essentially, you would end up with indices of the document management system files in your groupware.

"Document management is limited in terms of how many ways you can look at a database, which makes sense since it's intended for creating, changing and tracking, to database searching. That's where groupware steps in," Zyskowski says. 'But if the system doesn't embed into mainstream groupware packages, steer clear of it. "

It won't be long (perhaps only a couple of years by many analysts' reckonings) before you'll be able to pick up a phone and have a document delivered to the network and then be

---

[168] **Delmonico, Dayna and Oliver Rist, "And** *Now,* **Here Come** *the* **Players,"** ***Communications*** *Week* ***Interoperability*** **supplement, 11 September 1995, pp S42-S45.**
[169] **Bartholomew, Doug, 'A Better Way to Work,"** ***Information*** *Week,* **11 September 1995, p 40.**
[170] **Object linking and embedding.**

automatically indexed and routed, or have voice-activated faxing. This advancement will be a huge achievement and will completely alter the document management arena because it means users can get in and out of the system without having to be inside it. [171]

8.5.4 A Business Application

Document management is becoming a pervasive corporate issue-a solution-that can dramatically change an organization's overall effectiveness. The results at Bankers Trust Co., New York, NY, are proof that document management is one of the best ways to open up a corporation's hidden assets. The global bank is the seventh-largest bank in the United States, with operations in more than 40 countries. Not surprisingly, the bank's thousands of employees create a lot of documents, and over the years its IS managers have had considerable difficulty finding them.

In a typical scenario, a banker based in Los Angeles, CA, might be in New York on a new business pitch and needs to work on a document involving graphics, text, and spreadsheets. The document center-which works around the clock-would take the user's raw data, create the document and deliver it to the user. The problem, according to Kevin Vaughn, vice president and technology architect, was one of scale. "We would end up with literally thousands of documents that were managed by people who didn't know them conceptually and had no mental key of where they would find them."

Consequently, when the same user would ask for the document to be sent to, say, Chicago, finding the document became a Herculean task. "We would end up spending more than eight hours just looking for a document; the shift would change and we would continue looking for the document," Vaughn says. "Those searches were both extensive and expensive. " Often, the searches were fruitless, and the user would end up having someone recreate the document from scratch a second or third time, multiplying the expense of the process.

The answer for the bank was to install Saros Corporation's Mezzanine document management system on its global network which is primarily based on Novell, Inc.'s NetWare and Microsoft Corporation's Windows NT servers. The content-search capability of the software is probably the most frequently used, either alone or in combination with an attribute-search capability. "At this point we can find just about anything in less than 10 seconds," says Vaughn.

The cost for all this added efficiency was relatively modest compared with the return. Vaughn estimates the preliminary investment to be less than $100,000. "Eventually, we'll move to perhaps 14,000 seats in total, but it will take some time to get to that stage," he says. Even so, Vaughn expects payback in less than nine months.

The banker said document management in general is just coming of age. One piece-graphical searches-is not yet in place at the bank. In fact, the bank uses a separate FileNet system to

---

[171] Connor, Louis, 'Divide, Conquer and Digitize," *Communications Week Interoperability* supplement. I 1 September 1995, pp S7-S14.

manage images. It is hoped that ultimately the end user looking at a Saros screen also will be able to see a FileNet image, and it won't matter where the document or image resides. "We hope that we can get things to the point where the system sees it as being one document in one place with one storage metaphor, " Vaughn says. [172]

Despite the sophistication of the overall document system at the bank, Vaughn believes that there were little or no technical problems. He says there were issues on the non-technical side, however, specifically getting people to become more structured. The banker and other industry leaders are leading vendors down the path to solving their real-world business problems by bringing together workflow, imaging, document management and other technologies, all accessible from the desktop.

8.5.5 An Air Force Application

Paper is disappearing from the acquisition organization at Air Force Headquarters in the Pentagon. The Suspense Control and Tasking System (SCATS), a $5 million document management system promises to make all transactions electronic. Before SCATS, outside correspondence entered the Pentagon through the DoD mail room. Paper documents for the Air Force were directed to the service's administrative office, which distributed them. It often took weeks for documents to reach addressees. Some sat on people's desks waiting for approval, and some just got lost.

Now, documents are scanned and stored in a central server. "Any client on the Air Force network can access any document in the system. SCATS also lets several people simultaneously work on a document, eliminating extra copies and reducing filing space. "The ability to quickly put our fingers on the right document will save countless hours," predicted the Air Force's Henry Romo, assistant for computer technology and communications at headquarters. Early results are promising. "The automated system keeps the chain of command in the loop but gets (work) to the action officer's desktop immediately," said Glenn Grimes, a senior computer scientist with Analytic Services in Arlington, VA, the system's developer.

SCATS operates over an Ethernet network running Microsoft Corporation's Windows NT over TCP/IP. Other components include an SQL database, DocsOpen, and Watermark Enterprise Addition as the imaging software. The program Capture converts images to the portable document format. Scanners are from Fujitsu and include one that scans both sides of a document at 55 pages per minute, and a one-sided 25 ppm scanner. Current servers are multiprocessor Pentiums, but the Air Force has yet to decide on a headquarters platform. [173]

---

[172] Pepper, Jon, "Round the Clock Docs," *Communications Week Interoperability* supplement, 11 September 1995, p S17.

[173] Zurier, Steve and Judith Silver, 'Progress toward a paperless government," *Government Computer News*, 5 February 1996, p 37.

8.6 Conclusions

Workflow tools and document management systems have been used to varying degrees of success over the past few years. These technologies, when employed correctly, will help facilitate the flow of information within an organization in an efficient manner. The axiom that the process must be re-engineered holds particularly true with workflow and document management. The other key is being able to determine which organizational tasks lend themselves to workflow. Some of the first that come to mind include manufacturing, accounting, and distribution.

Tom Koulopoulos, president, Delphi Consulting Group, Inc., Boston, MA, said that soon customers will see the evolution of a business operating system that is both workflow and document management enabled. "Look at Lotus Notes; it's a flagship for IBM. Look where Microsoft is going with object-oriented technology. Look what Novell is doing with applets. The applications will become invisible. You'll end up with an intelligent desktop that spawns applications. The way you manage those pieces is with workflow. The way you manage information is with document management. Document management is the window to business objects. Workflow will manage the containers."[174]

Document management has been viewed as a solution to help organizations control the growing volume of documents across the enterprise. Emily Kay, *Information* Week, states, "Now the push is for greater data access through corporate intranets and greater control of process through workflow software. But even with these advances, few believe that document management will mean document reduction. These systems simply will serve to control an ever-growing volume of corporate information."

[174] Campbell, Ian, IDC, October 1995.

THIS PAGE INTENTIONALLY LEFT BLANK

9. Miscellaneous Topics

9.1 Standards

Functional standards ensure the interworking of multivendor products by formalizing a set of actions or defining the interactions between applications. Matching groupware applications to the varying needs of an organization is the key to long-term groupware success. Standards that foster the ability to mix and match groupware components will be the impetus for widespread groupware adoption.

To provide guidance on the use of standards and to promote interoperability, Headquarters Air Force established a set of Technical Reference Codes (TRCs) that will help project officers in specifying or procuring communications and computer systems. The TRCs, written and maintained by HQ AFC4A/TNBC, are a reference to applicable standards depending on the operational requirements of the systems being acquired. More information on TRCs can be found at the TRC home page: http://infosphere.safb.af.mil/~tnb/.

In addition to the inter-working of an application with different vendors products, users select an application by considering a number of other aspects such as functionality, cost, ease of use, document portability, and document integration. Organizations are most concerned with how the groupware products will enhance its business processes. The following briefly mentions some standards activities which affects various groupware categories.

The Workflow Management Coalition (WMC) and the Document Management Alliance @MA) are two major organizations handling document management standards. WMC is tasked with creating a standard to allow multiple workflow products to interoperate. DMA was formed to combine two industry technologies into a unified standard that defines all aspects of document management interaction.

The Microsoft Corporation's messaging application programming interfaces (MAPI), defining application interaction, will have a great impact on groupware. MAPI, an application portability interface vice a protocol, helps mix multivendor clients and servers. However, a proprietary piece of software is still needed on the client that links to the vendor's software.

Internet message access protocol 4 (IMAP4) was designed to give the end user a choice of accessing and manipulating remote mailboxes as if they were local or downloading messages to the client. Daniel Blum, a principal at Rapport Communication, states, "So if you're going to play musical computers between your laptop and desktop, your IMAP4 mailbox can live on the server. Or if you're setting off on a long trip and will only occasionally log on, your mailbox can live on the laptop. Even better, the IMAP4 protocol can support juicy features such as selective message downloading, shared folders, and access to multiple mailboxes."[175] While IMAP4 is picking up support from Sun Microsystems, Inc., Hewlett-Packard Company, Isis Corporation, and Isocor, IMAP4 support is absent from Lotus Development Corporation,

[175] Blum, Daniel, "IMAP gets on the messaging map," *Network World, 29* April 1996, p 50.

Microsoft Corporation, Novell, Inc., and Netscape Communications Corporation. Blum believes that more companies will include IMAP4 support as demand continues to increase from the customer base.

The ITU X.400 and X.500 suites, key components of DMS, are the major standards that promise compatibility among heterogeneous messaging systems. However, some of the new products do not access protocols that allow directory user agents and directory service agents to communicate which affects messaging strategy. Other Internet standards such as simple mail transfer protocol (SMTP), post office protocol (POP), and network news transport protocol (NNTP) are gaining the backing of companies like Netscape Communications Corporation. Michael J. Miller, editor-in-chief of PC *Magazine,* states that "Although we've yet to see these standards implemented successfully for messaging in large companies, at least SMTP and POP are open standards, and widespread adoption could eliminate troublesome gateways. "[176]

Because DoD is increasing reliance on the Internet and online services to provide messaging services, compatibility with external systems is just as important as backward compatibility with existing messaging systems. To provide external connectivity, Lotus, Microsoft, and Novell plan to support X.400 protocols over both LAN and transmission control protocol/internet protocol (TCP/IP) networks. Users will be able to configure any of these products to use X.400 as the internal backbone for routing messages between servers.

Microsoft, Novell, and Lotus will also provide gateways to SMTP. And, users will be able to attach files to SMTP messages using the multipurpose Internet mail extensions (MIME). X.400 and SMTP support allows exchanging mail with any messaging systems equipped with these gateways.

Section 6 (Conferencing) includes coverage of VTC standards.

9.2 Product Ease of Use and Training

Can the product be used after no more than three minutes of training? Many believe this is a good test for ease of use. According to a published vendor assessment model, if an IS manager cannot be productive with a groupware tool after a three-minute explanation by a sales representative, the average user may never feel comfortable with it.

While this type of litmus test may bode somewhat well for e-mail products, using advanced features of groupware products such as Lotus Notes and Microsoft Exchange can take considerably longer than three minutes to give a manager a real feel for the product. Bottom line-the advanced characteristics of this generation's set of groupware products means that individuals need appropriate training in order for the products to be used in a relatively easy-to-use fashion. Once the decision to migrate to a product like Notes has been made, implementation, including training, can begin.

---

[176] **Miller, Michael J., "Remember Groupware?"** *PC Magazine*, **28 May 1996, p 29.**

If an organization is going to perform a pilot, it is imperative to have an appropriate mix of individuals to include upper management, management information systems (MIS) personnel, users who are believed to have the most to gain by early migration, and selected champions from various departments. Once MIS personnel appear to be comfortable that the groupware product is up and running and custom databases are working properly, it is time to bring in the users. Remember, the pilot is meant to shake out the vast majority of problems before users get involved.

For a product such as Lotus Notes, it is a good idea to focus initially on a small set of well-designed Notes databases to get started. Bret Swedeen, contributor to the *LAN Interoperability* supplement, adds that these databases must address two issues to ensure success:

> They must be beneficial to the company and its management as well as users. For example, a weekly status report database might be useful for management because it will enable staff at this level to ensure that work is getting done in a timely manner. However, users filling out the reports may see the database as just another time-consuming, one-way task.
>
> A successful approach for this type of database is to require weekly feedback from the manager to the employee. This way, the user gets information that helps improve his or her work and also the satisfaction of knowing that that work isn't going unseen. Ensuring that these initial databases are well designed will probably require an outside Notes developer.[177]

After the core users have been trained, are starting to use the functionality, and believe the product will be beneficial within the organization, it is time to provide training for the rest of the potential users and continue installing the client software. It is imperative that all users, not just upper management, have access to support for basic groupware functionality as well as the customized databases. Either a help desk with dedicated support providers or outsourcing will be appropriate, as long as response times are reasonable.

Bottom line, the same training principals which apply to other activities within an organization apply to groupware as well. Any organization wants to ensure it maximizes its training budget by ensuring the needs of its users, to include upper management, are satisfied in an appropriate environment. Crimping on training opportunities for commonly used application software almost always costs the organization in the end.

Eric Goldreich, director of information systems at Sheppard Mullin, says the organization's usage of GroupWise increased significantly following a IO-hour mandatory training session was instituted. He added that there was considerable hesitancy in the firm surrendering the services of its lawyers for that time frame because the time was equivalent to about $2,500 of potential billable revenue for *each* lawyer being trained. According to Goldreich, the training

---

[177] **Swedeen, Bret, "Lotus Notes: Between the Lines," *LAN Interoperability* supplement, February 1996, p 12.**

provided huge dividends in the use of the scheduling function alone; as an example, imagine the difficulties in finding a single meeting time suitable for 10 attorneys. [178]

The Air Force C4 Agency converted from the DaVinci e-mail product to Novell GroupWise in December 1995. Everyone was offered a four-hour training session in November. Many were happy having an in-advance look at GroupWise and were sold on the additional integrated capabilities such as calendaring and scheduling which were not integrated in the DaVinci system. Unfortunately, some of the scheduled training sessions were hindered by the Federal Government layoffs of November and December 1995 and all makeup sessions had not been held as of publication date.

In addition to the basic four-hour session, an advanced session to help users refine their skills and cover advanced topics is needed. In the original four-hour training session, users focused on look-and-feel as well as basic GroupWise functionality. It was only after transitioning to GroupWise that users remembered techniques they used in DaVinci but didn't know if or how they could be accomplished in GroupWise. A good example is the "file draft" feature in DaVinci which is most handy if your e-mail is getting long, you have to attend to other matters, or if more thought is required. Therefore, if an organization expects to utilize more than just basic e-mail features, at least another higher level of training is needed.

Consideration should be given to breaking up training sessions so that different levels are not held consecutively. For example, schedule a half day for basics during week one, a half day for intermediate topics during week two, and a half day for advanced topics during week three. If at all possible, do not lump all three into a single day-and-one-half session. This will help prevent information overload and help ensure users can get back to their offices and put into practice techniques they learned before heading off to the next level of instruction.

9.3 costs

Next to ease of use, the second most critical area for groupware tools, either fully integrated or component based, is the cost. It's virtually an axiom that companies invariably underestimate migration and life-cycle costs. In some cases, the initial cost to purchase a groupware tool can be as little as 10% of the eventual cost to implement the tool throughout an organization. Significant factors contributing to the life-cycle costs include implementation, training, administrative, maintenance, and upgrade costs. Hardware upgrades and software costs dominate the first year's costs. Thereafter, upgrades, maintenance, administration, and other support form the chief ongoing costs of maintaining a groupware system.

To evaluate the return on investment possible from groupware it is necessary to ask:

- What is DoD guidance?
- What is the cost per desktop?
- What is the recommended desktop-to-server ratio?
- What is the cost per server?

---

[178] **Schlosberg, Jeremy, "Where is the Elusive Groupware Payoff?"** *Open Computing,* **September 1995, p 34.**

- What is the ratio of servers to administrators?
- What is the installation cost?
- What is the recurring cost?
- What is the training cost?
- Is there a training program in place?
- Are there auditing processes in place to track groupware use?

This listing will help give you the full equation. A representative sampling of groupware product information to include *product* prices, as compiled by International Data Corporation - Government, is in Appendix L.

9.4 Information Protection

Protection of information is every user's responsibility. For each user, operational security (OPSEC) is a personal requirement. Each user is responsible for the information he or she uses and produces. It is each user's responsibility to decide what protection is needed to ensure the information is accessible, its integrity is in tact, and only personnel with the need to know will be able to manipulate it as mission requires. The Multilevel Information Systems Security Initiative is the answer for meeting DoD requirements.

Appendix M contains DoD Directive C-5200.5, Para D, is the Communications Policy for the Department of Defense. For current items of interest within the information protection arena, see the latest issue of *The Connection*, a publication distributed by the Air Force C4 Agency.[179] Finally, check out {Safe2}, also available from the Air Force C4 Agency (see prior footnote for address). {Safe2} is an interactive, PC-based security education and awareness program consisting of tutorials and screen savers which educate and remind computer users of important, common-sense security issues.

9.5 Security Items of Interest for Groupware Users

Encryption has been the security method of choice throughout much of the industry. Microsoft Exchange 4.0, GroupWise XTD, and Lotus Notes 4.0 all use RSA public-key encryption, developed by Ronald Rivest, Adi Shamir, and L. Adleman at MIT in 1977. The message sender encrypts the message body and attachments, and recipients decrypt them using a private key. However, a limiting factor is that you can encrypt only messages to others using your mail system, not external services.

All three products also support digital signatures and access control. Digital signatures are based on RSA public-key cryptography, which lets recipients verify the sender's identity. Again, this feature is available only to others using the same package. Access control lets users and administrators determine who can access particular information, such as message headers and content. Notes 4.0 uses its own access-control system; Exchange and GroupWise XTD draw on controls in Windows NT and NetWare.

---

[179] *The Connection* is available from HQ AFC4A/SYSI, 203 W Losey St, Rm 2025, Scott AFB IL 622255234.

The excellent security features of Notes led to its large-scale use within the Central Intelligence Agency (CIA). At the 1995 Groupware '95 show in Boston, William Eisner, CIA deputy chief for systems development, stated that the CIA especially liked what it saw in Lotus' security technology, including its then-pioneering use of public-key encryption and access control lists for limiting who could see what. Eisner adds that the CIA took additional steps to make its Notes net even more secure.[180]

Security on the DMS will be handled through a credit card-sized Fortezza card, which will plug into a desktop PC card reader. Some users are looking for DMS vendors to supply security software encryption methodology that will be less expensive than a hardware solution.

And, there are some new products being developed. For instance, a PC card encryption product has been developed by PC Security Company, Denver, CO for laptop computers. It won't guarantee your laptop won't be lost or stolen, but it can ensure no one will be able to read the files on the computer.

'A lot of agencies are looking at the Fortezza card and seeing there's a missing link," said Dave Christensen, a PC Security Company spokesman. The company's Stoplock PCMCIA consists of a smart card and smart card reader plus access control software. The encryption keys themselves are encrypted under the user's password, making it almost impossible for a thief to crack.

To get in, the user must present a valid smart card and provide an ID and password. To work with the reader, the smart card must be validated by card administration software, which allocates and administers user IDs. Each user ID has a different code for file access, so two people can share a computer and never find each other's files.[181]

The government's determination to stem the worldwide spread of encryption technology has forced several software companies to make compromises in order to be able to export their products. Government officials said they need to limit the spread of data-scrambling technology to help them track criminals, terrorists and foreign military activities. But a coalition of industry groups and Internet boosters said the government's efforts hurt U.S. software sales and limit citizens' privacy.

Lotus Development Corporation recently agreed to share its data-scrambling secrets with the government in exchange for easier export of Notes 4.0. Under its pact with the government, Lotus can export its improved Notes 4.0 groupware software, which can encrypt data using improved 64-bit electronic keys-up 24 bits from the 40-bit keys allowed under current rules. The extra 24 bits ensure that data prepared with the Lotus software-such as a financial report or a contract bid-can be much better shielded from any electronic eavesdropper, such as a foreign government or a commercial spy.

---

[180] **Gaffin, Adam, "CIA espies value in turning to Lotus Notes,"** *Network World,* **13 March 1995, p 43.**
[181] **Finnegan, Lisa, "Stoplocked laptop won't blab secrets, even at gunpoint,"** *Government Computer News,* **5 February, 1996, p 30.**

For example, decrypting a message hidden by the 64-bit key would require perhaps 17 million times more computing power than needed to crack open a 40-bit key, said Peter Tippett, president of the National Computer Security Association, Carlisle, PA. To break a 64-bit key, "you're talking about thousands of years versus a couple of days," needed to break 40-bit keys, said Stephen Walker, president of Trusted Information Systems, Inc., Glenwood, MD. Many in the security industry believe the "thousands of years" scenario to be extremely optimistic.

In return for approval to export the improved 64-bit software, Lotus agreed to reveal to the U.S. government 24-bits of the 64-bit key included in each Notes 4.0 package that is exported. This "differential work factor cryptography" helps the U.S. government unscramble selected messages encrypted by Lotus' product, while giving customers greater protection against all other electronic eavesdroppers.

Microsoft Corp., Redmond, WA, decided to equip its software with a special slot for various companies' encryption products. The slot, dubbed the Crypto API, won't work unless the foreign or U.S. companies show Microsoft officials that they have permission from their national governments. This procedure allows Microsoft to sell software programs that can be modified to fit national encryption laws in countries such as Denmark, Russia, China, Israel, and France. Despite some acquiescence to the government's control of data-scrambling technology, the industry will still lobby for easier export rules, according to an industry spokesperson.[182]

[182] Munro, Neil, 'Lotus Breaks Cryptography Coalition," *Washington Technology, 25* January 1996, pp 1. 36.

THIS PAGE INTENTIONALLY LEFT BLANK

10. Recommendations/Conclusions

The groupware concept has been and will continue to be a winning concept for corporate America and DoD. Because there are so many products that fit within and around the overall groupware concept, it is imperative that requirements are articulated and true product capabilities are identified. This will help ensure that an organization achieves the functionality it really needs.

Once an organization believes it needs additional groupware functionality, efforts must be made to sell the concept to managers, users, and the information systems department. Once all believe the product will make collaboration easier, people will be far more serious at paying attention (let alone merely attending) training sessions and using the product once it's implemented in the organization. The age-old dictum of upper management support being critical applies to groupware as well.

A well thought out corporate training strategy for new groupware products is essential. It is imperative to ensure the product is virtually bug free prior to throwing it to the masses within an organization . For complex products like Lotus Notes and Microsoft Exchange, ensure training is conducted in incremental steps in different time frames to help prevent information overload. Again, the training package must be robust and focused to the needs of the ultimate users. While it may be relatively easy to stumble through menus while performing electronic messaging, it certainly is not inherently easy to run packages like GroupWise, Notes, and Exchange to their fullest capabilities.

The Defense Messaging System is a DoD mandate for messaging interoperability, meaning AUTODIN and other less functional messaging systems will no longer be used within DoD. For those procuring any message-based systems, it is imperative to go with vendors who either have DMS-compliant products on hand or who have, in writing, given their commitment and outlined their strategy to provide DMS-compliant products.

Wherever possible, migrate from file-based messaging systems to client-server messaging systems because fewer servers are necessary and users can expect far better service.

Companies invariably underestimate migration and life-cycle costs. The cost of the groupware package may only be 10% of the life-cycle cost. While hardware upgrades and software costs dominate the first year's costs, upgrades, maintenance, administration, and other support form the chief out-year costs of maintaining a groupware system.

Lotus Notes 4.0 continues to broaden its base within industry with its replication abilities, its security features, and its availability. Notes is highly acclaimed with the exception that it can be slow at times. However, if you need a good document manager or document-based groupware application, this is the best choice. Microsoft's first entry into the broader groupware market, Exchange 4.0, is a message-based platform. Novell's next entry, GroupWise XTD, is expected 3Q96. These three are very different products. Understand

your needs and take thorough test drives before making a final decision. Consult DMS and groupware policy and ensure products selected for procurement are complaint.

Desktop video teleconferencing (VTC) products and standards are proliferating. In addition to major drops in price, bandwidth is becoming less expensive and compression algorithms are more efficient. Desktop VTC is proving to be a formidable application in helping to reduce travel costs while sharing information and collaborating in a geographically separated environment. The Army has a Desktop VTC contract; however, if an organization is worried about interoperability among various WAN-based and ISDN-based systems, it is imperative to conduct interoperability testing. Document and audio conferencing are great complements to a desktop VTC package and provide a great way to talk and share information in a real-time environment. Desktop VTC will increasingly be used for interviews in conjunction with the assignment process.

Archival considerations are frequently overlooked. The National Archives and Records Administration looks for documents and artifacts to be usable for at least 100 years. Should ASCII be the default? If so, perhaps hypertext markup language (HTML) is an excellent de *facto* standard. To put things into perspective, how easy is it to retrieve documents written in the initial version of Word Star, stored on an 8-inch floppy diskette, and using CPM as the operating system? And that's been only 15 years ago!

Absolutely take advantage of intranet capabilities. Internal Web servers are being implemented at rates about three times as frequently as external Web servers. Intranets allow the working force, customers, and trading partners to be able to get access to valuable information more quickly; this ultimately means better productivity and performance. An intranet helps any department that could benefit from communicating faster, easier, and cheaper with people, particularly those who are geographically separated. Documents that are prepared using conventional desktop applications are converted to Web pages with commonly available conversion programs and are then loaded into the Web server.

Intranet usage will continue to grow over the next few years as more organizations understand the merits of using the intranet and they become more proficient in its potential. IS managers clearly see intranet activity as the first phase in the development of broader electronic commerce that will proliferate over the next five years. Just as the backbone, the Internet, continues to evolve, applications such as the intranet will become more robust and valuable as well. Network security to rival that of proprietary networks may be an end-of-the-century event. The intranet should not be seen as a Lotus Notes killer; it should be seen as a complementary groupware tool. Notes' niche is its strong document database capabilities which the intranet can't touch at present.

Workflow tools and document management systems have been in use for years. They are particularly valuable after business processes have been re-engineered and help track the flow of information throughout an organization. It is imperative to understand which processes are repeatable procedures and which are not likely to occur more than once.

Although many are **skeptical** about benefit claims, most organizations that have incorporated groupware functionality are happy with the end results. It must be remembered that groupware frequently changes the way an organization communicates; thus, an organization's culture must be understood before attempting to migrate to groupware products. Again, match the products' functionality with the organization's needs to **maximize** benefits and desired goals. Migration to more powerful groupware products, assuming an organization has the requirements, is imperative.

THIS PAGE INTENTIONALLY LEFT BLANK

Appendix A: Various Groupware Definitions

Historical:

Intentional group processes plus the software to support them.
Johnson-Lenz, Peter and Trudy (circa 1978 according to ***Computing Canada),*** "Groupware: An Overview, " ***Datapro Computer Systems Analyst,*** August 1995.

Not only the forms or processes we use to shape our interactions, but the capacity to create, shape, and change forms as appropriate.
Johnson-Lenz, Peter and Trudy (their updated definition), "Groupware: An Overview, " ***Datapro Computer Systems Analyst,*** August 1995.

Co-evolving human-tool system.
Englebart, Doug (called the father of groupware; definition cira 1988), "Groupware: An Overview," ***Datapro Computer Systems Analyst,*** August 1995.

Current:

Software that helps groups of people to work together more productively.
FitzGerald, Jerry, and Alan Dennis, ***Business Data Communications and Networking,*** fifth edition, John Wiley & Sons, Inc., 1996, p 34.

The integrated use of networked application software to allow shared access to files needed for group communication, joint planning, joint decision making, and other collaborative efforts.
Vargo, John, and Ray Hunt, ***Telecommunications in Business: Strategy and Application,*** Irwin, 1996, p 286.

Computer software that supports groups of people engaged in a common task and that provides an interface to a shared environment.
Groupware: Myths and Realities, Creative Networks, Inc., 1995, p 1 - 1.

The technology used by workgroups to process and share information, track each other's movements, and even conduct meetings.
"Groupware: An Overview, " ***Datapro Computer Systems Analyst,*** August 1995.

Consists of applications that reside on top of a stack of hardware, software, and communications layers and help individuals work in teams, also termed workgroups.
IDC Government, 1995

An umbrella term for the technologies that support person-to-person collaboration. It can be anything from e-mail to electronic meeting systems (EMS) to workflow. Provides tools to solve "collaboration-oriented" business problems.

Coleman, David, An Overview *of Groupware*, Prentice-Hall, 1995. (http://www.collabra.com/articles/overview.htm)

Technology for teams. The full set of capabilities (not just the technology part) required to enable teams to produce exceptional business change.

Ryan, Hugh and Michael Davis, consultants in the New Age Architectures group at Andersen Consulting, "Selling Groupware in Your Organization, " ***Virtual Workgroups,*** March-April 1996, pp 47-48.

Software that lets organizations realize the full potential of their people and networks, enabling teams to meet goals faster.

Thompson, M. Keith, "All Together Now: Six Groupware Solutions," ***Computer Shopper,*** March 1995, p 524.

LAN-grounded business software that lets people participate in joint apps and/or projects. Though these "group" applications can entail many technologies, shared databases, and application subsets, they always unite three modes of overall group-styled work: communication, collaboration, and coordination.

"Computer Telephony and Groupware's '3 ***Cs,"' Computer Telephony,*** March 1996, p 46.

Appendix B: Bibliography

Adhikari, Richard, "Users' Votes *Go to Notes," Client/Server Computing,* January 1995, pp *48-53.*

Alsop, Stewart, "Notes 4.0 is too complex, and it's got me singing the cross-platform blues," *InfoWorld, 12* February 1996, p 102.

Army DVTC Indefinite Delivery/Indefinite Quantity (ID/IQ) Buyer's Guide @ISA approved), TRW Space & Electronics Group, Avionics Systems Division, Official U.S. Government ID/IQ Contract Number: DAAB07-95-D-L264, revision C, October 1995.

Bartholomew, Doug, "A Better Way to Work," *InformationWeek,* 11 September 1995, p *32-40.*

Baum, David, 'Groupware: Is It Notes or Nothing," *Datamation,* May 1995, pp 45-48.

Bickel, Robert, "Building Intranets," *Internet World,* March 1996, pp 72-76.

Blum, Daniel, "IMAP gets on the messaging map," *Network World, 29* April 1996, p 50.

Bower, 2d Lt Albert, HQ AF C4 Agency, "Bullet Background Paper on LAN Agency Business Practices," 26 March 1996.

Boyle, Padraic, "Network Firewalls: Your Defensive Line," *PC Magazine Network Edition,* 12 March 1996, pp NE4-NE13.

Brown, Dave, "Bytes, Camera, Action!" *Network Computing,* 1 March 1996, pp 46-55.

Bruno, Lee, "Groupware vs. Webware," *Data Communications,* March 1996, p 123.

Campbell, Ian, "Standards Affecting Groupware," *Infovision International* (P1139), October 1995, pp l-3.

Camey, Dan, "C-Phone helps Target Technologies make fed inroads," *Federal Computer Week, 22* January 1996, p 36.

Carr, Jim, "Intranets deliver," *InfoWorld,* 19 February 1996, pp 61-64.

Castleman, Deborah R., "Videoteleconferencing (VTC) Standards Guidance," memorandum, ASD (C3I), 31 October 1994.

Chandra, Neal, 'The New Age of Collaboration, " ***Telecommunications,*** January 1996, pp **58-**59.

Coleman, David, "Collaboration on the Internet-Can Traditional Groupware Survive?" ***Virtural Workgroups,*** March-April 1996, pp 1**1-** 13.

Coleman, David, ***Groupware: Technology and Applications,*** Prentice Hall, 1995.

Coleman, David, "Technology Can Make Meetings More Productive," ***Virtual Workgroups,*** March-April 1996, pp 38-43.

"Computer Telephony and Groupware's ***'3 Cs,'" Computer Telephony,*** pp 46-86.

Connor, Louis, "Divide, Conquer and **Digitize,"** ***Communications Week Interoperability*** supplement, 11 September 1995, pp **S7-S14.**

Constance, Paul, **"DMS** is facing revolt by its intended users," ***Government Computer News,*** 15 April 1996, pp **1, 52.**

Constance, Paul, **"DMS** product delays threaten July rollout," ***Government Computer News,*** 19 February 1996, pp 1, 55.

Constance, Paul, **"GIs** demand compleat field gear: boots, rifle, e-mail," ***Government Computer*** News, 29 April 1996, p 8.

Cooney, Michael, 'IBM to give its dumb terminals Web smarts," ***Network World,*** pp 1, 64.

Cooney, Robert, "The DMS Infrastructure," ***Chips,*** January 1996.

Cortese, Amy, "Here Comes the Intranet," ***Business Week,*** 26 February 1996, pp 76-84.

Cummings, Joanne, "New Tools for Collaboration Emerge in the Public Network," ***Telecommunications,*** December 1995, pp 25-27.

Davis, Jessica, "AT&T to drop Network Notes for Internet," ***InfoWorld, 4*** March 1996, p 18.

Defense Message System-Air Force: Transition Plan, HQ Standard Systems Group, Maxwell AFB Gunter Annex, Alabama, 1 April 1995.

"Defense Message System: Global Solutions for Secure Messaging, Answers to Common Questions," DMS/AF PMO, MAFB-Gunter Annex, **http://w3.af.mil/DMS/quest/faq.html,** 20 November 1995.

"Defense Message System (DMS): More About DMS," **http://www.itsi.disa.mil/dms/dms.html,** 17 October 1995.

Defense Message System (DMS) Target Architecture and Implementation Strategy (TAIS), Appendix: DMS in the Tactical Environment, draft, prepared by Validity Corporation under contract No. 92-C-6416, task order 279, for **DISA/JIEO,** 2 January 1996.

Deloria, Wayne, **"DMS:** The Journey from Here to the Desktop," ***Chips,*** January 1996.

Desmond, Michael, "Video Conferencing: Coast to Coast and Face to Face," PC ***World,*** March 1995, pp 177-186.

DMS-Air Force Implementation Planning Working Group, briefing slides, 26-28 January 1996.

Dragoon, Alice, "Notes Versus the Web: **Open** to Debate," ***CIO,*** 1 March 1996, pp 42-52.

Duval, Brian, "LAN-based E-mail ***use*** swells," ***InfoWorld, 26*** February 1996, p 61.

Elliott, Elaine X., **"GroupWise** XTD: Better Late ***Than*** Never," ***Computer Shopper,*** June 1996, p 540.

Elliott, Elaine X., "Collaborate Computing, " ***Computer Shopper,*** June 1996, pp 534-546.

Ferranti, Marc and Barb Cole, "Lotus to help rivals replicate?" ***Network World,*** 22 April 1996, p 1, 63.

Finnegan, Lisa, "Stoplocked laptop won't blab secrets, even at gunpoint," ***Govemmenr Computer News, 5*** February, 1996, p 30.

FitzGerald, Jerry **(FitzGerald** and Associates) and Alan Dennis (University of Georgia), ***Business Data Communications and Networking,*** fifth edition, John Wiley **&** Sons, Inc., 1996.

Frye, Colleen, "Workflow Joins with Document Management, Imaging, Faxing, and More," ***Client/Server Computing,*** December 1995, pp 57-63.

Gaffin, Adam, 'CIA espies value in turning to Lotus Notes," ***Network World,*** 13 March 1995, p 43.

Gallagher, Sean, 'Exchange Versus Notes, " ***InformationWeek, 4*** March 1996, pp 66-73.

Gallagher, Sean, "High Marks for Notes 4.0," ***InformationWeek, 22*** January 1996, pp 75-76.

Gerber, ***Barry,*** 'Novell ***XTD:*** Message to the Wise," ***Network Computing,*** 15 January 1996, **p 44.**

Goldstone, Jerry, "Welcome to *Virtual Workgroups,"* *virtual Workgroups,* March-April 1996, p 2.

Grant, Paul (ASD(C3I)) and Anne M. Tall (Booz-Allen & Hamilton, Inc.), "Department of Defense E-Mail Policy and Government-Wide E-Mail Initiatives, " http://www.itsi.disa.mil/dms/pgrant.html, 10 August 1995.

Greenberg, Ilan, "It's all in the Process," *InfoWorld, 4* March 1996, pp 59-60.

Grigonis, Richard, "Polycom's ShowStation Document Conferencing Projector, " *Computer Telephony,* June 1995.

Groupware Issues and Opinions: Survey of IT Managers, IDCG Pub. No. W 1857, International Data Corporation, March 1995.

Groupware: Myths and Realities, Creative Networks, Inc., 1995.

Grygo, Eugene M., "Data Integration Tools Give Notes Safe Passage to the Enterprise, " *Client/Server Computing,* November 1995, pp 97- 115.

Grygo, Eugene M., "Intranet Reality Check," *Client/Server Computing,* May 1996, pp 22-32.

Hamilton, Anita, "Kinko's Copy Shops Offer Video," *PC World,* March 1995, p 180.

Held, Jeff, 'Collaboratus: Justifying the groupware investment," *Network World Collaboration* supplement, November/December 1995, p 26.

Held, Jeff, "Collaboratus: Why doesn't Microsoft understand groupware?" *Network World Collaboration* supplement, March/April 1996, p 30.

Horwitt, Elisabeth, "Make Your Move," *Network World, 22* January 1996, pp 44-50.

Implementation Guidance for DMS X.500 Directory Services, 11 March 1996, draft prepared for the Defense Information Systems Agency DMS Program Management Office.

"International Data Corporation projects more than 5 million Microsoft Exchange users by the end of 1996," *Business wire, 2* April 1996.

"Intranets: Technologies, Tools, and Strategies," *Network World* technical seminars advertisement, *Network World,* 11 March 1996, p 40.

Industry Profile for Video Teleconferencing, VTC001-Rev. 1, Corporation for Open Systems International, 25 April 1996.

Jackson, Neal F., Milam W. Aiken, Mahesh B. Vanjani, and Bassam S. Hasan, "Support Group Decisions via Computer Systems," *Qualify Progress,* vol 28, no 5, May 1995, p 77.

Karon, Paul, "Intranet solution makes Geffen shake, rattle, and roll," *InfoWorld,* 12 February 1996, p 65.

Kay, Emily, "Order from Chaos," *Information Week, 13* May 1996, pp 65-73.

Kobielus, James, "The rhythm of work: A buyer's guide to workflow tools," *Nenvork World Collaboration* supplement, November/December 1995, pp 12- 18.

Kranz, Mary Ellen, and Valerie I. Sessa, "Meeting Makeovers," *PC Magazine,* 14 June 1994, pp 207-212.

Landry, John, "It All Adds Up to Communications," *Reseller Management,* January 1996, pp 26-28.

Laube, Sheldon, 'Network Says Your Burrito's Done," *Reseller Management,* January 1996, pp 26-28.

Levitt, Lee, "The 'Intranet'," *Reseller Management,* January 1996, pp 91-94.

Liebmann, Lenny, "Chart Your Game Plan," *Communications Week, 5* February 1996, pp 43-46.

"Lotus Notes release 4 wins multiple industry awards, builds momentum as industry standard for the enterprise and interenterprise," *PR Newswire,* 29 April 1996.

Marshall, Martin, "AT&T's 'Inferno' to Span Networks," *Communications Week,* 13 May 1996, p 4.

Marshall, Patrick, "Notes 4.0 is mightily improved," *InfoWorld, 22* January 1996, p 93.

Masud, Sam, "DMS email gets set to *go* global," *Government Computer News,* 13 November 1995, p 35.

Masud, Sam, "Novel will have a DMS version of GroupWise this summer," *Government Computer* News, 15 April 1996, p 52.

Masud, Sam, "Troop information goes on line, avoids battlefield mud," *Government Computer News,* 19 February 1996, p 8.

McCoy, E. R., Jr., "Getting the Picture, " *Beyond Computing,* March 1996, pp 42-45.

Messmer, Ellen, "Libraries buy books using ED1 over the Web, " ***Network World,*** 11 March 1996, p 37.

Miller, Michael J., "Remember Groupware?" ***PC Magazine, 28*** May 1996, p 29.

Millikin, Michael, "Practical Advice for Implementing Corporate Intranets," ***Telecommunications,*** March 1996, pp 34-37.

Mills, **Elinor,** "Networld **+Interop:** Lotus, Novell Gain from Exchange Delays," IDG News Service, San Mateo Bureau, 4 April 1996.

Molta, Dave, "Videoconferencing: The Better to See You With," ***Network Computing,*** 15 March 1996, pp 114-l 19.

Munro, Neil, "Lotus Breaks Cryptography Coalition," ***Washington Technology,*** 25 January 1996, pp 1, 36.

Musthaler, Linda, "Effective teamwork virtually guaranteed, " ***Network World Collaboration*** supplement, November/December 1995, pp **10-** 11.

Myers-Tiemey, Linda, "Workgroup Application Systems, " ***International Data Corporation Fax Flash,*** August 1995.

O'Hara, Colleen, "Messaging movement sweeps across federal agencies," ***Federal Computer Week, 22*** January 1996, pp 32-33

Olsen, Florence, 'Certified Notes 4.0 to come with pluses," ***Government Computer News,*** 8 January 1996, p 51.

Olsen, Florence, "Negotiators haggle in Notes," ***Government Computer*** News, 15 April 1996, pp 31-34.

O'Malley, Chris, "Videoconferencing: The Big Picture," ***Computer Shopper,*** April 1996, pp 160-167.

O'Malley, Chris, "Talking Heads," ***PC Computing,*** December 1994, pp 222-244.

Paige, Emmett, Jr., "Electronic Messaging Policy - Implementation Guidance, " Memorandum for Secretaries of the Military Departments, Under Secretaries of Defense, Assistant Secretaries of Defense, Directors of the Defense Agencies, and Director, Joint Staff, 9 March 1995.

Perey, Christine, "Desktop Videoconferencing and Collaboration Systems, " ***Virtual Workgroups,*** March/April 1996, p 21-31.

Pescatore, John, 'Update to Groupware Product Info," e-mail to Maj d c Brashares (HQ AFC4A), IDC-Government, 4 March 1996.

Pescatore, John and Tamara Paulson, 'Groupware," Research Activity #8960, IDC Government, 15 December 1995.

Pilla, Louis J., "Industry Profile for Video Teleconferencing, " memorandum, DISA/JIEO, 30 May 1995.

Plain, Stephen W., and Thomas Mace, "Building the Intranet, Block by Block," ***PC Magazine,*** 12 March 1996, pp 231-237.

"Polycom Debuts Document Conferencing Solution," ***Enterprise Communications,*** June 1995.

'Polycom's Showstation Document Conferencing Projector, " ***Teleconnect,*** June 1995.

Pompili, Tony, "Notes 4 Goes from Ugly Duckling to ***Swan, " PC Magazine,*** 12 March 1996, pp 39-41.

Poulsen, JO2 Trevor, "Antarctic sailors get morale boost," ***Base News,*** 16 February 1996, p 18.

Radosevich, Lynda, "Oh, What a Relief It Is!" ***Computerworld,*** 31 July 1995, p 78.

Rodriguez, Karen, and Jeffrey Schwartz, "Rival Standards Cause Insecurity," ***Communications Week,*** 13 May 1996, p 1, 12.

Rowe, Gary J. and Daniel J. Blum, "The Great Replication Debate," ***Network World Collaboration*** supplement, March/April 1996, p 6.

Schlosberg, Jeremy, "Where is the Elusive Groupware Payoff?" ***Open Computing,*** September 1995, pp 31-36.

Schrage, Michael, ***No More Teams! Mastering the Dynamics*** *of* ***Creative Collaboration,*** Doubleday Currency, 1995.

Schrage, Michael, panelist, "Futurists' Panel: The Yellow Brick Road," ***CIO,*** 15 December 1995/1 January 1996, p 46.

Schultz, Beth, "Collaboration by Design," ***Network World Collaboration*** supplement, January-February 1996, pp 22-24.

Schwartz, Jeffrey, "E-Mail via the Internet," ***Communications Week, 26*** February 1996, pp 1, 9, 12.

Schwartz, Jeffrey, "GM Taps Notes 4 for E-Mail & Groupware," ***Communications Week,*** **8 January 1996, p** 1.

Schwartz, Jeffrey, "Lotus Leads in E-Mail Deployment, " ***Communications Week,*** 8 January 1996, p 15.

Schwartz, Jeffrey, "Lotus Preps SMTP-based Mail Offering," ***Communications Week,*** 6 May 1996, pp 1, 81.

Schwartz, Jeffrey, "Lotus Tenders Upgrade of Public Notes," ***Communications Week,*** 5 February 1996, p 25.

Silver, Judith, "Stamps of approval go to Novell, ***Banyan," Government Computer News,*** 4 March 1996, p 16.

Simons, John, "Weaving a new web," ***U.S. News & World Report,*** 11 March 1996, pp 54-55.

Snyder, Joel, "The Dating Game," ***Network World Collaboration*** supplement, March/April 1996, pp 21-23.

Snyder, Joel, **"Groupware:** Colonizing New Ground for Industrious Networks," ***Network Computing,*** 15 March 1996, pp 47-64.

Snyder, Joel, "Roadblocks to E-mail convergence, " ***Network World Collaboration*** supplement, November-December 1995, pp 23-24.

Sonnenberg, Staff Sergeant Gerald, "One of a kind aircraft serves unique mission," ***intercom,*** October 1995, p 5.

Sorensen, Reed, "Can Your Process Benefit from **Workflow** Products?" ***CrossTalk,*** February 1996, pp 5-7.

Stahl, Stephanie and John Swenson, "Groupware Grows Up," ***InformationWeek,*** 4 March 1996, pp 14-15.

Stahl, Stephanie, "Sharing the Workload," ***Information Week,*** 1 January 1996, pp 18-22.

Strom, David, "Managing a Web of a mess," ***InfoWorld,*** 11 December 1995, pp 75-78.

Sullivan, **Kristina** B, "Step up to the whiteboard, please," ***PC Week/Netweek,*** pp N/3-N/5.

Swedeen, Bret, "Lotus Notes: Between the Lines," ***LAN Interoperability*** supplement, February 1996, pp 6-14.

Symoens, Jeffrey, "Notes ***4.0," Federal Computer Week, 8*** January 1996, pp **S12-S16.**

T. 120: A Primer on the T. I20 Series Standard, DataBeam Corporation, 1995.

Tackett, Ram, 'Videoconferencing: Is the pain worth the gain?" ***Network World Collaboration*** supplement, November/December 1995, pp 6-8.

Theophano, Rochelle, "Groupware: An Overview," McGraw-Hill, Inc., Datapro Information Services Group, August 1995, pp l-6.

Thompson, M. Keith, 'All Together Now," ***Computer Shopper,*** March 1995, pp 524-529.

Thyfault, Mary E., "The Intranet Rolls In," ***InformationWeek, 29*** January 1996, pp 15, 76-77.

Trammell, Kelly, "Under Construction," ***Byte,*** August 1995, pp 93-101.

Toler, Lt Col Phil, "DMS: Order Processing Information," ***Chips,*** January 1996.

Trowbridge,, Dave, "Will the Web Mulch Lotus into Compost?" ***Computer Technology Review,*** September 1995, pp 1, 13, 17.

Trowbridge, Dave, "World Wide Web Getting Ready to Conquer Groupware," ***Computer Technology Review,*** November 1995, p 1.

Turrell, Mark, 'Learning through experience how companies are really using groupware," ***City University Business*** School, June 1995, pp 353-368.

Vargo, John and Ray Hunt, ***Telecommunications in Business: Strategy and Application,*** Irwin, 1996.

Varon, Elana, "Firms tout Web as workflow solution," ***Federal Computer Week,*** 15 April 1996, pp 1, 41.

Vaughan-Nichols, Steven J., "Lotus Notes 4 is like a daisy-now you love it, now you don't," ***Government Computer News, 8*** January 1996, p 1.

"Videoconferencing contract refitted with new products for current PCs," ***Government Computer News, 5*** February 1996, pp 31-32.

Welch, Douglas, "Wanted: ***Good,*** cheap Web space," ***Network World Collaboration*** supplement, November/December 1995, pp 20-2 1.

Welch, Douglas E., "The Inside Advantage, " ***LAN Interoperability*** supplement, February 1996, pp 23-26.

Wexler, Joanie, "Network Notes is dead," ***Network World, 4*** March 1996, pp 1, 69.

"Widespread Connectivity," chart, ***Communications Week,*** 19 June 1995.

Williamson, Mickey, "Getting a Grip on Groupware," ***CIO,*** 1 March 1996, pp 32-40.

Wong, William, "XTD: The New GroupWise," ***Communications Week, 26*** February 1996, p 55.

Zurier, Steve and Judith Silver, "Progress toward a paperless government," ***Government Computer News, 5*** February 1996, p 37.

Appendix C: World-Wide Web Sites of Interest

This list is provided for those who wish to conduct further research into groupware via the Web. These sites were found to be active and relevant as of the publication date. With the dynamism shown by the Web over the past two years, the listed sites are barely the tip of the ice berg. Feel free to e-mail the authors other groupware-related Universal Resource Locators **(URLs)** you uncover. In addition, numerous Web search tools are referenced at the end of this appendix for your use.

Publications:

http://www.chips.navy.mil/chips/archives/96_jan/contents.htm
Chips monthly magazine. The January 1996 issue of this Navy publication for small computer users focuses on DMS.

http://www.cio.com/CIO
CIO bimonthly magazine.

http://www.commweek.com
Communications Week weekly newspaper.

http://www.fcw.com
Federal Computer Week weekly newspaper.

http://www.cahners.com/gcn
Government Computer News weekly newspaper.

http://www.iworld.com
Internet World, published by Mecklermedia Corporation.

http://www.lanmag.com
LAN: The Network Solutions Magazine monthly magazine.

http://www.nwfusion.com
Network World weekly newspaper (e-mail: nwnews@nww.com).

http://www.bcr.com
Virtual Workgroups bimonthly magazine; (800) **227-** 1234.

http://techweb.cmp.com
Access to: ***InformationWeek, Communications Week,*** and many others.

http://www.zdnet.com
Access to about 15 Ziff-Davis Publishing Company publications ***including PC Magazine, PC Week,*** and ***Mac User.***

Government and military:

http://infosphere.safb.af.mil/~horizon/tnaa/tech_ins.htm
AF C4 Agency's **homepage** with technology insertion pointer.

http://infosphere.safb.af.mil/~jwid/vtc/vtc2.htm
HQ **AFC4A/SYN** is the lead for the Video Teleconferencing Implementer's Guide.

http://infosphere.safb.af.mil/~tnb/
HQ **AFC4A/TNB:** Air Force Technical Reference Codes which outline standards for every aspect of Air Force communications.

http://stsc.hill.af.mil
Software Technology Support Center, Hill AFB, UT. Focuses on technology adoption.

http://www.itsi.disa.mil
DISA Center for Standards Information Technology Standards Integrated Web Server; to retrieve ***the Industry Profile for Video Teleconferencing,*** click on "Standards Document Library," then "By standards organization, " then "COS. "

http://www.itsi.disa.mil/dmshome.html
DISA DMS Home Page.

http://w3.af.mil/DMS
DMS/AF Program Management Office, Maxwell AFB-Gunter Annex.

http://www.chips.navy.mil/dms/index.html
Defense Messaging System (DMS) Information; maintained by the editors of the Navy's ***Chips*** magazine, this page will contain news and information about the DMS program and the Contract Line Items available to DMS users.

Academic:

http://www.cba.uga.edu/groupware/telecom/home.html
Business Data Communications and Networking, by Jerry **FitzGerald** and Alan Dennis.

http://www.crew.umich.edu/~brinck/cscw.html
Tom Brink's **Groupware/CSCW** page: various links on Computer Supported Collaborative Work.

http://cu-seeme.cornell.edu/
CU-SeeMe: low cost/low bandwidth Internet videoconferencing from Cornell University.

http://www-leland.stanford.edu/group/SLOW/
Stanford Learning **Organization** Web: information technologies and organization learning.

http://fiddle.ee.vt.edu/succeed/videoconf.html
SUCCEED: **DT5//** Deliverable Team **#5:** Introduction to Desktop Video Conferencing.

http://fiddle.ee.vt.edu/succeed/groupware.html
SUCCEED: **DT5//** Deliverable Team **#5:** Introduction to Groupware.

http://hulk.bu.edu/
The Multimedia Communications Laboratory at Boston University.

http://mango.genie.uottawa.ca/
Multimedia Communications Research Laboratory at the University of Ottawa, Department of Electrical Engineering.

Organizations:

http://www.aiim.org/dma
Association for Information and Image Management's Document Management Alliance, Silver Spring, MD; (301) 587-8202.

http://www.bamta.org
BAMTA, a non-profit alliance of companies, non-profit institutions, and government agencies founded in 1995, **specializes** in collaborative opportunities.

http://www.csn.net:80/imtc
International Multimedia Teleconferencing Consortium, Inc. : nonprofit corporation founded to promote the creation and adoption of international standards for mutipoint document conferencing and videoconferencing.

http://www.itu.ch
International Telecommunications Union (ITU), Geneva, Switzerland: International standards on VTC and other **telecomunications** issues.

http://www.itca.org
International Teleconferencing Association Home Page.

http://www.bitscout.com/faqtoc.htm
Videoconferencing Frequently Asked Questions, co-edited by Charles E. Hendricks and Jonathan P. Steer.

Commercial:

http://www.att.com
AT&T: links to a plethora of products all over the collaborative computing market. In particular, check **/worldworx/** and **/Telecommute_America/**.

http://www.bitscout.com
Bitscout Software: a VTC software development company.

http://www.bittco.com
Bittco Solutions: real-time Internet teleconferencing and decision support.

http://www.bonzi.com
Bonzi Software **(Paso** Robles, CA): introduced Voice E-Mail software that permits voice messages to be sent over the Internet.

http://www.brookwood.com
Brookwood Media Arts.

http://www.collaborate.com
Collaborative Strategies (San Francisco, CA): consulting firm focused on groupware and Workgroup computing, run by David Coleman, editor of ***Virtual Workgroups*** (inaugural issue-March-April 1996).

http://www.collabra.com
Collabra: creators of **CollabraShare** group conferencing (Collabra now falls under **Netscape** Communications Corporation); (800) 474-7427.

http://www.collabra.com/groupwar/index.htm
Groupware Central: various links to articles on groupware, maintained by Collabra Software, Inc.

http://www.DataFellows.com
DataFellows: makers of Vineyard, visual information manager for workgroups.

http://www.documentum.com
Documenturn, Inc.: makers of Enterprise Document Management System; (5 10) 463-6800

http://www.synergymktg.com/groupworks.html
FTP Software, Inc.: makers of **GroupWorks,** a collaborative solution for teams; (800) 284-8018.

http://www.hello-direct.com
Hello Direct: sells various teleconferencing products in its catalog of telephone productivity tools.

http://www.idi.oclc.org
Information Dimensions: makers of Basis, a document management system; (800) 328-2648.

http://www.insoft.com/Main.html
InSoft, Inc.: makers of Desktop VTC products.

http://www.intel.com
Intel Corporation: makers of **ProShare** Conferencing Video System 200; (800) 538-3373.

http://www.interleaf.com
Interleaf, Inc.: makers of a document management system; (800) 955-5323.

http://www.idcresearch.com
International Data Corporation.

http://www.kinkos.com
Kinko's provides video teleconferencing facilities at many of its locations.

http://world.std.com/lo
The Learning Organization: this site allows people to enter into a virtual dialog about collaborative work; based on the works of Peter Senge ***(The Fifth Discipline).***

http://www.dms.loral.com
Loral Federal Systems Group: Defense Message System information.

http://www.lotus.com/govweb
Lotus Development Corporation; (800) 828-7086.

http://www.microsoft.com/Exchange/exchdata.htm
Microsoft Corporation: Microsoft Exchange home page; (800) 426-9400.

http://www.videoconferencing.com
Mosaic Information Technologies: makers of video conferencing products and services (not associated with the Mosaic Web browser).

http://www.novasoft.com
Novasoft Systems: makers of **NovaManage,** a document management system; (800) 4346682.

http://netwire.novell.com/ServSupp/groupware/nwgindx.htm
Novell Groupware: makers of **GroupWise, InForms,** and **SoftSolutions;** (800) 638-9273.

http://www.pcdocs.com
PC **Docs,** Inc. : makers of **Docs** Open, a document management system; (617) 273-3800.

http://www.picturetel.com
PictureTel Corporation: makers of Videoconferencing Systems; (800) 7 166000.

http://www.polycom.com
Polycom, Inc. : audio and document conferencing products.

http://www.picturephone.com/
PicturePhone Direct (video conferencing hardware).

http://www.prenhall.com/list/wnlist.html
Prentice-Hall: latest releases from the publishers of many groupware-related books.

http://www.rsisystems.com
RSI Systems: makers of ERIS Visual Communication Systems; (612) 896-3020.

http://saros.com
Saros Corporation: makers of the Mezzanine document management software; (206) 6461066.

http://www.setnet.com
SetNet Corporation, Miami, FL (shipping Internet e-mail client software); (800) 893-5865.

http://www.sourcecom.com
Sourcecom Corporation: makers of **InRoute** Broadband Access Router for broadband Internet and intranet access; (805) 294-0555.

http://www.teamw.com
TeamWARE Office: e-mail, conferencing, scheduling, document management, and task routing.

http://www.ventana.com
Ventana Corporation: makers of **GroupSystems** software which enables group collaboration for rapid and efficient decision making; **info@ventana.com.**

http://www.vtel.com/ ***or*** **http://www.timetool.com**
VTEL Video and Mediaconferencing: (formerly Peirce-Phelps) makers of VTEL 227LC and **EnterpriseSeries** Personal Collaborator; (800) **299-VTEL.**

http://www.xerox.com/liveworks.html
LiveWorks, Inc., (a Xerox company): producers of **LiveBoard,** a solution for interactive collaboration; (800) 200-l 167 or (408) 324-2200.

http://www.wpine.com
White Pine Software, Nashua, NH (check this home page for a free beta version of the revamped **CU-SeeMe** VTC product for the Internet).

Selected Intranet Tool Vendors:

http://www.bluestone.com
Bluestone; (609) 727-4600.

http://www.everywhere.com
EveryWare Development Corporation (Macintosh server solutions); (905) 819-l 173.

http://www.haht.com
HAHT Software; (919) 821-1280.

http://www.oracle.com
Oracle Corporation (for Oracle databases); (415) 506-7000.

http://www.w3spider.com
Spider Technologies; (415) 969-7149.

WWW Server Common Gateway Interface (CGI)-based Application Tips:

http://www.w3.**org/hypertext/WWW/MarkUp/MarkUp.**html
HTML specifications from the WWW Consortium.

http://www.w3.org/hypertext/WWW/Clients.html
HTML Browser List.

http://www.w3.org/hypertext/WWW/Protocols/HTTP/HTTP2.html
Basic HTTP.

http://www.proper.com/www/servers-chart.html
WWW server comparison chart.

http://hoohoo.ncsa.uiuc.edu/docs/cgi/overview.html
Introduction to CGI.

http://www.best.com/~hedlund/cgi-faq
CGI programmer's reference.

http://www3.ncsa.edu/bae/people/faculty/walker/hotlist/forms.html
CGI forms primer.

Web Search Tools:

http://www.altavista.digital.com
Digital Equipment Corporation's new Alta Vista site provides not only a fast index to WWW documents, but also a real-time index of postings to thousands of Usenet conferences-handy if you're at the end of a slow Usenet link.

http://www.infoseek.com
A commercial index-and-search engine.

http://lycos.cs.cmu.edu
Carnegie Mellon University's Lycos index-and-search engine.

http://www.search.com
A service of c/net, the computer network. This service points to numerous search engines including: Alta Vista, AT&T business 800 numbers, Excite, Infoseek Guide, Magellan, sharewarecorn, and Yahoo.

http://www.wais.com
WAIS, Inc. server providing search capabilities.

http://webcrawler.com
University of Washington's WebCrawler index-and-search engine.

http://search.yahoo.com/bin/search?p=groupware

Yahoo: search results for the query “groupware. ”

THIS PAGE INTENTIONALLY LEFT BLANK

Appendix D: DMS Management, Technical, and Tactical Objectives

Specific management and technical objectives include:[1]

- Reduce operating and acquisition costs of Base Telecommunication Centers (TCCs) without degrading current message service.
- Implement writer-to-reader message service.
- Automate then eliminate TCCs. Reduce the volume then eliminate the use of AUTODIN and thus, eliminate the TCCs.
- Implement all new requirements for data transmission on DISN instead of AUTODIN.
- Implement the 1988 or later X.400/X.500 standards.
- Capitalize on the availability of desktop and small, multi-user computers.
- Employ DoD-standard hardware/software as major components.
- Implement Multilevel Information Systems Security Initiative (MISSI) security components.
- Implement network management and security features with centralized DISN network management/security systems.
- Use state-of-the-art commercial-off-the-shelf (COTS) technology to the maximum extent practical.

DMS tactical requirements are as follows:[2]

- Phase out the Automatic Digital Network (AUTODIN).
- Support the Command, Control, Communication, Computers, and Intelligence for the Warrior (C4IFTW) concept.
- Improve tactical/mobile messaging services.
- Integrate strategic and tactical/mobile messaging.

---

[1] *Defense Message System-Air Force: Transition Plan,* **HQ Standard Systems Group, Maxwell AFB Gunter Annex, Alabama, 1 April 1995, pp 1-2, l-3.**

[2] *Defense Message System (DMS) Target Architecture and Implementation Strategy (TAIS), Appendix: DMS in the Tactical Environment,* **draft, prepared by Validity Corporation under contract No. 92-C-6416, task order 279, for DISA/JIEO, 2 January 1996, p D-2.**

THIS PAGE INTENTIONALLY LEFT BLANK

Appendix E: Initial Operational Test and Evaluation (IOT&E) Sites for DMS Products[3]

Location	Service/Agency
Service Agency Sites	
Barksdale AFB, LA	Air Force
Fort Huachuca, AZ	Army
Pearl Harbor, HI	Navy
Quantico, VA	Marine Corps
Coronado, CA	Marine Corps
Isaac Newton Square Bldg., Washington, D.C.	DISA
Columbus, OH	DLA
Fairfax, VA	DMA
Patch Barracks, Germany	Europe
Control Centers	
Wahliwa, HI (Local Control Center)	Navy
San Diego, CA (Local Control Center)	Marine Corps
Wheeler, HI (Region Control Center)	Pacific
Patch Barracks, Germany (Region Control Center)	Europe
others TBD (Region Control Center)	CONUS
MISS1 Support to Control Centers	
Finksburg, MD	NSA
Pilot Sites-Gain operational experience for RCC	
Maxwell AFB, Gunter Annex, AL	Air Force
others TBD	
Operational Test Evaluators	
Kirtland, NM	AFOTEC
Norfolk, VA	Navy
Arlington, VA	Army
Fort Huachuca, AZ	DISA
Cheltenham, MD	DISA
Fort Belvoir, VA	DLA

[3] DMS-Air Force Implementation Planning Working Group, briefing slides, 26-28 January 1996.

THISPAGEINTENTIONALLYLEFI'BLANK

Appendix F: Videoconferencing Cost Justification

Investigate Before You Invest

Is videoconferencing right for ***your*** company? This appendix, provided by VTEL Video and Mediaconferencing, (800) 299-VTEL, includes a simple quiz and a fairly comprehensive worksheet to help you out. It's important to fill out ***both*** parts of the questionnaire. These worksheets will help you crystallize your thoughts and should prevent costly errors.

Part I: Questions about your organization

Circle the answer that most closely describes your way of doing business.

1. Do members of your organization need to meet face-to-face with co-workers or customers in distant locations? If so, how frequently do these meetings occur?

   [A. Monthly] [B. Weekly] [C. Daily]

2. Percentage of workforce that needs face-to-face communication in remote locations.

   [A. <5%] [B. 5-10%] [C. > 10%]

3. When someone in your company travels to a distant location, what is the ***typical*** trip length?

   [A. Primarily day trips] [B. 50% day trips/50% overnight trips] [C. Primarily overnight trips]

4. What changes have you seen in corporate travel costs over the past year?

   [A. No increase] [B. ncreased < 10%] [C. Increased > 10%]

5. Making a major decision in your organization requires the concurrence of people working in how many different locations?

   [A. 1] [B. 2 or 3] [C. 4 or more]

6. If you are too busy to attend a meeting and send another individual, how confidant are you that they report all the necessary information?

   [A. Very confident] [B. Reasonably confident] [C. Not confident]

7. Is your product development timeline

   [A. Faster than competitors' timelines?] [B. About the same?] [C. Slower than

competitor?]

8. Is your company downsizing, demanding more productivity of remaining employees? If so, how is your company downsizing, demanding more productivity of remaining employees? If so, how much has the average workload increased?

   [A. **< 10%]** [B. **10-20%]** [C. **>20%]**

9. Is your company expanding, how many new offices do you expect to add in the coming year?

   [A. l-23 **[B. 3-5]** [C. **>5]**

10. During the next 12 months, what percentage of your company's business will be done in the international marketplace?

    [A. **<5%]** [B. **5-10%]** [C. **> 10%]**

11. If your company is developing a "virtual corporation, " is forming strategic alliances or is involved in partnering, how many days on average are your employees now working away from the office?

    [A. l-2 days a month] [B. One day a week] [C. More than one day a week]

12. Answer this question ***only*** if your company has faced a "crisis management" situation within the past two years. How do you think it was handled?

    [A. It went about as well as could have been expected.] [B. If we had it to do over, there are some things I would change.] [C. It was a disaster.]

Scoring:

Tally your score according to the following point system:

A= 1 point, B = 2 points, C = 3 points.

If your score is 19 or higher, you'll want to go on to Part II. If your score is 15-18, you may be a candidate for videoconferencing but should take your time investigating. **In either case,** you should ask a videoconferencing systems integrator to do a more thorough needs analysis before you start investing money.

Part II: Business Case Worksheet - Explanation of Categories and Formulas

Meeting Costs

A. The number of meetings held during the course of a year.

B. The number of meetings held during the course of a year which could be displaced by videoconferencing, generally 20-50 **%** .

C. Estimate the overall, average meeting length. Videoconferences tend to be 20% to 30% shorter than face-to-face meetings.

D. Estimate the overall, average number of attendees at a meeting. Videoconferences range from to 20 in size, but the average is 4.

E. The number of meeting attendees who travel, usually about 50%.

F. Based on an overall annual remuneration of $60,000 (including bonuses) for the average attendee, a 30% overhead for benefits, and 1900 hours worked per year -- the average hourly compensation is $60 per hour.

G. Multiply number of meetings by meeting length by average number of attendees by average wage per hour **(BxCxDxF).**

Travel Costs

H. The total trips between the two sites being analyzed. (Number of travelers x number of meetings **BxE).**

I. Total travel costs including ground travel (personal mileage, rental car, taxi), airfare, meals, and lodging.

J. Multiply number of roundtrips by the average cost per roundtrip **(HxI).**

Lost Productivity Costs

K. The average length of time it takes a traveler to travel to and from the remote site.

L. The inverse of the time a traveler is actively pursing work-related activities while traveling. If a traveler works 50% of the time, the traveler is non-productive 50% of the time.

M. Same as average attendee wage (E).

N. Total trips between the two sites being analyzed (G).

0 . Multiply average travel time by percent non-productive travel time by average traveler wage per hour by number of roundtrips **(KxLxMxN).**

Videoconferencing Costs

P. Multiply number of meetings displaced by the videoconferencing meeting length.

Q. Based on average facility/equipment costs of $100,000; a 50% utilization factor (4 hours per day); with capital costs amortized over 5 years (includes accepted depreciation standards-the cost per hour of one videoconferencing room is about $20 per hour)(2 rooms are required).

R. Average cost per hour of usage is $100.

S. Add equipment/facility costs and transmission costs (Q+R).

Total Costs

T. Add annual meeting costs, annual travel costs and the cost of non-productive time (G+J+O).

U. Add annual meeting costs and annual videoconference costs (G+S).

V. Subtract the cost of videoconferencing meetings from the cost of displaced conventional meetings (T-U).

Please note that a complete business case should not only assess the quantitative dollar costs of travel and time, but also look at the benefits of videoconferencing that are more difficult to quantify such as improved communications and enhanced business opportunities.

For example:
- more interface at all levels of management
- better customer service
- faster decision making
- competitive advantage
- faster access to information
- immediate information exchange
- ready access to experts
- time-share in-demand talent

Needs Assessment Worksheet

Use this Needs Assessment Worksheet to compare videoconferencing costs to those of conventional, in-person meetings. Sample data for a medium size corporation is included. Get a blank copy by accessing **the** Web at **http://www.timetool.com/needs.htm.**

MEETING COSTS	CONVENTIONAL MEETING	VIDEOCONFERENCE
A. Number of meetings per year involving travel	600	
B. Number of meetings that could be videoconferenced (usually 50% of A)	300	300
C. Meeting length in hours (videoconferencing tends to be 20% shorter than face-to-face meeting)	2.5	2
D. Average number of attendees for your company (average is 4)	4	4
E. Number of attendees who travel (usually 50% of D)	2	0
F. Average hourly wage of attendees (salary + benefits/1900 hours)	$40	$40
G. Annual meetings costs (B x C x D x F)	$120,000	$96,000
TRAVEL COSTS		
H. Number of round trips (B x E)	600	
I. Average cost per round trip (total travel costs including ground, airfare, meals and lodging)	$1,100	
J. Annual travel costs (H X I)	$660,000	
LOST PRODUCTIVITY COSTS		
K. Average travel time in hours (time to travel to and from remote site)	6	
L. % of non-productive time while traveling	50%	
M. Average traveler wage/hour (F)	$40	
N. Number of round trips (H)	600	
O. Lost productivity costs (K x L x M x N)	$72,000	
VIDEOCONFERENCING COSTS		
P. Hours of videoconferencing (B x C)		600
Q. Equipment/facility costs (P x $20 average cost per hour x 2 rooms)		$24,000
R. Transmission costs (P x $100 average cost per hour)		$60,000
S. Videoconference costs (Q + R)		$84,000
TOTAL COSTS		
T. Costs conventional meetings (G + J + O)	$852,000	
U. Costs videoconferencing (G + S)		$120,000
V. Net savings with videoconferencing (T - U)		$732,000

THIS PAGE INTENTIONALLY LEFT BLANK

Appendix G: HQ AF C4 Agency VTC Activities

The Air Force C4 Agency uses the basic definition of video teleconferencing (VTC), a.k.a. video conferencing, as communicating in a face-to-face environment while physically separated. Agency personnel are trying to use VTC to increase productivity and efficiency in our current era of doing more with less. Major Agency activity includes looking at interoperability among vendors. The Agency will publish a test report on the evaluation of VTC systems, to include roll-abouts, studio codecs, and desktop systems, in secure and non-secure modes. In addition, the Agency is evaluating different types of encryption devices, like the KIV-7 and the KG-194 and several different vendor's MCUs (multi-point control units).

Furthermore, the evaluators are concerned with interoperability among networks. Therefore, in addition to equipment running over the public switched network, the Agency is also looking at the Internet as a means for propagating video. Several new standards have been released in the last six months related to video conferencing. The Agency is closely observing the following standards to see what types of commercial products evolve:

- H.323 standard for the LAN
- H.324 standard for the public switched network
- T.120 standard for document conferencing.

This set of activities will be completed during late FY96.

The Agency is also designing a migration path for these two different types of networks to converge onto an asynchronous transfer mode (ATM) network.

The AFC4A C4 Technology Validation Office (Barksdale AFB) tasked HQ AFC4A/TN to provide video teleconferencing (VTC) on a local area network (LAN) to meet the war-fighter's goal of effective communication. The 8th AF, at Barksdale AFB, wants the operational capabilities of real time VTC. There is a requirement that military commanders and support personnel receive/transmit information from/to their assets in real time for decision making. VTC over a LAN shows promise in meeting the requirement of efficiently and reliably communicating command and control information. The greatest benefit is the increased effectiveness and productivity. VTC is an effective means of communication because users can share documents and coordinate with all parties involved in a single conference. Productivity also increases because users are able to resolve details immediately, thus eliminating current deficiencies such as unproductive time spent traveling, telephone tag, costly TDYs, and the paper pushing.

The VTC requirement serves two purposes for AFC4A/TN. First, it would aid in the already ongoing desktop VTC test initiative to validate commercial-off-the-shelf products. Secondly, this equipment will be integrated into the ATM testbed as an application of ATM networking. Each of these initiatives will continue throughout FY96.

When the Agency evaluates commercial products, they are judged on a broad set of criteria. The Agency's efforts are being coordinated through the AF C4I Interoperability Steering Group whose charter includes exploring and testing new technologies which may have potential use and provide cost savings to the AF and DoD. Desktop VTC is a new technology which has come into prominence and has many promising benefits beyond traditional studio VTC. The Agency is conducting a test effort to evaluate various solutions and determine the state of the technology. The following are examples of the requirements and test objectives that would be needed in a delivered VTC system. These objectives include (but are not limited to) determine:

- Ease of use: How difficult is it to install and use?
- Quality of service: Is the picture quality useable?
- Additional features: Does it have document sharing, messaging, etc.?
- Multipoint features: How many parties can be in a conference?
- Error tolerance: What error rates can the system tolerate?
- Physical and electrical characteristics: What is the system's physical size, electrical connections, network connections needed?

For further information on these and other activities within the realm of VTC, please contact:

name:	Mr. Brad Piotrowski	1st Lt Fred Taylor
phone:	(618) 256-3720	(618) 256-3720
fax:	(618) 256-8952	(618) 256-8952
e-mail:	piotrows@afc4a.safb.af.mil	taylorfh@afc4a.safb.af.mil

Appendix H: CGX-based Application Tips

The following tips, provided by Robert Bickel, ***Internet World***, are especially useful for those preparing to move past the prototype stage when using Common Gateway Interface **(CGI)**-based tools for developing Web applications.'

- Separate the HTML user interface from the application and database logic.
  Many initial Web developers have made a classic software development mistake by simply hard coding their CGI scripts into their HTML documents. This means that simple changes in one place may affect hundreds of other pages, with no clear way of managing the update.

- Develop open applications.
  While there may be some features of the latest browser you like, make sure not to hard code to a specific browser or server. There will be many changes and advances over the coming years, and the more you can insulate your applications from those changes, the better.

  Best advice: Structure your application logic separately from HTML. Then make sure your HTML can address many savers and browsers. If you *want* to take advantage of certain features, there are relatively simple ways to handle optional HTML that might, for example, show a table when users have a **Netscape** browser but a list when they do not.

- Holding state.
  The Web is a "stateless" environment. This means that as an application, you have no control over users and what they **will** do next. They may branch off to another page unconnected with your application and may or may not come back to your application. If your program logic is counting on closure from the user, you may never get it.

  Rest advice: Do not count on holding state at the server. The browser is the best place, which means embedding a key (encrypted if necessary) into the client. **Netscape** provides a mechanism called 'cookies" to do this.

- Real applications deserve real tools.
  Web application development is no different than traditional application development in many ways. There is still a need for tools like code management so multiple people on a project can work together, for debugging tools, and for production-level database **design** and modeling tools. Look for Web development tools and methodologies that leverage what you may already be doing.

---

[4] **Bickel, 74.**

THIS PAGE INTENTIONALLY LEFT BLANK

Appendix I: Nine Steps to Intranet Success

1. **Read** all you can about the Internet so that you can talk about the latest events with confidence and full knowledge.
2. Get on relevant mailing lists (Internet Marketing, HTML Authors Guild, Windows NT) and listen to the experts talk about the technologies and business issues. Most of the active participants will be willing to help you out-if you are courteous and share your particular expertise with them.
3. Find professional, committed vendor partners with the resources and infrastructure to help you be successful.
4. Put up your own Web server announcing your corporate presence on the Internet.
5. Deploy an Intranet Web server for your own company. Gain experience in re-engineering information flow.
6. Attend training classes on a variety of Internet and Web-server products and development activities.
7. Map out an Internet business strategy. What applications will you target? Which vendors will you partner with? What expertise do you need in-house?
8. Start a direct-mail campaign to announce your presence and expertise in this market.
9. Launch a seminar series, targeting existing customers and new prospects. Help your customers to sort the hype from the real opportunities. They will thank you for the information-with **RFPs** and orders.

The above list was published in the January 1996 issue of ***Reseller Management***.[5]

[5] **Levitt, Lee, 'The Intranet: Groupware's Next Frontier,"** *Reseller Management,* **January 1996, p 94.**

THIS PAGE INTENTIONALLY LEFT BLANK

Appendix J: Software Technology Support Center's Process Workflow Workshop

The Software Technology Support Center is offering a six-hour workshop on process workflow. The workshop, provided on a fee-for-service basis to DoD agencies and their supporting contractors, is designed to bring all participants to a common level of understanding regarding:

- Workflow technology and related technologies.
- Selection of tools and systems integrators.
- The benefits of adopting workflow technology in a software development organization.

The workshop is performed at your location and can be scheduled as needed depending on the availability of the presenters.

Who is the intended audience? Any software development organization considering automating their process workflow. At the conclusion of the workshop, participants will be able to understand:

- How workflow relates to key process areas of the Capability Maturity Model.
- How to use workflow automation to facilitate movement up the Capability Maturity Model.
- Areas to consider in defining your workflow requirements.
- The importance of teaming with an integrator.
- Steps to take to gain user support and overcome resistance to change.
- An approach to adoption that provides long-term benefits to the organization.

This workshop provides the basic understanding an organization needs to begin adoption of workflow technology. Management, users, and persons who will eventually provide the in-house technical support will benefit by attending.

For further information, contact:

Mr. Reed Sorensen
Software Technology Support Center
Ogden ALC/TISE
7278 Fourth Street
Hill AFB, UT 840565205
Voice: (801) 775-5555 ext. 3049; DSN prefix: 775
Fax: (801) 774-7996
E-mail: sorenser@software.hill.af.mil

THIS PAGE INTENTIONALLY LEFT BLANK

Appendix K: On Overview of the Report, *Groupware: Myths and Realities*

Groupware: Myths and Realities was published by Creative Networks, Inc., an independent consulting firm in Palo Alto, CA, that provides publications and consulting services in the collaborative computing industry.

The soft-cover report, ***Groupware: Myths and Realities,*** is a compilation of findings from in-depth interviews conducted by Creative Networks' personnel with information systems and information technology (IS/IT) personnel at large corporations in North America.

Answers were sought to several key questions:

- What are the applications for which groupware is used?
- What are the business problems that organizations hoped to solve when they initially implemented groupware?
- What are the benefits that these companies have realized and what problems have they experienced?
- What are organizations' attitudes about the groupware products they now have?

For the report, Creative Networks adopted a broad definition of groupware:

> Computer software that supports groups of people engaged in a common task and that provides an interface to a shared environment.

Further, groupware is ***software*** that permits collaboration/coordination, information sharing and communication. Collaborative computing is the ***technology*** that permits these activities to take place.

The study states that organizations that do not implement groupware will be at a strategic disadvantage because they need the capabilities that groupware provides. Organizations that have implemented groupware are finding that groupware is becoming increasingly more important to their daily business activities.

It was also discovered that groupware users often impeded the implementation or growth of groupware use by resisting the change in work habits or practices that groupware often imposes upon them. This is because people are being called upon to change the way that they work.

Even though organizations are satisfied with the overall benefits of having groupware, they are unable to precisely specify the benefits they have received or to objectively measure the benefits that groupware provides. In addition, survey findings showed that organizations are generally pleased with groupware because it helps to make them more productive or in some way helps them to enable their business strategy. However, many of the specific features and

attributes of groupware that are used on a day-to-day basis have fallen short of users' expectations.

The report recommends that vendors not oversell their products; get user input when designing groupware products; focus on interoperability with other groupware products and existing applications; design development tools that will permit organizations to create useful line-of-business applications; make groupware tools scaleable to the enterprise level; and provide cross-platform capability for the major operating environments in use today: Windows NT, Unix and OS/2.

Case studies of five organizations and the groupware they use are featured in the publication. Each study presents the applications of the specific groupware within the company, problems of implementation and overall assessments of the products. Organizations included:

- Weyerhaeuser Mortgage Company using Novell GroupWise.
- Worldwide semiconductor manufacturing firm using Lotus Notes.
- Oregon State University, College of Business using Microsoft Mail.
- Large computer peripherals manufacturer using Lotus Notes.
- Large electronics and avionics manufacturer using Microsystems Software CaLANdar.

The study concludes with comprehensive directories of vendors for the various groupware product categories: calendaring/scheduling, conferencing and BBS, document management, electronic forms, e-mail, integrated groupware, and workflow automation. Interestingly, there were only three e-mail addresses listed in the table of more than 80 vendors of e-mail products.

The report is available for $495 from:

Creative Networks, Inc.
480 Lytton Avenue, Suite 6
Palo Alto, CA 94301

tel: (415) 326-9926
fax: (415) 326-4014
e-mail: 6539247@MCImail.com.

Appendix L: A Compendium of Various Groupware Products

The bulk of the following information was obtained from International Data Corporation-Government in December 1995. Updates for Lotus Notes 4.0, Microsoft Exchange Server 4.0, and Novell GroupWise XTD were acquired in May 1996. It is presented as a *guide* to product availability, their features, and estimated costs. Since groupware is such a dynamic industry, please contact the vendor to get the latest information on product updates and costs. The products are categorized as: groupware products, desktop video conferencing packages, and whiteboard products.

Groupware Products

Attachmate Corp.
3617 131st Ave., SE
Bellevue, WA 98006
Phone: l-800-678-6283

OpenMind (list price $195 per client; $995 per server) is groupware that allows companies to set up a collaborative workspace combining group conferencing, document management and electronic publishing. Provides a communications platform for group communications, collaboration and publishing of all types of information. Enables businesses to implement a consistent way of collecting, accessing and controlling information and setting up an easily accessible knowledge base. Includes an integrated Web browser and an e-mail gateway. With the Web browser, Web home pages can be assigned to program sections, thereby providing users with seamless access to the Web. With the e-mail gateway, program content can be exposed to any corporate e-mail user. Operations are based on a pull model of information flow as opposed to the push model. With the pull model, information is centrally located and accessible to multiple people when they need it as well as managed from a central location. Users can post information to an appropriate program section, making that information available to anyone with access to that section. Users can collect feedback on the information, collaborate on it and make the collaboration effort available to everyone.

Compatible with: Windows NT
RAM required: 4 MB (client); 16 MB (server)
Disk storage required: 8 MB (client); 30 MB (server)
Network compatibility: Novell; Banyan; TCP/IP; NetBIOS; AppleTalk; IPX/SPX; NetBEUI

Campbell Services, Inc.
21700 Northwestern Hwy., Ste. 1070, 10th Fl.
Southfield, MI 48075
Phone: 1-800-559-5955

OnTime Enterprise for NetWare (list price $994 -10 users and up) is a group scheduling program integrated with Novell NetWare. OnTime services are implemented as NetWare Loadable Modules. Uses the NetWare Directory Services in NetWare 4.0. Users scheduling a meeting can receive attendees' most up-todate calendars. As soon as users enter meeting requests, the program notifies attendees, updates their calendars, and blocks the times unless attendees decline the invitation. Meeting originators receive responses on their OnTime calendars when attendees RSVP to meeting requests. Supports e-mail packages, such as Beyond Mail, cc:Mail, and Microsoft Mail through NetWare MHS, VIM, and MAPI.

Compatible with: PC-MS/DOS
RAM required: 1 MB
Disk storage required: 1 MB
Additional hardware/software required: Novell NetWare
Customer support: phone support; tech support via BBS; tech support via on-line access; tech support via fax

OnTime for Networks (list price $356 and up -3-user, Windows version; $297 and up -3-user, DOS version) is a lifetime calendar, to-do list manager and reminder system. Used to plan time, remember critical dates and events, and follow up on unresolved matters and delegated tasks. Provides group scheduling. A reconciliation feature keeps remote and traveling users' calendars in sync with the main group scheduling calendar.

Calendar features include a week-at-a-glance screen to provide an overview of any week and a day planner screen which displays days in increments of one hour, 30 minutes or 15 minutes. A quick look-up feature is based on any keyword or the **name** of the person with whom the user has an appointment. Users can toggle between appointments and the to-do list. The to-do list manager automatically rolls over the list until items are marked as completed. List items can be archived as a permanent record. Up to 30 categories are provided for list and reminder organization.

Dates can be entered on the lifetime calendar through the year 2079. Recurring events are supported on a daily, weekly, biweekly, monthly, quarterly and yearly basis. The program provides calendar printouts for up to nine weeks. An alarm function alerts users to appointments; users can be in another application and still receive an alarm by running the program memory resident.

Compatible with: Windows 3.X; PC-MS/DOS
RAM required: 2 MB (Windows); 520 KB (DOS)
Disk storage required: 6.2 MB
Network compatibility: Novell NetWare; Banyan; 3Com; LAN Manager; PC-LAN; LANtastic; Windows for Workgroups
Customer support: tech support via BBS; tech support via on-line access; phone/fax support

CE Software, Inc. (subsidiary of CE Software Holdings, Inc.) PO Box 65580, 1801 Industrial Circle West Des Moines, IA 502656558 Phone: l-800-523-7638	**TimeVision Network Scheduler** (list price $495 **-5-user;** $895 **-10-user;** $6,259 **-100-user)** is server-based groupware that provides complete group calendaring and scheduling solution for Workgroup, department or enterprise. Navigates personal/group calendars using color-coded, tab-style layout. Contains personal time management tools. Sorts personal **to-do** lists by priority. Includes administration module for Windows which enables network administrator to define unlimited number of calendars for commonly-scheduled resources. Supports Windows and DOS clients. Compatible with: PC-MS/DOS Additional hardware/software required: Novell NetWare; **Artisoft LANtastic,** Digital Pathworks, **3Com,** Banyan VINES, IBM LAN Server or Microsoft LAN Manager

Collabra Software, Inc.
1091 N. Shoreline Blvd.
Mountain View, CA 94043
Phone: 1-800-474-7427

Collabra Share Enterprise Extensions (list price $895) is an electronic forum that allows users to organize, discuss and disseminate group information using existing applications and network infrastructure. Enables a Workgroup to organize projects into forums where everyone can find, view and discuss project information. Features information outline, navigation aids and full-text search. Anyone connected to the forum directly or through e-mail can contribute, respond, query and retrieve information. Intelligent agents can automatically capture information from news services or link forums to critical data from within the company. Supports major messaging standards, including Microsoft Mail and Lotus cc:Mail.

Compatible with: Windows 3.X
RAM required: 4 MB
Disk storage required: 10 MB
Additional hardware/software required: Windows 3.X
Network compatibility: Novell; Banyan; Windows for Workgroups
Customer support: free phone support; tech support via on-line access
Site licensing is available
Note: Collabra was recently acquired by Netscape

Collabra Share Workgroup Edition (list price $70 per user $795 -10-user; $6,995 -lOO-user) is an electronic forum that allows users to organize, discuss and disseminate group information using existing applications and network infrastructure. Enables a Workgroup to organize projects into forums where everyone can find, view and discuss project information. Features information outline, navigation aids and full-text search. Anyone connected to the forum directly or through e-mail can contribute, respond, query and retrieve information. Intelligent agents can automatically capture information from news services or link forums to critical data from within the company. Supports major messaging standards, including Microsoft Mail and Lotus cc:Mail.

Compatible with: Windows 3.X
RAM required: 4 MB
Disk storage required: 10 MB
Additional hardware/software required: Windows 3.X
Network compatibility: Novell; Banyan; Windows for Workgroups
Customer support: free phone support; tech support via on-line access
Site licensing is available

Digital Equipment Corp. @EC)
146 Main St.
Maynard, MA
01754-2571
Phone: 1-800-344-4825

TeamLinks Office (list price $299) is a conferencing system for **TeamLinks** users. Permits **Mac** clients to access DEC Notes server software, open 2 conferences simultaneously and employ search function to find messages. Consists of **TeamLinks** Mail, **TeamLinks** Routing, **TeamLinks** Conferencing and **TeamLinks** Library Services and DEC VTX 6.2 software.

Compatible with: Windows 3.X
RAM required: 5 MB
Disk storage required: 40 MB
Additional hardware/software required: Windows 3.X

LinkWorks Client (list price $299) is a customizable **office** framework designed for workgroups. It is an open client/server product, developed to run in configurations that include different types of clients, servers, databases and network transport protocols. The client software is layered on a graphical, windows-based user interface. A **LinkWorks** client requires that the **LinkWorks** server **software** has been installed on a supported server platform and that a network link has been established between client and server. Provides customizable object attributes and master documents. Allows sharing of documents and filing containers between users within the same **LinkWorks** domain. Provides document version control, automation of **workflow** processes, **centralized** system administration and data security.

Compatible with: **Sun/Solaris;** IBM **RS/6000/AIX;** HP **9000/HP-UX;** Apple Macintosh; **OS/2;** Windows 3.X; Windows NT
RAM required: 8 MB **(Mac);** 16 MB (Sun and Windows NT); 32 MB (HP)
Disk storage required: 5 MB **(Mac);** 7 MB (Windows NT)21 MB (HP, Sun)
Additional hardware/software required: CD-ROM drive; **LinkWorks** Server software
Network compatibility: **TCP/IP; DECnet;** IPX/SPX

Lotus Development **Corp**. (subsidiary of IBM)
55 Cambridge **Pkwy**.
Cambridge, MA **02142-**1295
Phone: **1-800-**343-54 14

Lotus Notes 4.0 (list price $69 per desktop; $275 for **full** developer's package; $495 per server; $2,295 for multiprocessor version) is a **workgroup/groupware** computing environment. **See section 4 for more information on Lotus Notes 4.0.** Adds capabilities to earlier versions of Lotus Notes including a multiple user interface that allows users to surf documents and includes folder, document list and document viewing windows and an improved document editor that can **simplify** many common end-user tasks.

Operates as a fill **OLE/2** container and client and supports **OLE/2** in place editing, drag and drop, and OLE automation. Offers additional support for mobile users including a point and click dialog box and the ability to replicate more than 1 database on more than **1** server via a single connection to a server. Adheres to the **cc:Mail** user interface specification including **cc:Mail's 3-pane** window for easy scrolling and viewing of mail messages. Features API implementations for Visual Basic and **C++** and for **LotusScript** which is a BASIC compatible, object-oriented structured programming environment. Also includes an agent builder. Allows users to share text, graphics, spreadsheets, reports, and word processing documents. **Utilizes** icons for every department or Workgroup within the **organization**. Users can double click on icons to participate in group discussions, track sales activity, distribute bulletins and access other program **functions**.

Features a GUI and support for custom workspace with 3D database icon representation and pull-down, hierarchical menus. Provides Windows Program Manager support, an on-screen document navigator and speed keys. Offers database **customization** and can design fields, forms, icons, views, filters, functions, and database access control lists.

Can merge text, graphics, scanned images and worksheets into presentation quality documents for on-screen display or printed output and **access** custom and international dictionaries, automatic compression, **colors,** paragraph style attributes, headers, footers, spell checker, search and replace and hypertext through **doclink**. Supports **e-**mail, new mail notification, unlimited file attachments and 79 character user names. Offers multiple delivery options, carbon and blind copy features, mail file security and a **fax** gateway.

Release date: 1996; Number sold: **2,200,000**
Compatible with: Windows 95; Windows 3.X; Windows NT; **OS/2; SCO OpenServer;** Sun **SPARCsystem/Solaris;** HP 9000 series **700, 800/HP-UX;** IBM **RS/6000/AIX;** PC-MS/DOS
RAM required: 4 MB (Windows, OS/2 client); 5 MB **(Mac** client); 16 MB (server)
RAM recommended: 5 MB (Windows, OS/2 client); 6 MB **(Mac** client); 32 MB (server)
Disk storage required: 40 MB (client); 120 MB (server)
Network compatibility: Novell NetWare; Banyan; Token Ring; Ethernet; AppleTalk; LAN Manager; **TCP/IP;** LAN Server; DEC Pathworks; Windows for Workgroups; **MacTCP**
Source language: C
Customer support: 30day free phone support
Site licensing is available

Lotus Organizer (list price $99 -single-user; $1,116 **-10-user;** $1,980 **-20-user;** $4,150 **-50-user;** $5,800 **-100-user)** is a personal information manager **and** personal/group scheduling program. Lotus Organizer arranges daily tasks such as note-taking, tracking todos and logging calls. Allows users to choose meeting attendees from a large directory, display free and busy times for group scheduling, and search for information within the program's files.

print layouts include Calendar Weekly 2-page, Calendar Daily Page and a Notepad table of contents. A Print Layout Guide contains samples of each print layout to assist users with their choice. The program also supports show-through printing for three Calendar layouts: Monthly Calendar, Weekly 2-Page, and Daily Page, so that users can print information as it appears on screen.

The program also reindexes and compacts files on the user's hard drive. Administration for enterprise-wide group calendaring and scheduling are included. A utilities menu option in the Administration Program provides the ability to change or reset user access levels, compact a program file, or compact multiple program files through a command **file.**

Files may be imported or exported into variety of **PDAs** using **IntelliLink** file transfer program. On-line help is included. The program works with cc:Mail or Lotus Notes.

Compatible with: Windows 3.X
RAM required: 6 MB
Disk storage required: 8 MB
Network compatibility: Novell NetWare; Banyan; LAN Manager; **LANtastic;** LAN Server
Customer support: 90day free phone support
Site licensing is available

The Mesa Group, Inc.
29 Crafts St.
Newton, MA 02160
Phone: **1-617-*964-7400***

Conference+ (list price $1,500 -20-user) is a bulletin board and **conferencing** groupware package that works with Microsoft's Exchange Server. Features public folders and replication servers. Allows users to bundle many comments posted to bulletin board in one e-mail message to reduce replication traffic.

Compatible with: Windows 3.X
RAM required: 2 MB
Disk storage required: 2 MB
Additional hardware/software required: Microsoft Mail for PC Networks **V.3.0** or later
Network compatibility: Novell NetWare; Banyan; LAN Manager

Microsoft Corp.
One Microsoft Way
Redmond, WA
980526399
Phone: 1-800-426-9400

Microsoft Exchange Server (Version 4.0) (see Section 4 for information). (list price: $700) Offers users a combination of e-mail, group scheduling, electronic forms and groupware applications on a single platform. Enables users to manage the combination with a centralized administration program. Program's e-mail features include universal in boxes for access to all information sources via MAPI, integrated remote connectivity via PPP and RAS, text formatting including drag and drop and in place editing, server-based rules for processing mail and integration with Windows NT security models for secure logons, discretionary access controls, auditing and security IDs. Groupware features include built in bulletin boards, document libraries and customer tracking, message-based replication of public folders, Microsoft Exchange Forms Designer, group scheduling and personal calendaring, and more than 1,500 print layouts including trifold .

Program's administration features include centralized management of system components with the graphical administration program, server and link monitors for automatic notification and escalation of system problems, integration with Performance Monitor and Event Viewer in Windows NT Server, Microsoft Mail Connector for coexistence with Microsoft Mail users and batch creation of users from Windows NT Server, NetWare 3.x Bindery, and NetWare 4.x NDS.

Release date: Spring 1996
Compatible with: Windows NT Server
RAM required: 32 MB (server); 1 MB (DOS client); 6 MB (Win or Win 95 client); 16 MB (Win NT client)
RAM recommended: 64 MB (server); 8 MB (Win or Win 95 client)
Disk storage required: 250-500 MB (server); 2-3 MB (DOS client); 12-20 MB (Win client); 12-22 MB (Win 95 or Win NT client)
Network compatibility: Novell NetWare; PC-LAN; TCP/IP; NetBIOS; AppleTalk; IPX/SPX; NetBEUI; OSI TP4

Microsoft Schedule+ (list price $195$775 **-Mac;** $395 **-5-user-DOS)** is a time management program used to manage personal calendars or schedule meetings across an entire network. Designed to work with Microsoft Mail 3.0 on an AppleTalk network. Automatically overlays schedules to show what time slots are open for everyone invited to a meeting.

Allows user to select a date, and the program shows **the** times everyone is available. Changes meeting times with one keystroke. Automatically enters meeting acceptances into the calendar. Allows user to view schedule at a particular time and date to make sure meetings are convenient. Resizable printing facility allows user to print out schedule to **fit** inside any notebook. Flexible time window allows user to plan any meeting.

Records **to-do** lists and other information in notes area. Publishes all specifics about a schedule or just the ones for which user is available. Shares calendar across workgroups so people can **find** each other. Alarm feature allows user to attach a notifier to meetings, for five minutes or five months before the event. Sends meeting notices across Microsoft Mail gateways.

Personal calendar offers scrollable day window for hours that are pertinent to user. Offers one-click access to other months, days or years. Provides password protection. Automatically addresses meeting request notices. Provides optional confirmation of meeting requests. Saves calendar data in other formats, such as Microsoft Excel and Word.

Compatible with: Apple Macintosh; PC-MS/DOS; Windows 3.X; Windows 95
Additional hardware/software required: Microsoft Mail **V.3.0**
RAM required: 2MB
Network compatibility: Novell NetWare; NetBIOS; Banyan; AppleTalk; LAN Manager; EtherTalk; Windows for Workgroups

Microsystems Software, Inc.
600 Worcester Rd.
Framingham, MA 01701-5342
Phone: 1-800-489-2001

CaLANdar (list price: $595 -10-user; $3,990 -lOO-user) is an enterprise-wide, e-mail enabled, Workgroup scheduling program which coordinates group and personal appointments and tasks. The scheduling capabilities are scalable from 10 users to 128,000 users. Provides automatic time zone adjusting for worldwide networks and instant access to remote user availability data.

Core scheduling features are available to both DOS and Windows users. The WAN versions are e-mail enabled, meaning that they provide support for multi-server environments. Wide-area capabilities include global name maintenance. E-mail support includes name synchronization, use of the e-mail's server-to-server transport support and access to remote e-mail users.

In addition to people scheduling capabilities, the program provides several resource scheduling features. Prevents the scheduling of a conflict for a resource. Includes a Resource Manager facility which lets the user take a resource off-line or override a previous reservation. Also provides a resource group called Pools. Pools are groups of functionally identical resources such as conference rooms that hold the same number of people. When a pool is selected, the program automatically assigns the next available resource in the pool.

Reports include a weekly planner, tri-fold daily organizer, and monthly planner. Provides detailed, summary and monthly reports. Accommodates custom reports. Schedules and assigns personal and group tasks. Provides a custom forms overlay feature which lets the user create and use custom formatted screens. Provides in/out of the office status for people tracking.

Compatible with: Windows 3.X; PC-MS/DOS; Apple Macintosh
Network compatibility: Novell NetWare; Banyan; LAN Manager; LANtastic; DEC Pathworks
Customer support: 120day free phone support; tech support via BBS

Novell, Inc.
1555 N.
Technology Way
Orem, UT
84757
Phone: 1-800-
453-1267

Novell's GroupWise 4.1 (list price $695 a 5-pack) operates as an enterprise messaging system that integrates e-mail, personal calendaring, group scheduling and task management into a single application which supports 12 client desktops, 10 server environments and 23 gateways. GroupWise also includes server-based rules for message management, basic workflow and proxy and the ability to track and retract messages through the user's out box. All the program's 32-bit multiprocessing servers provide 24x7 uptime support for on-line database maintenance and optimization and, in addition, the NLMs provide support for SNMP. GroupWise Administration provides the option for central or distributed administration as well as automatic directory synchronization between domains and post offices. Provides remote clients for Windows, Macintosh and DOS, all of which can utilize both async and wireless connections. Includes paging capabilities and the ability to access all the functions of the messaging systems by telephone using the Telephone Access Server.

Compatible with: Windows 3.X; PC-MS/DOS; Apple Macintosh, Power Mac; OS/2; AT&T UNIX System V; IBM RS/6000/AIX; Sun SPARCstation/SunOS, Solaris; SCO UNIX; DG AViiON/AOS/VS, HP 9000 series/HP-UX
RAM required: 450 KB
Disk storage required: 6 MB (DOS); 4 MB (Mac)
Additional hardware/software required: Novell NetWare; Mac System 7 (Mac users)
Network compatibility: 3Com; Banyan; TOPS; LAN Manager; TCP/IP; 10NET; LANtastic; LAN Server; DEC PCSA; Invisible Network; PC NOS; DNA
Customer support: Maintenance fee $2,500-$15,000 per yr. silver, gold, or platinum Premium Services; 90-day toll call phone support; Priority Service support agreement available

See Section 4 for further information on GroupWise XTD (scheduled for release 3Q96).

GroupWise XTD operates as an integrated line of groupware products that enable knowledge workers to accelerate their decision making processes, enterprise wide and departmental workgroups to accelerate the execution of tasks and business processes, power users and applications developers to accelerate the development and deployment of ad hoc and production applications and system administrators to manage their applications and *networks* from a common point of administration. Offers a framework for how users complete such day-today tasks as responding to voice mail or e-mail, scheduling a meeting, participating in a discussion or submitting an expense report into a workflow process.

Includes tools that enable users to streamline, prioritize, manage and automate responses to incoming information and allows them to better manage interruptions and execute planned tasks. Features a universal in box that combines numerous in boxes such as a voice mail in box, an e-mail in box, a fax machine and a pager into a single point of entry for all types of information regardless of data type. Maintains an open, complete customizable and extensible framework and enables users to choose the applications they need to shorten the decision process. Provides intelligent search and retrieval, concurrency management and version control, database access and shared folders. Includes a complete system view where administrators can graphically manage their network and their groupware infrastructure at the same time.

Release date: 3Q/1996
Compatible with: Windows 95; Windows 3.X; Apple Macintosh, Power Mac; UNIX

Now Software, Inc.
921 S.W. Washington St., ste. 500
Portland, OR 97205-2822
Phone: 1-800-237-2078

Now Up-To-Date (list price $99) is a calendar, reminder and appointment scheduling application. Allows users to maintain personal and Workgroup calendars while on the road. Allows users to schedule appointments, set reminders, share calendar information over the network and print calendars to an appointment book.

A Views and Styles feature lets the user customize calendars and edit 'them to each user's specifications. Users can view single or multiple days, single or multiple weeks, single or multiple months or year at a glance. Users can also edit any event in any view, control number of hours displayed, draw attention to important events with Post-It Notes and banners, create multiple style groups and display multiple views of the same calendar.

The Public Calendars function coordinates the user's schedule with that of associates. Combines related calendars into custom groups, filters out information not important to the user and exports information to other calendars. Printing options include support for organizers and appointment books. Prints calendar in pocket, organizer or portfolio sizes in any desired view, creates large wall charts of group calendars and simulates 2-sided printing with the folded pages option. Integrated with Now Software's Now Contact, a flexible contact manager.

Compatible with: Windows 95; Windows 3.X; Apple Macintosh, PowerBook, Performa, Quadra, Power Mac
RAM required: 1.5 MB (Mac); 4 MB (Windows)
Disk storage required: 2 MB (Mac); 10 MB (Windows)
Additional hardware/software required: Mac System 7
Network compatibility: AppleTalk; Banyan; Novell NetWare; Windows NT Server
Customer support: 90-day free phone support; tech support via on-line access
Site licensing is available

ON Technology Corp.
1 Cambridge Center
Cambridge, MA 02142-1604
Phone: 1-800-7676683

Meeting Maker (list price $495 5 users; $895 -10 users) group scheduling package handles the routine work of setting up meetings including finding common free time, distributing agendas, collecting responses and following through as the particulars of a meeting change. Compatible with **QuickMail,** Microsoft Mail, TOPS, AppleTalk Remote Access and other network programs. Supports **cross-**zone and multiple server configurations.

Features Auto-Pick which finds available times for all participants and Composite Scheduler which tells when guests can meet. Allows user to include an agenda or attach a file. Schedules recurring meetings and provides invitation groups for guest lists. Icons tell status of a meeting. As guests respond, the user is notified. Provides auto log-in at start up, monthly, weekly, and daily views, blocks out activities for private times and sets reminders for meetings and activities. Prints to popular organizers and exports to palmtops.

Provides notification of all meeting proposals and notification as **canceled** meetings are automatically removed from the scheduler. Accepts, declines or defers decision on invitations. Sends confidential comments to **the** proposer. Gives proxy access to other users. Proxy access can be read-write or read-only proxies. Activities and **to-do** items can be hidden ***from*** proxies.

Compatible with: Windows 3.X; Apple Macintosh; PC-MS/DOS
RAM required: 4 MB (DOS, Windows); 2 MB **(Mac)**
Network compatibility: Novell NetWare; NetBIOS; **IPX/SPX;** TOPS; AppleTalk; AppleShare; **TCP/IP;** EtherTalk; LocalTalk
Customer support: free phone support; **add'l** support agreement available
Site licensing is available

Oracle Corp.
500 Oracle Pkwy.
Redwood Shores, CA **94065**
Phone: **1-800-633-0596**

Oracle Office (list price $150 per seat) is a Workgroup computing system for **end-**users and administrators which is scalable from small workgroups to large enterprises. Integrates messaging and scheduling, calendar and directory services, and proofreading facilities.

Office Mail enables users and applications to share, exchange, and manage information without gateways. Office Scheduler allows users to search other users' schedules for free periods and automatically send invitations or schedule events. Provides a personal calendar which can be viewed by day or week and annotated with reminders and alarms. A personal organizer feature allows the user to **organize** messages into folders, query folders for a particular topic or person and sort messages by priority. Enterprise-wide directory services enable the user to search on full names, roles, organizations, and facilities and allows fuzzy-searching to **find** names that sound alike. **CoAuthor** automatically checks the user's outgoing messages for spelling, punctuation, **capitalization,** and usage.

Provides an integrated, menu-driven interface for administrators. Automatically propagates the directory information to other servers when a user is added. Uses a model of the **office** to distribute administrative functions to appropriate departments and provides utilities for batch administration.

Compatible with: Sun **SPARCstation/SunOS**

Symantec Corp.
10201 Torre Ave.
Cupertino, CA
95014-2132
Phone: 1-800-**44 l-7234**

ACT! (list price $399; $599 **-2-user** network; **$1,299-5-user** network) handles all details involved with taking care of user's customers, clients, **coworkers,** suppliers and prospects. It includes pull down menus and pop up windows. **Organizes** paper files, business cards, messages and notes. Offers unlimited number of contacts, databases and notes for each contact. Offers 29 user definable fields. Automatically updates contact history. Tracks expenses. Includes calendar manager with daily **tasklist** of calls, meetings and to dos. Generates activity list for user selected data range, week at a glance and activity timer. Offers memory resident alarm.

Act! generates letters and form letters with dates, addresses, salutations and closings. Prints Avery and HP labels. Generates custom reports, including completed and future activity, expense, address and phone lists and contact reports. Offers password security. Includes library of miscellaneous information, calculator, autodialer and project management capability. Imports and exports data including dBase file formats. Network version allows users to maintain public or private schedules and databases via passwords.

Compatible **with**: PC-MS/DOS
RAM required: 640 KB
Disk storage required 3 MB
Additional **hardware/software** required: Modem
Network compatibility: Novell NetWare; 3Com; NetBIOS; **LANtastic**; Windows for Workgroups
Customer support: tech support via on-line access; tech support via BBS; **fax-on-**demand phone&x support; unlimited **90-day** phone support; **PriorityCare, PremiumCare** support agreement avail
Site licensing is available

TeamWARE
(division of ICL, **Inc.)**
800 Central Expwy., **M/S** 33-42
Santa Clara, CA 95052
Phone: **1-800-240-TEAM**

TeamWARE Office (list price: **$265-$4** 16 per user) is client/server-based groupware including **TeamWARE** Mail: e-mail for Windows, Macintosh, and terminal clients with gateways available for SMTP, MHS, X.400, and fax; **TeamFlow**: **workflow** for routing of any type of file or combination of files including forms with a database for tracking the status of every item; **TeamWARE** Forum: **conferencing/discussion** database for sharing information locally or across an enterprise and supporting discussion threads, and attachments; **TeamWARE** Calendar group scheduler for creating calendars for individuals and resources such as company cars and conference rooms and searching a group of calendars to locate a common free time for meetings; **TeamWARE** Library: document manager for storing any type of file in libraries, folders, and subfolders, establishing different access rights, allowing groups of users to share files, and providing file locking, version control, and text searching; and **TeamWARE** Assistant: tool for mobile users that enables them to **organize,** transfer, and resynchronize files from desktop PCs and file servers to remote PCs with off-line mail handling. Features directory **synchronization** in WAN and remote access and allows modules to be used independently, or together as an integrated solution sharing a common directory.

Compatible with: Windows 3.X; Windows NT; **OS/2**; AT&T **UNIX** System V; **Sun/Solaris; IBM/AIX**; HP/HP-UX; **DG/DG/UX**
RAM required: 8 MB
Disk storage required: 17 MB
Additional hardware/software required: Novell NetWare
Network compatibility: Novell NetWare; LAN Manager; Windows NT Advanced Server
Customer support: phone support; tech support via BBS.

Uniplex Software
1333 Corporate Dr., Ste. 240
Irving, TX 75038
Phone: l-800-356-8063

onGO Office Client (list price $99 and up) includes e-mail, electronic directory services, group and resource scheduling and calendaring. Offers environment for UNIX workstation or X-terminal user. Graphical desktop provides **onGO** mail, calendar and directory clients, and provides print services and file management for **onGO** and third-party desktop applications.

Compatible with: IBM **RS/6000/AIX; Sun/Solaris;** HP/HP-UX; **DG/DG/UX;** Pyramid Nile; NCR 3000; Windows 3.X
RAM required: 5.6 MB
Disk storage required: 75 MB
Additional hardware/software required: Motif
Network compatibility: TCP/IP; NFS; **IPX/SPX**
Customer support: **30-day** toll-free phone support; **add'l** support agreement available
Site licensing is available

onGO Office Server (list price: $260 and up) is a client/server Workgroup messaging and scheduling system. Provides global communications infrastructure that can interoperate across enterprise, linking all workgroups worldwide into single, unified enterprise Workgroup. Provides e-mail, calendar and schedule, and directory services. Conforms to X.400 messaging standard. Clients run on Windows or OSF/Motif.

Compatible with: IBM **RS/6000/AIX;** DG AViiON/DG/UX; **Sun/Solaris; HP/HP-**UX; NCR 3000; Unisys **6000/65;** Pyramid Nile; **SNI/SINIX**
RAM required: 16 MB
Disk storage required: 120 MB
Network compatibility: **TCP/IP; IPX/SPX;** NFS
Customer support: 30day toll-free phone support; additional support agreement available
Site licensing is available

onGO Document Management System (list price $130 per server and $90 per client) is an enterprise-wide, compound document management system which combines search and retrieval techniques with ad hoc **workflow** for client/server environment. Monitors draft or version and records amendments and history. Provides automatic status notifications, access security and archival/deletion.

Compatible with: Windows 3.X; IBM **RS/6000/AIX; Sun/Solaris;** DG AViiON/DG/UX; HP **9000/HP-UX; SCO** UNIX
RAM required: 3.6 MB
Disk storage required: 50 MB
Network compatibility: **TCP/IP;** Novell NetWare; NFS; Wollongong Pathway; **NetManage** Chameleon; **Winsock** for Windows
Customer support: 30day toll-free phone support; additional support agreement available
Site licensing is available

Ventana Corp.
1430 E. Ft.
Lowell Rd., Ste.
301
Tucson, AZ
85719
Phone: 1-800-
325-1938

GroupSystems V (list price $24,900 -20-user; $34,900 -50-user; $44,900 -100-user) provides the basic tools that support a variety of group processes and can be combined in many ways to address a variety of meeting scenarios. Meeting Manager offers a collection of features to support the session leader and the group as they work together to accomplish objectives during a face-to-face meeting. Group Link is the home base for GroupSystems V in the office environment. Group Link is a project-oriented interface that allows the group to collaborate with other people from their desks, using the same GroupSystems V tools used in the meeting room environment. Agenda allows groups to plan and run meetings. Teams can create session and pre-plan the flow of a GroupSystems V meeting in advance.

Briefcase incorporates a memory-resident set of utilities available to team members while using GroupSystems V. Briefcase includes Quick Vote, Mood Meter, Calculator, File Reader, Notepad, Calendar and Clipboard. Electronic Brainstorming tool is designed to gather ideas and comments in an unstructured manner. The Categorizer allows participants to cut-and-paste from a list or reference file, and to refine, rearrange, categorize and consolidate the items from the file. The Vote tool supports consensus development through group evaluation of issues. Topic Commentator supports idea generation in a structured format. Group Dictionary supports information management by letting the group build and define a list of terms that have a common meaning for all participants. Alternative Evaluation allows the group to weigh or rate a list of alternatives against a list of criteria. Policy Formation enables groups to develop and edit a statement through an iterative process of review and revision.

Compatible with: PC-MS/DOS
RAM required: 4 MB
Disk storage required: 10 MB
Additional hardware/software required: Novell NetWare
Network compatibility: Novell NetWare; Banyan; Token Ring; Ethernet; TCP/IP
Customer support: Maintenance fee 10% of purchase price per year

Desktop Video Conferencing Packages	
Alpha Systems Lab, Inc. 2361 McGaw Ave. It-vine, CA 92714 Phone: 1-800-576-4ASL	**MegaConference** (list price- $1,100 per user) personal videoconferencing system allows users to transmit/receive live data between any 2 locations. Features document sharing with 2 video windows and Whiteboard, simultaneous 2-way teletype dialoguing and face-to-face live True Color 2-way video. Provides screen capture, video snap shots and bidirectional video/audio/file transfer. Operates over POTS. Compatible with: Windows 3.X RAM required: 4 MB Disk storage required: 4 MB Additional hardware/software required: Windows 3.X; 1 free 16-bit ISA slot and 1 8-bit slot
AT&T Global Information Solutions 1700 s. Patterson Blvd. Dayton, OH 45479-0001 Phone: 1-800-447-l 124	**Vistium Share** Software Professional (list price- $99 per single-user; $198 -2-user; $495 -5-user; $4,950 -50-user) is a personal conferencing package which connects users via modem and LAN links. Provides shared-whiteboard features for annotating documents and images. Allows application running on one user's machine to be viewed and controlled by remote user. Allows for application and file sharing. Compatible with: Windows 3.X; PC-MS/DOS RAM required: 8 MB Disk storage required: 7 MB Additional hardware/software required: Novell NetWare Network compatibility: Novell
Avistar Systems (subsidiary of Visionary Group) 555 Hamilton Ave. Palo Alto, CA 9430 1 Phone: 1-800-568-2847	**Avistar Collaboration Systems** (list price $995 -client; $14,999 -server) is a family of desktop collaboration products that include video conferencing, document conferencing and visual directory applications. The modules include Directory, which provides public and private address books, Conference, which allows users to participate in interactive desktop video conference, and Shareboard, which works independently or in conjunction with ongoing video conference. Clients run on Windows, Windows for Workgroups, Macintosh and Sun. Compatible with: Sun SPARCclassic/Solaris RAM required: 16 MB Disk storage required: 20 MB

Creative Labs, Inc. (subsidiary of Creative Technology, Ltd.) 1901 McCarthy Blvd. Milpitas, CA 95035 Phone: l-800-998-1000	**ShareVision PC3000** (list price- $1,599) desktop videoconferencing package transmits voice, data and video over single analog phone line. Allows users to share Windows applications in real-time. Scans in documents via input device and shares it across phone line. I ncludes fax modem, audio/data compression card, Video Blaster RT300, color video camera, ShareVision's application software and headset. Compatible with: Windows 3.X; PC-MS/DOS RAM required: 8 MB Disk storage required: 6 MB Additional hardware/software required: 2 available ISA bus slots
EyeTel Technologies, Inc. 501 Goodlette Rd., N, Ste. D100 Naples, FL 33940 Phone: 1-941-435-7079	**Communicator** III (list price: 84,995 and up) desktop videoconferencing system includes interactive viewing, annotation, file sharing, application sharing and white board capabilities. Combines features and functionality's of Communicator I and Communicator II with full motion, H.320-based videoconfetencing. Interoperates with other Communicator products. Compatible with: Windows 3.X RAM required: 4 MB Disk storage required: 10 MB Additional hardware/software required: Novell NetWare Network compatibility: NetBIOS; Token Ring; Ethernet; TCP/IP; ARCnet; NetBEUI; ATM; RS-449/V.35; ISDN Customer support: 24-hour phone support

IBM (International Business Machines) Old Orchard Rd. Armonk, NY 10504 Phone: 1-800-426-3333	**Person to Person for Windows** (list price: $225 -single-user; $1,475 -IO-pack) offers a solution for users of desktop systems needing real-time interactive conferencing and collaborative working capability. Multiple communications media and protocols are supported including NetBIOS, SNA, ISDN, TCP/IP and asyac. Includes a Call Manager which acts like a telephone and must be activated before meetings can begin. It provides a direct link to other participants, and logs and displays information about calls. The Address Book Manager works with the Call Manager to store the name, user ID, and telephone numbers of people contacted. The Chalkboard provides WYSIWYG capability for interactive real-time collaboration, and is the key tool used to share application data with other participants. The Clip feature is an extension of the OS/2 or Windows clipboard and is another way of sharing data. The Talk feature offers a method of exchanging text messages with others through the keyboard. The Video feature extends the collaborative sharing of data to include the visual sharing of either live or recorded motion images of people or objects. Stills Capture allows the capture of images from video sources in bitmapped format, using ActionMedia II hardware on PC platforms. Includes DDE capability. OS/2 and Windows versions interoperate. Compatible with: Windows 3.X RAM required: 8 MB Disk storage required: 5.5 MB - Additional hardware/software required: Windows 3.X; Communication Manager12 Network compatibility: Token Ring; Ethernet; LAN Server; NetBIOS; TCP/IP; Novell
Intel Corp. (Personal Computer Enhancement Division) 5200 N.E. Elam Young Pkwy. Hillsboro, OR 971244397 Phone: 1-800-538-3373	**ProShare Video System 200** (list price:-$999) videoconferencing application is based on H.320 videoconferencing standard. Runs over ISDN and LAN connections. Includes communications cards, color video camera, microphone and earpiece. RAM required: 8 MB Disk storage required: 17 MB Additional hardware/software required: Windows 3.X; ISA slots Network compatibility: Novell; TCP/IP; Windows for Workgroups; NetBIOS; IPX/SPX; Token Ring; Ethernet.

Northern Telecom, Inc. 200 Athens Way, Northern Telecom Plaza Nashville, TN 37228 Phone: 1-800-6678437	**Visit Video for Windows** (list price: $2,649 per user -grayscale; $4,499 per user - color) personal videoconference system uses a PC to create a collaborative working environment. When each user dials and connects to another user, their separate computer screens become a shared workspace. Transmits compressed, grayscale video calls to other users. Adjusts video resolution, brightness and contrast to improve transmitted images. Provides zoom, pan and tilt of a videoconference picture using software functions rather than moving the computer-mounted camera. Allows capture and print of high-resolution snapshots of video images. Users can move and resize the video window to fit the workspace. Provides navigation within a document. Allows review of PowerPoint, MacDraw or other presentations on-screen, even if 1 participant does not have the application that created the presentation. Drawings and documents can be marked up simultaneously with built-in colored pens, highlighting and text tools. Allows creation of new materials from a shared graphics palette that includes free form drawing tools, lines and boxes. Compatible with: Windows 3.X RAM required: 8 MB Additional hardware/software required: Windows 3.X Customer support: unlimited toll-free phone support
PictureTel Corp. 222 Rosewood Dr., The Tower at Northwoods Danvers, MA 01923 Phone: 1-800-716-6000	**PictureTel** Live **PCS 100** (list price: $4,995) H.320 personal visual communications add-on solution for ISA bus PC running Windows allows user to conduct full-color, full-motion live video meetings and work collaboratively by simultaneously viewing, annotating and exchanging information over switched digital phone networks. Compatible with: Windows 3.X RAM required: 4 MB Disk storage required: 1 MB Additional hardware/software required: Windows 3.X; ISA or EISA Bus Network compatibility: ISDN

TeamWARE
(division of
ICL, Inc.)
800 Central
Expwy., **M/S**
33-42
Santa Clara, CA
95052
Phone: **1-800-240-TEAM**

TeamWARE (list price- **$265-$416** per user) is client/server-based groupware. It includes **TeamWARE** Mail: e-mail for Windows, Macintosh, and terminal clients with gateways available for SMTP, MHS, X.400. Fax **TeamFlow** is **workflow** for routing of any type of file or combination of files including forms with a database for tracking the status of every item. **TeamWARE** Forum involves **conferencing/** discussion database for sharing information locally or across an enterprise and supporting discussion threads and attachments. The **TeamWARE** Calendar performs group scheduler for creating calendars for individuals and resources such as company cars and conference rooms and searching a group of calendars to locate a common free time for meetings. The **TeamWARE** Library consists of a document manager for storing any type of file in libraries, folders, and subfolders, establishing different access rights. This allows groups of users to share files, and provide file locking, version control, and text searching. **TeamWARE** Assistant: tool for mobile users enables them to **organize,** transfer, and **resynchronize** files **from** desktop PCs and file servers to remote PCs with off-line mail handling. The features directory **synchronization** in WAN and remote access allows modules to be used independently or together as an integrated solution sharing a common directory.

Compatible with: Windows 3.X; Windows NT; **OS/2;** AT&T UNIX System V; **Sun/Solaris; IBM/AIX;** HP/HP-UX; **DG/DG/UX**
RAM required: 8 MB
Disk storage required: 17 MB
Additional hardware/software required: Windows 3.X; Novell NetWare Network
Compatibility: Novell; LAN Manager; Windows NT Advanced Server
Source language: C
Customer support includes: phone support; tech support via BBS

White Pine
Software, Inc.
40 Simon St.,
Ste. 201
Nashua, NH
03060-3043
Phone: **1-800-241-PINE**

CU-SeeMe for Windows is designed to assist users with participating in person to person videoconferences over **TCP/IP** protocol implementing local area and wide area networks. **Offers** multiple platform support. Features an address list that allows users to save, add and edit participant addresses and reflector sites. **Utilizes** an audio window providing a separate window for audio settings and control. Enables users to view up to 8 participant windows for group conferences with audio and talk window support for unlimited numbers of participants.

Provides local conference window controls for button control setting of microphones, video and status bar and a flip window for mirror images. Adjusts picture via a **slidebar** for brightness and contrast. Controls the transmission of frames with **a** maximum and minimum bits per second. Implements 4 compression algorithms with 2 sample settings at **100ms** and 50ms. Compresses video at standard and high resolutions. Supports **4-bit** grayscale images.

Compatible with: Windows 3.X
RAM required: 2 MB
Additional hardware/software required: Sound card with 8-bit sound with microphone input and speaker output; IP network connection; Video Spigot capture board; Video camera with NTSC output and RCA cable
Network compatibility: **TCP/IP;** Windows for Workgroups

Whiteboard
Products

AT&T Global Information Solutions
1700 s. Patterson Blvd.
Dayton, OH
45479-0001
Phone: 1-800-447-1 124

Vistium Share *Software* Professional (list price: $99 - single-user; $198 - 2-user; $495 - 5-user; $4,950 - 50-user) personal conferencing package connects users Via modem and LAN links. Provides shared-whiteboard features for annotating documents and images. Allows application running on one user's machine to be viewed and controlled by remote user. Allows for application and file sharing.

Compatible with: Windows 3.X; PC-MS/DOS
RAM required: 8 MB
Disk storage required: 7 MB
Additional hardware/software required: Novell NetWare
Network compatibility: Novell

Crosswise Corp.
105 Locust St., Ste. 301
Santa Cruz, CA 95060
Phone: 1-800-747-9060

Face to Face for Windows (list price- $118 -2-user; $295 -5-user; $2,950 -50-user) document conferencing software allows users in different locations to review and annotate documents in real-time using their PCs and telephones. Documents created in any Macintosh or Windows application can be reviewed in a meeting. Meetings can be conducted between two users of any mix of Macintosh and Windows computers. All documents included in meetings are automatically distributed to each meeting participant and can be saved for subsequent review, print or forwarding.

Meeting participants can be selected from the built-in Address Book. Allows users to simultaneously view documents, guide one another with electronic pointers and make annotations using drawing tools as they speak on the telephone. Creates meeting files that contain all relevant information including a list of participants, set of documents to be reviewed and all annotations made during a meeting. Meeting files can be saved by each participant. Allows text notes and annotations to be cut-and-pasted into the original document and accommodates cut-and-paste of pictures into or out of other applications.

Compatible with: Windows 3.X
RAM required: 4 MB
Disk storage required: 1.5 MB
Additional hardware/software required: Windows 3.X; Novell NetWare; Modem; ISDN terminal adapter or telephone
Network compatibility: Novell
Customer support: 90-day free phone support
Site licensing is available

DataBeam Corp.
3191
Nicholasvllle
Rd.
Lexington, KY
40503
Phone: l-800-
877-2325

FarSite (list price: $99 -Standard; $199 -Corporate) allows PC users at separate locations to share images, documents and other visual information in real-time multiport communications via a Windows-compatible PC. Intended to be used as an adjunct to a telephone conversation. Allows parties to share text, images, graphics, spreadsheets and computer-aided designs in real-time, over standard telephone lines. Participants can view, annotate, zoom and pan across shared images while they converse on the phone.

Provides electronic meeting metaphors for common presentation tools including shared whiteboard, concurrent on-line pointers, drawing tools and an electronic tray for storing changes made to any individual screen display or slide. Includes a tool for adding or editing text in any Windows font style or size, a variety of annotation editing options, Windows cut, copy, and paste features and **context-**sensitive, on-line help.

Users capture screens from other applications using a built-in snapshot tool. Information can also be imported from 12 graphic file formats including PCX, TIFF, EPS and JPEG. Provides compression techniques and supports ITV-T. 120 data communication standards.

Compatible with: Windows 3.X
RAM required: 8 MB
Disk storage required: 8 MB
Additional hardware/software required: Modem or LAN connection
Network compatibility: **TCP/IP; IPX/SPX**
Customer support: **90-day** free phone support
Site licensing is available

Fujitsu Systems Business of America, Inc. (subsidiary of Fujitsu, Ltd.)
1266 E. Main St., Soundview Plaza
Stamford, CT 06902-3546
Phone: l-800-4464136

DeskTop Conferencing (DTC) (list price- $99 -single-user; $138 -2-user; $395 - 5-user; $690 -10-user) communications tool allows people to hold meetings and conferences right from their PCs. Combines live application sharing and remote application control with real-time pointing, writing, and annotation facilities. Allows up to eight DTC users to take part in a single conference.

There are two roles available to users within a conference: the Chair and Participant. The Chair is usually the conference initiator and always has the highest degree of control. There can only be one Chair at any given time during a conference, but this role can be transferred upon demand. Other conference members are referred to as Participants. The Chair chooses between a Formal or a Freestyle type of conference. In a Formal conference, the Chair has the ability to approve or reject certain requests and actions of Participants. In a Freestyle conference, Participants are allowed a further range of action without need for the Chair's approval. Once a conference has been initiated, the Chair can transfer his or her PC screen to all conference Participants on-demand.

The Flipchart function allows users to make presentations, work out ideas, brainstorm, take notes, and annotate information. When Flipchart is invoked, all conference members have use of pen and pointer tools and can use these tools on conferenced blank white pages, application, or pre-existing screens. Each member's tools and movements are visible on all members' screens.

Compatible with: Windows 3.X
RAM required: 4 MB
Disk storage required: 4 MB
Additional hardware/software required: Windows 3.X; Novell NetWare; Modem
Network compatibility: TCP/IP; Windows for Workgroups; IPX/SPX
Source language: C; C + + ; Assembler
Customer support: Free phone support; tech support via BBS
Site licensing is available

Future Labs, Inc.
5150 El Camino Real, Ste. E-21
Los Altos, CA 94022
Phone: l-415-254+000

TALKShow (list price: $249 -single-user; $498 -2-user; $1,183 -5-user; $ 11,830 -50-user) desktop document conferencing program allows multiple users to simultaneously review, discuss and annotate changes in reel-time on a whiteboard. Supports modems, **NetBIOS** for LANS, **TCP/IP** and IPX. Collaborative features include multipoint application viewing, document presentation tray, phone directory, whiteboard pointer, colored highlighter and zoom feature. The document presentation tray enables users to assemble presentations by inserting hi-res pictures, schematics and text documents onto the whiteboard and create and display an unlimited number of presentation slides. The phone directory allows users to keep a list of phone numbers on file. Application viewing allows live editing within an application.

Supports B Compatible with: Windows 3.X
RAM required: 8 MB
Disk storage required: 5 MB
Additional hardware/software required: Hayes-compatible modem for modem users
Network compatibility: Novell; NetBIOS; TCP/IP; IPX
Source language: C; C+ +
Customer support: support agreement available
Site licensing is available

IBM (International Business Machines)
Old Orchard Rd.
Armonk, NY 10504
Phone: 1-800-426-3333

Person to Person for Windows (list price -$225 -single-user; $1,475 -10-pack) is a solution for users of desktop systems needing real-time interactive conferencing and collaborative working capability. Multiple communications media and protocols are supported including NetBIOS, SNA, ISDN, TCP/IP and async. Includes a Call Manager which acts like a telephone and must be activated before meetings can begin. It provides a direct link to other participants, and logs and displays information about calls. The Address Book Manager works with the Call Manager to store the name, user ID, and telephone numbers of people contacted. The Chalkboard provides WYSIWYG capability for interactive real-time collaboration, and is the key tool used to share application data with other participants. The Clip feature is an extension of the OS/2 or Windows clipboard and is another way of sharing data. The Talk feature offers a method of exchanging text messages with others through the keyboard. The Video feature extends the collaborative sharing of data to include the visual sharing of either live or recorded motion images of people or objects. Stills Capture allows the capture of images from video sources in bitmapped format, using ActionMedia II hardware on PC platforms. Includes DDE capability. OS/2 and Windows versions interoperate.

Compatible with: Windows 3.X
RAM required: 8 MB
Disk storage required: 5.5 MB
Additional hardware/software required: Windows 3.X; Communication Manager/2
Network compatibility: Token Ring; Ethernet; LAN Server; NetBIOS; TCP/IP; Novel I

Intel Corp.
(Personal
Computer
Enhancement
Division)
5200 N.E. Elam
Young Pkwy.
Hillsboro, OR
97 1244497
Phone: 1-800-
538-3373

ProShare Personal Conferencing Software, Premiere Edition (list price- $299 - single-user; $598 -2-user; $1,495 -5-user; $14,950 -50-user) allows users to connect his/her PC to a colleague's PC and share Windows-based documents simultaneously. Standard Edition allows user and colleague to mark up a shared electronic copy of a document. Provides a shared on-screen notebook. Allows the user to take a snapshot of a portion of any Windows document, or import an entire multi-page document, and transfer it to the on-screen notebook. Shared OLE enables the user to launch the source application, make changes and instantly update the document in the on-screen notebook. The user can partition the shared notebook to create a private workspace where personal notes are not visible to others.

The Premier Edition contains all of the above features, plus more. Application sharing capability allows users to work together interactively, editing the same file within the original application. Includes an address book that can store, group and dial numbers.

Compatible with: Windows 3.X
RAM required: 8 MB
Disk storage required: 11 MB
Additional hardware/software required: Windows 3.X
Network compatibility: Novell; NetBIOS; LANtastic; TCP/IP; Windows for Workgroups; WinSock; Novell LAN Workplace; PC/TCP; FTP
Customer support: toll-free phone support; phone/fax support
Site licensing is available

SMART
Technologies,
Inc.
1177 1 lth Ave.,
SW, Ste. 600
Calgary, AB,
Canada
T2R 1K9
Phone: l-403-
245-0333

Smart 2000 Conferencing (list price **-$299)** can transport a user's ideas to multiple locations over standard phone lines, ISDN connections, LAN configurations, or WAN environments. Users can, from their desktops, conduct training sessions or meetings with a group of people in another office or another country. Users can also share any Windows application with remote sites and use a variety of pen tools and pen colors to electronically draw attention to any shared computer image. Enables multiple sites to work on a file that is accessible from a single user's PC, whether or not everyone uses the same software. Each site can write, erase, type over, or point to any part of a shared image. Allows users to place documents or pictures into their program notepads and discuss them during a conference, or to bring up blank pages to brainstorm ideas. A print capture function lets users print any file directly to their notepads, and a slide sorter function permits them to arrange their images in any order before and during the meeting. Can be used with either the SMART Board or the Rear Projection SMART Board for meetings or classroom situations. Can project any image onto the four-foot by three-foot touch sensitive electronic whiteboard, allowing users to press on the whiteboard to interact with live applications.

Compatible with: Windows 3.X
RAM required: 4 MB
Disk storage required: 3 MB
Network compatibility: Novell; NetBIOS; Banyan; TCP/IP; SPX/IPX
Customer support: tech support via on-line access
Site licensing is available

Appendix M: DoD Directive C-5200.5, Para D-Communications Policy for the Department of Defense

Paragraph D. Policy

Information transmitted by communications systems is highly susceptible to interception, technical exploitation, the human intelligence (HUMINT) threat, and other dimensions of the foreign intelligence threat. Security (Information Protection) is a vital element of the effectiveness of national security activities and defense preparedness. Ensuring the security and protection of telecommunications systems that transmit classified and sensitive information is a national responsibility. Therefore, it is DoD policy that:

1. Classified national security information shall be transmitted only by secure means. Sensitive information shall be protected during transmission to the level of risk and the magnitude of loss or harm that could result from disclosure, loss, misuse, alteration, destruction or non-availability. The sensitive information to be protected, considering the level of risk and the magnitude of loss or harm, shall be determined by the cognizant DoD Component head or designated representative.

2. Only National Security Agency (NSA)-endorsed COMSEC products and services shall be used to secure classified telecommunications of DoD Components and their contractors.

3. Only NSA-endorsed COMSEC products, techniques, and protected services shall be used to protect sensitive telecommunications involving activities of DoD Components and their contractors delineated by 10 U.S.C. 2315.

4. Sensitive information subject to the P.L. 100-235 may be protected during transmission, at the discretion of the DoD Component, by products validated by the National institute of Standards and Technology as meeting the criteria of applicable Federal Information Processing Standards or by NSA-endorsed COMSEC products, techniques, and protected services.

5. Telecommunications systems that transmit a mix of classified and sensitive information shall be secured as described in subsection D.2, above. Systems that transmit a mix of sensitive information delineated by reference 10 U.S.C. 2315 and subject to DoD Directive 5220.22, "DoD Industrial Security Program," December 8, 1980 shall be protected as described in subsection D.3., above.

6. COMSEC requirements are an integral part of program planning for all telecommunications systems, including those integral to weapons systems and weapon support systems, and shall be addressed throughout the system life cycle (e.g., concept definition, design and development, test and evaluation (T&E), procurement, installation, operation,

maintenance, and disposal). Systems planning minimally shall include threat analysis and vulnerability assessments to support operational requirements, to establish resource allocation priorities, and to establish and satisfy requirements for countermeasures. New initiatives for the development of telecommunications systems shall be performed in accordance with appropriate classification guidelines.

7. Security and education programs administered by the Department of Defense for both Government and Government contractor employees shall stress the threat to communications and the measures available to counter that threat.

8. DoD Components shall acquire COMSEC products and services through the NSA as the centralized COMSEC acquisition authority or, if unavailable through centralized procurement, acquire COMSEC products and services directly from commercial entities authorized by the NSA to sell such products and services. Direct acquisition may be done individually by a DoD Component or by a lead Service or activity acting as centralized procurement authority for others.

9. To ensure operational availability of commonly used COMSEC equipment during crisis or contingencies, the Director, NSA (DIRNSA), shall operate the COMSEC Utility Program-a rotatable pool of COMSEC equipment, which shall be sold or loaded to users having an urgent requirement for COMSEC protection that was not budgeted or programmed.

10. Efforts to maximize the use of embedded cryptography and to develop a variety of easily obtainable, cost-effective, and user-oriented COMSEC products, systems, and services shall be actively encouraged and supported.

11. When requested to do so, the DIRNSA shall provide COMSEC assistance to other Federal Agencies and their contractors to determine the foreign intelligence threat to and vulnerability of telecommunications systems and to formulate strategies and measures for providing security.

12. Telecommunications systems of DoD Components and their contractors shall be assessed for threat and vulnerability.