ACSC/DEA/205/95-05

THE NEXT GENERATION MUNITIONS HANDLER PROTOTYPE ACQUISITION CAMPAIGN: TARGETS & COURSES OF ACTION

A Research Paper

Presented To

The Directorate of Research

Air Command and Staff College

DISTRIBUTION STATEMENT A
Approved for public release;
Distribution Unlimited

In Partial Fulfillment of the Graduation Requirements of ACSC

by

Major Michael B. Leahy Jr., Ph.D.
Major Neil Hamill

May 1995

DTIC QUALITY INSPECTED 3

19970808 082

New Text Document.txt

07 August 1997

This paper was downloaded from the Internet.

Distribution Statement A: Approved for public release;
distribution is unlimited.

POC: Air Command and Staff College
Air University
Maxwell AFB, AL

Disclaimer

The views expressed in this academic research paper are those of the authors and do not reflect the official policy or position of the U.S. Government or the Department of Defense.

Preface

In his opening round of lectures, Col. John Warden proclaimed that the principles of the air campaign planning process taught at ACSC are directly applicable to a wide variety of non flying endeavors. We decided to put that statement to the test. Coming from a robotics background, the natural test case was the development of some type of robotic system acquisition campaign. The logical specific robotic system to focus on was the Next Generation Munitions Handler (NGMH).

Planning an NGMH acquisition campaign would not be just an academic exercise. At the initiation of this research enterprise, the current NGMH undertaking was in the middle of a detailed conceptual design study. The basic framework for a multi-year Advanced Technology Demonstrator (ATD) program was in place, but acquisition planning had not progressed beyond that stage. We also knew that existing program managers would be receptive to our findings since Major Leahy had a working relationship with all the major players, and was a guiding force in the creation of the current NGMH ATD program.

Planning a full acquisition campaign from milestone zero to a fielded system is beyond the time and talents of two ACSC students. The project sponsors were also not interested in planning that far afield. The specific portion of the acquisition process they were interested in planning, was how to get from the conceptual ATD design (where they were) to a program for developing a full commercially supported prototype (5 years down

the road). However, they lacked the time and expertise to conduct the necessary research. Therefore, we concentrated on applying air campaign concepts to prototype acquisition.

An operational level center of gravity (COG) analysis is arguably the most important step in the campaign process. However, that was not the main emphasis of this research report. A comprehensive five ring analysis was not required or conducted. Prior to the inception of this project the major impediments to a full prototype acquisition were well known. A technology roadmap was needed to identify the critical technologies and define a path to achieve them. A dual use business case would identify potential military and civilian uses for those technologies that justify their research and development costs. Removal of those two impediments was within the scope of a small ACSC research team.

From a five ring analysis viewpoint of the acquisition process, development of a critical technology roadmap and a dual use business case analysis, are the COGs in the systems essentials ring. Our task was to conduct an intelligence preparation of the battlefield sufficient to support selection of specific targets and recommend course of action (COA) against those COGs. The tactical level planning that would result in the equivalent of a master attack plan and air tasking order (milestone planning and statement of work) is the purview of the operators who will hopefully execute the recommended COAs.

We are pleased to report that the basic tenets of air campaign planning provide a useful framework for conducting the deliberate planning required to commence an acquisition campaign. Our comprehensive intelligence analysis of the technology battlefield supported the creation of detailed COAs for the critical technology roadmap. We completely accomplished our objective in that area. However, the dual use business

case analysis was not as thorough as originally envisioned. As with most research projects, our initial vision was too aggressive for the time allotted. While the business case analysis is not complete, it does represent an invaluable start to the full development necessary to effectively attack that COG. As an additional benefit, the first chapter preserves the history of the NGMH program to replace the corporate memory that has, and will, PCS in the near future.

This project would not have been possible without the support of many people. SMSgt Tom Turner from the Munitions Material Handling Equipment focal point provided the funding essential to attend the NMGH ATD Critical Design Review and Advanced Research Project Agency Taskable Machines Workshop. Tom has been a driving force from the beginning of the current robotic munitions loader program. Captain Brian Cassiday and Lt. George Koury, from the Robotics and Automation Center of Excellence, answered our seemingly endless requests for detailed information. We hope our results RACE to win the NGMH acquisition campaign that it will be responsible for waging in the coming years. Dr. Francois Pin's consul and insights helped keep the technology roadmap on track, and made sure we had the latest information on the current Oak Ridge National Laboratory NGMH ATD design efforts. We hope your ATD design is funded to completion and that ORNL plays a leading role in the basic research portion of the prototype acquisition campaign. Major Paul Whalen provided a detailed technical review of the document. Major Marie Morgan kept our research on track and hopefully within the acceptable bounds of an ACSC research project. Finally, we thank our families for putting up with the time demands, and look forward to a return to a more normal life where the weekends are not just two more working days until Monday.

Table of Contents

PREFACE ii

LIST OF FIGURES vii

LIST OF TABLES viii

ABSTRACT ix

CHAPTER 1: INTRODUCTION 1

- Motivation 1
- Background 1
- Objective 16
- Problem Statement 17
- Scope 17
- Organization 18

CHAPTER 2: INTELLIGENCE PREPARATION OF THE TECHNOLOGY BATTLEFIELD 19

- Critical Technologies Definition 20
- Control 24
- Hydraulic Actuation Systems 40
- Sensors 45
- Omnidirectional Mobility Platform 51
- Human Machine Interface (HMI) 58
- Summary 61

CHAPTER 3: TECHNOLOGY TARGETS AND COURSES OF ACTION 65

- Critical Technology Targets 65
- Courses of Action 67
- Summary 80

CHAPTER 4: DUAL USE BUSINESS CASE ANALYSIS 81

- Munitions Handling 82
- Military Applications 83
- Commercial Applications 88
- Summary 94

CHAPTER 5: CONCLUSIONS AND FUTURE DIRECTIONS 96

- Summary of Results 96
- Future Directions 100

BIBLIOGRAPHY 116

VITA 123

List of Figures

Figure 1: MJ-1 Jammer 4

Figure 2: BRU 48 Bomb Rack 6

Figure 3: Jammer with Missile 7

Figure 4: AMRAAM Missile Body 8

Figure 5: LAU-128 Launcher 9

Figure 6: Artist Rendition of CED Concept 13

Figure 7: ORNL NGMH ATD Design 15

Figure 8: MaxWheel Design 54

Figure 9: Basic Universal Wheel Concept 56

Figure 10: Lateral OW Concept 57

List of Tables

Table 1: A Comparison of Omniwheel Technologies 53

Abstract

The Air Force will improve the quality of the aircraft munitions loading process by fielding a new generation of munition handling equipment that incorporates emerging telerobotics technology. An active program is underway to develop an Next Generation Munitions Handler (NGMH) Advanced Technology Demonstrator (ATD). This project uses air campaign planning principals to address the development of the technology roadmap and dual use business case study required to transition the ATD into a full-scale prototype. A discussion of the history and performance requirements for telerobotic munition handling is provided as a background for creation of an initial critical technologies list. The maturity level and validity of that list is investigated through an intelligence preparation operation that supports the election of nine specific technology targets. Courses of action to bring those technologies to commercial-off-the-shelf availability are explored. Scenarios for technology application in a range of alternative military and commercial applications lay the groundwork for development of a dual use business case. Civilian industry coalition partners were identified. Creation of a full scale NGMH prototype acquisition campaign is now possible.

THE NEXT GENERATION MUNITIONS HANDLER PROTOTYPE ACQUISITION CAMPAIGN: TARGETS & COURSES OF ACTION

Chapter 1: Introduction

Motivation

Munitions are currently loaded on Air Force fighter aircraft using 1950's technology. These labor intensive methods, while adequate for a second wave forward deployed military, are not optimal for supporting global reach global power projection into the 21st century. The solution lies in the incorporation of emerging telerobotics technology into the munitions handling process. The motivation for this research is the continued development and eventual fielding of a next generation munitions handler prototype.

Background

The Air Force has an ongoing program to determine the feasibility of significantly enhancing the capabilities of munitions handling equipment by incorporating emerging telerobotic technologies into a new system design. The Air Force Material Command (AFMC) Robotics and Automation Center of Excellence (RACE) at Kelly AFB TX is providing technical direction for the design and development of the Next Generation

Munitions Handler (NGMH) Advanced Technology Demonstrator (ATD).[1] The project has been sponsored by the Munitions Material Handling Equipment (MMHE) focal point out of Eglin AFB. Detailed conceptual design studies were performed by a team from Oak Ridge National Laboratory (ORNL). The performance requirements generated by the RACE/MMHE/ORNL team serve as the jumping off point for this research effort.

Appreciation of those performance requirements demands a solid understanding of the current munitions loading process. The complete weapons loading procedure sequences through five basic operations:

1. munition build up and trailer loading,
2. transportation to the flightline,
3. preparation of receiving stations (racks and launchers),
4. loading, and
5. final hook-up.

The processes involved in munition buildup, station preparation, and final hook-up require a level of human dexterity that exceeds the capabilities of emerging technology. Loading is the most time consuming operation with the largest fraction of crew size. The NGMH program is addressing the process of loading munitions onto the current and future fighter inventory of the Air Combat Command (ACC). Complete details for the loading procedure can be found in the appropriate technical orders.[2] The description that follows is based on personal observation and interviews with crew members performing Integrated Combat Turns (ICTs)[3], and a preprint of a RACE report.[4] The objective is to provide a top level overview of the process with emphasis on the aspects that make munitions loading a challenging opportunity for the introduction of new technology.

An ICT comprises the set of actions required to quickly recover and relaunch a fighter aircraft. Assuming a healthy aircraft, munitions loading is the most physically

demanding and time consuming portion of the combat turn. The ICT is performed within the confined space of hardened aircraft shelters or within a similar sized area on the open flightline. All the munitions are arrayed on munitions trailers at predefined points around the perimeter. The trailers are used to transport the munitions from the bomb build-up area, where all procedures necessary prior to loading are accomplished, and provide easy access for the load crew.

A load crew consists of three highly-trained individuals. Their primary piece of equipment is the MJ-1A/B Aerial Stores Lift Truck, commonly referred to as the "jammer". The jammer was originally developed in the 1950s and is the standard piece of Air Force equipment used for loading munitions weighing up to 2,500 lbs along with a host of other miscellaneous lifting tasks around the bomb dump and the flightline.[5] A line drawing of the jammer is shown in Figure 1. The MJ-1 is a diesel powered, self-propelled vehicle that houses the hydraulic arm used to perform the heavy lifting required for munitions transportation and loading. At the end of the arm is a loading table that is rapidly reconfigurable for bombs or missiles. One crew member drives the jammer while the other two assist in the installation actions and perform safety checks. The driver controls the direction and speed of the platform, along with the height of the lifting arm, from the driver's seat. An additional set of arm controls is provided near the loading table for use in final alignment. Acquiring the bomb or missile from the trailer is where employment of the jammer becomes acute.

The munitions loading operation is further subdivided into two broad categories: missile or bomb attachment. The first noticeable difference between the categories is in the configuration of the table at the end of the jammer's hydraulic arm. For bombs, the

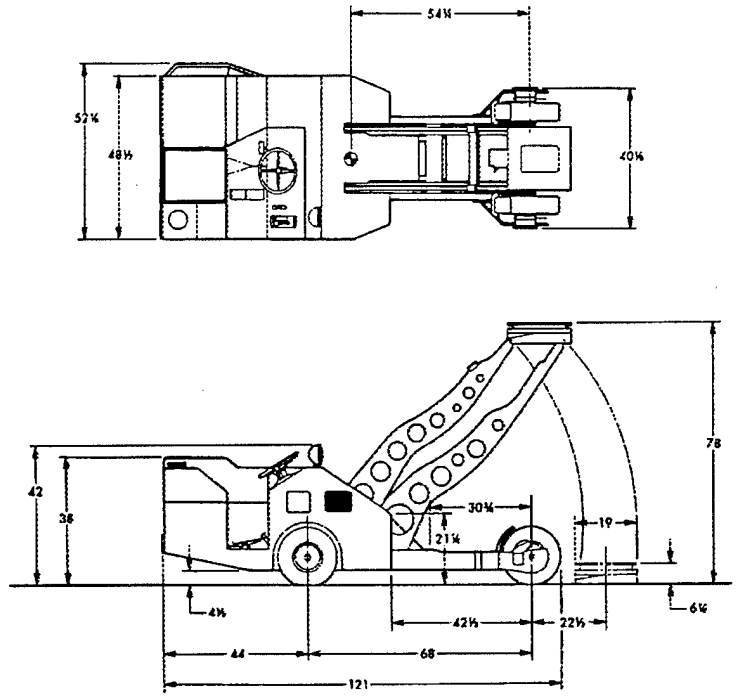

Source: Ground Support Equipment for Aerial Stores Handling and Aircraft Maintenance. Engineering Specifications, Issue No. XVI, Dallas, TX: Standard Manufacturing Company, Inc., 1990.

Figure 1: MJ-1 Jammer

jammer's end effector is a set of four rollers which provide the operator with an additional rolling degree-of-freedom (DOF) along the axis of the bomb that is crucial for the final alignment of the lugs and bomb rack. Each bomb has a set of suspension lugs which are mated to a set of latches in the bomb rack. The lugs are on either side of the bomb's center of gravity, with 14 or 30 inch spacing depending on the munition weight.[6]

There are two basic types of bomb racks in the inventory.[7] Figure 2 illustrates a BRU 48. Bomb rack location and configuration is a function of the specific airframe. The basic problem remains how to quickly transport the bomb from the trailer to the vicinity

of the rack and then perform the mating. Understanding the loading process is critical to defining jammer performance specifications.

The bomb loading operation starts when the jammer driver positions the end-effector under the desired bomb on the trailer. One of the other crew members is usually close to the bomb to provide the visual feedback the driver needs for precise pick-up positioning. Once the bomb is acquired by the jammer, the munition is rapidly moved into the vicinity of the specific bomb rack. The additional crew member walks alongside the bomb to ensure safety. The driver raises the munition to within about a foot of the rack and strives to coarsely align the suspension lugs with the rack latches. Final alignment is then performed by the second crew member using the single DOF controls at the end of the hydraulic arm. Once the bomb is latched, the driver pulls away to acquire another munition while the other crew members perform the final hook-up operation. A skilled crew makes this procedure look simple, but observation of trainees shows that the process is really quite complex. Even the best of crews remarked that proficiency degrades rapidly in the absence of constant training, and bomb loading is easy compared to installing missiles.[8]

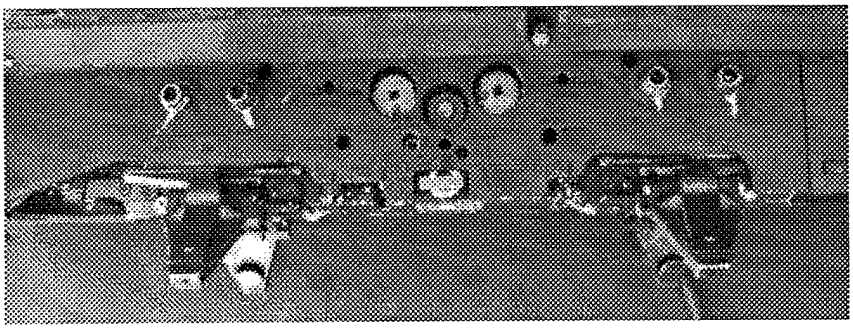

Figure 2: BRU 48 Bomb Rack

The initial phase of heavy missile loading is almost identical to the transportation and coarse alignment procedures for bomb attachment. The main difference is that the four rollers on the end-of-arm loading table are replaced with a three DOF device called the OSLA. The OSLA is basically a fancy C-clamp attached to a slider that permits the missile to be rotated over 120 degrees and translated roughly six inches along its axis. The OSLA end-effector allows the missile to be removed from the trailer without putting any weight on the wave guide, while also keeping the attachment points free for final alignment and installation.[9] Figure 3 shows an Advanced Medium Range Air to Air Missile (AMRAAM) attached to the jammer.[10] The Velcro strap around the missile body is especially significant. This is a safety precaution to prevent the missile from falling out of the clamp. As an additional safety precaution an operator walks alongside the missile to insure it does not fall out of the end-effector or hit any obstacles on the way to the launcher rail. The process of attaching the missile to a pylon-mounted launcher is the most complex portion of the ICT.

There are two main differences between bomb and missile installation that significantly alter the loading operation. While the bomb loading process is primarily performed in the vertical plane, missiles are attached to launchers in a horizontal plane. To

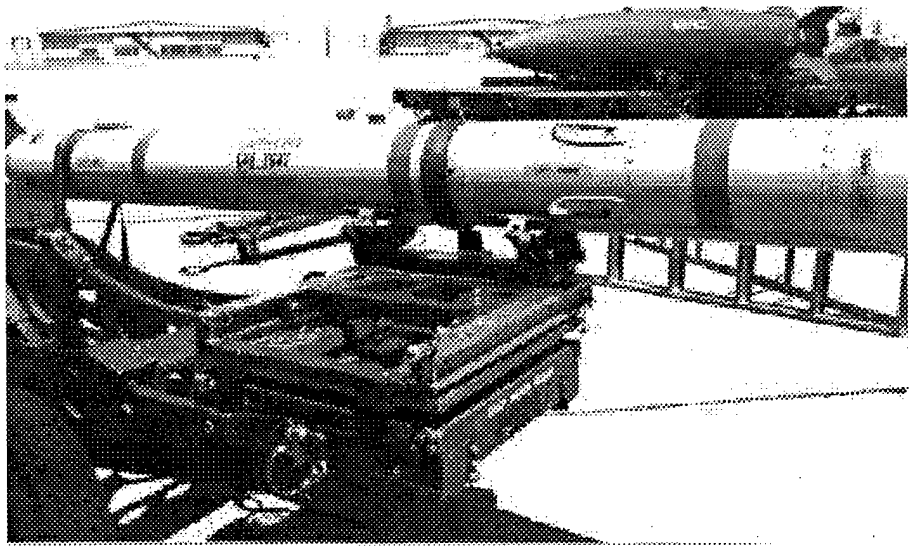

Figure 3: Jammer with Missile

further complicate the procedure, attachment is no longer a simple process of aligning lugs and latches. The missile installation procedure is specific to the launcher that the munition is being loaded on. To accommodate the design restrictions for several different type of launchers[11], missiles have three attachment points as illustrated by the AMRAAM in Figure 4. Installation requires aligning at least two of the three lugs with the appropriate rail attach points and inserting the lugs. Several launchers also require the additional step of sliding the inserted missile along the rail to lock it into place.

The salient features of the missile loading procedure are best illustrated by a specific munition and launcher combination. Mating an AMRAAM to the LAU-128 launcher shown in Figure 5 is representative.[12] The task is to align the missile and rack such that the rectangular lug to the right of the C/G (center of gravity) in Figure 4 can slide along the inside rail of the launcher while the attachment points to the left of the C/G slides along the outer rail. Very tight tolerances, and launcher rails that are usually not parallel to the ground, add to the alignment difficulty. As a further complication, the

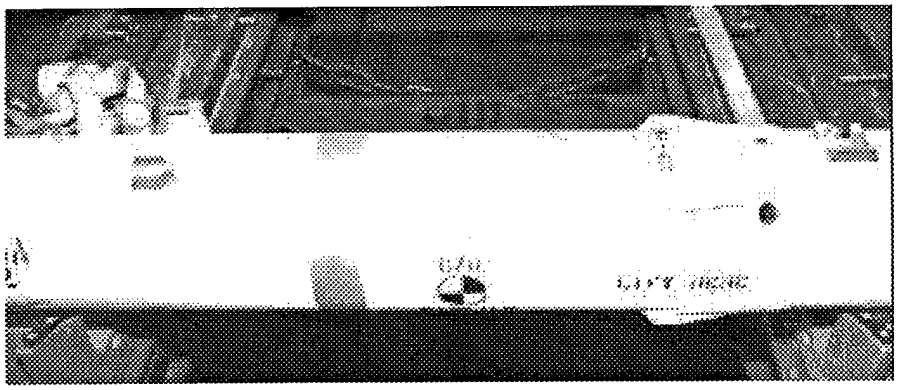

Figure 4: AMRAAM Missile Body

operator's view of the launcher is occluded by the missile. It is not uncommon for all three crew members to be involved in a missile load. The driver remains seated, the second member works the table-mounted controls and the third is under and behind the launcher helping to provide verbal terminal guidance instructions. A small misalignment in missile pitch or roll prevents the missile from sliding into place, and probably results in the crew backing up and restarting the final alignment procedure.

A further testament to the difficulty of the current jammer-assisted missile loading operation is that crews load AIM-9 missiles without it. The AIM-9 is transported from the trailer and installed without any mechanical assistance. The three crew members carry the missile to the rack and then lift it over their heads to perform the installation. During the installation, the operator in the middle, provides the feedback to the other airmen to achieve the necessary motion sequence. While this missile weighs under 200 lbs, a full day of loading and/or short crew members make this a very demanding operation.

The Air Force has effectively used these same basic loading operations for over 20 years. The dexterity, speed, and adaptability requirements for the numerous rack preparation and final munition hook-up, that were only hinted at in the previous

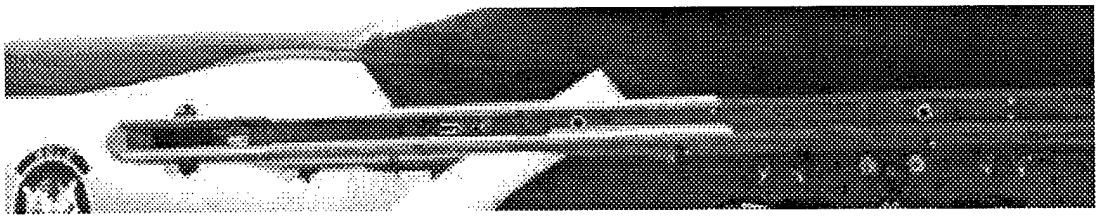

Figure 5: LAU-128 Launcher

paragraphs, form a very demanding automation problem. Full automation requires that the system be designed from the start with that in mind. Even the F-22 was not designed for fully autonomous munitions loading.[13] Therefore, from a technology standpoint, to say nothing of operator acceptance, talking about full automation prior to 2020 is a waste of time. However, the concept of an advanced jammer that utilizes robotic technology has not gone unexplored.

The first official analysis of the technology requirements for a robotic munitions handling device was conducted by members of the Committee on Advanced Robotics for Air Force Operations, Air Force Studies Board, Commission on Engineering and Technical Systems under the National Research Council. In 1987 General Randolph, then commander of Air Force Systems Command, commissioned the Air Force Studies Board to:

- evaluate current and potential uses of advanced robotic systems,
- recommend the most effective applications, and
- identify high payoff areas for research and development.[14]

The results from that contract were published in early 1989 in a report entitled "Advanced Robotics for Air Force Operations".[15] That report was not a detailed analysis, but rather a compilation of the projects and conceptual studies then on-going across the Air Force.

In the late 1980s a small group at the Wright Aeronautical Laboratories was charged with exploring concepts for aircraft refueling and rearming. Their rearming concept was centered around a completely autonomous system which employed an overhead gantry robot to load wingtip missiles. That concept never went beyond a toy robot mock-up, for reasons that more detailed research would make abundantly clear. However, the basic idea of using robots in the munitions handling task was one of the applications recommended by the studies board. The concept was in play.

The concept of robotic munitions handling lay dormant for several years. No operational command champion emerged and laboratory energies moved onto other problems. However, the fortunate confluence of three previously independent actions produced a resurrection during the fall of 1993. The Munitions Material Handling Equipment (MMHE) focal point at Eglin AFB, under direction from the Air Combat Command (ACC), was spearheading efforts to enhance munitions handling operations through the use of modified procedures and improved equipment. One of their avenues of investigation was the application of robotics to munitions handling. Advances in telerobotics were convincing an expanding audience that those technologies were no longer restricted to space, nuclear, and underwater applications.[16] Finally, the Air Force Material Command (AFMC) Robotics and Automation Center of Excellence (RACE) was actively championing the application of telerobotics to depot problems.[17] An informal contact between old friends at RACE and MMHE produced the alliance of operator, customer, and technologist necessary for the successful development of new system concepts. That relationship was formalized by a Memorandum of Understanding in April 1994.[18]

The first product of that alliance was an engineering study by the University of Utah Center for Engineering Design (CED).[19] The MMHE focal point had entered into this contract prior to aligning with RACE, but RACE played an active role at the kick-off and final meetings. By design, the CED project was done at a very high level. The study participants had broad expertise in robotics and teleoperation and made several trips to witness flightline munitions handling. Their task was to determine the theoretical feasibility of reducing load crew size by application of robotic technology. Full automation was ruled out early on, and the emphasis shifted to analyzing different concepts for enhancing jammer performance.

The current jammer is the bottleneck, or center of gravity, in enhancing the effectiveness of a munitions load crew. The MJ-1 imposes an artificial division of labor. The skills necessary to rapidly transport the munition and perform an optimal coarse alignment are independent of those required for fine alignment and insertion. In addition, only the driver retains control of the gross motion DOF. If the coarse alignment is not accurate, the crew member attempting the fine alignment must signal for the driver to provide the required motion. If the coarse position is adequate, the driver is reduced to a safety observer for the balance of that individual munition loading process.

The MJ-1 provides a minimal amount of operator feedback. The load crew is unable to sense the forces being exerted on the weapon and must adjust the alignment based strictly on vision. When vision is obstructed, as with the missile launcher alignment, the efficiency of the process is dramatically reduced. A second major limitation is the inability to coordinate joint motions. All motion is accomplished through separate actuation of each individual joint. Unfortunately, joint motion doesn't directly correspond

to motion in cartesian space.[20] For instance, movement of a single jammer arm joint doesn't correspond to pure vertical motion. Converting desired changes in cartesian space into joint motions is not an intuitive process. Miscalculations result in misalignment and/or binding. The inability to intuitively align the munition also leads to the requirement for another set of hands and eyes to help with the process.

To eliminate the current jammer deficiencies the CED team evaluated two operator augmentation concepts. The common premise was to give a single crew member direct control over both the fine and coarse positioning of the munition in cartesian space, thereby eliminating the requirement for a dedicated driver. A preliminary concept trade-off analysis eliminated any exoskeleton designs. The resulting recommendation was for a teleoperated mobile platform with a hydraulic arm. An artist's rendition of the concept is shown in Figure 6. Under this approach, the system automatically compensates for the weight of the munition and slaves the arm and platform motion to inputs from a force reflecting joystick mounted near the end-effector. The system, not the operator, performs the cartesian to joint space mapping. Pushing up on the joystick causes the arm to follow. Final munition alignment is performed either automatically or via teleoperation. Their concept illustrated the potential for emerging telerobotic technologies to reduce crew size and individual airman workload through enhanced human-machine synergy. The CED report concluded with a recommendation and timeline for a complete prototype development.

The CED report was sufficient to convince the ACC headquarters logistics component to support further research. ACC is very interested in reducing the crew size, workload, and time required to perform an ICT. Maintaining load crew proficiency during

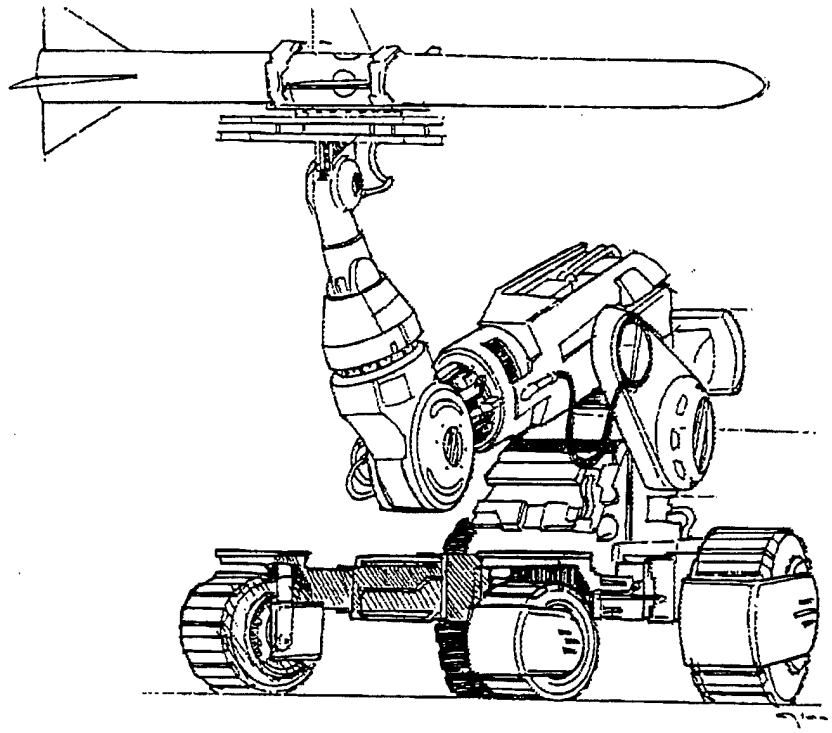

Source: University of Utah Center for Engineering Design. Robotics Applications to Munitions Operations. Final Report, February 1994

Figure 6: Artist Rendition of CED Concept

peace time is difficult and costly. In an era of doing more with less, a new jammer that allows the task to be performed more expediently and with less personnel is becoming a necessity. The performance requirements mandated by ACC were that the new jammer allow load crew size to be reduced to two personnel without a loss of efficiency, or an increase in airlift or logistics support.

MMHE and RACE decided that the next step was the development of a Next Generation Munitions Handler (NGMH) Advanced Technology Prototype (ATD). While the CED report indicated that the methodologies would be available for a prototype, there is a significant level of research and development necessary to transition methodologies into COTS solutions. The RACE/MMHE team also realized that raw technology was

only part of the solution. The essential question remained unanswered. What is the most efficient method for employing those technologies? An answer is necessary before committing to a full prototype.

The NGMH ATD is focused on providing the means for the current load crews to answer that question. Load crew feedback and comments are critical to successful prototype design. Only the operators know all the nuances of their jobs. The only realistic way to acquire their feedback is to provide a demonstrator that they can literally play with. That demonstrator must be flexible enough to allow the evaluation of a wide range of possible solutions. The ATD must be manufactured with the intent of demonstrating the benefits of embracing the new technology, not the usefulness of a particular system design. Based on those requirements the Air Force entered into a joint development effort with Oak Ridge National Laboratory (ORNL) to develop the NGMH ATD.[21]

The RACE/ORNL relationship was formalized with a Department of Energy project proposal in the late spring of 1994.[22] In May, ORNL was awarded $550,000 to develop a detailed conceptual design for the ATD manipulator, human interface, control system, and mobility platform. The MMHE focal point, under the guidance of HQ ACC, had overall program management responsibility and provided the funding. The RACE provided overall control of engineering and technical requirements as well as providing simulation support. The conceptual design phase of the ATD concentrated on development of a systems concept that incorporates the suite of telerobotics technologies necessary to determine the optimal mechanical and human interface configurations. The preliminary and critical design reviews (PDR/CDR) were held in December 1994 and

January 1995, respectively. ORNL turned the artist drawings of the CED into the thoroughly analyzed and simulated comprehensive design shown in Figure 7.[23] The detailed understanding of the performance requirements generated by the ORNL team provides the baseline for the research conducted in Chapter Two. The final CDR report is

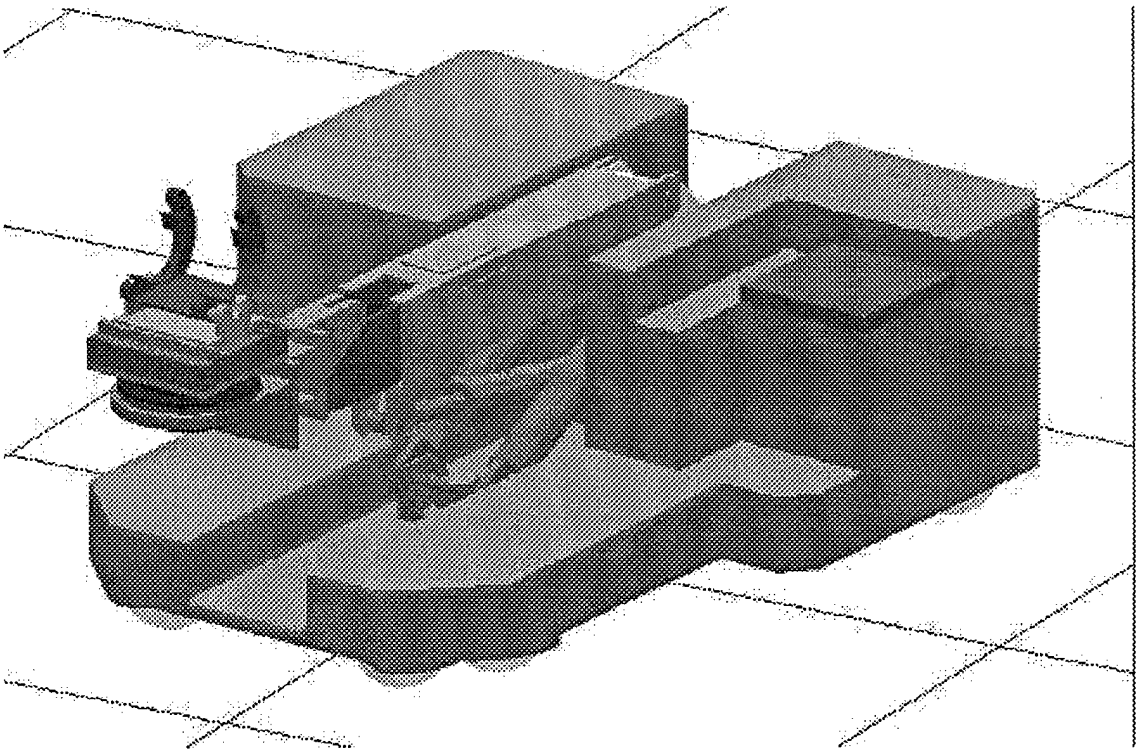

Source: NGMH ATD CDR, Oak Ridge TN, January 1995.

Figure 7: ORNL NGMH ATD Design

being written concurrent with this thesis project report.

The NGMH ATD program will ascertain the feasibility of reducing load crew size by use of a telerobotic MMHE system. Assuming that the NGMH ATD is successful, ACC will want to procure hundreds of these telerobotic systems. The next step in the

acquisition process is contracting for a full scale prototype development. However, there are two major impediments that must be removed. Current acquisition policy stresses utilization of commercial off the shelf (COTS) technology. The NGMH ATD will push the technology envelope. A subset of the requirements for a robust prototype capable of all weather operation are outside that envelope. The basic and applied research requirements, and transition from the laboratory to commercial product, will not be completed without a dedicated research and development program. Given the current political and economic climate, and the user requirement for high reliability and maintainability, a traditional full-scale development plan for a piece of specific military equipment is unfeasible. A dual use research and development program must be conducted. Creating the proper project team requires rigorous investigation into the dual use potential of the NGMH system and/or component technologies. A compelling business case for both military and civilian applications is the second major impediment. The RACE/MMHE team recognized those problems and commissioned this study.

Objective

The objective of this research is to provide the sponsors with the critical technology development roadmap and business case analysis necessary to support an acquisition campaign whose end-state is a commercial-off-the-shelf (COTS) telerobotic system that provides the mobility and dexterous manipulation necessary to reduce combat aircraft munitions load crew size to two individuals.

Problem Statement

The principles of air campaign planning provide a framework for planning a next generation munitions handler prototype acquisition campaign. Under that framework, development of a critical technology roadmap and a dual use business case analysis are considered two acquisition process system essential COGs. The problem was to identify the specific target subsets of those COGs and to recommend courses of action (COAs) that would produce the effects necessary to support the objective.

Scope

The performance requirements validated at the NGMH ATD PDR are the focus for the intelligence gathering in Chapter Two. An exhaustive search for every possible military and dual use application was not the goal of the business case developed in Chapter Three. That development focused on identifying scenarios where utilization of the telerobotic system would significantly reduce man-hours and/or improve process quality. The search was concluded once sufficient applications have been found to justify the development costs. The time frame constraint imposed on the campaign process is a maximum of five years. The Advanced Research Project Agency (ARPA) (one of the potential program sponsors) tailors all new research and development plans within that time frame. A large list of government and commercial concerns are involved in telerobotics. Due to time and resource constraints, we concentrated our collaborative efforts with those agencies already involved with our sponsors.

Organization

This report consists of five chapters organized as follows: Chapter Two presents the intelligence preparation of the technology battlefield. After a brief overview the performance requirements that produce the critical technologies list are reviewed. The maturity level and validity of the initial critical technology list is then investigated through a literature search that supports the selection of specific technology targets. Chapter Three lists those specific targets and recommends courses of action for developing the target technology. Chapter Four presents the military and dual use business cases. A brief description of the application is followed by the development of a scenario and resultant cost analysis for utilizing an NGMH compatible system. Specific high value targets and recommended courses of action are provided. Finally, Chapter Five summarizes the results and provides recommendations for future acquisition actions.

Chapter 2: Intelligence Preparation of the Technology Battlefield

A crucial phase in any campaign is "getting smart" about the enemy. Intelligence gathering is the knowledge warrior's key to victory.[24] Army manual FM100-5 calls this process intelligence preparation of the battlefield.[25] An identified COG of the NGMH prototype acquisition campaign is the development of a critical technology roadmap. Therefore, the objective of this chapter is to conduct intelligence preparation of the technology battlefield.

A critical technology target is defined as a set of capabilities that directly support a specific system performance requirement, and are not commercially available. The end-state of the intelligence preparation is the comprehensive understanding necessary to define the proper critical technology targets and recommend courses of action to attack those targets. To reach that end-state, a comprehensive picture of the industrial and research communities' ability to support development of the NGMH prototype was gained through a review of the current commercial state-of-the-art product specifications and recent research publications. The goal of that examination was twofold. First, determine if the critical system performance requirements are achievable with existing commercial components. Then, if the results of the commercial search are negative, seek out existing laboratory research that has the potential to meet the requirements. The starting point for this intelligence operation is the definition of the key NGMH prototype system performance requirements.

Critical Technologies Definition

We return to the Air Force Studies Board Report for the first published analysis of critical technologies for robotic munitions handling.[26] The committee members proposed a relational index for robotics technologies that postulated what level of technological evolution was required to support prototype development of their recommended applications. The technologies were divided into four main areas: computer control systems, sensor systems, actuation systems, and human interface systems. The evolution scale was divided into six graduations ranging from, existing technology is presently available with minor modification, to extensive research is required. The ravages of time and a complete change in munitions handling concept have dulled the effect of this report. Its merit is more as a historical marker than a specific roadmap. However, the belief that research and development in the four major areas was required to field a prototype system remains valid.

As mentioned in the previous chapter, the CED report was the next major landmark on the robotic munitions handler path.[27] Their conclusion, supported by the RACE staff, was that a completely autonomous solution to robotics munitions handling was not feasible within the next five years. The basic concept that emerged was a small footprint wheeled platform with a heavy lift manipulator that incorporates gravity compensation and an innovative telerobotic operator interface. The critical technology implications of that design map into the four major target areas identified by the original Air Force Studies Board report, plus a new fifth category dealing with mobility.

The major technology elements under control were architecture, algorithms, and sensor-guided assembly. A control system architecture that supports human

augmentation, i.e. various forms of what Sheridan calls shared and supervisory control[28], was obviously essential. Operating under that architecture were control algorithms that compensate for the weight of the munition and provide compliance regulation. Munitions weight (more commonly called gravity) compensation, allows the operator to grab the robot end-effector and manipulate the munition as if it were weightless. Compliance prevents the build-up of potentially damaging forces when the munition is brought into contact with the rack or launcher rail. The final subcomponent under control was sensor-guided part mating. The CED report briefly addressed the idea of having the system perform the final mating of the munition and rack. In the broader sense, this is a form of automated assembly.

The subcomponent levels of the other target areas were not as well developed, but the critical nature of each was evident. In order to lift a 2500 lb. bomb a heavy lift hydraulic manipulator is required. An effective operator interface must allow the user to literally grabs a handle on the system and drag the platform or arm into the desired position. The CED called this sophisticated form of human machine interface come-along control.[29] Creation of such an interface is essential to the objective of intuitive operator interaction with the system. Sensor-guided assembly requires small rugged devices that can operate within the electromagnetic and weather conditions of the flightline environment. Finally, in the new category of mobility, the CED concept relies on a wheeled platform that is completely self contained, i.e. provides all hydraulic, electrical and computer power. Furthermore, the platform must be small enough to get under the lowest portion of the airframe and provide a dynamic center of rotation. Dynamic center

of rotation was defined as the ability to move the base in arbitrary directions by the use of independently steerable wheels.

Those critical technology requirements were expanded and further refined during the requirements review and initial design phase of the Next Generation Munitions Handler (NGMH) Advanced Technology Demonstrator (ATD) project.[30] A more comprehensive analysis of the munitions handling problem revealed that a conventional 6 DOF manipulator is not sufficient. A redundant robot arm design, one with two extra DOF, is necessary.[31] Mounting that arm on a mobility platform results in a 10 DOF system. That system must: avoid obstacles while following an operator command motion, never allow individual joint limits to be exceeded, stay within a range of arm movement that keeps the mobility platform from tipping over, and reach all the required load points of the F-15E.[32] On-line resolution of those potentially competing stipulations requires an advanced trajectory generation algorithm resident in the control system. The control system must also: compensate for munition inertia, apply a known force to a surface, minimize impact forces and, insure a stable transition between free space and the rack or launcher surface.

The NGMH ATD also identified additional prerequisites in sensors, actuation systems, and mobility platforms. Sensor technology requirements expand to include sensing contact along the whole robot arm, and an end-effector force sensor capable of measuring all six cartesian force/torque values with high sensitivity while under heavy payload. Along with heavy lift capacity, the actuation system must provide the degree of fidelity necessary to follow the operator inputs, during the low speed final munition-to-launcher alignment and assembly process, without any noticeable delay. The ORNL

design team also suggested that the platform mobility design not be restricted to independently steerable wheels, but rather be expanded to consider all omnidirectional technologies.

In summary, by November 1994 the evolution of the robotic munitions concept had identified the following tentative list of critical technologies.

1. Control system
    - Telerobotics architecture compatible with emerging standards
    - Control algorithms for hydraulic robots
        - techniques to mask the weight and inertia of a heavy payload in the tool frame
        - techniques to minimize impact forces and guarantee quick stable transition between control modes in the contact region
        - force/torque techniques for high precision chamferless part mating of heavy payloads
    - Motion planning
        - real-time switching and blending of operator and program inputs
        - real-time constraint-switchable redundancy resolution for combined mobility and manipulation motion
2. Hydraulic actuation systems
    - high payload and small size
    - human bandwidth at low speed
    - high precision at low speed, i.e. low stiction
3. Sensors
    - force/torque device with 3000 lb. dynamic range, high sensitivity, and factor of 20 overload protection
    - robust on-the-arm proximity devices
4. Omnidirectional mobility platform
    - small footprint and volume
    - self-contained power systems
    - simultaneous rotation and translation
5. Human-machine interface
    - come-along control mode
    - on-line operator selectable degrees of autonomy
    - intuitive and robust

This list provides a focus to subsequent intelligence preparation and documentation activities. The results from those activities are presented at a level suitable for

comprehension by a robotics engineer. Other readers may wish to skip to the summary section.

Control

Intelligence gathering for this section was further subdivided into three main target areas: telerobotic architecture, control algorithms for hydraulic robots, and motion planning. Each is examined in turn.

Telerobotic Architecture. An architecture is the framework around which a control system is built. The major industrial robot manufacturers have developed powerful control architectures to support their individual product lines. However, those architectures are specifically tailored to highly automated solutions, not human augmentation.[33] Significant modifications are necessary to provide the features required to support telerobotics.[34] Therefore, attention turns to the research side of the house.

Telerobotic architectures are as numerous as the institutions that conduct telerobotics research.[35] In fact, a main obstacle to increased integration of telerobotic technology has been the lack of common standards. The resultant high cost of custom designed control systems was identified by the RACE as the prime deterrent to application of telerobotic technology to depot applications. To address that issue, the RACE is championing the development of a common architecture in the area of telerobotics through the Unified Telerobotics Architecture Project (UTAP).[36]

The UTAP is providing a standard framework of devices and interfaces which define a system capable of addressing a wide range of Air Force telerobotics applications. The architecture will eliminate much of the developmental engineering work associated

with robotic solutions, yet adherence to it will not hamper efforts to incorporate new products or technologies over the life cycle of the system. UTAP began as a study to define the functionalities required to encompass a wide range of telerobotic applications, the components necessary to build it, and a survey of the available technology. The Jet Propulsion Laboratory (JPL) telerobotics group completed what later became known as phase zero, in the fall of 1993.[37] Phase one was a collaborative effort between JPL, the National Institute of Technology (NIST) and a civilian contractor. The objective of that phase was to examine the feasibility of implementing the abstract level architecture developed in phase zero, and to develop preliminary interface specifications between all the functional blocks. NIST and JPL produced an interface document in the summer of 1994.[38] The validity of that specification was evaluated in a series of fundamental telerobotic capability demonstrations by a commercial systems integrator.[39] Phase two has been extended for FY94 with the same NIST/contractor team attempting to merge the lessons learned from the initial verification tests into a full prototype system. NIST and JPL team members are consultants to the NGMH ATD program and have attended the preliminary and critical design reviews.

Control Algorithms for Hydraulic Robots. Intelligence gathering for control algorithms address the three main performance requirements: heavy payload weight and inertia compensation, force and impact compensation, and high precision chamferless part mating of heavy payloads.

Weight and Inertia Compensation. The traditional approach to load balancing of an industrial manipulator focuses on mechanical solutions. Closed link and parallelogram mechanisms with massive counterbalances, designing the rotational axis of the third link to

pass through the link center of gravity, and spring loaded masses are some of the more popular techniques.[40] But the pendulum is swinging toward combining good mechanical design principles with more powerful controller software. Within the last ten years, dynamics compensation has transitioned from the laboratory to commercial products.[41] By incorporating robot dynamic modeling information into the feedforward control loop software, the controller compensates for inertia and known payload, thereby improving performance. The new ABB S4 QuickMove controller option incorporates on-line compensation of the full robot dynamics, including friction, to reduce cycle times by 35%.[42] While the major industrial players are concentrating on electromechanical systems, similar techniques do not enjoy wide application in electrohydraulic devices. Sephri evaluated a feedforward load compensator which used hydraulic line pressures along with the appropriate portion of the hydraulic system model to compensate for inertia and payload for a typical excavator machine.[43] But the resultant controller is not a commercial product, and his own literature search confirms the lack of depth in this area.

The critical constraint on the use of feedforward models is accurate a priori knowledge of robot and payload dynamics. If a priori information is not available, then several experimentally validated estimation and/or adaptation techniques can be applied.[44] The 1992 release of the hypermotion control option from Adept Technologies Inc. was the first commercial marketing of an adaptive control algorithm. The Sarcos General Robotic Large Arm (GRLA) brand hydraulic arm uses a form of on-line dynamics estimation to achieve payload independent gravity balancing.[45]

Force and Impact Control. The most advanced commercial form of force control is offered by Adept Technologies Inc., and their product is nothing more than a move-to-

force-limit command. However, force trajectory tracking will be the next robot control innovation to transition from the laboratory. The basics are well understood by the research community[46] and extensive experimental evaluations have been conducted.[47] General impedance control is equivalent to proportional gain explicit force control,[48] and integral force control is emerging as the consensus algorithm of choice for tracking a force profile along a stiff surface.[49] Advanced systems integrators can achieve force tracking control with current commercial control systems.[50] Release of fully embedded force control software options is anticipated within the next two years.[51] Force control has also been experimentally evaluated, on a limited scale, for both electric[52] and hydraulic redundant manipulators.[53]

Controlling the forces produced during the impact of a robot and a stiff surface is the next big hurdle. The standard engineering workaround is to approach the contract point at such slow speed that large force transients become negligible. Unfortunately, speed limits are not practical for the NGMH application.[54] Even at very slow speeds the impact force/moments between a 2000 lb. munition and an aircraft are too significant to ignore. Inserting a passive compliance device in the robot's kinematic chain is the next most common workaround. That scheme works well for a fixed low weight payload and known impact geometry, but reduces positional accuracy and mandates speed restrictions during large scale motions. More elegant alternatives have been proposed and are now under laboratory evaluation.

The first references to impact control in the robotics literature date from 1987, but research didn't really speed up until the early 1990s.[55] The first comprehensive experimental evaluation of the impact control problem was conducted at Carnegie Mellon

University (CMU).[56] A series of experiments using a direct drive arm verified their theoretical predictions. The most enduring aspect of that work was a demonstration of the discontinuous control philosophy. Discontinuous control methodology is based on the observation that no single control algorithm performs best in freespace, contact, and surface tracking. Volpe's experiments verified that switching from freespace, to impact region, to force tracking algorithms eliminates contact bouncing and provides a smooth transition to surface tracking. Force and impedance algorithms that provide acceptable tracking did not maintain contract during the impact phase. Switching to a negative proportional gain plus feedfoward force controller upon detection of impact demonstrated the best impact transient reduction. As the transients decay, a filter increases the gain on the integral force control algorithm and decreases the impact algorithm's proportional gain. The result is a smooth transition from the impact to the tracking phases. As revealing as those results were, they were performed for a very limited range of motions and impacts.

In a related work, researchers at the University of Toronto experimentally validated the theoretical result that discontinuous control is stable throughout the contact region.[57] A controller that switches from position to force control on impact is asymptotically stable. If contact is lost, the end-effector will return to the surface and reestablish contact. The experiments were accomplished using a 2-DOF direct drive arm hitting a surface whose stiffness was varied.

Another variation on the discontinuous control methodology has been proposed by McGill University.[58] A series of tests on the thumb of a Sarcos Dexterous arm (in essence a small hydraulic 3 DOF robot) showed the potential of applying Nonlinear Proportional

Derivative (NPD) methods to contact transient control. NPD is a nice intuitive concept for set point control. The key is to monitor the sign of the derivative error. If the error is moving away from the setpoint i.e. error increasing, then increase the Proportional Derivative (PD) gains. If velocity error is moving closer then do the reverse, i.e. lower the PD gains. Therefore, the formula for calculating the gains bounds them between an a priori determined minimum and maximum values. Rate of change and width of change region are modulated by user determined parameters. In theory/practice this provides more robust freespace performance than a single gain PD algorithm. That observation is not surprising given the adaptive, almost fuzzy rule, nature of this approach.

As a baseline, the researchers once again demonstrated that PD control was not stable for non-zero velocity contact. However, by switching from a PD to the NPD upon detection of a force threshold, the robot was stable in contact and the force transients were reduced in two cycles. In later tests, the PD software was replaced altogether. Now the force threshold signaled a switch between freespace and force NPD algorithms. The objective of the experimental evaluations was to grasp and hold an instrument. Surface tracking was not considered.

The Achilles heel of this approach is the requirement for calculating a derivative force error. Derivative error calculations are dramatically degraded in the presence of low resolution and high sensor noise.[59] The McGill team acknowledges those limitations, but given the demonstrated performance improvement from force error rate information, advocated better sensor techniques to clean up the signal.

Mandal and Payandeh just recently published a third variation on the discontinuous control theme.[60] Instead of switching between discrete algorithms, they proposed

maintaining a Proportional Integral Derivative (PID) formulation throughout and switching the gains. The key is a knowledge based tuning process that shifts the gains in response to changes in the environment. Their knowledge based approach is really a three phase table look-up. Based on velocity and force information, tuning rules provide an environmental classification which provides a pointer into the final look-up table. Table output is gain settings and impact switch duration.

Their approach is fundamentally sound. PID control is built into all industrial control systems. Switching the inputs to force error and setting the PD gains to zero produces an integral force controller. The PID algorithm is reduced to proportional force control with velocity damping during the contact phase. A derivative of force is never used due to noise constraints. Experiments were conducted with a 2-DOF direct drive arm against a stiff surface. The use of proportional force with velocity damping in the contact region is the real contribution of this paper.

Two other authors have also recently demonstrated the use of velocity feedback for transient damping. Li accepts the proportional force and velocity damping approach, but advocates using tip velocity directly instead of the normal process of differencing the cartesian position.[61] The well known problem with this approach is finding an accelerometer with the necessary sensitivity at low speeds. Results from a single link PUMA implementation are not conclusive.

In another set of single link experiments, a group from MIT proposes to eliminate the switching from contact to surface tracking by applying an integral force with velocity damping algorithm over both phases.[62] Once again the results are not conclusive. Application of velocity damping does improve the performance of a pure integral

controller, but large force spikes are still present. No attempt was made to contrast this approach with any others.

Motivated by finger/hand research a Stanford University team proposed using input preshaping to minimize transients during the contact phase.[63] Input preshaping is not a new concept, but this is the first application to impact control. The basic concept of input preshaping is to suppress vibration by convolving a series of impulses with the nominal controller input command. The impulses are a product of a set of linear closed loop equations and knowledge of system frequency targeted for reduction. The impulses can be calculated off-line if necessary.[64]

Experimental evaluation was conducted using a single DOF fingertip. Shaping for the dominant mode removed approximately 85% of the original vibration. Vibration suppression improved to approximately 95% when shaping was changed to the lowest secondary frequency. The method also demonstrated a low sensitivity to modeling errors. To further validate their claims, preshaping performance was compared against: discontinuous control (position then switch to force error with velocity feedback), impedance control, and nonlinear active damping. Input preshaping performed at least as well as the other methods, and has the potential to perform better in noisy environments since it doesn't rely on velocity measurements.[65]

An alternative to using control algorithms to solve the impact problem has been proposed for redundant manipulators.[66] This paper strives to validate two methods of impact reduction. The first method increases damping torques in the joints that are contributing to actual motion, i.e. net motion, while not increasing null motion torques to conserve actuator power. In the second approach the robot arm is reconfigured a priori to

reduce effective mass and increase effective damping in the impact configuration, thereby reducing impact force. The weakness of this paper is a reliance on simple 3 DOF planar simulation results, with ideal actuators and zero gravity, to validate the claims.

High Precision Chamferless Part Mating of Heavy Payloads. The fundamental NGMH performance requirement is to allow an operator to load munitions easier than with the current MJ-1. All the other control technologies are targeted to provide that capability in a teleoperated mode, i.e. the final alignment is conducted exclusively by the operator. While the envisioned teleoperated system is a significant leap forward, is that the best available? Can insertion aids be provided to the operator? To answer that question the intelligence search turns to the field of part assembly.

Flexible automated part assembly is becoming a major manufacturing research thrust.[67] Since the development of the remote center of compliance (RCC)[68] at Draper Laboratory, assembly of chamfered parts has achieved an increasing degree of maturity and acceptance on the factory floor. The current research emphasis is on higher part tolerances and reduced chamfer requirements. To meet those demands researchers are looking beyond passive aids, like the RCC, to active compliance. Admittance control is a form of active compliance that utilizes force sensor information to modify the part velocity once in contact with the assembly.[69] The key to using that form of control is the definition of the admittance matrix that maps measured force to the desired velocity. Schimmels and Peskin solved that problem for planar assembly on a frictionless surface.[70] Their work demonstrates both a technique for setting the matrix values and a test for identifying the conditions under which successful assembly is permitted. As part of the ATD phase, the ORNL team applied that procedure to a simplified mockup of the munition loading

problem. They were able to prove that automated munition assembly is theoretically possible, but requires knowledge of which bomb lug contacts first. Lug (peg) contact information is mandated by the need to switch between two admittance matrices. The single admittance matrix approach used by Schimmels and Peskin is not sufficient.

Recently, Schimmels and Peskin have extended their original work to consider the effects of friction.[71] Admittance control depends on the ability to determine geometrical contact information based solely on force data. Stated another way, a necessary condition for force assembly is that the contact forces must contain the geometrical information related to workpiece/fixture relative position error. Forces are characteristic if distinct geometrical contact conditions do not produce identical force measurements and force-assembly fails when the contact forces are no longer characteristic. The difficulty is that friction can prevent obtaining a clear picture of the geometric configuration based on force data alone. To address that situation, Schimmels and Peskin developed a procedure for defining the maximum friction value for which their admittance control force assembly approach remains valid. Those results are still limited to the planar assembly problem.

Motion Planning. The two critical target components are real-time switching and blending of operator and program inputs, and real-time constraint switchable redundancy resolution for combined mobility and manipulation motion. Each is investigated in turn.

Switching and Blending. Current industrial robot control systems are not designed to support real-time switching of operator and program inputs.[72] Those systems are designed for controlling an automated workcell. Direct operator involvement ends when the particular program sequence is selected. The only operator interaction with an

executing robot program is to hit the emergency stop button. However, these systems do permit an engineering work around. The Adept controller is used as an example.

The Adept motion control system has a command primitive that allows the blending of pre-programmed and user selected trajectory inputs.[73] The "alter" command tells the trajectory generator to sum its normal output with a vector of trajectory offsets. This capability was designed to adapt the trajectory to environmental variations detected by proximity or vision sensors. However, it also provides the means for using the Adept system in a blended input mode. The contractor validation portion of the UTAP program demonstrated that capability.[74] Operator inputs from a joystick and/or force and proximity sensors were blended and fed to the Adept controller via the alter port. The net result was an exhibition of fundamental telerobotic functions through use of commercial products.

The ability of a commercial controller to perform real-time switching was not exercised by phase two of UTAP. In theory, the alter command also supports that requirement. The real-time switching could be achieved if an auxiliary computer was used to run the switching algorithm prior to sending the resultant trajectory offsets to the Adept box. However, that is not the elegant solution possible by full development of the UTAP specification.

Redundancy Resolution. The basic problem in motion planning is how to convert a desired path in cartesian space into the series of individual joint positions (set points) required to follow that path.[75] Set-point generation is not normally performed at the servo-loop rate. A separate trajectory generation algorithm performs the detailed calculations to produce a smooth path in joint space between the set points at the servo-loop rate.

Both motion planning and trajectory generation are well understood for common industrial manipulators. All the major robot companies have elegant software solutions to this critical component.[76] However, all of those solutions are for what are commonly referred to as non-redundant robots, i.e. robots whose joint DOF do not exceed the DOF in the required path. Since the theoretical ability to reach anywhere in cartesian space only requires six robot joint DOF, the most common industrial robots have six joints. When an application requires additional DOF, the solution is to combine individual robots to obtain the required redundancy. Many industrial systems, or workcells, are redundant, but the individual mechanisms comprising those systems are not. Industrial robot control systems are designed to handle this kind of combined redundancy. For example, the FANUC Karel system provides high speed precision control of up to 16 axes, in three motion groups, with up to nine axes in a single group.[77]

The main motivation for incorporating high DOF control capability into current commercial controllers was to reduce the controller cost and footprint for volume customers. Instead of having an individual control unit for each robot mechanism, now one box can direct a multi-robot workcell. The purpose of the industrial controller motion planning algorithms is to coordinate the motion of multiple mechanisms, not to resolve the redundancy of an individual system. Where the specific performance requirements of an application exceed 6 DOF in a single mechanism, those DOF are generally partitioned, individual kinematic solutions generated, and then coordinated. The most common industrial example of a redundant system is a 6 DOF robot riding on a 1 DOF sliding platform. That system is treated as two motion groups. Another example is the large reach 9 DOF robotic paint stripping systems installed at Ogden and Warren Robins ALC.

The motion planning software divides those DOF into three groupings and performs the forward or inverse kinematic solutions on each grouping individually. The solution for the first two DOF is used as a base location for starting the kinematic solution to the next 6 DOF, and the process is repeated until all DOF are accounted for. The Large Aircraft Robotic Painting System (LARPS) being installed at Oklahoma City ALC is initially designed to use a similar motion grouping approach.[78] This ad hoc methodology, while successful for the given application, does not fully utilize the capabilities of the redundant robot, and doesn't meet the performance requirements of the 10 DOF NGMH system.

The NGMH concept is critically dependent on the operator's ability to drag the robot around by the end-effector without any joints reaching their limits, or hitting obstacles, while maximizing the stability of the platform. This level of performance necessitates a motion planning system that can resolve redundancy issues in real-time. Coordination of motion groups is not sufficient. Existing industrial robot control systems are inadequate, and there is no indication of this condition changing in the near-term. The major robot companies are concentrating on their customer's main demands: "reduced cycle times, greater product variety, smaller batch sizes and more cost effective investments", not redundancy resolution.[79] The quest for a solution turns to the research literature.

Redundancy resolution has been an active research area for many years. An excellent review of activities prior to 1990 is provided by Siciliano.[80] In that review, he identifies two basic solution categories for instantaneous or real-time control applications.

1. use the generalized inverse to determine a particular solution for a specific criterion (the pseudo inverse of the least norm of the joint velocity) then use the

self-motion to achieve a secondary criterion or cost function like obstacle avoidance, maximum manipulability etc.

2. use a set of relationships or constraints on the task to create an "augmented task space" by adding some Cartesian space variables to the system to produce a square invertable extended Jacobian

There are two main distinguishing features between these approaches. The first technique is not quaranteed to produce cyclic motion, and the second is unable to directly resolve motion in the task or cartesian space. Both cases are plagued by difficulties and/or limitations that have been well studied and documented.[81] The following two problems top the list. Method one has implicit task priority requirements (i.e. the solution can not optimize both the primary and secondary constraints/criteria simultaneously) and both methods produce "artificial" algorithmic singularities. However, these limitations have not prevented laboratory demonstrations based on these classic approaches. Our discussion centers on the most advanced experiments on mechanism that most closely resemble the NGMH kinematics.

The series of experimental evaluations that most closely resemble the NGMH kinematics have been conducted at the Jet Propulsion Laboratory (JPL). The JPL team headed by Dr. Seraji has successfully demonstrated their version of the second approach on an 8 DOF system.[82] The experimental set-up was a redundant arm mounted on a sliding rail. The Configuration Control Approach (CCA) uses a damped-least squares (DLS) algorithm to invert the extended Jacobian produced by augmenting task space.[83] The CCA is computationally efficient and allows on-line adjustments by varying the DLS coefficients. By definition DLS solutions are approximate, but robust to the singularities that can haunt other task augmentation implementations.

The configuration control method is capable of supporting automatic joint limit avoidance by adding an extra task for each joint.[84] The joint limit avoidance task is activated only when the joint violates a user selected soft limit. Once activated, the DLS weighting associated with that joint increases forcing the algorithm to accomplish the motion by use of the other joints. The additional computation burden from this feature is very light. Efficient automatic joint limit avoidance should be an NGMH requirement.

According to Seraji, configuration control also supports on-line switching between auxiliary tasks. However, to achieve that switching requires the simultaneous calculation of the complete motion resulting from employing each constraint. The constraint set is fixed prior to robot motion and can not be changed in midstream. That limitation has serious implications on computation speed. In his team's most recent evaluations, the operator was given a choice of two constraints for each extra DOF.[85] On line switching in this instance requires the calculation of four separate and distinct paths. Adding an additional constraint option for each DOF increases the computational factor from four to nine. A three option solution for each of the four redundant DOF of the ATD requires the separate calculation of 81 path solutions. The costly on-line switching ability clearly compromises the efficiency of this technique.

A research team at Oak Ridge National Laboratory (ORNL) has recently developed a new redundancy resolution paradigm that specifically addresses the on-line switching issue.[86] According to ORNL, a priori selection of redundancy criterion and constraints is inappropriate for robotic real-time control in changing environments. They propose a methodology in which the entire space of solutions is determined in a conveniently parameterized fashion. Subsequent determination of the motion path that

satisfies all the specific constraints and requirements at the particular time step, reduces to execution of a couple explicit programming steps. The Full Space Parameterization (FSP) method has replicated the performance of the classic method one algorithm in both simulation and experimentation. The most recent experiments were conducted on a 7-DOF arm. The test motions were arranged to allow evaluation with up to four degrees of redundancy.[87]

While not mandatory for the ATD, a specific criteria of a fielded NGMH system is real-time obstacle avoidance without a priori knowledge of the obstacles. The lack of prior obstacle information rules out model-based approaches[88] and mandates a sensor based design.[89] Given proper information about obstacle location, the motion planning algorithm must be able to respond accordingly. Changes in joint motions to avoid the obstacle must be transparent to the operator. Another key factor to consider is that telerobotic systems are generally driven by velocity instead of position.

The original solution to this problem was proposed by Maciejewski.[90] His approach uses a least squares solution which satisfies the end-effector velocity and then uses the redundant DOF to meet the obstacle avoidance velocity. This pseudo inverse technique falls under method one in the previously discussed redundancy resolution taxonomy. From an obstacle avoidance point of view, the main difficulties are the significant increase in computational burden with multiple obstacles, and the ability of a least square solution to force the robot into an obstacle.[91]

The Sandia National Laboratory solution to these limitations is to use sensor measurements of the perpendicular distance to the obstacle to filter the desired joint velocity.[92] The joint limit is coded as a region defined by soft and hard limits. Outside the

soft limit, the filter is set to one and therefore has no effect. At the hard limit, the filter is set to zero which effectively keeps the joint from moving any closer. In-between the soft and hard limits the filter follows a linear relationship based on the difference between the actual and soft limit joint values. Their approach was experimentally evaluated on a PUMA-560. The PUMA is not a redundant robot. They claim that extension to redundant arms simply requires that the filter values be used as weights for a weighted least squares solution. However, as with other method one approaches, this algorithm doesn't readily support switching between constraint sets.

Both the CCA and FSP redundancy resolution techniques are theoretically capable of supporting sensor driven obstacle avoidance.[93] The single obstacle avoidance capability of the CCA has been experimentally evaluated on a 7-DOF arm.[94] The obstacle avoidance potential of the FSP approach has not yet been experimentally validated.

Hydraulic Actuation Systems

The three crucial performance stipulations within this target area are: high payload and small size, high bandwidth at low speed, and high precision at low speed.

High Payload and Small Size. This performance requirement is driven by the weight of the munitions and mobility platform height and footprint constraints. Preliminary hydraulic system simulations conducted at ORNL have demonstrated that those requirements can be met with current industrial products.[95] Linear actuators are selected due to their significant weight and space advantages.[96] A line pressure of 3000 psi is mandatory to provide sufficient power density. The use of three pumps and an accumulator insures proper flow rates.

Human Bandwidth at Low Speed. The bandwidth of a system is bounded by its natural frequency.[97] A robot can not accelerate faster then its natural frequency, and good engineering practice is to operate at half that value.[98] The Sarcos Dexterous Teleoperation System (DTS) demonstrates that a hydraulic system can be built to match the bandwidth of a human operator carrying a small payload.[99] Another Sarcos manipulator, called the General Robotics Large Arm (GRLA), provides smooth teleoperated motion for payloads up to 350 lbs.[100] Both the DTS and GRLA utilize custom in-house designed actuators and servovalves. The GRLA is not capable of DTS speeds, but one doesn't want an operator whipping around a 2000 lb. munition at the same speed they wield a hammer. Given realistic acceleration limitations, the ORNL simulations predict a range of bandwidths and end-effector speeds (over 1 ft/sec) sufficient for the ATD phase.[101]

High Precision at Low Speed. The task of installing the missile onto the launcher rail is estimated to demand a level of accuracy and resolution sufficient to move the end-effector in 1 mm increments.[102] The ability to command a 1mm deflection in end-effector position, and a 0.2 degree change in orientation, translates into the capability to resolve individual joint motion of 0.0001 radian.[103] Those requirements are all the more demanding given the complex nonlinear dynamics of hydraulic actuation systems.

The general trend in industrial applications for the past ten years has been to replace hydraulic robots with electromechanical systems. Electric actuators exhibit simpler dynamics and are better understood by the current industrial control community. Therefore, as the power of electrical drives increased they were used to replace the hydraulic systems previously necessary for medium payload applications.[104] Today, no

major robot vendor supplies hydraulic robots. Several small companies cater to the undersea market where the high ambient pressures present a different set of control requirements than precision assembly. The most well know maker of hydraulic arms is Schilling. Their Titan arm is capable of carrying a 200 lb. payload at full extension, but exhibits non smooth motion outside of a deep water environment.[105] The industrial source of precision hydraulic activity is the machining industry.

Industrial machine controllers commonly utilize the following techniques to improve precision.[106] A 400 Hz dither keeps the hydraulic cylinder spool constantly moving and prevents stiction from dirt buildup. Hysteresis compensation eliminates the difference in response between extend and retract motions which arise primarily due to internal friction. Deadband compensation eliminates unpredictable valve response around the center spool position. Until recently, the majority of low level controllers were still analog. However, the pendulum is now swinging toward digital PID controllers with adjustable gains. The acceptance of digital products is not being driven by performance, but rather the ability to easily transfer control settings.[107] Properly designed analog systems provide superior performance. That is one of the main reasons that analog loops still provide the servo control for sophisticated arms like the DTS and GRLA.[108]

Utilization of adaptive control techniques to improve hydraulic system precision is still in its infancy. There is a wide body of literature on adaptive control for electromechanical systems.[109] Most of that research concentrated on improving high speed tracking accuracy by compensating for robot arm dynamics. Actuator dynamics were usually ignored. However, friction compensation (the primary source of nonlinear actuator dynamics in an electrical drive system) has also been thoroughly investigated.[110]

A major impediment in directly extending that body of knowledge is the complex nonlinear nature of the hydraulic actuator system. Unlike electrical systems, individual hydraulic actuators are not independent, but rather coupled through common pumps and accumulators. The issues of deadband and friction are also more complex. Only a single application of adaptive control to precision hydraulic movement was uncovered.

Tsao and Tomizuka applied their adaptive control technique to a single DOF hydraulic machining system.[111] They were able to improve performance by adaptively modeling some of the actuator system nonlinear dynamics. The most important observation, as anticipated, was that simply modeling arm dynamics doesn't provide high accuracy. One must compensate for all the nonlinear dynamics in a hydraulic system to ensure decent tracking accuracy. There was no direct comparison against a rival technique. Adaptive control of hydraulic arms is an immature area of study.

The alternative to advanced control technology is the design and manufacture of better actuators and servovalves. Higher performance servovalves would mimic the performance, and dynamics, of electrical systems. During a recent Stewart platform design, Salcudean evaluated several valve types.[112] Servovalves had linear response over a high bandwidth, but their 30 gallon/minute flow rate requirement was excessive. The solution was new Rexroth 4WRDE three-stage proportional values with spool position sensors. Those proportional valves provided near linear response, high bandwidth and capacity, at a reasonable cost. In addition, they were as easy to model as servovalves. Salcudean was apparently not aware of the high performance servovalve technology developed at Sarcos Research Corporation.

Sarcos Research Corporation has developed a servovalve design that provides high bandwidth response in an economical and reliable package.[113] Their innovative single stage design was created to eliminate the sources of internal friction that plague typical two state spool-type servovalves. Taking advantage of advances in rare earth magnets, Sarcos eliminates the need for hydraulic amplification of the electrical command signal, thereby removing the requirement for the second stage. Removing the second stage (spool) eliminates the main source of internal friction and also significantly reduces manufacturing complexity. Their suspension-type configuration has only one moving part and does not make contact with any internal mating surfaces, making internal stiction a non-issue. The light weight of the suspension assembly, compared to a spool, also provides an inherently higher bandwidth capability. For example, their A300H/50 valve produces a flat frequency response until 300 Hz and the 3 dB cutoff is out at 750 Hz.[114] The Sarcos valves also benefit from a host of design features that improve reliability and maintainability.

Outstanding servovalve performance is wasted if they are driving poorly designed actuators. In the design of low friction hydraulic cylinders there are two main areas of concern. Variations in both rod and piston manufacture can individually impact the overall system friction. The key to a low friction piston is reducing the friction in the rod gland, i.e. the seals. The critical node for a low friction rod is the bearings that eliminate metal to metal contact. Total cylinder seal friction is the sum of friction due to the individual sealing elements (wiper seal + rod seal + piston seal). The impact of low friction seals is more significant at higher pressures. As one might expect, friction increases with size of rod and bore diameter. The dominant factor is piston seal friction.

Ultra-low friction pistons and rods could eliminate the need for adaptive friction compensation. Hydrostatic actuators are the state-of-the-art in low friction. That performance requires a difficult manufacturing process that produces an extremely expensive product. A hydrostatic actuator sized for the NGMH lower links costs approximately $40K.[115] A standard cylinder costs around $500 and conventional low friction systems are in the $2-3K range.[116] A more significant limiting factor for an NGMH application is related to safety. Hydrostatic cylinders lose pressure and eventually collapse under payloads if the hydraulic pump fails. Salcudean's team went with low-friction Teflon seals.[117] Subsequent low pressure tests found that the low-friction seals worked very well. No sign of slip-stick motion was exhibited. Sarcos also employed carbon filled Teflon seals throughout the DTS actuators to reduce friction to approximately 10% of rated torque.[118] The ATD design will employ Parker low rod+piston cylinders.[119] Preliminary simulation results predict a system capable of 1mm relative positional accuracy.[120]

Sensors

The two critical technologies in this target area are high sensitivity heavy payload force/torque and on-the-arm proximity sensors. Each is considered in turn.

Force/Torque Sensors. A six axis force/torque sensor measures the force on three orthogonal axes and the moment (torque) about each of those axes.[121] Generally, one end of the sensor is attached to the last link of the robot and the end-effector is mounted to the other side. Due to variations in robot last link geometry, payload capacity, and end-

effector attachment points the specific design of a force sensor is tailored to the specific robot.

Force/torque sensors of various designs were common in major research laboratories by the late 1970s. Commercial versions, again primarily used in laboratories, were available in the early 1980s.[122] Today there are two major commercial vendors of robot force/torque sensors: Assurance Technologies Inc. (ATI) and JR3 Inc. Both companies offer a wide range of affordable products that are finding increasing industrial application.[123] The basic design of each vendor is investigated.

JR3's current line of sensor systems all share the same common manufacturing characteristics.[124] The signal conditioning electronics are integrated into the sensor body. The electronics suite includes: amplifiers, an analog to digital converter, an EEProm loaded with calibration data and RS-485 serial communication line drivers. The sensor outputs a serial data stream containing complete six axes force/torque data at 8 kHz. The serial data stream is interfaced to DSP-based receiver electronics available for several industry standard computer buses. The receivers provide: decoupling, coordinate transformations, low-pass filtering, vector calculation, threshold monitoring, peak capture and rate calculations. The sensor body is machined from a solid billet of aluminum. JR3 claims that the resultant monolithic structure produces a transducer with unsurpassed hysteresis and precision properties and exceptional stiffness. Metal foil strain gauges bonded to strain rings serve as the sensing elements. The company claims this arrangement produces linearity and thermal performance superior to other technologies and geometries.

The current JR3 product line does not include a sensor that meets the critical technology requirements. However, according to application engineer Wayne Johnson, they have produced standard and custom sensors with load capacities up to 25,000 lb. and 250,000 inch-pounds moment with sensor sizes ranging in diameter from 2 to 13 inches and thickness ranges from 1 to 6 inches.[125] For a single production unit the cost is estimated at $15,000.[126]

ATI does not currently stock a sensor system that meets the NGMH specifications.[127] However, like JR3, their application engineers claim that current designs can be scaled to meet the performance requirements.[128] ATI has just released a product update which keeps them competitive with JR3 in terms of data rate and standard bus interface options. The main difference between the two manufacturers is in the transducer design. The ATI resembles a six spoke aluminum wagon wheel. Only three of the spokes (beams) directly connect from the wheel wall to the hub. Silicon strain gauges mounted on those three beams measure the force/torque. Silicon gauges provide a signal 75 times stronger then conventional foil gauges resulting in an amplified signal with near-zero noise distortion. The other three spokes are overload pins which extend from the wheel wall into slots on the hub. The gap between the pin and slot determines the degree of overload protection. Torques that attempt to twist the three transducer beams beyond the maximum rating are resisted by the overload pins contacting the slots. Mechanical overload protection is a very significant design feature.

Force sensor overload protection is a critical design prerequisite. Force information is a vital input to control system safety and positioning algorithms. A deformed sensor is no longer calibrated and therefore doesn't produce accurate force

information, potentially resulting in an operator or aircraft being damaged during the next munitions load cycle. When a manufacturer claims that their sensor can withstand a specific force overload, what that really means is that the sensor will still have a linear response after the incident. But without a physical means of stopping the overload from stressing the sensor, the mechanical structure could be permanently deformed when the design limits are exceeded. Sensor deformation is not visible to the operator A diagnostic algorithm continually running in the background could trigger audible and visual warnings, but only a mechanical limit is foolproof.

Given the current commercial state-of-the-art, a sensor periodical literature search was not very fruitful. The Germans successfully demonstrated the use of telerobotics in space on a shuttle mission in 1993. The robot designed for that mission had arguably the world's most sophisticated wrist mounted sensor system.[129] The force/torque sensor was based on deflection of membranes instead of spokes and bars, had nearly perfect decoupling, and automatic temperature compensation. The sensor mechanism and electronics were on a single board with diameter smaller than a pencil.

Two other authors examined methods for improving strain gauge force sensor design. Bicchi attacked the problem of optimal placement of the gauges and showed ways to minimize the number of gauges and increase accuracy.[130] His ideas could possibly be extended to heavy payload sensors, but were only validated on a miniaturized mechanical hand fingertip. Kaneko proposed an innovative scheme to utilize existing commercial sensors and reduce the overall system complexity.[131] Sensors that only measure 3 DOF are simpler to manufacture then 6 DOF devices. Kaneko looked at ways to create a 6 DOF sensor by combining two 3 DOF devices. His resultant design used two L brackets

to position a second sensor, rotated by 90 degrees, between a normally mounted sensor and the tool mounting plate.

The well known design trade-off with strain gauge systems is sensitivity for payload. Building a high payload force sensor is not hard. Building one with high payload and sensitivity is the difficult part. One design team has proposed using the principles of magnetostrictive materials to overcome the limits of strain gauge physics.[132] The magnetostrictive force sensor is composed of two transformers with their metal cores attached to both sides of the sensor body. Changes in the material properties of the cores due to stress/strain vary the amount of flux passing between the two wire wound cores. The result is an indication of force that depends on core material, area, and number of windings. An experimental model demonstrated a large linear force operating range, but there was no mention of extending the design to also measure torques.

On the Arm Proximity Devices. In order to ensure that the NGMH manipulator arm does not inadvertently contact any obstacles (operators, aircraft, or fellow support equipment) a system of detecting and relaying proximity information is required. One of the early seminal works on that topic was by Cheung and Lumelsky.[133] They experimentally evaluated a sensor grid, or skin, that covers the upper links of a GE P-50 robot arm. The skin was composed of over 500 infra-red proximity sensors with a range of 3-10 inches. To enhance immunity to ambient light the sensor light was amplitude modulated. Time multiplexing and variations in light modulation were employed to prevent cross-talk on the same, and between links, respectively. The performance of the system was sensitive to size, color, and shape of the object. Those constraints effectively limit application to a controlled industrial setting with known obstacles and does not

provide the fidelity required for the NGMH. The most enduring aspect of this research was the use of a single detector and processing circuit for each link. Other research groups continue to refine that concept.

Driven by the requirement to insert telerobotic systems into large hazardous nuclear waste tanks, Sandia National Laboratory has been actively pursuing solutions to the whole arm obstacle avoidance problem. Their most recent results were published at the annual IEEE robotics and automation conference in May 1994.[134] That work described the second generation of their unique sensor design called the capaciflector. As the name indicates, the capaciflector uses the basic physics associated with capacitance to detect obstacles. The individual capacitive devices are arranged in a grid along the robot arm. Each capaciflector consists of two electrodes attached to a substrate which provide the capacitor dielectric constant. One electrode is driven by an oscillator while the second electrode is connected to a charge amplifier whose output voltage is proportional to the capacitance change which occurs as obstacles with different dialectic values enter the sensor's electric field. The designers claim their sensor: is insensitive to the electrical potential of an object, is not impacted by stray capacitance, and doesn't require active shielding. Sensor range is about 330 mm with a flat medal plate as the obstacle, but decreases by a factor of 10 for a 60 mm diameter steel pipe. How well the sensor would perform in a CBN flightline environment is unknown. Sandia has entered into a Cooperative Research and Development Agreement (CRADA) with Merrit Technologies to commercialize this technology.

A presentation at the NGMH CDR discussed the current progress of that commercialization program.[135] The system is being developed around a modular

architecture. Sensor nodes are grouped into bracelets. A series of bracelets are spaced along the arm as required. The whole system is interfaced to a host computer (and eventually the robot controller) via a token-ring network. The network has the capacity to support 256 bracelets and provide information to the VME bus host at 20 MHz. Each bracelet supports 31 sensor nodes via a 1 Mbps serial bus. What makes this concept viable is the use of ASIC technology to combine sensor excitation, digital signal processing, and bracket communication into a single small inexpensive sensor node. While currently focusing on capacitive sensing elements, the architecture was designed to easily accept alternative sensor modalities in dissimilar combinations. System prototypes are currently being fabricated.

The national laboratories are not the only players investigating the application of ASIC to development of sensor grids. For example, researchers at the University of Utah Microelectronics Laboratory have developed several forms of completely self contained sensor nodes using ASIC.[136] They also proposed a distributed network for integrating the nodes into a single data stream for the host computer. Sensor systems that incorporating the sensing elements and signal processing circuits on the same chip are the future.

Omnidirectional Mobility Platform

The NGMH concept relies on a wheeled platform that is completely self contained, i.e. provides all hydraulic, electrical, and computer power. Commercially available computer systems are powerful and rugged enough to support those requirements. The ORNL engineering team has identified a diesel generator design that provides the necessary electrical and hydraulic power and allows design of a platform under 30 inches

tall.[137] The only remaining research issue is selection of the means of omnidirectional locomotion.

Development of omnidirectional platforms has been an active research area for over 25 years. The resulting designs can be grouped into three categories: all-steerable-wheels (ASW), universal wheels (UV), and orthogonal wheels (OW). An overview of each technology and pointers to complete descriptions are provided. Table 1 provides a concise summary of the relative merits and limitations of each set of wheels.

The all-steerable wheel (ASW) concept has enjoyed the most commercial success. ASW is the basis for the "Synchro-Drive" mobility platforms manufactured by Cybermotion and Denning since 1984.[138] The platforms are used in a growing range of applications from security to floor cleaning.[139] Both companies use the synchronization of three powered wheels for translation and a separate "waist" axis for rotation. The separate "waist" decouples the rotational and translational motions thereby eliminating the wheel slippage and error accumulation problems commonly found in ASW platforms without waists. In the most basic ASW design, steering requires rotation of the wheels along the vertical axis. For large tires or heavy payloads, that rotation could generate serious sliding and tire wear. To reduce that problem, the Cybermotion design uses the common modification of an ex-centered steering axis. Ex-centered steering moves the wheel in an arc around the vertical axis instead of rotating directly underneath it.

Table 1: A Comparison of Omniwheel Technologies

	ASW	UW(Navy)	OW
Technology	long established	25 years old	New
Number of wheels	min 2 & casters, 3 or 4 preferred	min 3, 4 preferred	3 or 4
Number of actuators	2 per wheel	1 per wheel	1 per wheel
Rolling Surfaces	smooth	6 contact changes per turn overlap detrimental	2 contact changes per turn overlap allowed
Change between rotational and translational	stop required	instantaneous	instantaneous
Wheel control	velocity & steering constrained	interwheel velocity constrained for 4 wheels	no constraint
Platform controls	interwheel velocity & steering coordination needed	interwheel velocity coordination needed	simple

Source: Briefing Slides, NGMH ATD CDR, ORNL, January 17-18, 1995.

As an alternative to ex-centered steering, Ferenc Weiczer invented the Maxwheel.[140] The Maxwheel shown in Figure 8 is a conical wheel specifically designed to replace conventional wheels in centered steered ASW applications. A configuration with two independently driven Maxwheels at opposite corners and two idle castors has been proposed for a platform capable of moving 1.6 metric tons. The main advantage of this design is the wheel's ability to change direction of rolling without scrubbing. The main limitation is the higher rolling friction when compared to conventional wheels and the inability to provide simultaneous translation and rotation. The proposed heavy pallet mover is best suited for applications that demand frequent change of direction without change of orientation, i.e. square corners.

The Universal Wheel (UW) concept is one method to overcome the ASW friction

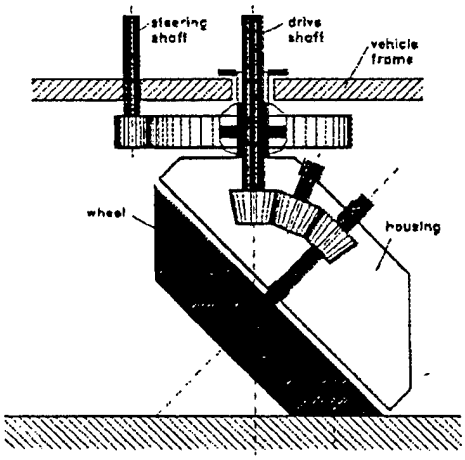

Source: Weiczer, Ferenc. Applying a New Wheel to Steering and Locomotion of Mobile Robots. Internal Report, Chalmers University of Technology, Gothenburg Sweden, 1993

Figure 8: MaxWheel Design

and inter-wheel coordination problems. As shown in Figure 9, the basic UW assembly is a large wheel with many small rollers mounted around the rim.[141] The driveshaft propels the large wheel in the normal fashion while the rollers allow simultaneous motion in a direction parallel to the shaft. This combination of constrained and unconstrained motion provides the basis for omnidirectionality.[142] The main limitations of the basic UW design are the large overall size of the wheels necessary to accommodate the rollers, and the discontinuous contact with the ground which produces significant vibration. Numerous attempts to address those disadvantages have been conducted. One of the most recent was sponsored by the US Navy.[143]

The US Navy has developed and extensively evaluated two omnidirectional platforms.[144] Both platforms are powered by batteries and the larger of the pair is capable of carrying a fighter jet engine.[145] The driving mechanism of each wheel is self contained and a simple multiwheel coordination algorithm is all the control required to slave the platform to a cartesian joystick.

The four wheels on each Navy platform incorporate a variation on the basic UW concept which aligns the rollers 45 degrees from the main driving shaft axis. The individual rollers are also lengthened and tapered to reduce, but not eliminate, the ground contact shock. Various forms of roller coverings have been proposed to increase the compliance of the rollers and therefore reduce the contact vibration. However, the fundamental limitation of discontinuous ground contract remains. The impact of those vibrations on an application such as munitions handling is an open research issue.

A recent variation on the UW concept comes from West and Asada at MIT.[146] At first glance, the small scale prototype looks like a normal tracked vehicle. In fact, that is how normal forward and reverse motions are produced. The innovation is sets of rubber balls inside the circular tread loops. The balls, not the tracks, are always in contact with the surface. Each track has an independent motor. The two other motors can produce sideways motion by spinning the balls perpendicular to the tracks. Proper combination of the four independent motor speeds allow omnidirectional movement. The advantage is better traction which allows faster acceleration and higher payload than other designs with same weight. However, the rotational DOF is extremely difficult to control due to the significant sideways slippage that always occurs during turns of tracked vehicles.[147] The

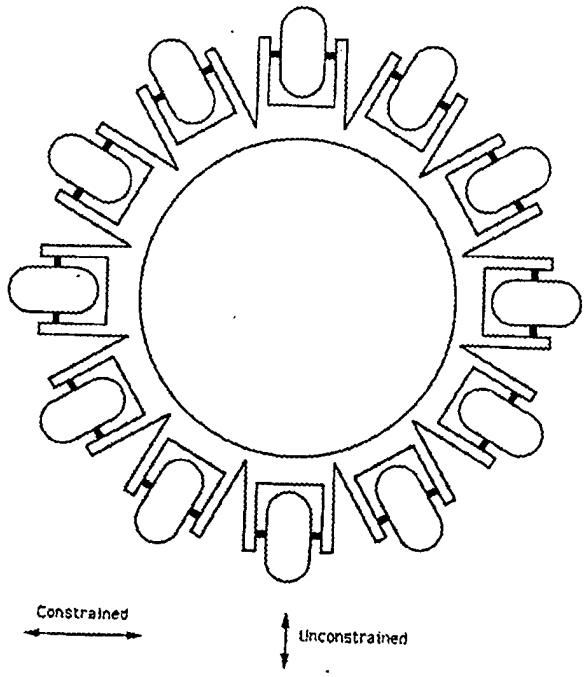

Source: NGMH ATD CDR, Oak Ridge TN, January 16-17, 1995.

Figure 9: Basic Universal Wheel Concept

common ASW problem of significant tire wear and tear, and the disadvantage of a complex locomotion mechanism, are also present.

The Orthogonal Wheels (OW) concept was developed and recently patented by Francois Pin at ORNL.[148] The simplest OW assembly configuration consists of two identical wheels rotating at the same angular velocity, each with 90 degree rolling surfaces and axles offset by 90 degrees. The wheels are two spheres of equal diameter which are sliced to produce wide rounded tires like those frequently seen on all terrain vehicles. The drive axle is normal to the sliced surface and is mounted to allow freewheeling around the axle. This arrangement provides normal traction in one direction while allowing freewheeling in a perpendicular direction. Synchronization of three wheel assemblies

mounted in a triad formation, with each rotation axis separated by 120 degrees, provides omnidirectional motion.

ORNL has produced two variations based on the OW principles.[149] The longitudinal OW assembly is the simplest mechanical design and is ideally suited for applications where a waist provides rotation. While slightly more complex to manufacture, the lateral OW assembly forces both wheels to have an identical velocity and therefore significantly better rotation control. The lateral assembly can produce fully independent translation and rotation, allowing it to spin like a top across a surface. Figure 10 illustrates the lateral OW concept. Extensive experimental evaluation with a small

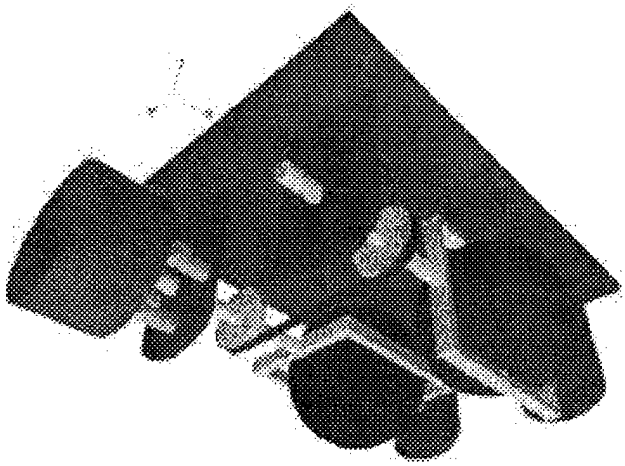

Source: Pin, Francois G, Oak Ridge National Laboratory.

Figure 10: Lateral OW Concept

scale prototype has been completed.[150] Like the Navy prototypes, a simple joystick was used as the operator interface. An OW based platform benefits from fewer moving parts, smaller wheel sizes, and smoother ground contact than the UW approach.

Human Machine Interface (HMI)

The standard industrial robot user interface is via a teach pendant or a computer screen and keyboard. Both FANUC and ABB provide graphical windows-like user interfaces with pull down menus and soft keys.[151] All information is in plain shop floor language, and sophisticated software packages are designed to mask the details of specific tasks such as welding or painting.[152] No industrial robot manufacturer specifically offers a telerobotic interface.

In the laboratory, the most common form of telerobotic interface is some form of joystick. The level of sophistication may vary from simple 3 DOF joysticks, like those used in computer games, to full force reflecting 6 or 7 DOF input devices.[153] A variety of exoskeleton devices are also commercially available.[154] Even before the virtual reality craze, forms of stereo vision and superimposing graphical aids on video images were employed. The critical factor, and the reason this subject is not addressed in more detail, is because all of these devices were designed to control the arm from a distance. The NGMH concept mandates human and machine in the same workspace. Therefore, only the well known lessons learned about force reflection are directly applicable to the NGMH design.[155]

Come-Along Control Mode. The original concept for come along control envisioned a hands-on the weapon control mode (pushing/pulling on the actual munition as the primary source of command input). While at first blush that idea appeared very intuitive, a hands-on the weapon HMI did not stand up to the rigors of a full human factors analysis.[156] The main limitation is that a hands-on control mode makes discrimination between operator and environment inputs impossible. In a hands-on mode the operator

applies inputs at a point in the manipulator kinematic chain that is in front of the force sensor.[157] The force sensor provides the primary input for the gravity balancing, manipulator stability, and force and impact control algorithms. Applying operator input in front of the sensor prevents the system from discriminating between desired inputs and anomalies like munition slipping, wind gusts, or rack contact. Operator and munition safety could not be guaranteed. Active methods for achieving compliance and impact control are not possible. Therefore, all operator inputs must be posterior to the force sensor.

Direct operator munition contact, especially with the missiles, also mandates an end-effector design that ensures fail safe grasping of the weapon. Fail safe grasping means that the munition can not fall out of the gripper regardless of end-effector orientation. That requirement complicates gripper design and reduces reliability. For these and other implementation restrictions, hands-on control was eliminated from further consideration.

The ORNL team proposed their preliminary recommendation for an NGMH HMI at the CDR.[158] The concept uses a near-the-weapon approach which places the primary system operator interface just below the wrist force sensor.[159] This approach retains the critical performance aspects of hands-on control, while negating the drawbacks. The operator still controls the loading process by physically commanding the munition position, but these inputs are now applied through a handle located just a few inches under the weapon cradle. The force sensor now provides the environmental information necessary to enable safety and other advanced control features. HMI panels are located at the front and back of the end-effector.

The proposed HMI input device is a three DOF joystick which maps operator forces into end-effector velocity. A simple toggle switch at the end of the stick selects translation or rotation.[160] The joystick also contains a deadman switch. The design of that switch was a source of concern at the CDR.[161] Consequently, the exact design must be modified. However, the basic principle that the system will not move unless the operator is in control, remains an essential safety feature. A variety of warning lights, pixie displays, and toggle switches permit the user to receive and send other vital system information. The optimum design of the HMI panel is an important applied research issue.

On-line Operator Selectable Degrees of Autonomy. The ability to provide user selectable degrees of autonomy has been extensively demonstrated in the laboratory. Discussion of a representative sample of recent publications serves to define the state-of-the-laboratory. A JPL mock-up of a telerobotic space station inspection robot allows the operator to switch between teleoperation, autonomous and shared control modes.[162] A user has the freedom to select which reference frame: joint, cartesian, or toolpoint to command with the joystick. The shared control mode sums the joystick and computer generated path inputs.

Yokohohji proposed a sequence of mode changes between an operator and telerobotic control system.[163] Under his taxonomy, six operator modes are supported:

- bilateral - teleoperation with force reflection,
- free - operator and remote disconnected, i.e. want to index input device,
- unilateral - teleoperation w/o force reflection,
- autonomy aided bilateral - mixed commands from operator and system,
- autonomous, and
- autonomy aided unilateral.

System stability during the transition period is the classic concern about mode shifting. Yokohohji claimed that the system produced smooth mode changes. Unfortunately, experimental evaluations were only conducted on a single DOF device and are therefore inconclusive.

The UTAP interface specification supports all of Yokohohji's modes.[164] UTAP goes a step further to allow different modes for individual DOF. For instance, one cartesian DOF could be under autonomous control while another translation direction was under a bilateral mode.

Summary

An intelligence preparation of the technology battlefield was conducted. Those results are summarized in the order listed in the tentative list of critical technologies presented at the start of the review.

Telerobotic Architecture. The Unified Telerobotic Architecture Program (UTAP) provides an architecture compatible with emerging standards. Current program plans will lead to a commercial product within five years.

Control Algorithms for Hydraulic Robots. Techniques to mask the weight and inertia of a heavy payload are embedded in commercial control systems for electric drive robots. A single manufacturer of hydraulic robots provides gravity compensation as a standard control system feature. Force control, again on electric drive robots, has been extensively evaluated in the laboratory, and should emerge in commercial products within the next several years. But once again, hydraulic system implementation and evaluation results are scarce. Impact control is an immature technology. Numerous techniques have

been proposed, but experimental evaluations are restricted to simple 2 DOF electromechanical devices. No hydraulic experiments were found. High precision chamferless part mating has not progressed beyond the basic research stage. Researchers are currently working to solve 2 DOF planar assembly problems with simple parts and fixtures.

Motion Planning. Current industrial robot control systems are not designed to support real-time switching of operator and program inputs. However, the UTAP specification supports that capability. No commercial control currently supports redundancy resolution for greater than 7 DOF. Redundancy resolution is a popular research topic, but experimental evaluations for greater than 7 DOF are scarce. Real-time criteria and constraint switching has not been experimentally validated. Using redundancy to enable obstacle avoidance schemes has been demonstrated, and the concept of using redundancy to absorb impact forces was suggested. . Two techniques appear suitable for NGMH application. However, no relative comparison results are in print. Insufficient intelligence information is available to select a single methodology for the NGMH.

Hydraulic Actuation Systems. The requirement for high payload and small size is achievable with COTS equipment. Hydraulic robots with up to a 350 lb. payload capacity have demonstrated human bandwidth at low speed. High precision at low speed remains a significant basic research challenge. Developments in high performance servovalves show great potential and commercial vendors can provide low friction cylinders at moderate cost. However, high payload high precision actuator performance sufficient for missile loading has not been laboratory demonstrated. No new methods for reducing actual joint stiction were found.

Sensors. A commercial vendor can provide a force/torque sensor that meets the NGMH ATD performance specifications. However, that one-off design will push the technology envelope and research on alternative approaches is very limited. A whole arm obstacle avoidance concept is being transferred from the DOE laboratories to a small business. That system will meet the basic NGMH requirements. The basic technologies necessary to sense an obstacle in a CNB environment have been identified by other DOD projects.

Omnidirectional Mobility Platform. Three basic techniques for designing omnidirectional vehicles were discovered. The all steerable wheel concept is commercially available, but lacks the payload capacity and simultaneous rotation and translation ability necessary for the NGMH. Vehicles based on the universal wheel and orthogonal wheel concepts have demonstrate sufficient potential to warrant further investigation. Once again, a comprehensive relative comparison between concepts has not been published. Insufficient intelligence information exists to support advocating selection of a single methodology.

Human-Machine Interface (HMI). The standard industrial operator interface, and a wealth of laboratory telerobotic systems, are all designed to control the manipulator from a distance. Intelligence on HMI for near-the-weapon control is limited to the NGMH PDR and CDR concepts. A pure come-along control mode, where the operator directly moves the munition, is impractical. The proposed near-the-weapon HMI retains the critical performance aspects of hands-on control while negating the drawbacks. Several telerobotics architectures, including UTAP, support an on-line operator selection of autonomy feature.

Conclusion. A comprehensive picture of the industrial and research communities ability to support development of the NGMH prototype was developed through a review of the current commercial state-of-the-art and recent research publications. The intelligence preparation supports the specific target selection and course of action recommendations of the next chapter.

Chapter 3: Technology Targets and Courses of Action

An intelligence preparation of the technology battlefield has provided the information necessary to complete the target selection and Course of Action (COA) development phases in the NGMH prototype acquisition campaign. The COG is the technology development roadmap. The desired effect is transformation of the critical technologies required for development of a robust, fully functional NGMH prototype into commercial off-the-shelf products within a five year window. The objective of this chapter is to define the specific critical technology targets and recommend COAs for attacks that produce the desired effect.

Critical Technology Targets

Analysis of the information gathered from the intelligence preparation of the technology battlefield reveals nine explicit critical technology targets. The specific targets and their crucial performance features are listed below:

1. A UTAP compliant telerobotics control system specification
2. Force sensor with heavy payload and high sensitivity and overload protection
    - Fz=5000 lbs, Fxy=1500 lbs, Txyz=10,000 lbs-in
    - linear force resolution: Fz=5 lb., Fxy=1 lb.
        - moment resolution = 7 lbs-in
        - overload protection, factor of 10 for force and factor of 5 for moment
        - mechanical stop force protection
        - physical dimensions: diameter 8.5 in. with less than 4 in. thickness
3. Hydraulically powered omnidirectional platforms for large payloads
    - 4000 lb. payload capability
    - simultaneous translation and rotation
        - capable of traversing the flightline

4. Whole arm obstacle avoidance system
    - hierarchical sensing network
        - compact modular sensors
    - completely passive, no infra-red or electronic emissions
        - function in a CNB flightline environment
5. Redundant motion planning algorithm for 10 DOF mobile manipulator system
    - full time joint limit avoidance
    - sensor driven simultaneous multiple link obstacle avoidance
        - loop-rate switchable task optimization criteria and constraints
6. Human-machine interface for human augmentation tasks
    - near-the-weapon operator control
    - operator selectable control modes
7. High precision and performance heavy payload hydraulic actuation systems
        - very high motion resolution with a 3000 lb. payload
            - less than 1 mm measured at the NGMH end-effector
            - less than 0.0001 radian measured at the joint
    - end-effector velocity of 1 ft/sec with 3000 lb. payload
    - human-like acceleration at low speeds
8. Active impact control for large payload redundant hydraulic robots
    - compensate for impacts up to the force sensor overload limits
9. Munition installation aids
    - simultaneous insertion of two rectangular pegs into two chamferless rectangular slots
    - realistic peg, slot surfaces, and sensor resolution
        - insertion direction perpendicular to gravity vector
    - less than 3 mm clearance in all dimensions

The capabilities provided by these technologies are the essential features of the NGMH prototype hereafter referred to as the NGMHOne. The NGMHOne is the hypothetical commercial version of the NGMH prototype, the end-state of a successful acquisition campaign.

The astute reader will notice several items on the list in Chapter 2 were removed. Based on the intelligence preparation, the solutions to those requirements were determined to be within the realm of current or near-term commercial technology. The remaining

technologies must be actively targeted during the current ATD project and/or by a dedicated NGMHOne acquisition program.[165]

The list is prioritized based on degree of difficulty. The first item is estimated to require less resources and time to commercialize then the last. The variation in difficulty is not linear. In general, attacks on all nine targets can, and should, be done in parallel. Required levels of interdependence are detailed in the COA section as appropriate. A preliminary version of target list was presented and reviewed at the Advanced Research Project Agency (ARPA) Rapidly Deployable Taskable Machines Workshop in February 1995.[166] The list was the subject of a two hour panel discussion. The attending panel of robotic experts confirmed our assessment that all the targets were valid critical technologies.[167] Given a set of valid targets, creating COAs for those targets is the next step in the campaign planning.

Courses of Action

COA analysis is presented for each critical technology target. Actions are categorized as basic or applied research. Realistic experimental evaluation is an overriding theme. Opportunities to achieve desired effects by leveraging existing programs are exposed. Potential laboratory and technology transfer coalition partners are identified. Parallel attacks will reduce costs and produce synergistic effects.

Although the COAs are intended as planning tools, and could change due to operational and contextual elements, they are presented in a strong directive style. The COAs provide the broad planning guidance necessary to develop a program milestone

chart and complete the specific statements of work (acquisition campaign equivalents of master attack plans and air tasking orders) necessary to execute the campaign.

A UTAP Compliant Telerobotics Control System Specification. This is a pure leverage opportunity. All the major bugs in the interface specification should be discovered during the current phase two activity. The NGMH ATD and UTAP government laboratory principals are already crossfeeding information and requirements. The RACE is managing both programs, and has added the NGMHOne to the list of phase three UTAP prototype developments.[168] Implementing the UTAP specification during the ATD development should answer any NGMH unanticipated requirements prior to prototype development. The only action required is continued political support and collaboration.

Force Sensors. The roadmap for force/torque sensor systems focuses on applied research. ATI will provide a system for the NGMH ATD within 18 months.[169] A force/torque sensor based on the latest design from ATI satisfies the NGMHOne performance specifications. The main reason for selecting ATI over JR3 is the mechanical overload protection inherent in their design.

The sensitivity and range requirements are pushing the envelope on the ATI design methodology. If ATD evaluations reveal that a sensitivity of less than 1 lb. in the off axes directions is required, then alternative design techniques must be employed. To hedge against that risk, several small basic research grants shall be awarded to university teams to investigate force/torque transducers that do not rely on strain gauge technology. The basic research aspect of this area makes ARPA a potential source of funding. The Small Business Innovative Research (SBIR) program shall also be utilized.[170]

Omnidirectional Mobility Platform. The roadmap for platform mobility systems focuses on applied research and experimental evaluation of two omnidirectional locomotion methods. While the intelligence preparation identified three fundamental approaches, the all-steerable wheel (ASW) method is not suitable for further evaluation. The NGMHOne demands a platform that follows any commanded motion from the operator. An ASW design does not produce the necessary simultaneous rotation and translation. The large payload requirements and rough surfaces, especially on the deck of an aircraft carrier, make tire wear a major limitation. Those two deficiencies are overcome with either universal wheel (UW) or orthogonal wheel (OW) technologies.

The Navy UW platform is ready to transition to a commercial product. No additional basic research is required. The prototype has demonstrated the ability to provide simultaneous rotation and translation and carry the required payload. Naval engineers maintain that the wheel size can be scaled to meet the 14 inch wheel requirement of the NGMH ATD.[171] However, there are two open issues relating to drive system and vibration that shall be attacked.

The prototype UW drive system was powered by batteries. Given the NGMHOne size constraints, and hydraulic power system requirements, there is insufficient space or weight for large batteries. Can the drive system be modified to be powered by hydraulics or the diesel generator directly? Application research is necessary to answer that question. However, before money is expended on that effort the vibration issue must be addressed.

UW assemblies are a known source of vibration. Are the vibrations filtered out by the robot arm's inherent compliance, or will the operator feel them when controlling the platform through the end-effector interface? What impact, if any, will the vibrations

produced by the discontinuous roller contacts have on sensor performance and overall system reliability and maintainability? The answers lie in some additional field testing with the large Navy prototype. A proper testbed consists of a platform payload of 2500 lbs along with a simple mechanical structure that simulates the length and reach of the NGMHOne arm. Attach a prototype human-machine interface to the end of the structure and evaluate the performance for a realistic facsimile of loading tasks. If the UW system passes, then proceed with the drive system applied research.

The OW approach has the potential to eliminate the vibration problem, but possesses its own set of questions. Will the wheel assemblies scale up to the size and payload capacity required for the NGMHOne? Is hydraulic power feasible? The answers lie in additional development and field testing. The NGMH ATD provides the perfect opportunity to obtain those answers.

The ORNL recommendation to conduct a comparative experimental evaluation of OW and UW platform designs during the ATD phase shall be incorporated into the overall acquisition campaign.[172] The ATD platform wheel cavity shall be sized to accept either design. ORNL shall design, manufacture, and install hydraulically actuated OW assembles on the ATD. ORNL shall also perform the previously mentioned UW vibration tests. If the tests are successful, then development of a hydraulic UW system shall be conducted in parallel with the OW effort. The Navy shall lead and manage that project in collaboration with ORNL. Finally, field level testing of both locomotion systems shall be written into the overall ATD test plan.[173] The "winning" technology shall be identified within three years and transferred to the civilian sector as part of the prototype development.

Whole Arm Obstacle Avoidance. The whole arm obstacle avoidance system development shall be heavily leveraged against the existing Department of Energy (DOE) technology transfer activity. DOE has to develop an obstacle avoidance system within the next five years to meet their hazardous waste remediation project goals.[174] The architecture they are currently helping to commercialize through Merrit Technologies is sufficient for the NGMHOne. The Air Force shall contribute a small level of funding to that commercialization effort to ensure that our requirements continue to be met, and foster intergovernmental cooperation. Eventually the manufacturing problem of embedding the sensor nodes in the surface of the main prismatic link must be addressed. One cannot just slap a bracelet around the outer diameter of a sliding link. The more immediate concern is whether the existing proximity sensor nodes function properly in the flightline environment.

In support of the NGMHOne requirements, the NGMH ATD shall be used to evaluate the performance of existing sensor nodes on the flightline. A single bracelet with all available acoustic and capacitive sensors must be purchased. Due to the sensitivity of aircraft targeting and navigation pod optics, infra-red sensors are not appropriate. If the existing sensors are not sufficient then an application research project is required.

Basic sensor development shall not be undertaken by this acquisition campaign. Previous weapons system basic research has uncovered all the sensor physics necessary to meet any robot requirement.[175] Conducting the applied research necessary to package those physics into ASIC nodes compatible with the DOE system is a worst case scenario. The CED is currently under contract to ARPA to develop ASIC sensors for other robot

applications, and is therefore a logical place to perform this research. The distance from applied research to commercialization shall be traveled within three years.

Redundant Motion Planning Algorithm. The COA required to convert this technology into a commercial product calls for a combination of basic and applied research prior to technology transfer. The Full Space Parameterization (FSP) approach developed at Oak Ridge National Laboratory (ORNL) clearly has tremendous potential. Just as clearly, the Configuration Control Approach was successfully applied in a realistic scenario. However, neither approach has been rigorously evaluated for a 10 DOF combined mobility manipulation human augmentation application. The first task is to evaluate the performance of both techniques in a realistic simulation of the munition loading operation. ORNL already has a system capable of being used for that task. The HERMES III mobile robot system is a 7-DOF arm mounted on an omnidirectional platform.[176] While the HERMES III system doesn't exactly replicate the NGMHOne, it allows for a low cost evaluation of the basic redundant motion planning performance requirements. By connecting an interface to the base of the end-effector, an operator shall exercise the HERMES III through the basic motions and constraint sets envisioned for the telerobotic munition loading.[177]

Along with basic motion planning performance, the algorithm comparison tests must specifically measure the computational differences. The relevant question is whether the theoretical FSP computational advantage is significant for the number and type of constraints and optimization criteria imposed by the munitions handling application. The optimum form of evaluation is a collaborative effort by ORNL and Jet Propulsion Laboratory (JPL). JPL codes up their algorithm and observes the experimental

evaluations.[178] The comparison results shall be published at a major robotics conference and/or refereed journal.[179] The evaluations shall be completed while the ATD is being manufactured. If performance is adequate, both algorithms shall be coded and further evaluated on the ATD. A form of redundant motion planning is required for the ATD. Final results shall be demonstrated during the ATD field trials. The logical technology transfer partner is one of the industrial participants in the UTAP.

The basic research portion of this COA focuses on developing the obstacle and impact response features of redundant motion planning. Experimental evaluations of both the configuration control and FSP algorithms, in a realistic multi-obstacle scenario, have not been completed. That basic research gap must be filled and taken a step further to a detailed comparative analysis. Another gap exists in the application of redundancy to impact control. The use of redundancy to negate the effects of impact forces on manipulator performance is intuitive.[180] However, that intuition has never been put to the test. A redundancy based solution to impact force dissipation will have a beneficial effect on a wide range of applications, and shall be included in the NGMHOne basic motion planning research.

Once again, the best COA is a collaborative effort between JPL and ORNL.[181] The previously proposed sequence of experimental evaluation platforms is applicable. The motion planning solution shall be compared to the results from active impact algorithm research. Combinations of motion planning and control algorithms shall also be evaluated and contrasted to individual component performance. ATD evaluation results shall be submitted for publication within three years.

Human Machine Interface (HMI). The COA is again a combination of basic and applied research. Past research provides numerous insights into how to design the driver's station platform interface, but the field of near-the-weapon HMI for human augmentation is wide open. The most critical task is to get real operators involved early and often. In the late 1980's NASA invested over $800M in the Flight Telerobotic Server (FTS) program. According to two of the program managers, one of the major reasons the program failed was the lack of real user (astronaut) participation in the selection of the operator interface.[182] The crucial lesson learned is to get the operators involved early in the design loop and sell them on the advantages of a new and unfamiliar technology.

This technology target is also tightly crosslinked to the Operator Acceptance COG. The ability to design an acceptable HMI is tantamount to the success of the entire acquisition program. The ATD must focus on a thorough evaluation of the operator interface concept presented and critiqued at the CDR.[183] The deadman switch safety issue must be resolved, and the face of the panel streamlined to simplify and/or reduce operator selection of command codes. Due to the critical importance of the HMI, the near-the-weapon concept must be evaluated prior to NGMH ATD manufacture. Waiting until the ATD is fabricated wastes precious time. A decision on the suitability of the currently proposed HMI concept is a key ATD milestone.

ATD fabrication and HMI evaluation shall be conducted in parallel. ORNL shall fabricate the HMI and conduct an extensive series of simulation and experimental trials. As a first level test, the HMI outputs shall be input to an IGRIP simulation of the NGMHOne.[184] Engineers and operators shall utilize this setup to direct the NGMHOne through a realistic loading simulation. After modifications to incorporate lessons learned,

the HMI shall be attached to one of ORNL's existing hydraulic manipulators for further evaluation.[185] HMI experiments shall begin immediately. The MMHE focal point is responsible for providing load crew members with the experience and open minded attitude required for objective evaluation.

The ATD provides a testbed for further HMI research. The DOD shall seize this opportunity by funding several basic research studies in the area of HMI for human augmentation. The knowledge base on this brand of human augmentation is very shallow. The near-the-weapon concept is based on past experiences with more distal types of teleoperation. ATD specific activities will be driven by the twin evils of limited time and money to produce a fieldable solution within two years. There is usually a world of difference between acceptable and optimum. A dedicated research project provides the impetuous to look beyond the short term solution and design an optimum NGMHOne HMI. A basic research program shall be coordinated with the human factors experts in the Armstrong Laboratory and current/envisioned ARPA projects.

High Precision And Performance Heavy Payload Hydraulic Actuation Systems. Proper design of sophisticated telerobotic control systems adheres to the synergistic design philosophy of mechatronics.[186] In common Air Force terms, mechatronics is another form of integrated product teams. The high precision and performance requirements of the NGMHOne can be achieved by advanced hydraulic actuation system designs , use of advanced control software, or some combination of the two[187] Therefore, both alternatives shall be evaluated in a coordinated fashion. Both evaluations involve a degree of basic research.

This COA starts with a comprehensive evaluation of adaptive control of hydraulic manipulators. The initial test case is the lower link low friction cylinder procured for the NGMH ATD. That cylinder represents the current state-of-the-art in fail safe low friction cylinders.[188] The test objective is to determine if advanced control techniques can eliminate, or reduce, the requirement for enhanced mechanical designs.

Several leading adaptive approaches shall be coded and experimentally compared. Only approaches with rigorous stability proofs and a history of experimental evaluation on real world electromechanical systems shall be considered. The Air Force can not afford to have an NGMH become unstable while ferrying 2000 lbs. Achieving the required precision is only part of the solution. Operator and aircraft safety are of primary importance. The initial evaluation shall be completed within a year. If the initial single link tests are successful, then research shall progress to a full sized hydraulic laboratory arm. Once those tests are concluded for light and medium payloads, then the evaluation shall progress to the full ATD. ORNL shall perform this research for obvious reasons.

A solution based on enhanced actuator and servovalve performance and existing control technology has an inherent safety advantage. A high pressure hydraulics research program shall be conducted in parallel with the adaptive control evaluation. That research effort has both an applied and basic component. The Sarcos suspension-type servovalves appears to have significant advantages over conventional spool based designs. However, that level of performance improvement has not been rigorously evaluated for heavy payload applications. The applied research effort is to conduct an engineering tradeoff study with commercially available: linear spool-type servovalves, three stage proportional valves, and single-stage suspension-type valves. Developing a fail safe actuator with

hydrostatic performance at the current cost of low friction piston and rod seals is the basic research challenge. The CED is the logical choice for both research assignments. They have demonstrated world-class expertise in hydraulic system design, and contract vehicles already exist through ARPA. The CED could transition the technology directly to Sarcos or team with a larger industrial partner. Close coordination with ORNL must be maintained. With a concentrated effort, high performance high pressure hydraulic systems shall be commercially available for the prototype in five years.

Active Impact Control for Redundant Heavy Payload Hydraulic Manipulators. Development of this capability requires a COA stretching from basic research through full scale testing. Completion of full scale testing is dependent on the availability of prototypes of the previously discussed high performance high pressure hydraulic systems. A UTAP partner is again the recommended technology transfer agent.

Passive compliance is sufficient to accomplish the operator acceptance objective of the ATD, but is not an acceptable solution for the NGMHOne. The wide range of workpiece (munition) and fixture (launcher and rack) weight and geometry make manufacture of an optimal passive system device impossible. Switching passive devices based upon specific munition type is impractical.[189] An active solution uses the existing force sensor system and doesn't require any additional mechanical hardware, thereby also improving reliability and maintainability.

The path to commercially available impact control functions starts with basic research. Chapter Two identified four potential methods for achieving active impact control: negative proportional gain plus feedforward force, PD with velocity feedback, nonlinear PD, and input preshaping. None of those approaches had progressed past two

link evaluations on simple electrically driven kinematics. The limited evaluations also make relative comparisons between the techniques impossible. The first order of business is to fund a single independent laboratory to extend those algorithms to a full 6 DOF and conduct comparative experiments on a hydraulic arm. The CED, Sandia National Laboratory (SNL), and ORNL have the expertise and existing hydraulic systems to perform the research. AFIT could serve as an additional source of independent verification.[190] Follow on research shall evaluate the two most promising techniques on the ATD manipulator, first in the laboratory, and then in field tests with a full spectrum of munitions. Final evaluations shall be on prototypes of the proposed high payload high precision actuation systems. The algorithms must be coded for UTAP compliance and a technology transition agreement put in place from the onset.

Impact control is a vital component of any assembly process. The potential to extend and/or leverage from the industrial sector, and DOD depot projects, shall not be ignored. Every effort to crossfeed information and conduct collaborative research must be explored. Along with the DOE laboratories, the National Center for Manufacturing Science (NCMS) offers the most potential. NCMS funding is routed through the USAF Mantech program and they have expressed an interest in sponsoring joint projects.[191]

Munition Installation Aids. The path to providing the NGMHOne operator with installation aids is again dominated by basic level research. This target is the toughest to attack due to the immaturity of the field. Installing a missile on a launcher is a long difficult journey from planar assembly with simple friction. Simulations don't even exist for the simultaneous chamferless insertion of two rectangular pegs problem that represents

the initial installation phase of missile loading. Given the current state-of-the-art, a commercial solution is not viable within the next five years.

This is an ideal opportunity for ARPA funded research. ARPA is tasked to fund basic research that has a definite military application. Munition installation aids clearly fits those constraints. The problem is clearly basic research, and just as clearly tied to real problems in both the DOD and manufacturing sector. The field is also wide open. Approaches other then admittance control, such as fuzzy logic and neural networks must be explored. Redesign of the current missile launcher attachment system shall also be investigated. Thinking outside the lines shall be encouraged. Graduate university laboratories are the proper place to accomplish this task. Attendees at the recent ARPA workshop on Taskable Machines felt the basic research portion of this problem could be solved within five years if the proper recourse were made available.[192]

The RACE shall actively promote the missile insertion requirements to the DOD basic research community. NCMS is again the logical place for information sharing and collaboration with the manufacturing sector. The NGMH munitions installation problem is easily phrased in more classical automated assembly terms. Missile installation involves assembling a large part (munition) into a specialized fixture (rack/launcher). Existing NCMS projects in light assembly, could provide insights into the larger scale problem. The RACE shall attend NCMS flexible assembly meetings and actively participate in any large assembly working groups. A leading RACE role also fosters crossfeed between flightline and depot backshop assembly projects.

Summary

The next two phases in NGMH acquisition campaign planning are now complete. Nine explicit critical technology targets were identified. COAs for producing the desired effects were developed for each target. Those COAs separated the required actions into technology transfer and applied and basic research categories. Coalitions of laboratories and companies best suited to accomplish the mission were suggested. An implementation plan for attacking the critical technology roadmap COG can now be created. The campaign planning focus moves to the business plan COG.

Chapter 4: Dual Use Business Case Analysis

Dual use applicability is an essential component of any new system prototype acquisition campaign. Projects without joint service supported requirements and dual use potential have little promise for success. Both industry and the government recognize the movement toward the maximization of research and development efforts. Mark Mikula, an engineer working for the Army's Tank and Automotive Command, sums it up when he stated that, "By pursuing these technologies (dual), the obvious gains are to avoid duplication of efforts, access to a larger database of ideas, and reduction of research and development costs."[193] The current CEO of Martin Marietta Corporation, Mr. Norman Augustine, basically mimics Mr. Mikula's thoughts on the importance of the exchange of dual use technologies.[194]

In today's environment of drastically cut defense budgets the move toward technologies that assist both industry and the defense establishment is no longer just a trend, it is a fact. In the past, one looked to strictly USAF sponsored research and development agencies like Mantech or Reptech to fund an NGMH prototype effort. But the budgets of those agencies have been slashed to support dual use efforts like the Technology Reinvestment Program (TRP) and Advanced Technology Program (ATD) administered by the Advanced Research Projects Agency (ARPA) and the National Institute of Standards and Technology (NIST) respectively. Both the TRP and ATD individually had budgets of over $250M in FY94, and the ATD is projected to ramp up to $750M in two years.[195] In order to compete for those dollars, one must establish the joint

and dual use credentials of their proposed project. Therefore, a dual use business case analysis is a COG of any government acquisition campaign.

The objective of this chapter is to begin the development of a dual use business case analysis for the NGMH prototype. First, the economic justification for the munitions handling applications are presented. The search then moves to other military applications with high potential for excellent return on investment. With the military credentials established, attention turns to a high level analysis of the civilian sector. Detailed economic analysis for specific industrial usage was beyond the scope of this research project. The intent was to identify civilian sectors that demonstrate high potential for manpower savings from employment of systems based on the NGMH critical technology targets.

Munitions Handling

While dual use is essential, it is irrelevant unless the military benefits are significant. Therefore, the first step is to certify the process improvement and economic advantages from fielding an NGMH system. A necessary next step is to identify the potential for sister service applications. For munitions handling, those are both easy tasks.

The armed services could utilize the system on both carrier and land-based munitions loading onto aircraft. The benefits include increased turn around time of sorties, reduced size of crew loading munitions, and decreased heavy lift workload of the loading crew. The heavy lift workload improvement is especially pertinent to carrier operations which currently are not supported by an mechanized munitions handling equipment. An USAF load crew is comprised of three airmen. The NGMH is projected

to achieve process improvements that support reduction of the crew size to two individuals. Air Combat Command (ACC) estimates that manpower reduction will result in a yearly savings of over $46M.[196] That estimate is based on the full cost of a load crew member, i.e. training costs, medical costs, and other human support costs, in additional to salary. Assuming that the Navy could also reduce load crew size by a single seaman, and has half the loading personnel of ACC, adds another $23M to the yearly DOD savings. Using the NGMH to load heavy munitions on the Army attack helicopter fleet could bring the total yearly savings to over $75M. And while these numbers are certainly not precise, they definitely justify continued DOD research and development investment in NGMH technologies.. There is another advantage of the system that is not directly cost related. The system would "lessen their (personnel) exposure in a hazardous environment".[197] Load crew quality of life would significantly improve.

Application of telerobotic technologies to munitions handling has clear joint application and economic justification. The first test in business case development is successfully passed. Attention now turns to other military applications.

Military Applications

A high level investigation of potential military applications of NGMH technologies was conducted. The investigation focused more on the capabilities those technologies provide, rather than the technologies themselves. The key NGMH capabilities that helped focus the search were::

1. omnidirectional transport of heavy payloads,
2. heavy lift capability with minimal operator exertion,
3. high fidelity manipulation,
4. operator rides on the platform,

5. totally self contained portable heavy lift manipulator.system.

Based on those capabilities, three generic employment configuration were postulated. Configuration variations centered on replacing the munitions end-effector with: a general purpose gripping device or a tooling device, forklift tines, and/or an operator work platform. Employing those key capabilities and possible reconfigurations as a search space filter, resulted in identification of two additional military applications. A brief description of the each application and possible NGMH usage scenario are discussed, and a rough cost analysis produced.

Lifting of Heavy Objects. The military environment has numerous applications for a mobile self-contained heavy lift manipulator. One classic example for the Air Force and Navy is aircraft jet engine replacement operations. "The Air Force owns and uses about 50,000 turbine engines that are subjected to wear and breakdown during their operational use."[198] These engines require maintenance and are sent to depots for rebuild several times during the engine's lifespan. Therefore, engines need to be extracted and replaced from airplanes on a regular basis. The NGMH technology could be easily adapted in order to reduce the number of maintenance personnel needed to accomplish this task and also facilitate a faster extraction and replacement operation. In fact, as mentioned in Chapter Two, the Navy has already demonstrated the potential of omnidirectional equipment in fighter aircraft jet engine replacement. Engine removal and transportation is just one example.

There are several other potential applications that fit the heavy lifting scenario. A system based on NGMH technologies could augment the human teams that are currently responsible for loading Hawk or Patriot missile batteries for Army units.[199] The Navy is

also interested in improving the process by which standard air defense missiles are loaded into shipboard canisters.[200] Other possible applications include air cargo terminal pallet movement or assisting the Air Force's prime beef teams performing material handling as they enter a new area of operations. An NGMH type forklift system represents a serious improvement over conventional 463L material handling equipment. Utilizing common equipment for cargo and munition handling enhances the flexibility of deployed forces and reduces the repair and maintenance pipelines. These few examples highlight many of the possibilities the NGMH system create in heavy lift tasks.

The cost analysis for this scenario is similar to the one conducted utilizing the system for munitions loading. However, estimates from a higher headquarters were not available. Therefore, as a rough order of magnitude, assume that the NGMH type system could replace one solider from each team conducting a heavy lift task. In addition, assume that the individual is an E-4, making a salary of $19713.60 annually. A good rule of thumb is that training and other support costs are at least equal to the base salary, resulting in a yearly savings of approximately $40K per airman. A conventional heavy duty industrial robot costs between $80-$120K to install and can last for ten years. If the NGMH is manufactured to the same quality standards and production costs, each single application pays for itself in 2-3 years. The market is there if the price is competitive.

Hazardous Tasks. The final military application considered in this review was hazardous material and explosive ordnance disposal (EOD). These two applications are already being explored by several government agencies. According to the Unmanned Ground Vehicle/Systems Joint Project Office's Unmanned Ground Vehicle Master Plan, the Robotic Excavation Vehicle (REV) program has the purpose of "providing the

mechanism for users to acquire an area clearing capability that reduces cost and personnel risk."[201] Actually this system initiated as the Air Force's Rapid Runway Repair (RRR) system back in 1990. REV's primary mission is to " demonstrate its robotic/autonomous vehicle capability for area clearing as a primary part of the system designed for removal/disposal of unexploded ordnance."[202] Another DOD agency working on EOD robotics technologies is the Directorate of Combat Developments of the Army's Ordnance school. The school is currently developing two different robotic systems in order to "assist in solving some of the most critical tasks facing EOD, such as unexploded ordnance, improvised explosive devices, improvised nuclear devices and special improvised explosive devices."[203] The two devices are called the Remote Control Reconnaissance Monitor (RECORM) and the Remote Ordnance Neutralization System (RONS). Both systems utilize sensors and allow the operator to control the systems from a safe distance away from possible danger. The systems utilize radio or fiberoptic technologies in order to pass real time video to the operator. Several NGMH critical technologies could enhance the abilities of the RONS and RECORM. Specific technologies include: high precision and performance hydraulic systems and active impact control enable high fidelity of manipulation which is a key technology in the realm of handling unexploded or hazardous materials. An omnidirectional platform with simultaneous rotation and translation enhances mobility providing easier site access. Highly redundant manipulators also improve the site access and ability to operate around obstacles. The cost savings for these applications are measured not in payroll, but in lives saved.

Civilian Extensions. Thus far we have evaluated the possible military applications of the NGMH system or critical technologies. In most cases, there is a direct commercial applications as well. Specifically, the civilian sector could also utilize a telerobotic system to assist in jet engine replacement. Material handling applications also readily extend to the civilian sector in a global marketplace. By the end of the decade the expected European market value for material handling equipment is estimated at more than $2.5B with the automotive market accounting for 25%.[204] Police forces and federal enforcement agencies could utilize the enhanced EOD systems to improve the quality of hazardous material and unexploded ordnance processes and reduce lose of life.

The US hosted over 8000 bombings during the 1990-1992 time period.[205] Because of this threat several police departments have purchased robots for the purpose of bomb disposal and hostage negotiations. One of the first systems developed and used by operators is the Remotec's Andros robot. This robot provides the operator a safe environment in which to defuse or move unexploded ordnance. The system is currently utilized by at least eleven local, state, and federal police customers. Remotec also supplies robotic hardware for the following purposes: for audio and visual surveillance in nuclear plants, remote explosive handling, and waste disposal in hazardous environments. The technology for this application is feasible and is being fielded to customers now. What the NGMH brings to the table is possible improvements to existing systems and reduced development costs.

Those direct transfers of technology are certainly valid dual use objectives, but they do not go far enough. The real key is to find commercial applications, which on their own merits, justify the research and development costs of attacking the critical technology

targets. The next step is to search for those high potential commercial applications of NGMH critical technology.

Commercial Applications

A search for indirect commercial applications of NGMH systems and critical technologies was conducted. The NGMH capabilities and end-effector configuration filters were again applied to narrow the search space. Emphasis was on identifying industrial sectors, not individual applications. The objective was to locate industries with a high potential payoff from augmenting their existing human workforce with NGMH type systems. The construction, manufacturing, security, and commercial cleaning industries emerged at the top of that list. A quick overview of each industry, sample employment scenario, and top level cost analysis is presented. For consistency, all the manpower and wage statistics come from same US Department of Labor survey.[206] The four areas are examined in turn.

Construction. For the past two decades the construction business has displayed a keen interest in robotics application in order to automate the industry. One of the leaders in this examination of robotics utilization is an Israeli engineer named Abraham Warszawski. Mr. Warszawski states that almost all construction activities can be accomplished by the following four generic types of robots: assembling, the interior general, the floor finishing, and the exterior wall finishing.[207] Floor finishing robots are in wide commercial use in Japan[208], but the other three types are still not mass produced. The NGMH critical technologies list has key components necessary for turning those three

other construction robot classes into COTS systems. To illustrate that point, the tasks performed by the assembling robot are examined in greater detail.

According to Warszawski, the assembling robot can be utilized for hauling and positioning large building components, for example, steel beams, pre-cast concrete members, or semi-finished dry wall.[209] Assembling robots manipulate the article with their robotic arms and can be teleoperated or preprogrammed and monitored by an operator through sensors. The system is best utilized under harsh or hazardous conditions. The design of the system needs to allow for permanent or temporary connecting of the positioned article to the existing structure. A specific assembling operation is wall building. An NGMH system would greatly improve the productivity of workers tasked with attaching large heavy sheet products to a structure. Hanging ceilings is another obvious potential application. In fact, Waszawski suggests that his four generic robots could perform ten basic activities: positioning, connecting, attaching, finishing, coating, concreting, building, inlaying, covering, and jointing.[210] That list covers most of the major labor intensive tasks and suggests a huge potential market for human augmentation systems.

The next step is to conduct a cost analysis of telerobots in the construction business. In 1990, there were 640,000 construction companies in the United States employing over 5 million personnel for construction purposes.[211] The average salary of one of these workers was $26,156.[212] If the construction industry could reduce the work force by a mere 5 percent by augmenting robotics into their operation, they could save along the lines of $6.6 trillion annually in salary alone. Although the acquisition of robotics technology is not possible for every construction firm in the US, as an industry,

this figure is amazing. Without a doubt, these cost savings figures are large enough to justify approaching the large construction companies as potential partners for dual use research and development activities.

Manufacturing. The manufacturing industry has a long history of utilizing industrial robots. In fact, according to Joe Engelberger, "the industrial robot segment of manufacturing automation was, in 1992, a six billion dollar industry".[213] Today industrial robots perform such tasks as welding, finishing, assembly, and machining applications.[214] Additionally, certain factory material handling operations have been improved and parts inspections has been introduced. The classic example of industrial robotic employment is the automobile production industry. All new car assembly plants utilize robots for welding and to apply paint and sealants. Industrial engineers are constantly search for systems that allow increased utilization of automated and robotic systems. Major hurdles remain in automotive trim and final assembly.[215] Final assembly of large body panels would be feasible once the NGMH critical technologies are developed. Specific dual use requirements for that area are the high precision heavy payload capability, force sensors, active impact control, and software developed for munition insertion aids.

Final assembly is not the only NGMH system application. Automotive assembly involves numerous movement of heavy assemblies between workstations. A single NGMH material handling system incorporates lifting of heavy objects and movement of parts, finished products, and assemblies to other portions of the assembly line in a single flexible system. That flexibility is a key factor. The industry is working hard to reduce their reliance on hard automation and to reduce the corresponding tooling costs so that smaller niche productions runs are profitable. The overlap between military and

automotive industry telerobotics requirements, once again justifies an effort to cultivate technology development partners from the Big Three automakers. Strengthening the existing interaction with NCMS is the logical place to start courting automotive industry support. The economics support that effort.

The following discussion is a quick look at possible labor cost savings for the automotive manufacturing industry if NGMH systems were utilized. Once again it is difficult to estimate the exact reduction of the number of personnel because of the insertion of telerobotics technologies into the manufacturing process. But a quick and dirty calculation demonstrates the potential savings.

As of 1990, there were 5381 companies involved in the motor vehicle and equipment manufacturing industry and they employed 823,455 personnel[216]. Their average annual salary was $37,440.[217] If introduction of telerobotic technology was able to reduce the workforce by one percent, the industry could save $1.09 million dollars a year in direct labor costs alone. Total manpower savings would be at least double that figure.

Security This industrial sector is part of the $2 billion US market for industrial, commercial, and institutional security system industry.[218] There have been several recent instances of robots providing augmentation to security missions. A few examples are summarized from an article in Industrial Robot.[219] In 1990 the Andros Mark VI robot was used to augment security for the Goodwill Games in Seattle, Washington. The $80,000 system had video cameras, a water cannon, a shot gun, and an x-ray camera to detect bombs. It also had a manipulator arm to turn doorknobs, pick up and move injured people, and to carry objects. Robot Research, a developing company, provides automated

video systems that are utilized at the Three Mile Island nuclear plant and on the Space Shuttle. These are a few examples of the growth and use of existing technologies to augment security operations. Obviously, these systems need to have a few more capabilities than what is used for in normal manufacturing automation robots. Some of these capabilities include sensor capability, communication equipment (radios, and fiberoptic or radio frequency devices), some type of guidance capability (autonomous or preplanned routes), and the hardware and software to integrate the total package.

The biggest challenge in security system development is systems integration. How to put all the required manipulation, mobility, and sensor systems cost effectively into a single package. The well known advantages of standardization provided by a COTS version of the UTAP architecture standard would significantly reduce the cost and time associated with system integration tasks. Since security robots do not generally require heavy payload or high fidelity manipulation, direct application of other NGMH based technologies is limited to the omnidirectional platform. As identified in Chapter Two, most commercial systems use ex-centered steering and provide simultaneous rotation and translation by use of an additional waist axes. If manufacturing costs were equivalent, the proposed NGMH mobility platform provides improved performance and reduced maintenance cost.

The higher performance and lower cost made possible by the NGMH mobility platform and UTAP will enable increased market penetration. Utilization of robotic security systems has a significant cost savings potential. The security systems services industry was comprised of 2,208 firms in 1990, employing in excess of 41,000

personnel.[220] If the robotic systems replaced only five percent of the workforce, then the industry would save in excess of $43 million annually.

The security sector primarily represents a technology exploitation opportunity. Creation of NGMH COTS systems will not fundamentally, by themselves, change the security sector marketplace. Since, commercial technology already exists, the industry has little incentive, and lacks the engineering staff infrastructure, to directly participate in research and development activities. However, the potential for greater market penetration should be highlighted in presentations to dual use funding agencies. Think of technology exploitation examples as a force multiplier when targeting dual use funding agencies.

Commercial Cleaning. The commercial cleaning industry is predicted to become of the three fastest growing industries in the upcoming decade.[221] The industry dusts, vacuums, buffs floors, and cleans bathrooms for hotels, office buildings, hospitals, plants, airports, stores and schools. Every day 30 million commercial and industrial toilets must be cleaned. That translates into $2B a year to do job nobody wants to do. Wages, salaries, taxes and insurance are almost 90% of a company's costs.[222] Productivity, morale and self-esteem are low. There is no career path and turnover exceeds 400%.[223] Office buildings are easy to clean but have high turnover and absenteeism, making robot insertion costs easier to justify than industrial applications. The human workforce is quickly becoming augmented by robotic cleaning systems. In many cases robots are bought not to replace people, but to increase the self-esteem, self worth and morale of the staff.

Specific examples include, Singapore International Airlines using robots to clean it's planes. The robot has a brush arm powered by a diesel engine. Trained operators manipulate the arm with joysticks. Windsor Industries of England has developed Roboscrub, a self-propelled floor scrubbing robot that uses a laser beam tracking navigation system. The system even avoids obstacles. NASA and the United Parcel Service are among the robots users. The US Post Office is funding a project to develop a robotic assistant to help with cleaning all those toilets.[224] These examples are just the tip of the iceberg in potential telerobotic cleaning opportunities.

The potential benefits from incorporation of NGMH critical technologies into commercial cleaning systems are identical to those identified for the security industry: higher performance and lower development costs. The building maintenance service industry was composed of over 43,000 firms employing over 747,000 employees in 1990.[225] Assuming those firms could reduce their human workforce by only 5% through telerobotic augmentation systems, an annual labor cost savings of approximately $374 million could be realized. As was the case for the security sector, commercial cleaning is primarily a technology exploitation opportunity.

Summary

A dual use business case analysis is an essential part of the NGMH prototype acquisition program. The first step in developing that case was to certify the economic justification for the military application. Fielding the NGMH will allow all three services to reduce each load crew by one individual. The resulting manpower savings could amount to over $75M per year. That promising military cost saving potential could be

enhanced by applying the NGMH system and critical technology set to heavy lifting and hazardous duty human augmentation tasks. Solutions to those applications directly extend to the civilian sector.

A search for indirect commercial applications of NGMH systems and critical technologies was also conducted. Emphasis was on identifying industrial sectors, not individual applications. A quick overview of four industries, sample employment scenario, and top level cost analysis was presented The security and commercial cleaning industries could exploit the improved performance and lower cost systems enabled by NGMH critical technologies to increased market penetration The construction and manufacturing sectors demonstrated a high potential payoff from augmenting their existing workforces with telerobotic systems. Those industries should be approached as partners for dual use research and development activities. A solid foundation for the continued development of a dual use business case analysis for the NGMH prototype is now in place.

The telerobotics generation is upon us. The cold war is transforming into an economic war. The proper amount of research and development dollars must be applied to this growing science in order to remain competitive in today's global economy. What is evident after this analysis is that many of the military applications have commercial applications and vice versa. It is both industry's and the Department of Defense's responsibility to sponsor this development. Dual use of technology is one way to reduce the cost for both parties and enhance our military and economic competitiveness.

Chapter 5: Conclusions and Future Directions

The Air Force will improve the quality of the aircraft munitions loading process by fielding a new generation of munition handling equipment that incorporates emerging telerobotics technology. The objective of this research was to create the critical technology development roadmap and business case analysis necessary to support an acquisition campaign whose end-state is a next generation munitions handler based on commercial-off-the-shelf telerobotic components. The principles of air campaign planning provided a framework for planning that acquisition campaign. A critical technology roadmap and dual use business case analysis were treated as two system essential COGs. The problem was to identify the specific target subsets of those COGs and to recommend courses of action (COAs) that would produce the effects necessary to support the objective. The solution is summarized below.

Summary of Results

While the idea of applying robotic technology to munitions loading is not new, serious study did not begin until 1994. A coalition of operators and technologists found a champion willing to fund an exploratory study, and then a comprehensive conceptual design, for what came to be called the Next Generation Munitions Handler (NGMH) Advanced Technology Demonstrator (ATD) project. The first part of this report documents the sequence of events that lead to the creation of the NGMH ATD project.

The background section contains a thorough review of the munitions loading process with an eye toward the salient features that directly impact application of

telerobotics methodologies. Based on the level of problem understanding achieved by the design team by the ATD preliminary design review, a tentative list of technologies critical to the successful implementation of the NGMH concept was developed. That list serves as the focal point for an intelligence preparation of the battlefield operation.

An intelligence preparation of the technology battlefield was accomplished. The objective was to gain the detailed knowledge necessary to identify specific targets for the critical technology roadmap COG. A critical technology target was defined as a set of capabilities that directly support a specific system performance requirement, and are not commercially available. To accomplish our objective a comprehensive picture of the industrial and research communities' ability to support development of the NGMH prototype was gained through a review of both commercial state-of-the-art product specifications and recent research publications. That examination focused on the performance requirements in the tentative technologies list and was subdivided into five major technology areas: control systems, hydraulic actuation systems, sensors, omnidirectional mobility platforms, and human-machine interfaces. The information gathered was presented both in comprehensive detail for the robotics engineer and summarized for the less experienced. Analysis of that information refined the original critical technology list into the nine critical technology targets shown below.

1. A UTAP compliant telerobotics control system specification
2. Force sensor with heavy payload and high sensitivity and overload protection
    - Fz=5000 lbs, Fxy=1500 lbs, Txyz=10,000 lbs-in
    - linear force resolution: Fz=5 lb., Fxy=1 lb.
        - moment resolution = 7 lbs-in
        - overload protection, factor of 10 for force and factor of 5 for moment
        - mechanical stop force protection
        - physical dimensions: diameter 8.5 in. with less than 4 in. thickness
3. Hydraulically powered omnidirectional platforms for large payloads

- 4000 lb. payload capability
- simultaneous translation and rotation
  - capable of traversing the flightline

4. Whole arm obstacle avoidance system
   - hierarchical sensing network
     - compact modular sensors
   - completely passive, no infra-red or electronic emissions
     - function in a CNB flightline environment
5. Redundant motion planning algorithm for 10 DOF mobile manipulator system
   - full time joint limit avoidance
   - sensor driven simultaneous multiple link obstacle avoidance
     - loop-rate switchable task optimization criteria and constraints
6. Human-machine interface for human augmentation tasks
   - near-the-weapon operator control
   - operator selectable control modes
7. High precision and performance heavy payload hydraulic actuation systems
     - very high motion resolution with a 3000 lb. payload
       - less than 1 mm measured at the NGMH end-effector
       - less than 0.0001 radian measured at the joint
   - end-effector velocity of 1 ft/sec with 3000 lb. payload
   - human-like acceleration at low speeds
8. Active impact control for large payload redundant hydraulic robots
   - compensate for impacts up to the force sensor overload limits
9. Munition installation aids
   - simultaneous insertion of two rectangular pegs into two chamferless rectangular slots
   - realistic peg, slot surfaces, and sensor resolution
     - insertion direction perpendicular to gravity vector
   - less than 3 mm clearance in all dimensions

The capabilities provided by these technologies are the essential features of the NGMH prototype and mandate a dedicated research program as a key component of the acquisition campaign.

The next step was to create innovative Courses of Action (COAs) to attack those targets. A successful attack shall produce the desired effect of converting the essential telerobotics methodologies into commercial-of-the-shelf (COTS) technologies. COAs capable of producing the desired effects were developed for each target. Those COAs

separated the necessary actions into technology transfer and applied and basic research categories. Coalitions of laboratories and companies best suited to accomplish the mission were suggested. The tactical level planning that results in the equivalent of a master attack plan and air tasking order (milestone planning and statement of work) can now be accomplished. The campaign planning focus moved to the business plan COG.

Business plan development started with a verification of the munitions handling economics. Estimates showed that improving the quality of the munitions handling process has a DOD wide manpower reduction potential of over $75M per year. Those findings certify the purely military justification for an NGMH critical technologies research and development program. But, a strictly military benefit is insufficient to justify development of a new piece of support equipment. Dual use applications must also be identified.

Scenarios for technology application in a range of alternative military and commercial applications lay the groundwork for development of a dual use business case Development of the NGMH critical technology suite would reduce manpower requirements in civilian and military heavy lifting and hazardous tasks. NGMH systems would have a payback period of 2-3 years for each individual removed from those dual-use non-munitions applications.

Potential construction industry manpower cost savings, from utilization of NGMH based human augmentation systems, are in the trillions of dollars per year. The manufacturing sector, especially automotive, will also significantly reduce manpower costs and enhance product quality by incorporation of telerobotic systems. Therefore, the

construction and manufacturing sectors should be approached as partners for dual use research and development activities

Security system, and commercial cleaning applications could exploit the improved performance and lower cost systems enabled by NGMH critical technologies to increased market penetration and thereby reduce manpower costs by tens of millions per year. Since, commercial technology already exists, those industries have little incentive, and lack the engineering staff infrastructure, to directly participate in research and development activities. However, the potential for greater market penetration is a research and development benefit force multiplier that should be highlighted in presentations to dual use funding agencies.

The foundation for creating a comprehensive dual use business case is in place. COAs for developing the critical technologies are available. Creation of a full scale NGMH prototype acquisition campaign is now possible.

Future Directions

This project provides a solid foundation for the actual implementation of an NGMH prototype acquisition campaign. However, that implementation must not be done in a vacuum. The critical technology list and potential industrial applications must be shared with the larger civilian and military community. The best venue for that information exchange is presentation and publication at a series of robotics and automation conferences. Emerging technologies can progress at a fascinating pace. There is a noticeable time lag between discovery and publication. Many findings are not published at all. The only efficient way to expose that level of information is to distribute

the critical technology targets with the clear understanding that the money is available to proceed with their research and development. Funding talks, and those seeking it will provide a wealth of feedback about the results and recommendations contained in this report.

Along with soliciting feedback, the search for coalition partners must intensify. In the course of this project, several commercial systems integrators expressed curiosity about the NGMH prototype. In order to convert that curiosity into positive action the business case analysis must be continued and refined. The military market for an NGMH type product is not sufficient to entice existing commercial companies to participate in its development. The construction, manufacturing, security, and commercial cleaning markets showed great potential, but a more detailed economic analysis is necessary. Only the lure of significant sales in the industrial or service sectors provides the level of incentive for a really productive collaboration. The manufacture of the NGMH by a consortium, of civilian sector industrial users and existing robot vendors, is the only way to guarantee the reliability and maintainability required for a cost effective solution over the systems life cycle.

Think joint, think dual use and aggressively pursue innovative coalitions and funding options. Build on the network developed in support of the UTAP and refuse to believe it can not be done. The NGMH concept is the future. Telerobotics will inhabit the flightline and the commercial sector. Make it so!

Endnotes

[1] Major Leahy was the director of RACE immediately prior to his ACSC assignment.

[2] Technical Order 1F-F15-33-1-2.

[3] Conducted during site visits to Mountain Home and Eglin AFBs during 1994.

[4] B.K. Cassiday, G.J. Koury and F.G. Pin, "Defining the Next Generation Munitions Handler" (Submitted for publication to the American Institute of Aeronautics and Astronautics, Dec 1994).

[5]Standard Manufacturing Company Inc, Ground Support Equipment for Aerial Stores Handling and Aircraft Maintenance, Engineering Specifications, Issue No. XVI, Dallas, TX, 1990.

[6] Munitions weighting over 1000 lbs are built up with suspension lugs 30 inches on center.

[7] The two bomb racks are the MAU-12 and the BRU-42. The BRU-42 is the newer version and has modifications that speed up the final hook-up procedures. But from the perspective of the jammer, the two bomb racks are equivalent.

[8] Crew chiefs at Mountain Home and Eglin AFBs, personal discussions with author, Summer 1994.

[9] The wave guide is a rectangular channel that runs the length of the missile body. Any deformations in the wave guide adversly impact target tracking.

[10] Picture was taken during a site visit to Mountain Home AFB.

[11] Missiles can also be attached to LAU-7 racks close to the fuselage. That process presents a set of challenges whose level of difficulty is between loading on launchers and bomb attachment. If a tele-assisted operator can load the launcher, he/she will be able to load the fuselage stations. Therefore, a description of that process is removed for the sake of clarity and brevity.

[12] There are multiple launch racks with subtle, but significant differences in configuration. As was the case with the bomb racks, from the perspective of the jammer they are equivalent.

[13] In fact, munitions loading does not appear to have been seriously considered at all. According to the Smsgt Tom Turner from the MMHE, the underbelly munition storage site for the F-22 places severe restrictions on the use of the current jammer. One of the main selling features of an NGMH could turn out to be it's ability to load the F-22.

[14]National Research Council, Advanced Robotics for Air Force Operations: Robotics: Leverage for the Future, (National Academic Press, Washington DC, 1989), v.

[15] Ibid.

[16] Telerobotics is the art and science of augmenting the human by blending the best individual skills and characteristics of the operator and robotic manipulator. A comprehensive overview of telerobotic fundamentals is in T. B. Sheridan, Telerobotics, automation, and human supervisory control, (Cambridge: MIT Press, 1991).

[17]M. B. Leahy Jr. and S. B. Petroski, "Telerobotics for Depot Modernization," Proceedings of the AIAA Conference on Intelligent Robots in Field, Factory, Service and Space (March 22-24, 1994); M. B. Leahy Jr. and S. B. Petroski, "Unified Telerobotics Architecture Project Program Overview," Proceedings of the Intelligent Robotic Systems Conference (1994).

[18] Memorandum of understanding between Robotics and Automation Center of Excellence (SA-ALC/TIEST) and Munitions Material Handling Equipment Focal Point (ASC/ALZ), subject: Robotic Technology as Applied to Munitions Handling, 13 April 1994

[19] University of Utah Center for Engineering Design, Robotics Applications to Munitions Operations Final Report, (February 1994); The CED is affiliated with the Sarcos Research Corp. which is world renowned for developing the human like hydraulic robotic devices employed in Walt Disney theme parks.

[20] Cartesian space is a technical term for the X Y Z roll pitch yaw world that we live in.

[21] In retrospect, the RACE/MMHE team had determined that operator acceptance was a COG for NGMH acquisition. The specific tasks in the ATD statement of work can be viewed as courses of action to achieved the desired effects on the COG.

[22] Department of Energy, Oak Ridge Operations Office. DOE/ORO Proposal No. 2146-H055-A1 with Air Force Materiel Command, Robotics and Automation Center of Excellence. Oak Ridge, TN, March 1994.

[23] This figure was produced by ORNL using IGRIP on a Silicon Graphics workstation and presented at the critical design review

[24] Toffler, Alvin and Heidi Toffler, War and Anti-War: Survival at the Dawn of the 21st Century, (Boston: Little Brown and Co., 1993); John A. Warden II, The Air Campaign: Planning for Combat, (Washington, DC: Pergamon Brassey's, 1989).

[25] FM 100-5, Operations, 14 June 1993.

[26] Advanced Robotics for Air Force Operations.

[27] University of Utah Center for Engineering Design.

[28] T. B. Sheridan, Telerobotics, automation, and human supervisory control, (Cambridge: MIT Press, 1991).

[29] University of Utah Center for Engineering Design.

[30] The following requirements are based on Major Leahy's personal involvement and subsequent results from the preliminary design review.

[31] A redundant manipulation system allows multiple joint values to provide the same cartesian position. Multiple arm poses provide a greater ability to reach around obstacles

and into constrained places. The most common example of a redundant manipulator is the 7 DOF human arm.

[32] The F-15E provides the worst case scenario for NGMH reach and obstacle avoidance. However, the salient kinematic features of all current and planned fighters were considered. The F-16 TER rack provides the low reach point, while the F-22 dicates the overall mobility platform height.

[33] Jack Hollingum, "ABB Focus on Lean Robotization," Industrial Robot 21, no. 4 (1994): 15-16; R-Model J Controller, New Release Product Summary Sheet, Auburn Hills, GMFanuc Robotics, (1992); CIMCORP Inc. Precision System, CIMCORP Product Summary, CIMROC 4000 Robot Controller, St Paul, no date, [1994]; Jet Propulsion Laboratory, A Generic Telerobotics Architecture for C-5 Industrial Processes Final Report, (August 1993); Dr. Steven Murphy, robot control system engineer for ABB, email, Winter 1995.

[34] Jet Propulsion Laboratory, A Generic Telerobotics Architecture for C-5 Industrial Processes, Final Report, (August 1993).

[35] The following three references describe architecture development at three major government laboratories: Robert J. Anderson, "SMART: A Modular Architecture for Robotics and Teleoperation," Proceedings of the IEEE International Conference on Robotics and Automation (IEEE Computer Society Press, 1993) 2: 416-21; Paul G. Backes and others. "A Prototype Ground-Remote Telerobot Control System," Robotica. 12: 481-490 (1994); Ronald Lumia, "Using NASREM for telerobot control system development," Robotica 12 (1994): 505-512.

[36] Leahy and Petroski, "Unified Telerobotics Architecture Project Program Overview"; "Telerobotics for Depot Modernization".

[37] Jet Propulsion Laboratory, A Generic Telerobotics Architecture for C-5 Industrial Processes Final Report (August 1993); P. G. Backes, W. Zimmerman, and M.B. Leahy Jr, "Telerobotics Applications to Aircraft Maintenance and Remanufacturing," Proceedings of the International Symposium on Robotics and Manufacturing (August 1994).

[38] Ronald Lumia and others, Unified Telerobotic Architecture Project (UTAP) Interface Document. Draft Report, (Intelligent Systems Division, NIST, June 1994).

[39] Leahy and Petroski, "Unified Telerobotics Architecture Project Program Overview"; Advanced Cybernetics Group, UTAP Phase II Validations Video Tape (Sunnyvale CA, 1994).

[40] Eugene I Riven, Mechanical Design of Robots, (New York: McGraw-Hill, 1988).

[41] The first set of experimental results to clearly verify the potential of dynamic compensation on robot trajectory tracking performance were conducted at RPI, CMU and MIT independently and published at the 1986 IEEE International Conference on Robotics and Automation.

[42] Hollingum, "ABB Focus on Lean Robotization".

[43] N. Sepehri and others, "Resolved-Mode Teleoperated Control of Heavy-Duty Hydraulic Machines," Transactions of the ASME Journal of Dynamic Systems, Measurement, and Control 116 (June 1994): 232-240.

[44] Robot conferences are littered with adaptive control papers. A good snapshot of the field is contained in: Spyros G. Tzafestas, ed., Applied Control: Current Trends and Modern Methodologies, (New York: Marcel Dekker, Inc, 1993).

[45] Dextrous Teleoperation Systems. Product Specification Sheet. Salt Lake City, UT: Sarcos, 1994.

[46] John J. Craig, Introduction to Robotics Mechanics & Control, (Reading, MA: Addison-Welsey, 1986).

[47] An extensive literature survey of past work is contained in Nitish Mandal and Shahram Payandeh, "Control Strategies for Robotic Contact Tasks: An Experimental Study," Journal of Robotic Systems 12, no. 1 (1995): 67-92.

[48] Richard Volpe and Pradeep Khosla, "A Theoretical and Experimental Investigation of Impact Control for Manipulators," International Journal of Robotic Research 12, no. 4 (August 1993): 351-65.

[49] Volpe and Khosla; L. S. Wilfinger, John Wen and Steve Murphy, "Integral Force Control with Robustness Enhancement," Proceedings of the IEEE International Conference on Robotics and Automation (IEEE Computer Society Press, 1993) 1: 100-05; K. Youcef-Toumi and D.A. Gutz, "Impact and Force Control: Modeling and Experiments," Transactions of the ASME Journal of Dynamic Systems, Measurement, and Control 116, no. 1 (March 1994): 89-98.

[50] Advanced Cybernetics Group, UTAP Phase II Validations Video Tape, (Sunnyvale CA, 1994).

[51] Systems integrators, personal observations and conversations with the author.

[52] Zhi-Xin Peng and Norihiko Adachi, "Compliant Motion Control of Kinematically Redundant Manipulators," IEEE Transactions on Robotics and Automation 9, no. 6 (December 1993): 831-7.

[53] Dextrous Teleoperation Systems.

[54] NGMH ATD CDR, consenus opinion of the operators and engineers in attendance.

[55] Mandal and Payandeh.

[56] Volpe and Khosla.

[57] James K. Mills and David M. Lokhorst, "Stability and Control of Robotic Manipulators During Contact/Noncontact Task Transition," IEEE Transactions on Robotics and Automation 9, no. 3 (June 1993): 335-45.

[58] Yangming Xu, John M. Hollerbach and Donghai Ma, "Force and Contact Transient Control using Nonlinear PD Control," Proceedings of the IEEE International Conference on Robotics and Automation (IEEE Computer Society Press, 1994): 924-30.

[59] A genuine concern given the poor resolution and high signal noise of existing commercial force sensors.

[60] Mandal and Payandeh.

[61] Youfu F. Li, "On the use of velocity feedback for robot impact control," Robotics and Autonomous Systems 13 (1994): 297-305.

[62] K. Youcef-Toumi and D.A. Gutz, "Impact and Force Control: Modeling and Experiments," Transactions of the ASME Journal of Dynamic Systems, Measurement, and Control 116, no. 1 (March 1994): 89-98.

[63] James M. Hyde and Mark R. Cutkosky, "Contact Transition Control: An Experimental Study," Proceedings of the IEEE International Conference on Robotics and Automation (IEEE Computer Society Press, 1993): 363-68.

[64] J. M. Hyde, Multiple Mode Vibration Suppression in Controlled Flexible Systems, MIT Artifical Intelligence Laboratory Technical Report #1295, (MIT, Cambridge MA, June 1991).

[65] The common practice of calculating velocity by differencing the position values over the sampling period is susceptible to corruption by noise. The usual solution is to high pass filter the position measurements.

[66] Jin-Oh Kim and others, "Exploiting Redundancy to Reduce Impact Force," Journal of Intelligent and Robotic Systems 9 (1994): 273-90.

[67] The National Center for Manufacturing Science (NCMS) has held several flexible assembly workshops over the last year. They are currently funding a project in the area of flexible light assembly and are exploring both medium and large part assembly projects; Increase in assembly related papers in the 1994 Proceedings of the International Conference on Robotics and Automation.

[68] Consult the John J Craig text for more details on RCC functions.

[69] John J Craig.

[70]Joseph M. Schimmels and Michael A. Peshkin, "Admittance Matrix Design for Force Guided Assembly," IEEE Transactions on Robotics and Automation 8, no. 2 (April 1992): 213-227.

[71] Joseph M. Schimmels and Michael A. Peshkin, "Force Assembly with Friction," IEEE Transactions on Robotics and Automation 10, no. 4 (August 1994): 465-79.

[72] Based on personal experience with FANUC and Adept Technologies Inc. robot control products and ABB motion control product specifications.

[73] The other major control systems also have this capability. CIMCORP calls their version Real-Time Path Modification (RPM). RPM allows path modication at 20Hz or every 5 ms. The latest Adept controller updates every 2 ms.

[74]Advanced Cybernetics Group.

[75] Richard D. Klafter and others, Robotic Engineering: An Integrated Approach, (Englewood Cliffs: Prentice Hall, 1989).

[76] Hollingum; GMFanuc Robotics, 1992; CIMCORP Inc. Precision Systems; Adept Motion Control Technical Manuals, Adept Technologies Inc., 1993.

[77] R-Model J Controller.

[78] LARPS is being developed by United Technology Waterjet Systems Division to paint KC-135 sized aircraft. The statement about trajectory generation is from a conversation with their chief control systems engineering in the summer of 1994.

[79] Quote from Tommy Klein, ABB robotics marketing director in "ABB Robotics New Product line Meeting the Need for Lean Robotization," Industrial Robot 21, no. 2 (1994): 43.

[80] B. Siciliano, "Kinematic Control of Redundant Robot Manipulators: A Tutorial," Journal of Intelligent and Robotic Systems 3 (1990): 201-212.

[81] Ibid; Francois G. Pin and other,. "A New Solution Method for the Inverse Kinematic Joint Velocity Calculations of Redundant Manipulators," Proceedings of the IEEE International Conference on Robotics and Automation (IEEE Computer Society Press, 1994): 96-102.

[82] David Lim and others, "A Real-Time Control System for a Mobile Dexterous 7 DOF Arm," Proceedings of the IEEE International Conference on Robotics and Automation (IEEE Computer Society Press, 1994): 1188-93.

[83] H. M. Seraji, Long and T.S. Lee, "Motion Control of 7-DOF Arms: The Configuration Control Approach," IEEE Transactions on Robotics and Automation 9, no. 2 (April 1993): 125-39.

[84] Ibid.

[85] David Lim and others.

[86] Francois Pin and others.

[87] Ibid.

[88] For a review of model-based approaches refer to Stephen Strenn and others, "Collision Avoidance Algorithm for Telerobotics Applications," Proceedings of the IEEE International Conference on Robotics and Automation (IEEE Computer Society Press, 1994): 359-65.

[89] One could argue that the pylon locations present a known set of obstacles and therefore models could be developed for that workcell. However, the system would have to store a large variety of models and requires significant operator input for model selection, or constant use of a worst case obstacle scenario model. Neither of those approaches is efficient or applicable to the obstacles that are not permanently attached to the airframe. Systems for detecting the obstacles are discussed in the sensor section

[90] A. A. Maciejewski and C. A. Klein, "Obstacle Avoidance for Kinematically Redundant Manipulators in Dynamically Varying Environments," The International Journal of Robotics Research 4, no. 3 (Fall 1985): 109-117.

[91] J. T. Feddema and J. L. Novak, "Whole Arm Obstacle Avoidance for Teleoperated Robots," Proceedings of the IEEE International Conference on Robotics and Automation (IEEE Computer Society Press, 1994): 3303-9.

[92] Ibid.

[93] Seraji; Francois Pin and others.

[94] K. Glass and others, "On-Line Collision Avoidance for Redundant Manipulators," Proceedings of the IEEE International Conference on Robotics and Automation (IEEE Computer Society Press, 1993): 36-43.

[95] John Jansen, "Hydraulic Simulation Preliminary Results," briefing, NGMH ATD CDR. ORNL, 18 January 1995.

[96] Rotary actuators meeting the lower links power requirements would have weighted over one thousand pounds. The actuators are shown to scale in the NGMH concept drawing in Figure 7.

[97] For a good overview of the importance of system frequency response and how to estimate it consult: Au K Burton, "Closing the loop on hydraulic control," Machine Design. 66, no. 18 (September 26, 1994): 93-97.

[98] Ibid.

[99] F. M. Smith and others, "Telerobotic Manipulator for Hazardous Environments," Journal of Robotic Systems 9, no. 2 (March 1992): 251-260.

[100] Dextrous Teleoperation Systems.

[101] John Jansen.

[102] NGMH ATD CDR performance requirements review.

[103] The individual inaccuracies in link positions are reflected forward through the remainder of the kinematic chain. For a long reach manipulator like the NGMH, very small errors in lower link accuracy have dramatic impact on end-effector performance.

[104] At the 1994 Annual Robotics Industries Association trade show in Detroit, a FANUC vertically articulated robot was manipulating an engine block weighting 600 lbs.

[105] TITAN II: Telerobotic Manipulator System. Product Specification Sheet. Davis CA: Schilling Development, 1992

[106] Au K. Burton, "Closing the loop on hydraulic control," Machine Design 66, no.18 (September 26, 1994): 93-97.

[107] Analog controllers must be laboratory bench tested.

[108] Dextrous Teleoperation Systems.

[109] A basic overview is found in: Mark W. Spong and M. Vidyasagar, Robot Dynamics and Control, (New York: John Wiley & Sons, 1989).

[110] Brian Armstrong-Helouvry, Control of Machines with Friction, (Norwell MA: Kluwer Academic, 1991); Stephen M. Phillips and Ballou, Kevin R, "Friction Modeling and Compensation for an Industrial Robot," Journal of Robotic Systems 10, no. 7 (Oct 1993): 947-71.

[111] Tsu-Chin Tsao and Masayoshi Tomizuka, "Robust Adaptive and Repetitive Digital Tracking Control and Application to a Hydraulic Servo for Noncircular Machining," Transactions of the ASME Journal of Dynamic Systems, Measurement, and Control 116, no. 1 (March 1994): 24-32.

[112] S. E. Salcudean and other, "A Six Degree-of-Freedom, Hydraulic, One Person Motion Simulator," Proceedings of the IEEE International Conference on Robotics and Automation (IEEE Computer Society Press, 1994): 2437-43.

[113] Smith, F. M. and others. "Miniature High Performance Servovalves," Presented to the International Fluid Power Exposition and Technical Conference, Chicago, IL. March 24-26, 1992.

[114] Ibid.

[115] Dr. Francois Pin, ORNL, personal conversation with author.

[116] Ibid.

[117] Salcudean.

[118]Steve C Jacobsen and others. "High Performance, High Dexterity, Force Reflective Teleoperator II," Presented to the ANS Topical Meeting on Robotics and Remote Systems, Albuquerque, NM. February 24-27, 1991.

[119] As briefed at the CDR.

[120] Ibid.

[121] For a more complete description of force/torque sensor design consult one of the robotics textbooks listed in the bibliography.

[122] JR3 Inc. Multi-Axis Load Cell Technology Product Information. (Woodland, CA, 1994).

[123] An average force sensor system costs under $7,500.

[124] JR3 Inc.

[125] Personnel correspondence in response to an email information request.

[126] Ibid.

[127] Assurance Technologies, Inc. Force Torque Sensor System Product Information. (Garner, NC, 1994).

[128] Dr. Francois Pin, ORNL, telephone conversation with author.

[129] G. Hirzinger, "Multisensory shared autonomy and tele-sensor programming - Key issues in space robotics," Robotics and Autonomous Systems 11 (1993): 141-162.

[130] Antonio Bicchi, "A criterion for optimal design of multi-axis force sensors," Robotics and Autonomous Systems 10 (1992): 269-286.

[131] Makoto Kaneko, "A New Design of Six-Axis Force Sensors," Proceedings of the IEEE International Conference on Robotics and Automation (IEEE Computer Society Press, 1993) 1: 961-7.

[132] Darrel K. Kleinke and H. Mehmet Uras, "A magnetostrictive force sensor," Review of Scientific Instruments 65, no. 5 (May 1994): 1699-710.

[133]Edward Cheung and Vladimir Lumelsky, "Development of Sensitive Skin for a 3D Robot Arm Operating in an Uncertain Environment," Proceedings of the IEEE International Conference on Robotics and Automation (IEEE Computer Society Press, 1989): 1056-61.

[134] J. T. Feddema and J. L. Novak.

[135] Whole-Arm Obstacle Avoidance Utilizing ASIC Technology, an overview presented during the NGMH CDR.

[136] CED researchers, personal conversations with author during a site visit in February 1994.

[137] NGMH ATD Critical Design Review, 16-17 January 1995 at Oak Ridge National Laboratories.

[138] Cheryl Pellerin, "Twenty-first Century Sentries," Industrial Robot 20, no. 2 (1993): 15-17.

[139] Ibid.

[140] Ferenc Weiczer, Applying a New Wheel to Steering and Locomotion of Mobile Robots Internal Report, (Chalmers University of Technology, Gothenburg Sweden, 1993).

[141] Francois G. Pin and Stephen M. Killough, "A New Family of Omindirectional and Holonomic Wheeled Platforms for Mobile Robots," IEEE Transactions on Robotics and Automation 10, no. 4 (August 1994): 480-89.

[142] For more detailed information on UW consult the 1987 Journal of Robotic Systems article by Muir and Neumann listed in the bibliography.

[143] G. L. Baisdell, "Performance of an omnidirectional wheel on snow and ice," Naval Engineering Journal 103, no. 1 (1991): 34-41.

[144] A video illustrating the evaluations is available from the Naval Air Warfare Center at Lakehurst NJ.

[145] Ibid; Major Leahy gained hands on experience with the smaller platform at a workshop in DC in summer 1994.

[146] L. A. Phillips, "Reinventing the Wheel," Technology Review 95 (N/D 1992): 11-12 .

[147] Francois G. Pin and Stephen M. Killough.

[148] Ibid.

[149] Ibid.

[150] Ibid.

[151] "Robot Programming Tool Creates Specialist Software," Industrial Robot 21, no. 1 (1994): 40; Hollingum.

[152] Ibid.

[153] A complete listing off all types of devices is beyond the scope and relevance of this discussion. The following references provide some representative examples: Hayati, S. and J. Balaram, "Supervisory Telerobotics Testbed for Unstructured Environments," Journal of Robotic Systems 9, no. 2 (March 1992): 261-80; Michael C. Nechyba and Yangsheng Xu, "SM2 for New Space Station Structure: Autonomous Locomotion and Teleoperation Control," Proceedings of the IEEE International Conference on Robotics and Automation (IEEE Computer Society Press, 1994): 1765-70; Lim and others.

[154] The most popular of these is manufactured by Exos Corporation and is designed to map human finger position to a mechanical hand.

[155] Sheridan; Louis B. Rosenberg, How to Assess the Quality of Force-Feedback Systems Company Brocedure, (Immersion Corp, CA, 1994).

[156] Analysis was conducted by Dr John Draper at ORNL during the first phase of the NGMH ATD project.

[157] A force sensor only measures forces in front of it.

[158] John V. Draper, NGMH/ATD Human-Machine Interface, briefing, NGMH ATD CDR, ORNL, 18 January 1995.

[159] This approach is similar to the final CED recommendation. However, the CED study provided no specifics.

[160] An ORNL analysis of the insertion task suggests the simultaneous rotation and translation is not necessary.

[161] As originally envisioned the deadman switch would be mounted behind the horizontally mounted joystick. The operator would close the switch when his hand wrapped around the joystick. The concern that surfaced is what protects the operator from tripping and pulling the munition down ontop of themselves, since the natural reaction of a falling individual is to retain a grip on the joystick.

[162] Lim and others.

[163] Yasuyoshi Yokokohji, "Operation Modes for Cooperating with Autonomous Functions in Intelligent Teleoperation Systems," Proceedings of the IEEE International Conference on Robotics and Automation (IEEE Computer Society Press, 1993) 3: 510-15.

[164] NIST UTAP Interface specification.

[165] An important distinction to remember is that the list represents technologies that are critical for the NGMH prototype, not necessarily the ATD.

[166] Held in McLean VA on 15-16 February 1995.

[167] The Red group breakout session was lead by Major Leahy on 16 Feb 1995 and included 15 participants from academia, government and industry.

[168] Leahy and Petroski, "Unified Telerobotics Architecture Project Program Overview".

[169] Dr. Francois Pin, ORNL, personal conversations with author.

[170] The SBIR budget is a line item in the Air Force budget. The Air Force part of the program has been administered by AFMC. A successful SBIR proposal provides the winner with up to a $100K phase one grant and the potential for a $500K phase two follow-on project.

[171] NGMH ATD CDR, participant comments overheard by author.

[172] NGMH ATD CDR, recommendation made during.

[173] Politics is a contextual element that impacts this decision. Given that a prototype effort will not be funded without the creation of a joint operational requirement, the Navy must feel that their previous investment in omnidirectional technology is not being wasted. However, the Air Force can not afford to just white wash the documented concerns with their design.

[174] Sandia National Laboratory and ORNL engineers, personal knowledge gained from numerous discussions.

[175] Conclusion from the ARPA Rapidly Deployable Taskable Machines Workshop held at Mitre Corp. in Reston VA on 15-16 February 1995.

[176] Francois G. Pin and others, "A New Solution Method for the Inverse Kinematic Joint Velocity Calculations of Redundant Manipulators" Proceedings of the IEEE International Conference on Robotics and Automation (IEEE Computer Society Press, 1994): 96-102.

[177] Another simulation option is to attached the 7-DOF arm currently on HERMES III to the existing Navy universal wheel prototype. This has the advantage of also supporting a more complete evaluation of that mobility platform. The cost is the expense of reconfiguring the two mobility platforms.

[178] Through the wonders of the INTERNET their presence at the evaluations does not require a plane trip.

[179] Full collaboration negates the academic squabbling that usually proceeds the publication of comparative studies.

[180] Attempt to slam your fist into a table and watch how your elbow moves.

[181] While one could argue that the cost effective approach to the obstacle avoidance research is to only fund the algorithm that performed best in the initial evaluations, that is an unrealistic false economy. First, no one algorithm is best for all applications and the Air

Force will have many non-NGMH telerobotic problems to solve. And second, the basic research funding mechanisms currently in place make funding in small blocks inefficient. Finally, it is in the Air Force's best interest to foster increased collaboration between national laboratories. Each brings special skills to the table and we want good working relationships with both.

[182] James F. Andary and Peter D. Spidaliere, "The Development Test Flight of the Flight Telerobotic Servicer: Design Description and Lessons Learned," IEEE Transactions on Robotics and Automation 9, no. 5 (Oct 1993): 664-74.

[183]John V. Draper, NGMH/ATD Human-Machine Interface, briefing, NGMH ATD CDR, 18 January 1995.

[184] IGRIP is a 3D graphical robot simulation package marketed by Deneb Robotics Inc. RACE, ORNL, and AFIT have the package.

[185] Use of the HERMIES III platform provides a fairly accurate approximation of the ATD and provides mobility issues to be addressed. However, the Schilling Titan arms offer the opportunity to utilize more realistic munition mock-ups. Leave that choice to the bricklayers.

[186] Jim Hewit. "Mechatronics: More than Just a Name," Industrial Robot 20, no. 6 (1993): 3-4.

[187] For purposes of this discussion, a hydraulic actuation system contains both the actuator and servovalves.

[188] See details in Chapter Two.

[189] The MMHE focal point and ACC representatives both expressed a desire not to increase the number of loading table permutations.

[190] AFIT has also purchased a redundant hydraulic arm, but a current lack of students prevents them from being the prime investigator

[191] Dr. Nick Weil of NCMS has extended a formal invitation for Major Leahy to present a briefing on USAF requirements at the upcoming national workshop of flexible redundant assembly to be held in Orlando in May 1995.

[192] Workshop Breakout Group Red members, public comments during breakout session, 16 Feb 1995.

[193] Mark B. Mikula, "Dual Use- It Makes Sense," Unmanned Systems 12, no. 2 (Spring 1994): 42-43.

[194] Norman Augustine, "Martin Marrietta CEO Speaks to Program Manager," Program Manager 24, no.2 (March-April 1995): 2-6.

[195] Ronald Lumia, NIST project manager, personnal conversation with author; Pradeep Khosla, ARPA project manager, personnal conversation with author.

[196] CMSgt Good, HQ ACC/LG, official estimated provided to RACE in November 1994.

[197] National Research Council.

[198] Ibid, 26.

[199] ORNL is currently under contract to conduct a feasibility study for a next generation Patriot missile loading system. The potential for collaboration between that study and the NGMH program are obvious.

[200] Kenneth Brayton, "U.S. Navy Underway Replenishment," Briefing presented at the ARPA Taskable Machines Workshop, McLean, VA, February 15-16, 1995.

[201] Unmanned Ground Vehicle/System Joint Project Office, Unmanned Ground Vehicle Master Plan (July 1994): 28.

[202] Ibid.

[203] Steven J. Herman, "EOD Robotics Comes of Age," Ordnance, (November 1992): 7.

[204] "Weak Growth Forecast for Automated Material Handling in Near Future, but Long Term Prospects Look Brighter," Industrial Robot 21, no. 4, (1994): 7-8.

[205] Cheryl Pellerin, "Twenty-first Century Sentries".

[206] US Department of Labor, Bureau of Statistics, Employment and Wages Annual Averages, 1990, November 1991, Bulletin 2393.

[207] Abraham Warzawski and Dwight A. Sangrey, "Robotics in Building Construction," Journal of Construction Engineering and Management, 3, no. 3 (Sept 1985): 269-270.

[208] Robert, D. Wing, "Recent Japanese Progress in Construction Robotics," Industrial Robot 20, no. 4, (1993): 32-34.

[209] Warszawski and Sangrey, 269.

[210] John Everett and Alexander Slocum, "Automation and Robotics Opportunities: Construction versus Manufacturing," Journal of Construction Engineering and Management 120, no. 2 (June 1994): 444.

[211]US Department of Labor, Bureau of Statistics, 5.

[212] Ibid.

[213] Joe Engelberger, "The Service Robot Frontier," Industrial Robot 20, no. 5 (1993): 4.

[214] Klafter and others..

[215] "Robotics Application Extends Automation in Auto Assembly," Industrial Engineering (November 1993): 20.

[216] US. Department of Labor, Bureau of Statistics, 14.

[217] Ibid.

[218]Cheryl Pellerin, "Twenty-first Century Sentries".

[219] Ibid.

[220] US. Department of Labor, Bureau of Statistics, 23.

[221] Cheryl Pellerin, "Service Robots: Cleaning up in the 1990s," Industrial Robot 20, no. 5, (1993): 18-21.

[222] Ibid.

[223] Ibid.

[224] Joseph Engelberger, ATI Corp, personnal conversation with author.

[225] US. Department of Labor, Bureau of Statistics.

Bibliography

"ABB Robotics New Product line Meeting the Need for Lean Robotization," Industrial Robot. 21(2): 43 (1994).

"Adept Introduces Service Expert PC," Industrial Robot. 20(1): 41 (1993).

Andary, James F. and Peter D. Spidaliere. "The Development Test Flight of the Flight Telerobotic Servicer: Design Description and Lessons Learned," IEEE Transactions on Robotics and Automation. 9(5): 664-74 (Oct 1993).

Anderson, Robert J. "SMART: A Modular Architecture for Robotics and Teleoperation," Proceedings of the IEEE International Conference on Robotics and Automation. 2: 416-21. IEEE Computer Society Press, 1993.

Armstrong-Helouvry, Brian. Control of Machines with Friction. Norwell MA: Kluwer Academic, 1991.

Asada, Haruhiko and Kamal Youcef-Toumi. Direct-Drive Robots: Theory and Practice. Cambridge, MA: MIT Press, 1987.

Asimov, Issac and Karen Frenkel. Robots, Machines in Man's Image. New York: Harmony Books, 1985.

Augustine, Norman. "Martin Marrietta CEO Speaks to Program Manager," Program Manager. 14(2): 2-6 (March-April 1995).

Backes, Paul G. and others. "A Prototype Ground-Remote Telerobot Control System," Robotica. 12: 481-490 (1994).

Backes, P. G., W. Zimmerman, and M.B. Leahy Jr. "Telerobotics Applications to Aircraft Maintenance and Remanufacturing," Proceedings of the International Symposium on Robotics and Manufacturing. August 1994.

Baisdell, G. L. "Performance of an Omnidirectional Wheel on Snow and Ice," Naval Engineering Journal. 103(1): 34-41 (1991).

Bicchi, Antonio. "A Criterion for Optimal Design of Multi-Axis Force Sensors," Robotics and Autonomous Systems. 10: 269-286 (1992)

Boddy, C. L. and J. D. Taylor. "Whole-Arm Reactive Collision Avoidance Control of Kinematically Redundant Manipulators," Proceedings of the IEEE International Conference on Robotics and Automation. 3: 382-6. IEEE Computer Society Press, 1993.

Burton, Au K. "Closing the loop on hydraulic control," Machine Design. 66(18): 93-97 (September 26, 1994).

Burton, Au K. "Digital hydraulics enhance control," Machine Design. 66(20): 63-67 (October 24, 1994).

Caldwell, Darwin G. and others. "Tele-Presence: Visual, Audio and Tactile Feedback and Control of a Twin Armed Mobile Robot," Proceedings of the IEEE International Conference on Robotics and Automation. 244-49. IEEE Computer Society Press, 1994.

Cassiday, B.K., G.J. Koury and F.G. Pin. "Defining the Next Generation Munitions Handler," submitted for publication to the American Institute of Aeronautics and Astronautics, Dec 1994.

Cheung, Edward and Vladimir Lumelsky. "Development of Sensitive Skin for a 3D Robot Arm Operating in an Uncertain Environment," Proceedings of the IEEE International Conference on Robotics and Automation. 1056-61. IEEE Computer Society Press, 1989.

CIMROC 4000 Robot Controller. Product Specification Sheet. St. Paul: CIMCORP Inc. Precision Systems, no date.

Colgate, J. Edward. "Robust Impedance Shaping Telemanipulation," IEEE Transactions on Robotics and Automation. 9(4): 374-84 (August 1993).

Craig, John J. Introduction to Robotics Mechanics & Control. Reading, MA: Addison-Welsey, 1986.

Department of the Army. Operations. FM 100-5. Washington: HQ USA, 14 June 1993.

Department of Energy, Oak Ridge Operations Office. DOE/ORO Proposal No. 2146-H055-A1 with Air Force Materiel Command, Robotics and Automation Center of Excellence. Oak Ridge, TN, March 1994.

Dextrous Teleoperation Systems. Product Specification Sheet. Salt Lake City, UT: Sarcos, 1994.

Engelberger, Joe. "The Service Robot Frontier," Industrial Robot. 20(5): 3-4 (1993).

Ekalo, Y. and M. Vukobratovic. "Robust and Adaptive Position/force Stabilization of Robotic Manipulators in Contact Tasks," Robotica. 11: 373-86 (1993).

Everett, John and Alexander Slocum . "Automation and Robotics Opportunities: Construction versus Manufacturing," Journal of Construction Engineering and Management. 120(2): 443-452 (June 1994).

Feddema, J. T. and J. L. Novak. "Whole Arm Obstacle Avoidance for Teleoperated Robots," Proceedings of the IEEE International Conference on Robotics and Automation. 3303-9. IEEE Computer Society Press, 1994.

Glass, K and others. "On-Line Collision Avoidance for Redundant Manipulators," Proceedings of the IEEE International Conference on Robotics and Automation. 36-43. IEEE Computer Society Press, 1993.

Glosser, Gregory D. and Wyatt S. Newman. "The Implementation of a Natural Admittance Controller on an Industrial Manipulator," Proceedings of the IEEE International Conference on Robotics and Automation. 1209-15. IEEE Computer Society Press, 1994.

Ground Support Equipment for Aerial Stores Handling and Aircraft Maintenance. Engineering Specifications, Issue No. XVI, Dallas, TX: Standard Manufacturing Company, Inc., 1990.

Hayati, S. and J. Balaram. "Supervisory Telerobotics Testbed for Unstructured Environments," Journal of Robotic Systems. 9(2): 261-80 (March 1992).

Herman, Steven J. "EOD Robotics Comes of Age," Ordnance. (November 1992).

Hewit, Jim. "Mechatronics: More than Just a Name," Industrial Robot. 20(6): 3-4 (1993).

Hirzinger, G. "Multisensory shared autonomy and tele-sensor programming - Key issues in space robotics," Robotics and Autonomous Systems. 11: 141-162 (1993).

Hollingum, Jack, "ABB Focus on Lean Robotization," Industrial Robot. 21(4): 15-16 (1994).

Hyde James M. and Mark R. Cutkosky. "Contact Transition Control: An Experimental Study," Proceedings of the IEEE International Conference on Robotics and Automation. 363-68. IEEE Computer Society Press, 1993.

Jacobsen, S.C. and others. "High Performance, High Dexterity, Force Reflective Teleoperator II," Presented to the ANS Topical Meeting on Robotics and Remote Systems, Albuquerque, NM. February 24-27, 1991.

Jet Propulsion Laboratory. A Generic Telerobotics Architecture for C-5 Industrial Processes. Final Report, August 1993.

Kaneko Makoto. "A New Design of Six-Axis Force Sensors," Proceedings of the IEEE International Conference on Robotics and Automation. 1: 961-7. IEEE Computer Society Press, 1993.

Kim, Jin-Oh and others. "Exploiting Redundancy to Reduce Impact Force," Journal of Intelligent and Robotic Systems. 9: 273-90 (1994).

Klafter, Richard D. and others. Robotic Engineering: An Integrated Approach. Englewood Cliffs: Prentice Hall, 1989.

Kleinke, Darrell K. and H. Mehmet Uras. "A magnetostrictive force sensor," Review of Scientific Instruments. 65(5): 1699-710 (May 1994).

Krepinevich, Andrew, F., Jr. "The Military-Technical Revolution: A Preliminary Assessment," OSD/Office of Net Assessment, July 1992.

Koshiyama, Atsushi and Kazuo Yamafuji. "Design and Control of an All-Direction Steering Type Mobile Robot," International Journal of Robotic Research. 12(5): 411-19 (October 1993).

Leahy, M. B. Jr. and S. B. Petroski. "Telerobotics for Depot Modernization," Proceedings of the AIAA Conference on Intelligent Robots in Field, Factory, Service and Space, March 22-24, 1994.

Leahy, M. B. Jr. and S. B. Petroski, "Unified Telerobotics Architecture Project Program Overview," Proceedings of Intelligent Robotic Systems Conference. 1994.

Leahy, M. B. Jr. and P. V. Whalen, "Direct Adaptive Control for Industrial Manipulators," Proceedings of the IEEE International Conference on Robotics and Automation. 1666-72. IEEE Computer Society Press, 1991.

Li, Youfu F. "On the Use of Velocity Feedback for Robot Impact Control," Robotics and Autonomous Systems. 13: 297-305 (1994).

Lim, David and others. "A Real-Time Control System for a Mobile Dexterous 7 DOF Arm," Proceedings of the IEEE International Conference on Robotics and Automation. 1188-93. IEEE Computer Society Press, 1994.

Lumia, Ronald. "Using NASREM for Telerobot Control System Development," Robotica. 12: 505-512 (1994).

Lumia, Ronald and others. Unified Telerobotic Architecture Project (UTAP) Interface Document. Draft Report, Intelligent Systems Division, NIST, June 1994.

Maciejewski, A. A. and C. A. Klein. "Obstacle Avoidance for Kinematically Redundant Manipulators in Dynamically Varying Environments," The International Journal of Robotics Research. 4(3): 109-117 (Fall 1987).

Mandal, Nitish and Shahram Payandeh. "Control Strategies for Robotic Contact Tasks: An Experimental Study," Journal of Robotic Systems. 12(1): 67-92 (1995).

Marth, G. T. and others. "An Event Based Approach to Impact Control: Theory and Experiments," Proceedings of the IEEE International Conference on Robotics and Automation. 918-23. IEEE Computer Society Press, 1994.

Memorandum of understanding between Robotics and Automation Center of Excellence (SA-ALC/TIEST) and Munitions Material Handling Equipment Focal Point (ASC/ALZ), subject: Robotic Technology as Applied to Munitions Handling, 13 April 1994.

Mikula, Mark B. "Dual Use- It Makes Sense," Unmanned Systems. 12(2): 42-43 (Spring 1994).

Mills, James K and David M. Lokhorst. "Stability and Control of Robotic Manipulators During Contact/Noncontact Task Transition," IEEE Transactions on Robotics and Automation. 9(3): 335-45 (June 1993).

Muir, P. F. and C. P. Neumann. "Kinematic Modeling of Wheeled Mobile Robots," Journal of Robotic Systems. 4: 281-340 (1987).

National Research Council. Advanced Robotics for Air Force Operations: Robotics: Leverage for the Future. National Academic Press, Washington DC, 1989.

Nechyba, Michael C. and Yangsheng Xu. "SM2 for New Space Station Structure: Autonomous Locomotion and Teleoperation Control," Proceedings of the IEEE International Conference on Robotics and Automation. 1765-70 IEEE Computer Society Press, 1994.

Parker Cylinder Innovations. Performance Specification 28-29. Des Plaines IL: Parker Fluidpower Cylinder Division, no date [1994].

Peng, Zhi-Xin and Norihiko Adachi. "Compliant Motion Control of Kinematically Redundant Manipulators," IEEE Transactions on Robotics and Automation. 9(6): 831-7 (December 1993).

Pellerin, Cheryl. "Service Robots: Cleaning up in the 1990s," Industrial Robot. 20(5): 18-21 (1993).

Pellerin, Cheryl. "The Market for Robotic Services," Industrial Robot. 20(2): 12-14 (1993).

Pellerin Cheryl. "Twenty-first Century Sentries," Industrial Robot. 20(2): 15-17 (1993).

Phillips, L. A. "Reinventing the Wheel," Technology Review. 95: 11-12 (N/D 1992).

Phillips, Stephen M. and Ballou, Kevin R. "Friction Modeling and Compensation for an Industrial Robot," Journal of Robotic Systems. 10(7): 947-71 (Oct 1993).

Pin, Francois G. and others. "A New Solution Method for the Inverse Kinematic Joint Velocity Calculations of Redundant Manipulators," Proceedings of the IEEE International Conference on Robotics and Automation. 96-102. IEEE Computer Society Press, 1994.

Pin, Francois G. and Stephen M. Killough. "A New Family of Omindirectional and Holonomic Wheeled Platforms for Mobile Robots," IEEE Transactions on Robotics and Automation. 10(4): 480-89 (August 1994).

Porter Michael E. The Competitive Advantage of Nations. New York: The Free Press, 1990.

Puttre, Michael. "Embedding knowledge in robot controllers," Mechanical Engineering. 116: 77-80 (June 1994).

R-Model J Controller. New Release Product Summary Sheet. Auburn Hills: GMFanuc Robotics, 1992.

Riven, Eugene I. Mechanical Design of Robots. New York: McGraw-Hill, 1988.

"Robot Programming Tool Creates Specialist Software," Industrial Robot. 21(1): 40 (1994).

Rosenberg, Louis B. How to Assess the Quality of Force-Feedback Systems. Company Brocedure. Santa Clara, CA: Immersion Corp, 1994.

Salcudean, S. E. and others. "A Six Degree-of-Freedom, Hydraulic, One Person Motion Simulator," Proceedings of the IEEE International Conference on Robotics and Automation. 2437-43. IEEE Computer Society Press, 1994.

Sepehri, N and others. "Resolved-Mode Teleoperated Control of Heavy-Duty Hydraulic Machines," Transactions of the ASME Journal of Dynamic Systems, Measurement, and Control. 116: 232-240 (June 1994).

Seraji, H., M. Long and T.S. Lee. "Motion Control of 7-DOF Arms: The Configuration Control Approach," IEEE Transactions on Robotics and Automation. 9(2): 125-39 (April 1993).

Schimmels, Joseph M. and Michael A. Peshkin. "Admittance Matrix Design for Force Guided Assembly," IEEE Transactions on Robotics and Automation. 8(2): 213-227 (April 1992).

Schimmels, Joseph M. and Michael A. Peshkin. "Force Assembly with Friction," IEEE Transactions on Robotics and Automation. 10(4): 465-79 (August 1994).

Shaker, Steven M. and Alan R. Wise. War without Men: Robots on the Future Battlefield. Washington: Pergamon-Brassey's International Defense Publishers, Inc., 1988.

Sheridan, T. B. Telerobotics, automation, and human supervisory control. Cambridge: MIT Press, 1991.

Siciliano, B. "Kinematic Control of Redundant Robot Manipulators: A Tutorial," Journal of Intelligent and Robotic Systems. 3: 201-212 (1990).

Smith, F. M. and others. "Miniature High Performance Servovalves," Presented to the International Fluid Power Exposition and Technical Conference, Chicago, IL. March 24-26, 1992.

Smith, F. M. and others. "Telerobotic Manipulator for Hazardous Environments," Journal of Robotic Systems. 9(2): 251-260 (March 1992).

Spong, Mark W. and M. Vidyasagar. Robot Dynamics and Control. New York: John Wiley & Sons, 1989.

Stein, Matthew R and Richard P. Paul. "Operator Interaction for Time-Delayed Teleoperation with a Behavior-Based Controller," Proceedings of the IEEE International Conference on Robotics and Automation. 231-36. IEEE Computer Society Press, 1994.

Strenn, Stephen and others. "Collision Avoidance Algorithm for Telerobotics Applications," Proceedings of the IEEE International Conference on Robotics and Automation. 359-65. IEEE Computer Society Press, 1994.

TITAN II: Telerobotic Manipulator System. Product Specification Sheet. Davis CA: Schilling Development, 1992.

TITAN 7F and GAMMA 7F: Remote Manipulator Systems. Product Specification Sheet. Davis CA: Schilling Development, 1992.

Toffler, Alvin and Heidi Toffler. War and Anti-War: Survival at the Dawn of the 21st Century. Boston: Little Brown and Co., 1993.

Tsao, Tsu-Chin and Masayoshi Tomizuka. "Robust Adaptive and Repetitive Digital Tracking Control and Application to a Hydraulic Servo for Noncircular Machining," Transactions of the ASME Journal of Dynamic Systems, Measurement, and Control. 116(1): 24-32 (March 1994).

Tso, Kam Sing and Backes, Paul G. "Fail-Safe Tele-Autonomous Robotic System for Nuclear Facilities," Robotics and Computer-Integrated Manufacturing. 10: 423-8 (Dec 1993).

University of Utah Center for Engineering Design. Robotics Applications to Munitions Operations. Final Report, February 1994.

Unmanned Ground Vehicle/System Joint Project Office. Unmanned Ground Vehicle Master Plan, July 1994.

US Department of Labor, Bureau of Statistics. Employment and Wages Annual Averages, 1990. November 1991, Bulletin 2393.

Volpe, Richard and Pradeep Khosla. "A Theoretical and Experimental Investigation of Impact Control for Manipulators," International Journal of Robotic Research. 12(4): 351-65 (August 1993).

Warzawski, Abraham and Dwight A. Sangrey. "Robotics in Building Construction," Journal of Construction Engineering and Management. 3(3): 260-279 (Sept 1985).

Warden, John A. III. The Air Campaign: Planning for Combat. Washington, DC: Pergamon Brassey's, 1989.

"Weak Growth Forecast for Automated Material Handling in Near Future, but Long Term Prospects Look Brighter," Industrial Robot 21(4): 7-8 (1994).

Weiczer, Ferenc. Applying a New Wheel to Steering and Locomotion of Mobile Robots. Internal Report, Chalmers University of Technology, Gothenburg Sweden, 1993.

Wilfinger, L. S., John Wen and Steve Murphy. "Integral Force Control with Robustness Enhancement," Proceedings of the IEEE International Conference on Robotics and Automation. 1: 100-05. IEEE Computer Society Press, 1993.

Wilker, Steven. "The human/robot interface," Aerospace American. 31(10): 30-33 (October 1993).

Wing, Robert, D. "Recent Japanese Progress in Construction Robotics," Industrial Robot. 20(4): 32-34 (1993).

Wittenberg, Gunter. "A Virtual Reality and Simulation Initiative," Industrial Robot. 20(4): 14-16 (1993).

Xu, Yangming, John M. Hollerbach and Donghai Ma. "Force and Contact Transient Control using Nonlinear PD Control," Proceedings of the IEEE International Conference on Robotics and Automation. 924-30. IEEE Computer Society Press, 1994.

Yokokohji, Yasuyoshi. "Operation Modes for Cooperating with Autonomous Functions in Intelligent Teleoperation Systems," Proceedings of the IEEE International Conference on Robotics and Automation. 3: 510-15. IEEE Computer Society Press, 1993.

Youcef-Toumi, K. and D.A. Gutz. "Impact and Force Control: Modeling and Experiments," Transactions of the ASME Journal of Dynamic Systems, Measurement, and Control. 116(1): 89-98 (March 1994).

Vita

Neil Hamill

Major Hamill received his commission in the United States Army from the United States Military Academy in 1981. He received a Bachelor of Science degree from the academy. His most recent tour was the United States Missile Command at Redstone Arsenal in a variety of positions. In 1990-1991 he served in the Unmanned Aerial Vehicle Joint Project Office as a test officer. In 1991-1992 he served as the Executive Officer to the Deputy Commanding General of the United States Missile Command. From 1992-1994 he served as a test officer and Chief of the Product Assurance, Test and Configuration Management Division of the Unmanned Ground Vehicle Joint Project Office. He will be assigned to the TRADOC Systems Managers office at Fort Sill Oklahoma working on advanced field artillery systems.

Permanent Mailing Address:

202 Airport Thruway
Columbus, GA 31904

Michael B. Leahy Jr.

Major Leahy received his commission in the United States Air Force through the Reserve Officer Training Corps in 1980. His first tour was as an instrumentation engineer on the Airborne Laser Laboratory program. During this tour he completed his Masters Degree in Electrical Engineering at the University of New Mexico and was selected by the senior command sponsored education program to attend Rensselaer Polytechnic Institute. After earning his Doctorate he was assigned to the Electrical and Computer Engineering Department at the Air Force Institute of Technology. In this tour he was promoted to Associate Professor in 1990 and was selected as the Gage H. Crocker Outstanding Professor. His most recent tour was at SA-ALC as the director of the AFMC Robotics and Automation Center of Excellence. In 1993 he received the General James Ferguson award as the outstanding engineer in AFMC. He has over 45 technical publications to his credit and is the founding editor of the IEEE Robotics and Automation Magazine.

Major Leahy has been involved with the Next Generation Munitions Handler program since it's inception. He plans on continuing that involvement as part of his responsibilities in his next assignment as a Technology Integration manager in the AFMC/ST headquarters.

Permanent Mailing Address:

166 Greenmanor Rd
Enfield, CT 06082