INSTALLATION RESTORATION PROGRAM

# SITE INVESTIGATION REPORT

## VOLUME II

FINAL

## ALABAMA AIR NATIONAL GUARD
### 187th FIGHTER GROUP

DANNELLY FIELD MUNICIPAL AIRPORT
MONTGOMERY, ALABAMA

NOVEMBER 1995

DISTRIBUTION STATEMENT A
Approved for public release;
Distribution Unlimited

19960821 111

**Hazardous Waste Remedial Actions Program**
**Environmental Restoration and Waste Management Programs**
Oak Ridge, Tennessee 37831-7606
Managed by MARTIN MARIETTA ENERGY SYSTEMS, INC.
For the U.S. DEPARTMENT OF ENERGY under contract
DE-AC05-84OR21400

QUALITY INSPECTED

# DISCLAIMER NOTICE

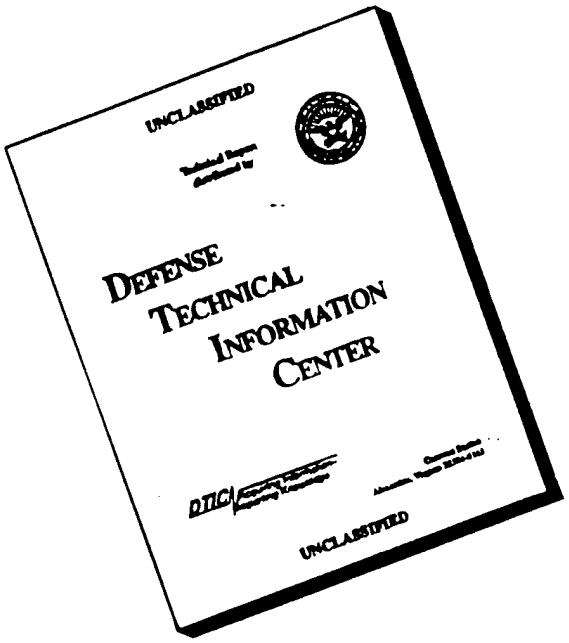


THIS DOCUMENT IS BEST QUALITY AVAILABLE. THE COPY FURNISHED TO DTIC CONTAINED A SIGNIFICANT NUMBER OF PAGES WHICH DO NOT REPRODUCE LEGIBLY.

# REPORT DOCUMENTATION PAGE

Form Approved
OMB No. 0704-0188

Public reporting burden for this collection of information is estimated to average 1 hour per response, including the time for reviewing instructions, searching existing data sources, gathering and maintaining the data needed, and completing and reviewing the collection of information. Send comments regarding this burden estimate or any other aspect of this collection of information, including suggestions for reducing this burden, to Washington Headquarters Services, Directorate for Information Operations and Reports, 1215 Jefferson Davis Highway, Suite 1204, Arlington, VA 22202-4302, and to the Office of Management and Budget, Paperwork Reduction Project (0704-0188), Washington, DC 20503

**1. AGENCY USE ONLY** *(Leave blank)*

**2. REPORT DATE**
November 1995

**3. REPORT TYPE AND DATES COVERED**
Site Investigation Report

**4. TITLE AND SUBTITLE**
Site Investigation Report, Alabama Air National Guard, 187th Fighter Group, Dannelly Field Municipal Airport, Montgomery, Alabama - Volume II

**5. FUNDING NUMBERS**

**6. AUTHOR(S)**
NA

**7. PERFORMING ORGANIZATION NAME(S) AND ADDRESS(ES)**
CH2M Hill
2567 Fairlane Drive
Montgomery, AL 36116-1622

**8. PERFORMING ORGANIZATION REPORT NUMBER**

**9. SPONSORING / MONITORING AGENCY NAME(S) AND ADDRESS(ES)**
ANG/CEVR
3500 Fetchet Avenue
Andrews AFB MD 20762-5157

**10. SPONSORING / MONITORING AGENCY REPORT NUMBER**

**11. SUPPLEMENTARY NOTES**

**12a. DISTRIBUTION / AVAILABILITY STATEMENT**
Approved for public release;
distribution is unlimited

**12b. DISTRIBUTION CODE**

**13. ABSTRACT** *(Maximum 200 words)*

Site Investigation Report, Alabama Air National Guard, 187th Fighter Group, Dannelly Field Municipal Airport, Montgomery, Alabama, Volume I - Appendices. This is the second volume of a two volume site investigation report. Three sites (Site 1 - POL Facility, Site 2 - Oil/Water Separator (OWS) and Tank, and Site 4 - Edge of Aircraft Parking Apron) were investigated under the Installation Restoration Program. Soil and groundwater samples were collected and analyzed. No further action was recommended for any of the three sites under current land use.

DTIC QUALITY INSPECTED 1

**14. SUBJECT TERMS**
Installation Restoration Program; Comprehensive Environmental Response, Compensation and Liability Act (CERCLA); Air National Guard; Site Investigation Alabama Air National Guard; Montgomery, Alabama

**15. NUMBER OF PAGES**
250

**16. PRICE CODE**

**17. SECURITY CLASSIFICATION OF REPORT**
UNCLASSIFIED

**18. SECURITY CLASSIFICATION OF THIS PAGE**
UNCLASSIFIED

**19. SECURITY CLASSIFICATION OF ABSTRACT**
UNCLASSIFIED

**20. LIMITATION OF ABSTRACT**
NONE

## GENERAL INSTRUCTIONS FOR COMPLETING SF 298

The Report Documentation Page (RDP) is used in announcing and cataloging reports. It is important that this information be consistent with the rest of the report, particularly the cover and title page. Instructions for filling in each block of the form follow. It is important to ***stay within the lines*** to meet ***optical scanning requirements***.

**Block 1.** Agency Use Only *(Leave blank)*.

**Block 2.** Report Date. Full publication date including day, month, and year, if available (e.g. 1 Jan 88). Must cite at least the year.

**Block 3.** Type of Report and Dates Covered. State whether report is interim, final, etc. If applicable, enter inclusive report dates (e.g. 10 Jun 87 - 30 Jun 88).

**Block 4.** Title and Subtitle. A title is taken from the part of the report that provides the most meaningful and complete information. When a report is prepared in more than one volume, repeat the primary title, add volume number, and include subtitle for the specific volume. On classified documents enter the title classification in parentheses.

**Block 5.** Funding Numbers. To include contract and grant numbers; may include program element number(s), project number(s), task number(s), and work unit number(s). Use the following labels:

| | | | |
|---|---|---|---|
| **C** | - Contract | **PR** | - Project |
| **G** | - Grant | **TA** | - Task |
| **PE** | - Program Element | **WU** | - Work Unit Accession No. |

**Block 6.** Author(s). Name(s) of person(s) responsible for writing the report, performing the research, or credited with the content of the report. If editor or compiler, this should follow the name(s).

**Block 7.** Performing Organization Name(s) and Address(es). Self-explanatory.

**Block 8.** Performing Organization Report Number. Enter the unique alphanumeric report number(s) assigned by the organization performing the report.

**Block 9.** Sponsoring/Monitoring Agency Name(s) and Address(es). Self-explanatory.

**Block 10.** Sponsoring/Monitoring Agency Report Number. *(If known)*

**Block 11.** Supplementary Notes. Enter information not included elsewhere such as: Prepared in cooperation with...; Trans. of...; To be published in.... When a report is revised, include a statement whether the new report supersedes or supplements the older report.

**Block 12a.** Distribution/Availability Statement. Denotes public availability or limitations. Cite any availability to the public. Enter additional limitations or special markings in all capitals (e.g. NOFORN, REL, ITAR).

- **DOD** - See DoDD 5230.24, "Distribution Statements on Technical Documents."
- **DOE** - See authorities.
- **NASA** - See Handbook NHB 2200.2.
- **NTIS** - Leave blank.

**Block 12b.** Distribution Code.

- **DOD** - Leave blank.
- **DOE** - Enter DOE distribution categories from the Standard Distribution for Unclassified Scientific and Technical Reports.
- **NASA** - Leave blank.
- **NTIS** - Leave blank.

**Block 13.** Abstract. Include a brief *(Maximum 200 words)* factual summary of the most significant information contained in the report.

**Block 14.** Subject Terms. Keywords or phrases identifying major subjects in the report.

**Block 15.** Number of Pages. Enter the total number of pages.

**Block 16.** Price Code. Enter appropriate price code *(NTIS only)*.

**Blocks 17. - 19.** Security Classifications. Self-explanatory. Enter U.S. Security Classification in accordance with U.S. Security Regulations (i.e., UNCLASSIFIED). If form contains classified information, stamp classification on the top and bottom of the page.

**Block 20.** Limitation of Abstract. This block must be completed to assign a limitation to the abstract. Enter either UL (unlimited) or SAR (same as report). An entry in this block is necessary if the abstract is to be limited. If blank, the abstract is assumed to be unlimited.

Appendix A

# SOIL GAS/GROUNDWATER SURVEY RESULTS

# SOIL GAS AND GROUND WATER SURVEY

# ALABAMA AIR NATIONAL GUARD

# MONTGOMERY, ALABAMA

TARGET ENVIRONMENTAL SERVICES, INC.

# SOIL GAS AND GROUND WATER SURVEY

# ALABAMA AIR NATIONAL GUARD

# DANNELLY FIELD

# POL FACILITY

# MONTGOMERY, ALABAMA

PREPARED FOR

**CH2M HILL**

2567 FAIRLANE DRIVE

MONTGOMERY, ALABAMA 36116

PREPARED BY

**TARGET ENVIRONMENTAL SERVICES, INC.**

9180 RUMSEY ROAD

COLUMBIA, MARYLAND 21045

(301) 992-6622

MARCH 1991

## EXECUTIVE SUMMARY

On February 19-21, 1991, **TARGET** Environmental Services, Inc. (**TARGET**) conducted a soil gas and ground water survey at Alabama Air National Guard Dannelly Field Petroleum, Oil and Lubricant (POL) Facility in Montgomery, Alabama, where underground storage tanks containing JP-4 may have leaked and minor fuel spillage has been reported. Soil gas and ground water headspace samples were analyzed by GC/FID for petroleum hydrocarbons and by GC/ECD for the chlorinated hydrocarbons, trichloroethene (TCE) and tetrachloroethene (PCE).

Elevated levels of Total Volatiles were present in all soil gas and ground water samples. Toluene, ethylbenzene and the xylene isomers were present in all ground water and most soil gas samples. Benzene was the most restricted of the standardized petroleum analytes, particularly in the soil gas phase. The chlorinated hydrocarbons, PCE and TCE, were not present above their detection limit in any of the soil gas or ground water samples collected from the POL facility.

## Introduction

CH2M HILL contracted Target Environmental Services, Inc. (TARGET) to conduct a soil gas and ground water survey at the Petroleum, Oil and Lubricant (POL) Facility, Alabama Air National Guard Dannelly Field, Montgomery, Alabama, as part of a site investigation. There is evidence of past leakage from JP-4 underground storage tanks and minor JP-4 spillage has been reported. The purpose of the survey is to aid in the placement of soil borings and monitoring wells. The field phase of the soil gas survey was conducted on February 19-21, 1991.

## Detectability

The soil gas survey data presented in this report are the result of precise sampling and measurement of contaminant concentrations in the vadose zone. Analyte detection at a particular location is representative of vapor, dissolved, and/or liquid phase contamination at that location. The presence of detectable levels of target analytes in the vadose zone is dependent upon several factors, including the presence of vapor-phase hydrocarbons or dissolved or liquid concentrations adequate to facilitate volatilization into the unsaturated zone.

## Terminology

In order to prevent misunderstanding of certain terms used in this report, the following clarifications are offered:

The term "feature" is used in reference to a discernible pattern in the contoured data. It denotes a contour form rather than a definite or separate chemical occurrence.

The term "occurrence" is used to indicate an area where chemical compounds are present in sufficient concentrations to be detected by the analysis of soil vapors. The term is not indicative of any specific mode of occurrence (vapor, dissolved, etc.), and does not necessarily indicate or suggest the presence of "free product" or "phase-separated hydrocarbons."

The term "anomaly" refers to an area where hydrocarbons were measured in excess of what would normally be considered "natural" or "background" levels.

The term "analyte" refers to any of the hydrocarbons standardized for quantification in the chromatographic analysis.

The term "vadose zone" represents the unsaturated zone between the ground water table and the ground surface.

The term "indicates" is used when evidence dictates a unique conclusion. The term "suggests" is used when several explanations of certain evidence are possible, but one in particular seems more likely. As a result, "indicates" carries a higher degree of confidence in a conclusion than does "suggests."

## Field Procedures

Ground water samples were collected at a total of 10 locations at the site, as shown in Figure 1A. To collect the samples a slide hammer was used to advance connected 3' sections of 1" diameter threaded steel casing down to a depth of 6'. Sample 27-W was collected at a depth of 5'. Water was allowed to fill the pipe. A stainless steel bailer was used to collect the water samples. Samples were placed in amber glass vials, sealed, labeled and taken to the mobile laboratory.

A field control sample of water was collected at the beginning of each day's field activities and after the fourth and eighth samples on the second day. This QA/QC sample was obtained using distilled water.

Soil gas samples were collected at a total of 12 locations at the site, as shown in Figure 1B. To collect the samples, a van-mounted hydraulic probe was used to advance connected 3' sections of 1" diameter threaded steel casing down to a depth of 15'. The entire sampling system was purged with ambient air drawn through an organic vapor filter cartridge. A teflon line was inserted into the casing to the bottom of the hole, and the bottom-hole line perforations were isolated from the up-hole annulus by an inflatable packer. A sample of in-situ soil gas was then withdrawn through the probe and used to purge atmospheric air from the sampling system. A second sample of soil gas was withdrawn through the probe and encapsulated in a pre-evacuated glass vial at two atmospheres of pressure (15 psig). The self-sealing vial was detached from the sampling system, packaged, labeled, and taken to

the mobile laboratory for analysis.

Field control samples of soil gas were collected at the beginning and end of each day's field activities. These QA/QC samples were obtained by drawing ambient air through a dust and organic vapor filter cartridge and collecting in the same manner as described above.

Prior to the day's field activities all sampling equipment, slide hammer rods, steel casing and bailers were decontaminated by washing with soapy water and rinsing thoroughly. Internal surfaces were flushed dry using pre-purified nitrogen or filtered ambient air, and external surfaces were wiped clean using clean paper towels.

## Laboratory Procedures

All analyses were performed on site in TARGET's climate controlled mobile laboratory.

Headspaces of ground water and aqueous standards were prepared by pipetting equal volumes of liquid from the sample containers. Sample containers were placed in a heating block at 75-80°C for 5 minutes prior to injection of a vapor sample from the headspace of the sample container.

All of the soil gas and ground water headspace samples collected during the field phase of the survey were subjected to dual analyses. One analysis was conducted according to EPA Method 601 (modified) on a gas chromatograph equipped with an electron capture detector (ECD), but using direct injection instead of purge and trap. Specific analytes standardized for this analysis were:

trichloroethene (TCE)
tetrachloroethene (PCE)

The chlorinated hydrocarbons were chosen because of their common usage in industrial solvents.

The second analysis was conducted according to EPA Method 602 (modified) on a gas chromatograph equipped with a flame ionization detector (FID), but using direct injection instead of purge and trap. The analytes selected for standardization in this analysis were:

benzene
toluene
ethylbenzene
meta- and para- xylene
ortho-xylene

These compounds were chosen because of their utility in evaluating the presence of fuel products, or petroleum based solvents.

The FID Total Volatiles values were generated by summing the areas of all chromatogram peaks and calculated using the instrument response factor for toluene. Injection peaks, which also contain the light hydrocarbon methane, were excluded to avoid the skewing of the Total Volatiles (Totals) values due to injection disturbances and biogenic methane. For samples with low hydrocarbon concentrations, the calculated Total Volatiles concentration is occasionally lower than the sum of the individual analytes. This is because the response factor used for the Total Volatiles calculation is a constant, whereas the individual analyte response factors vary with concentration. It is important to understand that the Total Volatiles levels reported are relative, not absolute, values.

Separate standard curves were used for soil gas and ground water headspace. The analytical equipment was calibrated using an instrument-response curve and injection of known concentrations of the above standards. Retention times of the standards were used to identify the peaks in the chromatograms of the field samples and their response factors were used to calculate the analyte concentrations. The tabulated results of the laboratory analyses of the soil gas and ground water headspace samples are reported in parts per billion volume to volume (ppb v/v) in Tables 1 and 2.

Map sample points with no data shown indicate that the analyte concentrations in the sample were below the detection limit.

For QA/QC purposes, a duplicate analysis was performed on every tenth field sample. Laboratory blanks of nitrogen gas (99.999%) were also analyzed after the tenth soil gas sample, while

a laboratory blank of distilled water was analyzed after the tenth ground water headspace sample.

## Discussion and Interpretation of Results

In order to provide graphic presentation of the results, ground water data sets in Table 1 have been mapped and contoured to produce Figures 2 through 6. Soil gas data sets in Table 2 have been mapped in Figures 7-12. Soil gas data were not contourable.

Analysis of the ground water via headspace indicated elevated levels of Total Volatile hydrocarbons (Figure 2) in all ground water samples. Benzene and toluene concentrations (Figures 3 and 4) were highest in the northern portion of the POL. Benzene was not present in the ground water above the reported detection limit in samples from the southeastern portion of the POL, while toluene concentrations were relatively low in this area. Ethylbenzene (not mapped), m- and p-xylene (Figure 5) and o-xylene (Figure 6) concentrations were highest in samples collected in the southeastern portion of the site (Stations 23-W and 26-W). GC/ECD analysis of the ground water headspace samples indicated that tetrachloroethene (PCE) and trichloroethene (TCE) were not present above their respective detection limits in any of the samples.

GC/FID analysis of soil gas samples from the periphery of the POL facility revealed elevated levels of Total Volatiles in all soil gas samples. The highest concentration occurred on the eastern side of the facility north of the building (Station 20). Benzene (Figure 8), the most restricted of the standardized analytes, was present at only two locations on the northeastern side of the facility (Stations 18 and 19). The toluene concentration was highest on the western side of the facility at Station 15, with lower levels in some other samples on the western and

northeastern sides. Ethylbenzene, m- and p-xylene and o-xylene levels (Figures 10-12) were relatively high on the eastern side of the facility at Station 20. A relatively high level of m- and p-xylene also occurred on the western side at Station 14. Elevated concentrations of ethylbenzene and m- and p-xylene were observed at many of the remaining sampling locations, while o-xylene was quite restricted in its occurrence. GC/ECD analysis of the soil gas samples indicated that PCE and TCE were not present above their respective detection limits in any of the soil gas samples.

Elevated levels of Total Volatiles were present in all soil gas and ground water samples. Toluene, ethylbenzene and the xylene isomers were present in all ground water and most soil gas samples. Benzene was the most restricted of the standardized petroleum analytes, particularly in the soil gas samples. The chlorinated hydrocarbons, PCE and TCE, were not present above their detection limits in any of the soil gas or ground water samples collected from the POL facility.

## TABLE 1

***ANALYTE CONCENTRATIONS IN GROUND WATER VIA HEADSPACE ANALYSIS**
**CONCENTRATIONS IN PARTS PER BILLION (V/V)**

| SAMPLE | BENZENE | TOLUENE | ETHYL-BENZENE | m- & p-XYLENE | o-XYLENE | TOTAL VOLATILES[1] | TCE | PCE |
|---|---|---|---|---|---|---|---|---|
| 23-W | <11 | 556 | 20,100 | 29,290 | 12,930 | 361,600 | <7.0 | <6.0 |
| 24-W | <11 | 384 | 4,963 | 4,629 | 2,963 | 73,000 | <7.0 | <6.0 |
| 25-W | 153 | 524 | 14,460 | 14,240 | 4,466 | 366,900 | <7.0 | <6.0 |
| 26-W | <11 | 723 | 25,290 | 24,920 | 12,060 | 522,200 | <7.0 | <6.0 |
| 27-W | <11 | 703 | 6,905 | 7,028 | 3,612 | 231,600 | <7.0 | <6.0 |
| 28-W | 110 | 3,401 | 11,530 | 12,160 | 6,017 | 270,400 | <7.0 | <6.0 |
| 29-W | 25,810 | 10,780 | 17,230 | 17,150 | 7,763 | 478,000 | <7.0 | <6.0 |
| 30-W | 16,670 | 5,956 | 10,670 | 5,374 | 5,606 | 308,900 | <7.0 | <6.0 |
| 31-W | 13,880 | 129 | 7,048 | 6,267 | 2,163 | 164,400 | <7.0 | <6.0 |
| 32-W | 63 | 105 | 1,576 | 1,840 | 1,057 | 35,450 | <7.0 | <6.0 |

* BTEX WERE ANALYZED VIA GC/FID AND HALOCARBONS WERE ANALYZED VIA GC/ECD.

TCE = TRICHLOROETHENE
PCE = TETRACHLOROETHENE

[1]CALCULATED USING THE SUM OF THE AREAS OF ALL INTEGRATED CHROMATOGRAM PEAKS AND THE INSTRUMENT RESPONSE FACTOR FOR TOLUENE

## TABLE 1 (cont)

***ANALYTE CONCENTRATIONS IN GROUND WATER VIA HEADSPACE ANALYSIS**
**CONCENTRATIONS IN PARTS PER BILLION (V/V)**

| SAMPLE | BENZENE | TOLUENE | ETHYL-BENZENE | m- & p-XYLENE | o-XYLENE | TOTAL VOLATILES[1] | TCE | PCE |
|---|---|---|---|---|---|---|---|---|
| **FIELD CONTROL SAMPLES** | | | | | | | | |
| 1-W | <11 | <11 | <11 | <11 | <11 | <11 | <7.0 | <6.0 |
| 2-W | <11 | <11 | <11 | <11 | <11 | 1,636 | <7.0 | <6.0 |
| 3-W | 13 | 11 | 16 | 26 | 24 | 2,132 | <7.0 | <6.0 |
| 4-W | <11 | <11 | <11 | 15 | 15 | 131 | <7.0 | <6.0 |
| 5-W | <11 | <11 | <11 | <11 | <11 | 141 | <7.0 | <6.0 |
| **LABORATORY DUPLICATE ANALYSES** | | | | | | | | |
| 32-W | 61 | 105 | 1,576 | 1,840 | 1,057 | 35,450 | <7.0 | <6.0 |
| 32-WR | 39 | 114 | 1,974 | 2,188 | 1,099 | 46,630 | <7.0 | <6.0 |
| **LABORATORY BLANKS** | | | | | | | | |
| BMCHM-1 | <11 | <11 | <11 | 12 | 13 | 407 | <7.0 | <6.0 |

* BTEX WERE ANALYZED VIA GC/FID AND HALOCARBONS WERE ANALYZED VIA GC/ECD.

TCE = TRICHLOROETHENE
PCE = TETRACHLOROETHENE

[1]CALCULATED USING THE SUM OF THE AREAS OF ALL INTEGRATED CHROMATOGRAM PEAKS AND THE INSTRUMENT RESPONSE FACTOR FOR TOLUENE

## TABLE 2

*** LABORATORY RESULTS OF SOIL GAS SAMPLES**
**CONCENTRATIONS IN PARTS PER BILLION (V/V)**

| SAMPLE | BENZENE | TOLUENE | ETHYL-BENZENE | m- & p-XYLENE | o-XYLENE | TOTAL VOLATILES[1] | TCE | PCE |
|---|---|---|---|---|---|---|---|---|
| 11 | <287 | <243 | <211 | <211 | <211 | 2,803 | <17 | <6.8 |
| 12 | <287 | <243 | 211 | 570 | <211 | 33,440 | <17 | <6.8 |
| 13 | <287 | <243 | <211 | 359 | <211 | 22,320 | <17 | <6.8 |
| 14 | <287 | 316 | 781 | 2,110 | 696 | 75,940 | <17 | <6.8 |
| 15 | <287 | 3,645 | 338 | 844 | 359 | 80,030 | <17 | <6.8 |
| 16 | <287 | <243 | <211 | 359 | <211 | 7,333 | <17 | <6.8 |
| 17 | <287 | 292 | 253 | 1,287 | 232 | 41,300 | <17 | <6.8 |
| 18 | 488 | 340 | 317 | 1,456 | 274 | 63,940 | <17 | <6.8 |
| 19 | 545 | <243 | 317 | 1,245 | <211 | 47,060 | <17 | <6.8 |
| 20 | <287 | 292 | 1,561 | 3,587 | 1,625 | 141,600 | <17 | <6.8 |
| 21 | <287 | <243 | <211 | 401 | <211 | 12,000 | <17 | <6.8 |
| 22 | <287 | <243 | <211 | 422 | <211 | 14,390 | <17 | <6.8 |

* BTEX WERE ANALYZED VIA GC/FID AND HALOCARBONS WERE ANALYZED VIA GC/ECD.

TCE = TRICHLOROETHENE
PCE = TETRACHLOROETHENE

[1]CALCULATED USING THE SUM OF THE AREAS OF ALL INTEGRATED CHROMATOGRAM PEAKS AND THE INSTRUMENT RESPONSE FACTOR FOR TOLUENE

TABLE 2 (cont)

* LABORATORY RESULTS OF SOIL GAS SAMPLES
CONCENTRATIONS IN PARTS PER BILLION (V/V)

| SAMPLE | BENZENE | TOLUENE | ETHYL-BENZENE | m- & p-XYLENE | o-XYLENE | TOTAL VOLATILES[1] | TCE | PCE |
|---|---|---|---|---|---|---|---|---|
| **FIELD CONTROL SAMPLES** | | | | | | | | |
| 1 | <287 | <243 | <211 | <211 | <211 | <243 | <17 | <6.8 |
| 2 | <287 | <243 | <211 | <211 | <211 | <243 | <17 | <6.8 |
| 3 | <287 | <243 | <211 | <211 | <211 | <243 | <17 | <6.8 |
| 4 | <287 | <243 | <211 | <211 | <211 | <243 | <17 | <6.8 |
| **LABORATORY DUPLICATE ANALYSES** | | | | | | | | |
| 16 | <287 | <243 | <211 | 359 | <211 | 7,333 | <17 | <6.8 |
| 16R | <287 | <243 | 253 | 359 | <211 | 7,302 | <17 | <6.8 |
| **LABORATORY BLANKS** | | | | | | | | |
| BMCHM-1 | <287 | <243 | <211 | <211 | <211 | <243 | <17 | <6.8 |

* BTEX WERE ANALYZED VIA GC/FID AND HALOCARBONS WERE ANALYZED VIA GC/ECD.

TCE = TRICHLOROETHENE
PCE = TETRACHLOROETHENE

[1]CALCULATED USING THE SUM OF THE AREAS OF ALL INTEGRATED CHROMATOGRAM PEAKS AND THE INSTRUMENT RESPONSE FACTOR FOR TOLUENE

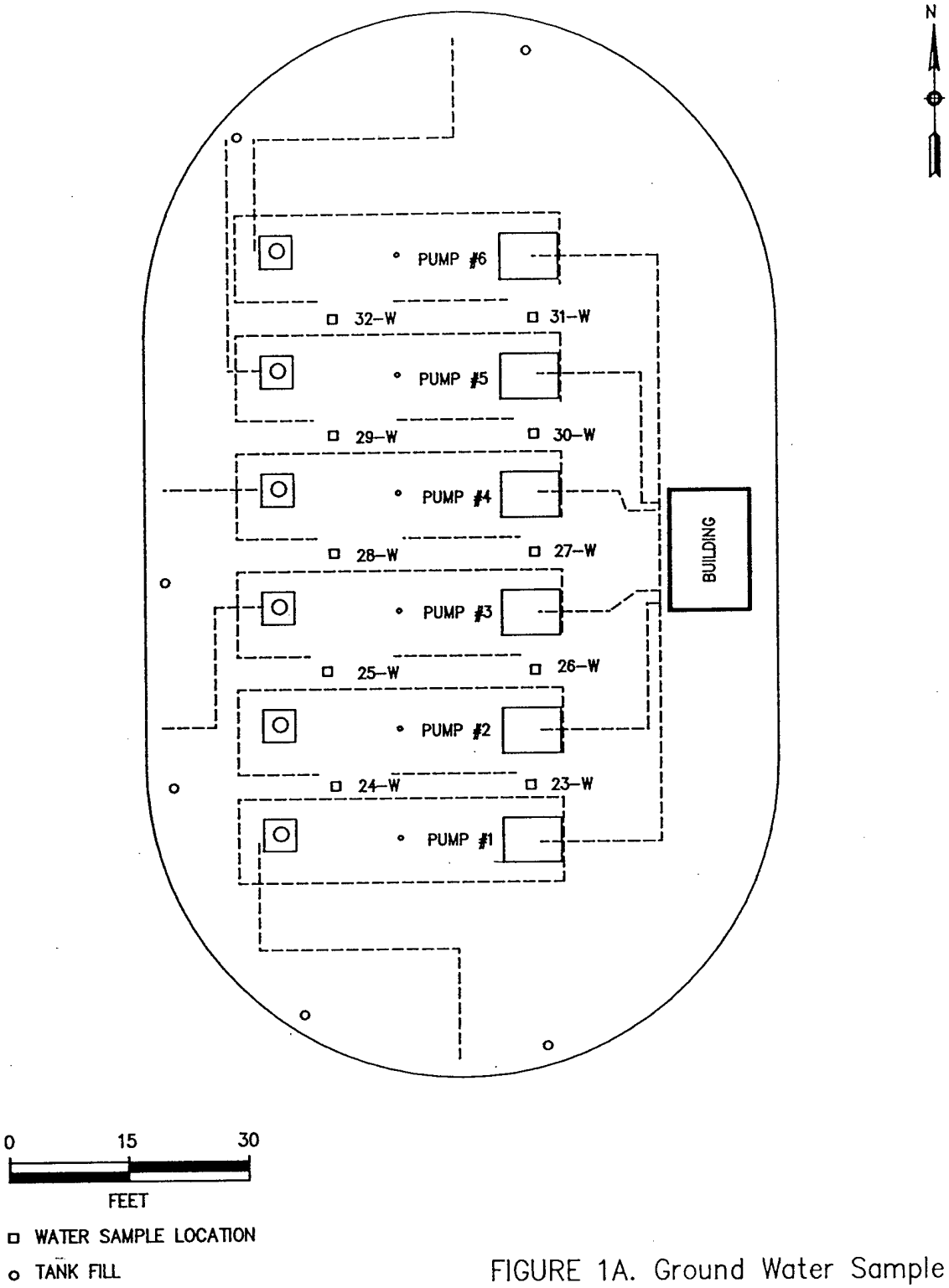


FIGURE 1A. Ground Water Sample Locations

TARGET ENVIRONMENTAL SERVICES, INC.

This map is integral to a written report and should be viewed in that context.

ALABAMA AIR NATIONAL GUARD
POL FACILITY
MONTGOMERY, ALABAMA

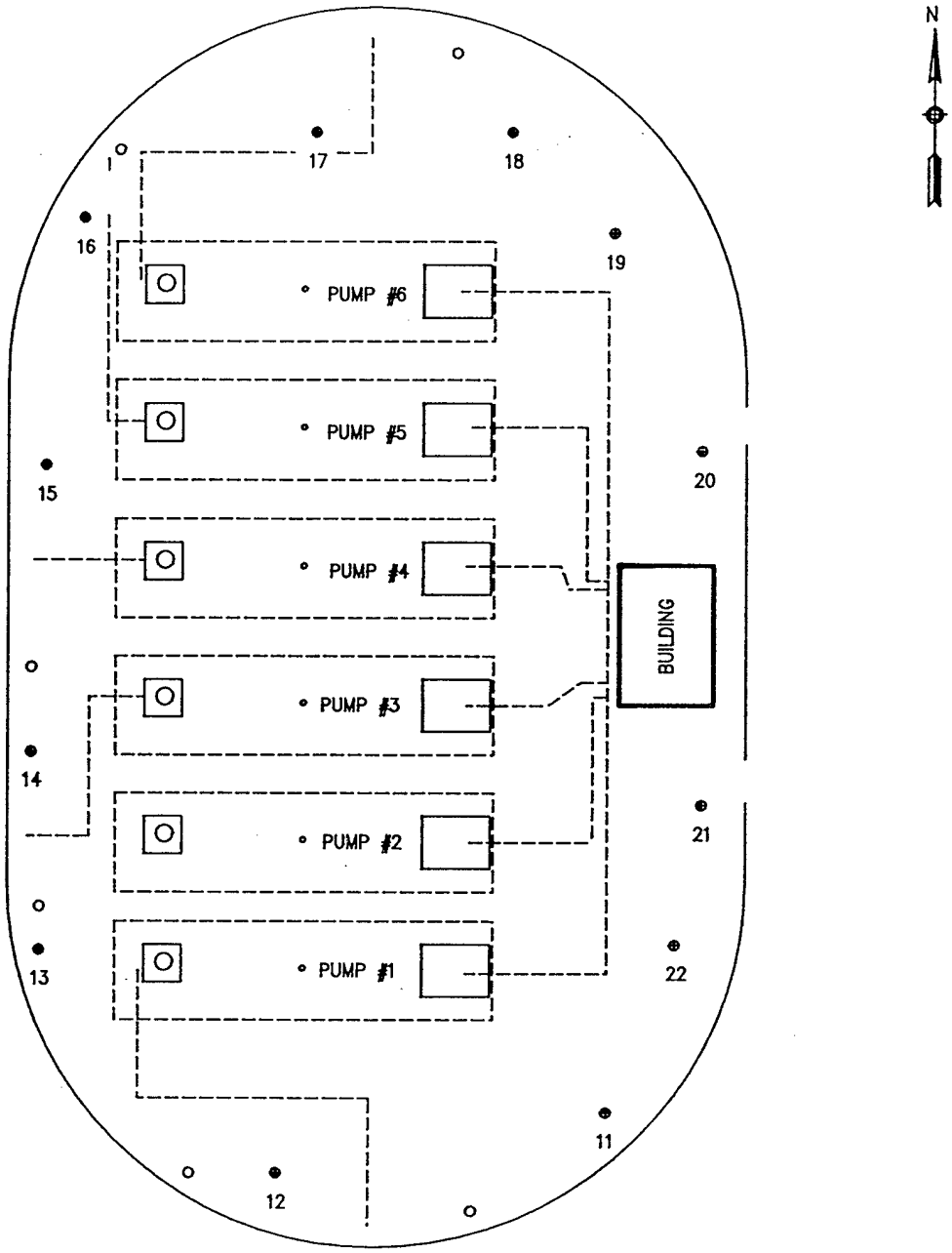


0 15 30

FEET

● SOIL GAS SAMPLE LOCATION

o TANK FILL

FIGURE 1B. Soil Gas Sample Locations

TARGET ENVIRONMENTAL SERVICES, INC.

This map is integral to a written report and should be viewed in that context.

ALABAMA AIR NATIONAL GUARD
POL FACILITY
MONTGOMERY, ALABAMA

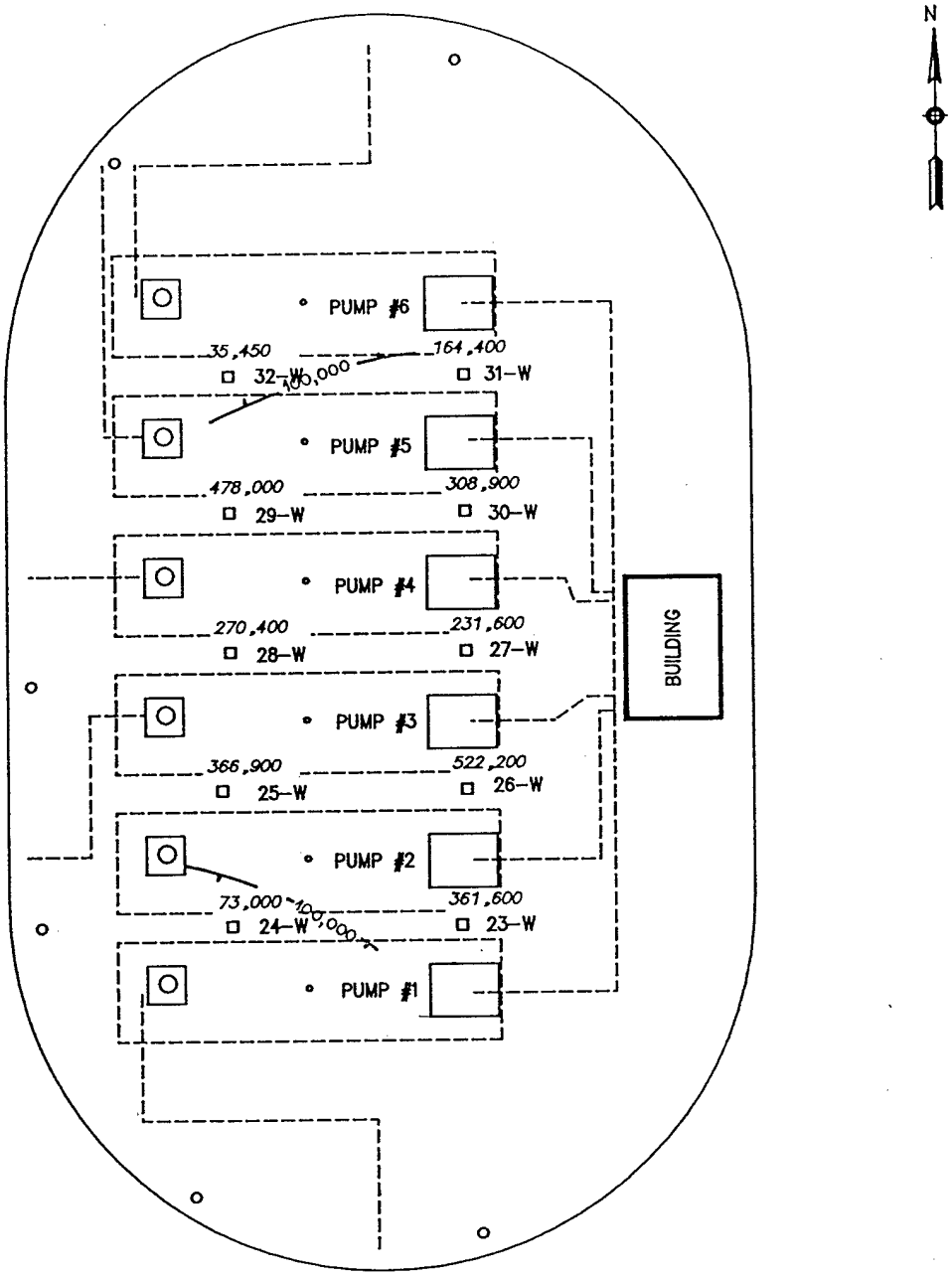


0 15 30

FEET

□ WATER SAMPLE LOCATION

o TANK FILL

TARGET ENVIRONMENTAL SERVICES, INC.

This map is integral to a written report and should be viewed in that context.

FIGURE 2. FID Total Volatiles in Ground Water (calc'd ppb v/v)

ALABAMA AIR NATIONAL GUARD
POL FACILITY
MONTGOMERY, ALABAMA

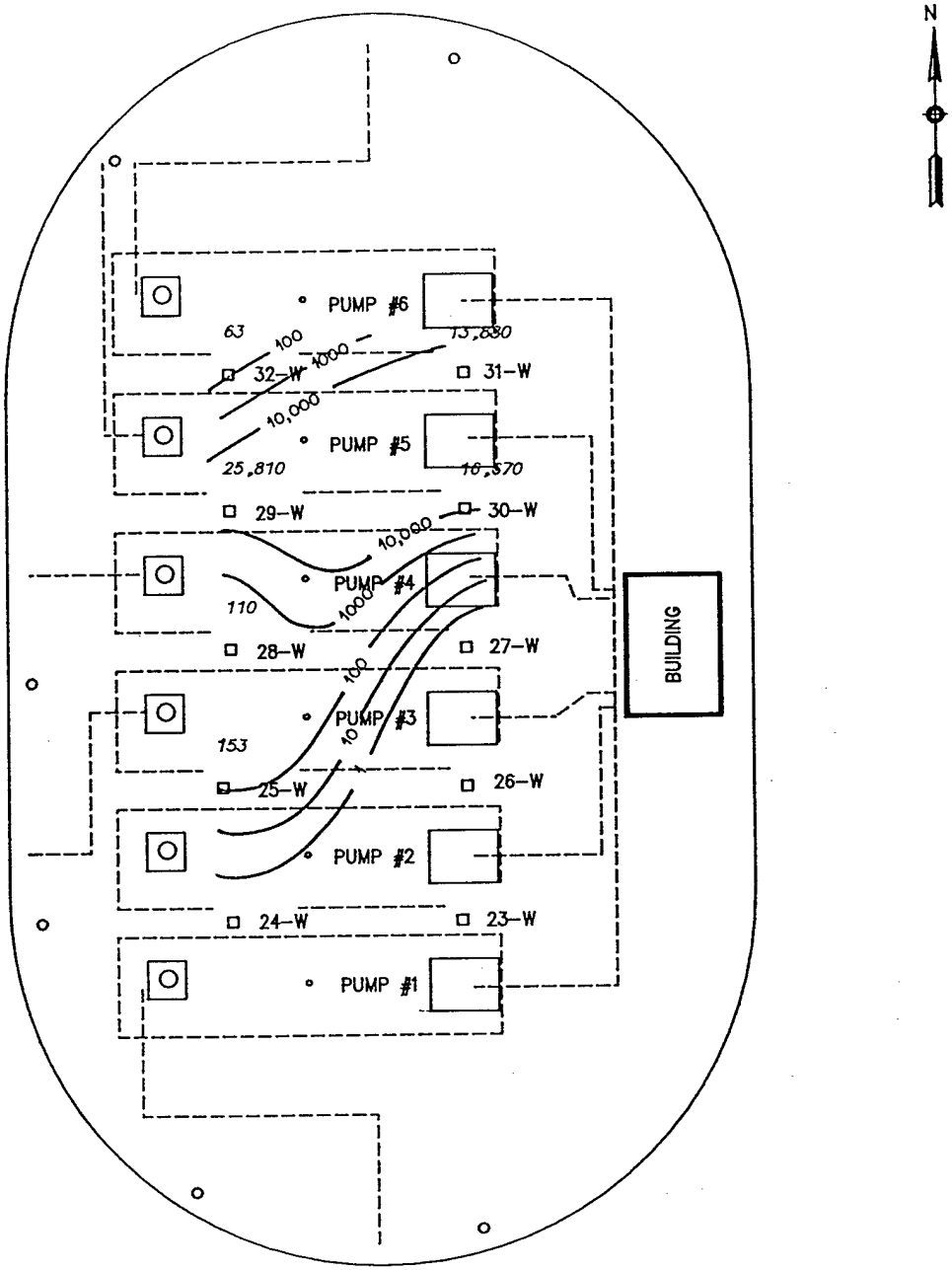


0 15 30

FEET

□ WATER SAMPLE LOCATION

o TANK FILL

FIGURE 3. Benzene in Ground Water (ppb v/v)

TARGET ENVIRONMENTAL SERVICES, INC.

This map is integral to a written report and should be viewed in that context.

ALABAMA AIR NATIONAL GUARD
POL FACILITY
MONTGOMERY, ALABAMA

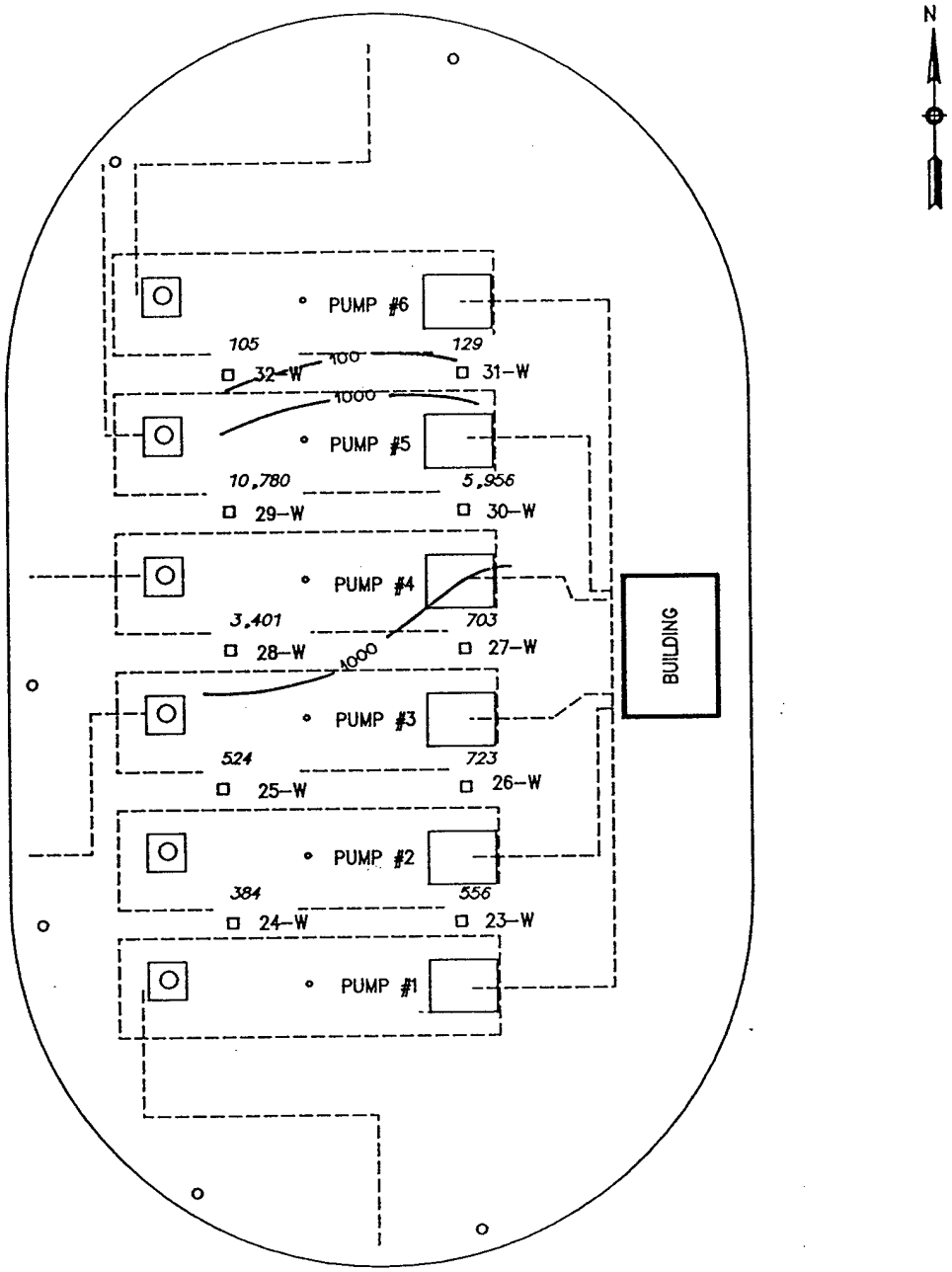


0 15 30

FEET

□ WATER SAMPLE LOCATION

o TANK FILL

FIGURE 4. Toluene in Ground Water (ppb v/v)

TARGET ENVIRONMENTAL SERVICES, INC.

This map is integral to a written report and should be viewed in that context.

ALABAMA AIR NATIONAL GUARD
POL FACILITY
MONTGOMERY, ALABAMA

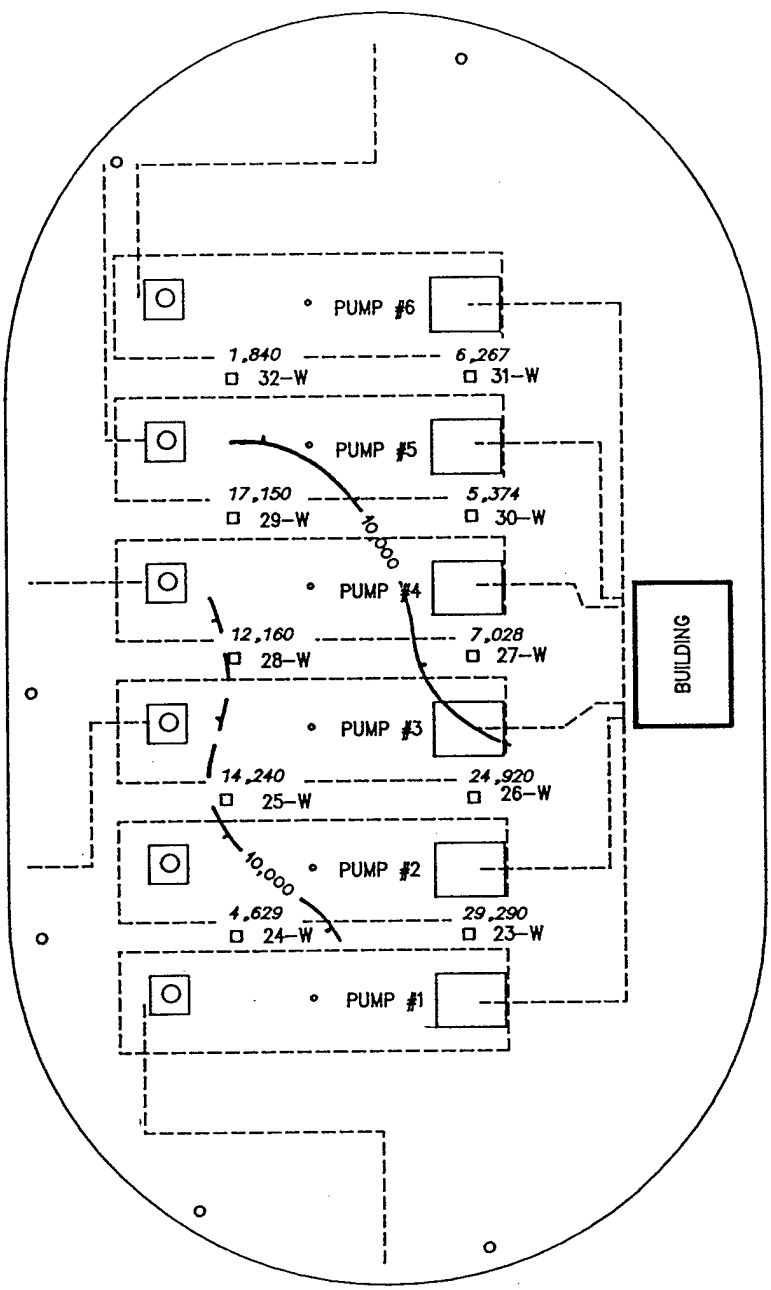


0 15 30

FEET

□ WATER SAMPLE LOCATION

○ TANK FILL

FIGURE 5. meta- and para-Xylene in Ground Water (ppb v/v)

TARGET ENVIRONMENTAL SERVICES, INC.

This map is integral to a written report and should be viewed in that context.

ALABAMA AIR NATIONAL GUARD
POL FACILITY
MONTGOMERY, ALABAMA

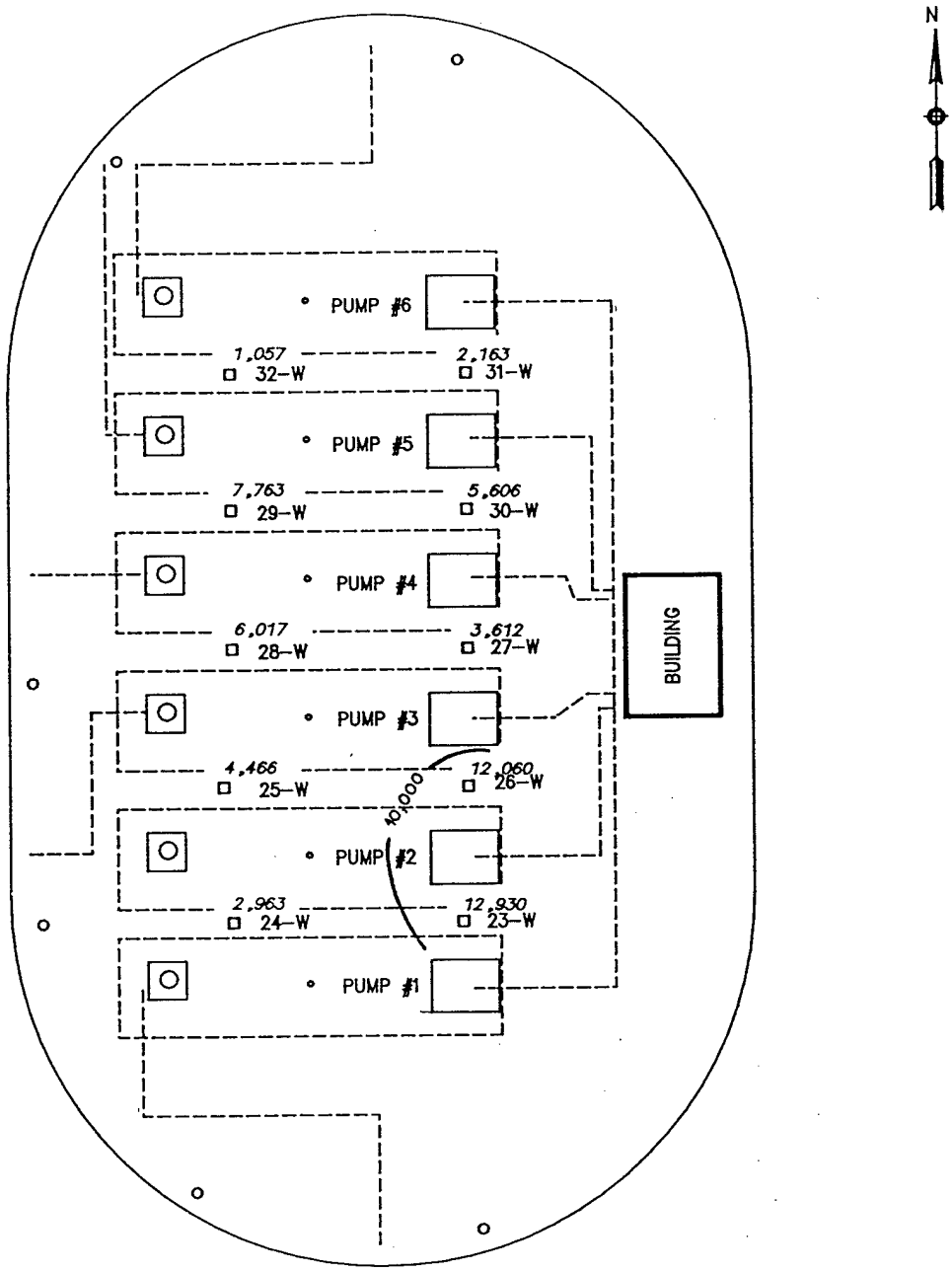


0 15 30

FEET

□ WATER SAMPLE LOCATION

○ TANK FILL

TARGET ENVIRONMENTAL SERVICES, INC.

This map is integral to a written report and should be viewed in that context.

FIGURE 6. ortho-Xylene in Ground Water (ppb v/v)

ALABAMA AIR NATIONAL GUARD
POL FACILITY
MONTGOMERY, ALABAMA

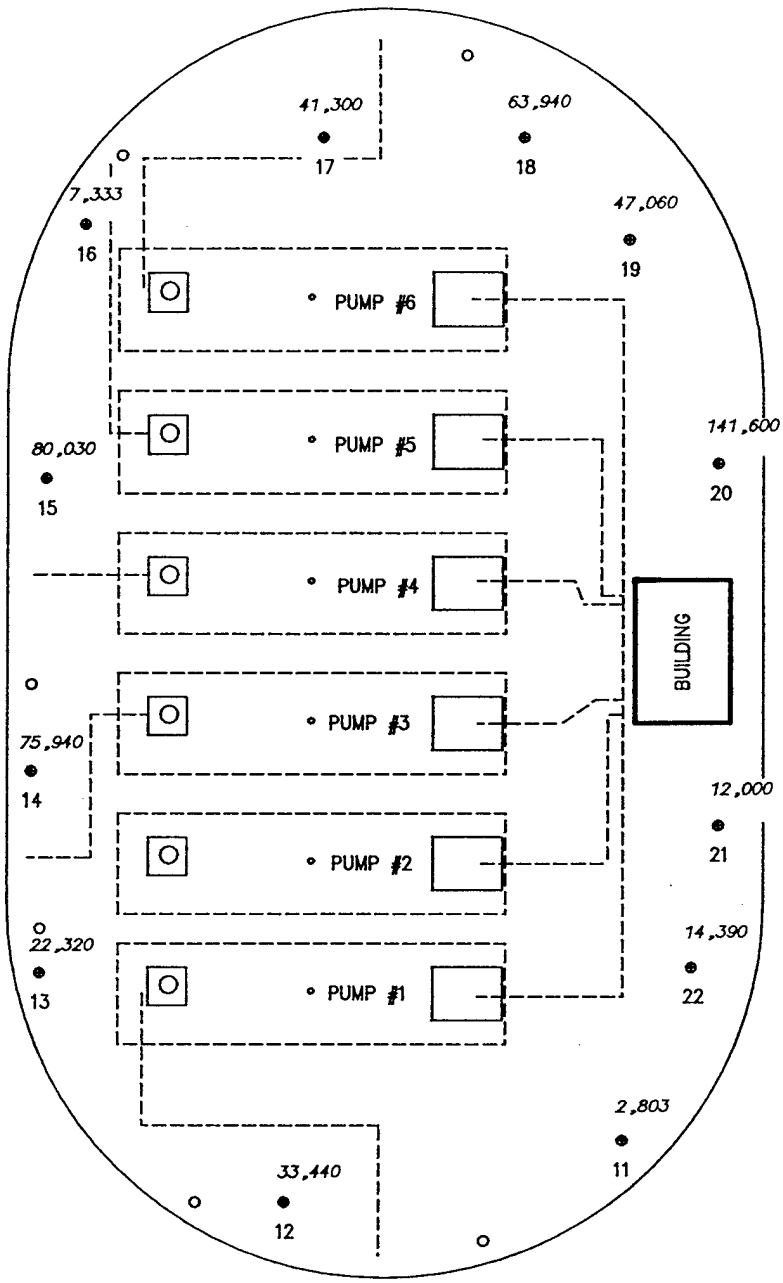


0 15 30

FEET

⊕ SOIL GAS SAMPLE LOCATION

o TANK FILL

FIGURE 7. FID Total Volatiles in Soil Gas (calc'd ppb v/v)

TARGET ENVIRONMENTAL SERVICES, INC.

ALABAMA AIR NATIONAL GUARD
POL FACILITY
MONTGOMERY, ALABAMA

This map is integral to a written report and should be viewed in that context.

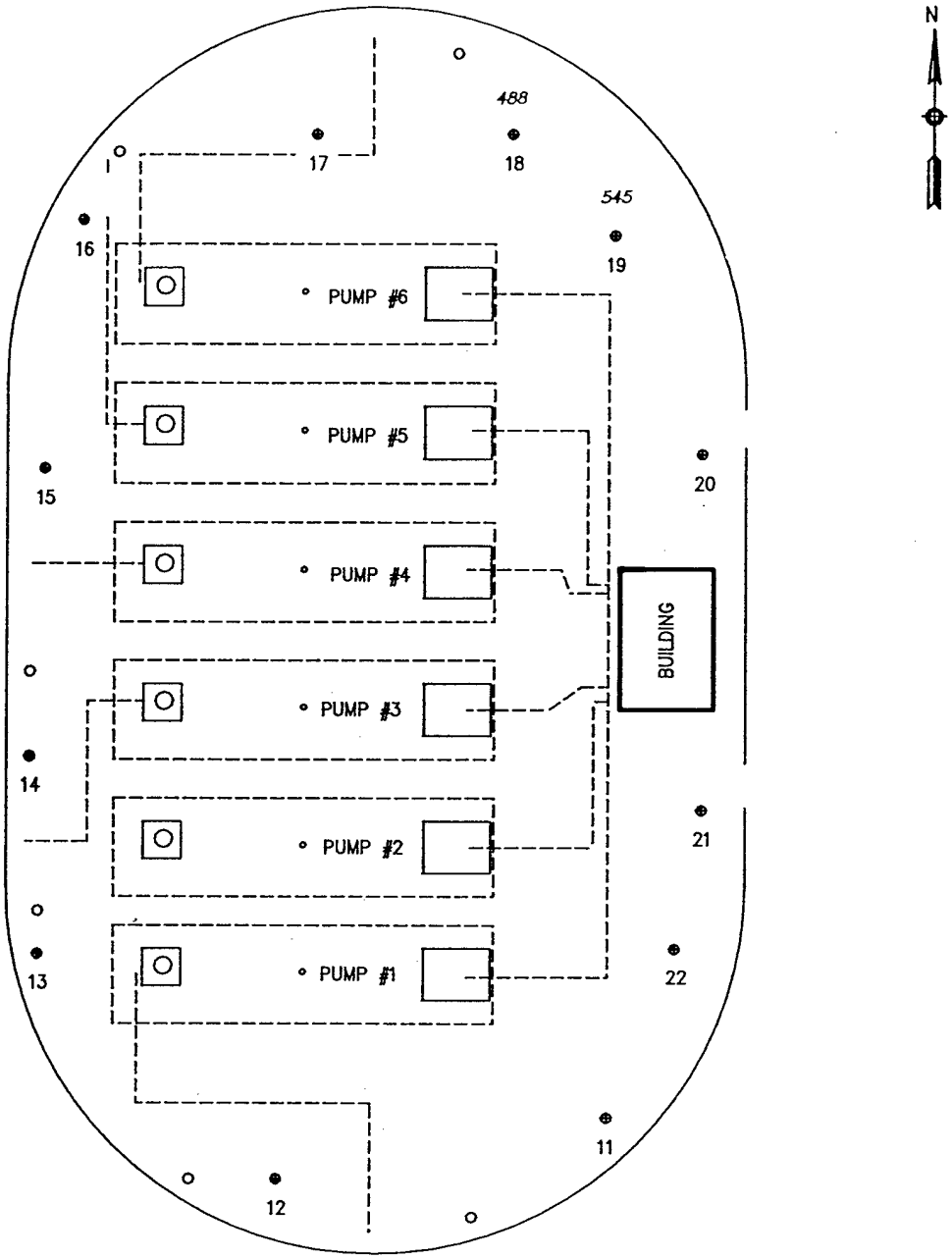


0 15 30

FEET

● SOIL GAS SAMPLE LOCATION

o TANK FILL

FIGURE 8. Benzene in Soil Gas (ppb)

TARGET ENVIRONMENTAL SERVICES, INC.

This map is integral to a written report and should be viewed in that context.

ALABAMA AIR NATIONAL GUARD
POL FACILITY
MONTGOMERY, ALABAMA

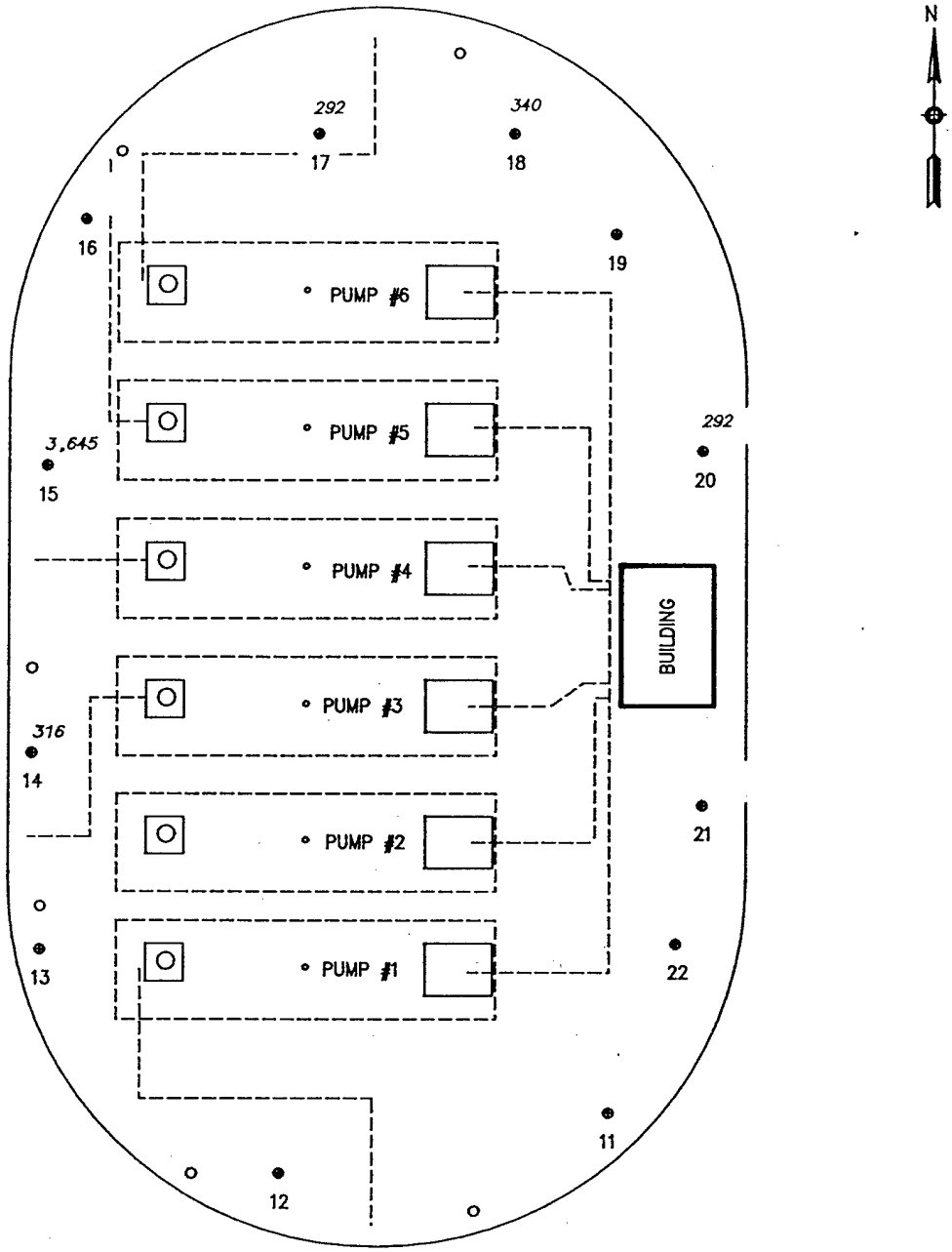


0 15 30

FEET

⊕ SOIL GAS SAMPLE LOCATION

o TANK FILL

FIGURE 9. Toluene in Soil Gas (ppb)

TARGET ENVIRONMENTAL SERVICES, INC.

This map is integral to a written report and should be viewed in that context.

ALABAMA AIR NATIONAL GUARD
POL FACILITY
MONTGOMERY, ALABAMA

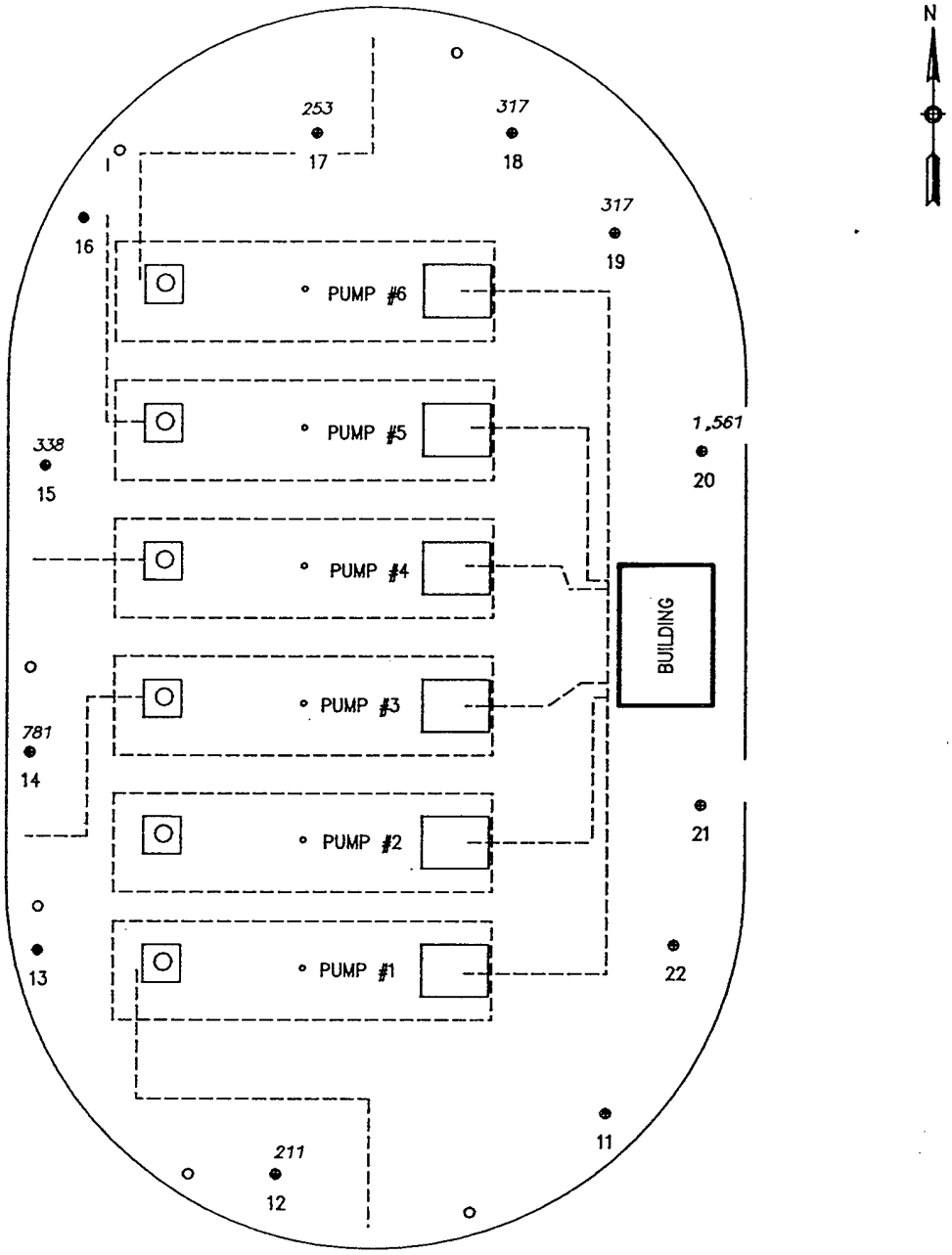


FIGURE 10. Ethylbenzene in Soil Gas (ppb)

TARGET ENVIRONMENTAL SERVICES, INC.

This map is integral to a written report and should be viewed in that context.

ALABAMA AIR NATIONAL GUARD
POL FACILITY
MONTGOMERY, ALABAMA

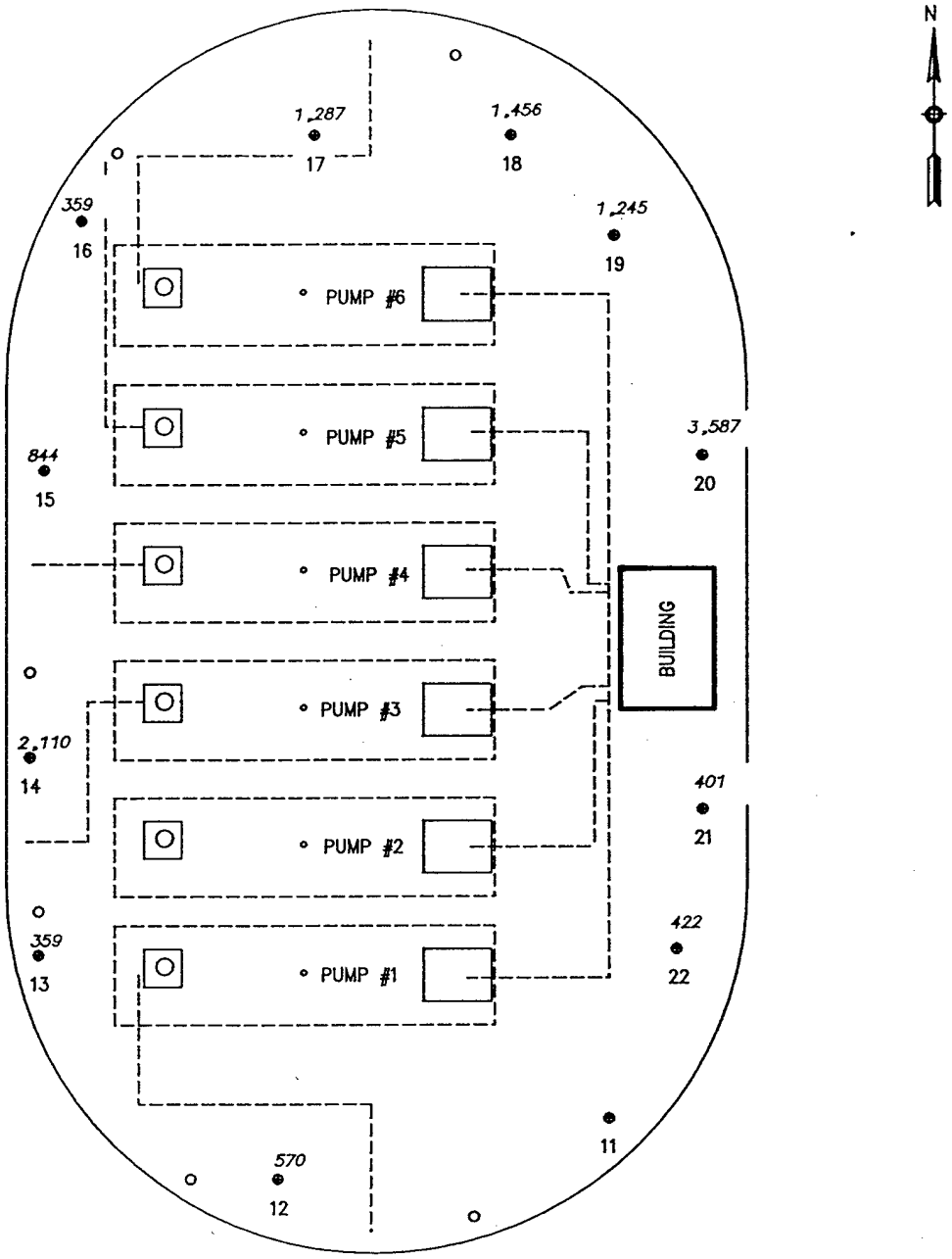


0 15 30

FEET

● SOIL GAS SAMPLE LOCATION

o TANK FILL

FIGURE 11. meta- and para-Xylene in Soil Gas (ppb)

TARGET ENVIRONMENTAL SERVICES, INC.

This map is integral to a written report and should be viewed in that context.

ALABAMA AIR NATIONAL GUARD
POL FACILITY
MONTGOMERY, ALABAMA

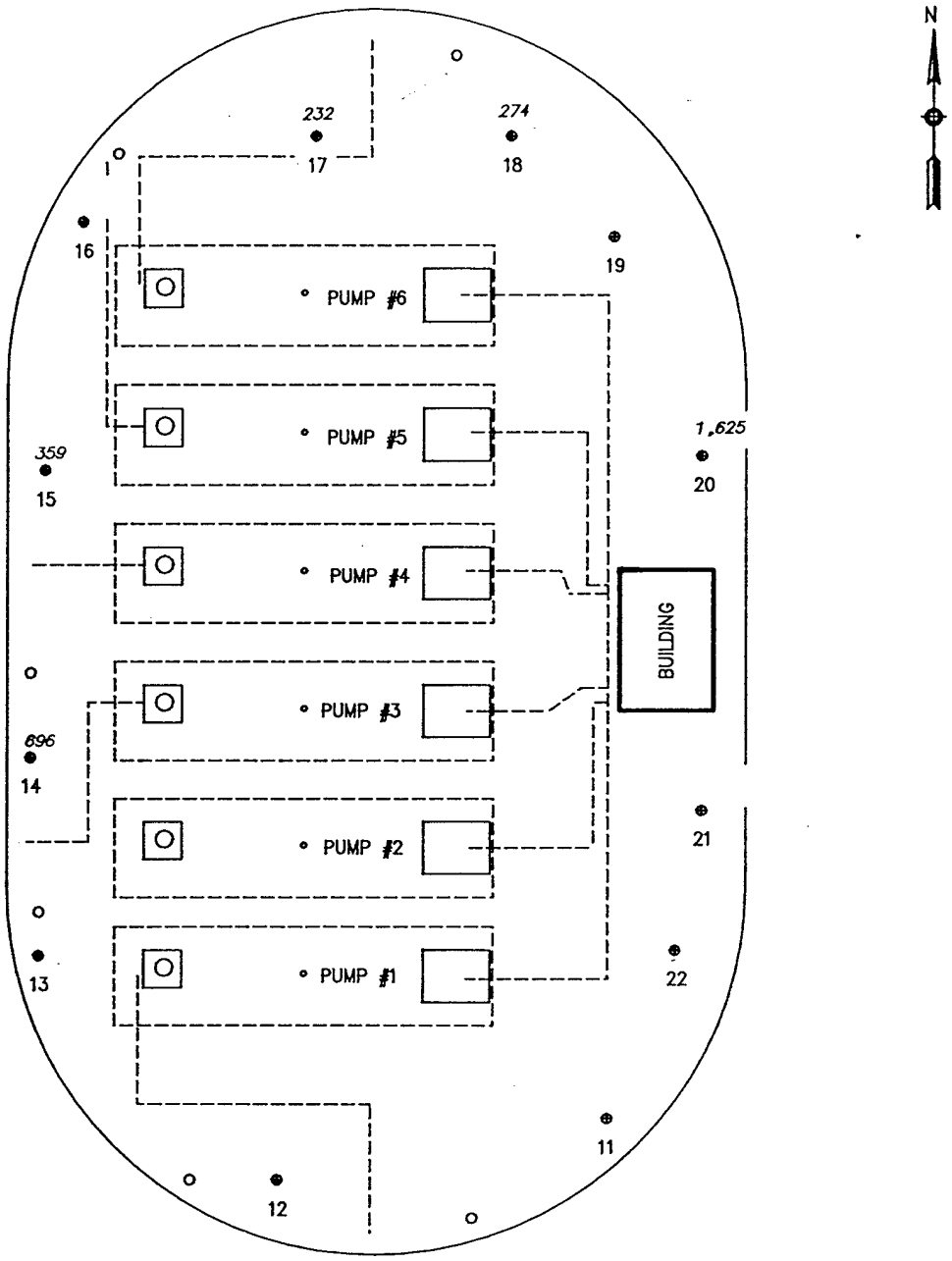


0 15 30

FEET

● SOIL GAS SAMPLE LOCATION

o TANK FILL

FIGURE 12. ortho-Xylene in Soil Gas (ppb)

TARGET ENVIRONMENTAL SERVICES, INC.

This map is integral to a written report and should be viewed in that context.

ALABAMA AIR NATIONAL GUARD
POL FACILITY
MONTGOMERY, ALABAMA

# Appendix B
# GEOTECHNICAL RESULTS

**TTL, Inc.** PRACTICING IN THE GEOSCIENCES

3516 Greensboro Avenue • P.O. Drawer 1128 • Tuscaloosa, Alabama 35403 • Telephone 205-345-0816 • FAX 205-345-0992

# SOIL ANALYSES REPORT

KILMAN BROTHERS, INC.
DANNELLY A.N.G. FIELD
MGM27526.S.I.M.G.
MAY, 1991

## PERMEABILITY DATA

| SAMPLE I.D. | DEPTH | PERMEABILITY COEFFICIENT "k" | INSITU DRY UNIT WEIGHT | AS RECEIVED MOISTURE |
|---|---|---|---|---|
| OWS-3 (Site 2) | 8'-10' | $2.3 \times 10^{-6}$ cm/sec | 89.7 pcf | 31.5 % |
| OWS-4 (Site 2) | 8'-10' | $1.3 \times 10^{-8}$ cm/sec | 91.6 pcf | 29.0 % |
| POL-8 | 10'-12' | $7.2 \times 10^{-9}$ cm/sec | 88.3 pcf | 34.7 % |

## CALCIUM CARBONATE DATA

| SAMPLE IDENTIFICATION | CALCIUM CARBONATE EQUIVALENT (% $CaCO_3$) |
|---|---|
| Box Sample (no label) | 35.6 % |

TTL, Inc.

Britette L. Lee

Britette L. Lee, Geologist

# Appendix C
# SUMMARY TABLES OF ANALYTICAL DATA

# BACKGROUND INFORMATION
## 187th Fighter Group
## DANNELLY ANG - Montgomery, Alabama [a]

| Client Sample ID | | | | B1P-S-0-2 | B1P-S-8.5-10 | B1P-S-18.5-20 | B1P-S18.5-20D | B3P-S-8.5-10 | B3P-S-13.5-15 | B3P-S-28.5-30 |
|---|---|---|---|---|---|---|---|---|---|---|
| Lab Sample Number | | | | 28909001 | 28909002 | 28909003 | 28909004 | 28922001 | 28922002 | 28922003 |
| Matrix | | | | SOIL | SOIL | SOIL | SOIL | SOIL | SOIL | SOIL |
| Sample Date | | | | 2/26/91 | 2/26/91 | 2/26/91 | 2/26/91 | 2/27/91 | 2/27/91 | 2/27/91 |
| | MCL | CRDL | Action Levels | | | | | | | |
| Volatile Compounds | ug/L | ug/kg | ug/kg/ug/L | | | | | | | |
| 2-Butanone | N/A | 10 | N/A/N/A | | | | | | | |
| Acetone | N/A | 10 | 8E+06/4,000 | 16 B | 33 B | 110 B | 55 B | 13 B | 15 B | 31 B |
| Carbon Disulfide | N/A | 5 | 8E+06/4,000 | | | | | | | |
| Ethyl Benzene | 7E+02 | 5 | 8E+06/4,000 | | | | | | | 6 J |
| Methylene Chloride | N/A | 5 | 90,000/5 | 8 B | 31 B | 35 B | 33 B | 8 B | 7 B | 8 B |
| Toluene | 1E+03 | 5 | 2E+08/10,000 | | | | | 1 J | | 3 J |
| Xylene (total) | 1E+04 | 5 | 2E+08/70,000 | | | | | | | 4 J |
| Chloromethane | N/A | 10 | N/A/N/A | | | | | | | |
| Bromomethane | N/A | 10 | 100,000/N/A | | | | | | | |
| Vinyl Chloride | 2 | 10 | N/A/N/A | | | | | | | |
| Chloroethane | N/A | 10 | N/A/N/A | | | | | | | |
| 1,1-Dichloroethene | N/A | 5 | N/A/N/A | | | | | | | |
| Acrylonitrile | N/A | | 1000/0.06 | | | | | | | |

Notes:

B - Applies to organic data only. Present in the corresponding method blank.
J - Applies to organic data only. Value detected is greater than zero but less than the CRDL.
MCL - Maximum Contaminant Level (U.S. Drinking Water Standards)
CRDL - Contract Required Detection Limit
Action levels proposed in Appendix A of 40CFR254.521(a)
Blank Space - Value is below the Method Detection Limit(MDL).
N/A - Not Applicable
(a) - Data reported in ug/kg (soil) and ug/L (water).

# BACKGROUND INFORMATION
## 187th Fighter Group
## DANNELLY ANG - Montgomery, Alabama [a]

| Client Sample ID | | | | B1P-S-0-2 | B1P-S-8.5-10 | B1P-S-18.5-20 | B1P-S18.5-20D | B3P-S-8.5-10 | B3P-S-13.5-15 | B3P-S-28.5-30 |
|---|---|---|---|---|---|---|---|---|---|---|
| Lab Sample Number | | | | 28909001 | 28909002 | 28909003 | 28909004 | 28922001 | 28922002 | 28922003 |
| Matrix | | | | SOIL | SOIL | SOIL | SOIL | SOIL | SOIL | SOIL |
| Sample Date | | | | 2/26/91 | 2/26/91 | 2/26/91 | 2/26/91 | 2/27/91 | 2/27/91 | 2/27/91 |
| | MCL | CRDL | Action Level | | | | | | | |
| Volatile Compounds | ug/L | ug/kg | ug/kg/ug/L | | | | | | | |
| 1,1-Dichloroethane | N/A | 5 | N/A/N/A | | | | | | | |
| 1,2-Dichloroethene (total) | N/A | 5 | 8,000/N/A | | | | | | | |
| Chloroform | 1E+02 | 5 | N/A/N/A | | | | | | | |
| 1,2-Dichloroethane | 5 | 5 | 20,000/400 | | | | | | | |
| 1,1,1-Trichloroethane | 2E+02 | 5 | 2E+06/700 | | | | | | | |
| Carbon Tetrachloride | 5 | 5 | N/A/N/A | | | | | | | |
| Vinyl Acetate | N/A | 10 | N/A/N/A | | | | | | | |
| Bromodichloromethane | 1E+02 | 5 | 500/0.02 | | | | | | | |
| 1,2-Dichloropropane | 5 | 5 | N/A/N/A | | | | | | | |
| cis-1,3-Dichloropropene | N/A | 5 | 40,000/20 | | | | | | | |
| Trichloroethene | 5 | 5 | 2E+06/700 | | | | | | | |
| Dibromochloromethane | N/A | 5 | 2E+06/7,000 | | | | | | | |

Notes:

B - Applies to organic data only. Present in the corresponding method blank.
J - Applies to organic data only. Value detected is greater than zero but less than the CRDL.
MCL - Maximum Contaminant Level (U.S. Drinking Water Standards)
CRDL - Contract Required Detection Limit
Action levels proposed in Appendix A of 40CFR254.521(a)
Blank Space - Value is below the Method Detection Limit (MDL).
N/A - Not Applicable
(a) - Data reported in ug/kg (soil) and ug/L (water).

a:\dang\bkgvocs2

# BACKGROUND INFORMATION
## 187th Fighter Group
## DANNELLY ANG - Montgomery, Alabama [a]

| Client Sample ID | | | | B1P-S-0-2 | B1P-S-8.5-10 | B1P-S-18.5-20 | B1P-S18.5-20D | B3P-S-8.5-10 | B3P-S-13.5-15 | B3P-S-28.5-30 |
|---|---|---|---|---|---|---|---|---|---|---|
| Lab Sample Number | | | | 28909001 | 28909002 | 28909003 | 28909004 | 28922001 | 28922002 | 28922003 |
| Matrix | | | | SOIL | SOIL | SOIL | SOIL | SOIL | SOIL | SOIL |
| Sample Date | | | | 2/26/91 | 2/26/91 | 2/26/91 | 2/26/91 | 2/27/91 | 2/27/91 | 2/27/91 |
| | MCL | CRDL | Action Levels | | | | | | | |
| Volatile Compounds | ug/L | ug/kg | ug/kg/ug/L | | | | | | | |
| 1,1,2-Trichloroethane | 5 | 5 | 100,000/6.0 | | | | | | | |
| Benzene | 5 | 5 | N/A/N/A | | | | | | | |
| trans-1,3-Dichloropropene | N/A | 5 | 20,000/400 | | | | | | | |
| Bromoform | 1E+02 | 5 | 2E+06/700 | | | | | | | |
| 4-Methyl-2-Pentanone | N/A | 10 | N/A/N/A | | | | | | | |
| 2-Hexanone | N/A | 10 | N/A/N/A | | | | | | | |
| Tetrachloroethene | 5 | 5 | N/A/N/A | | | | | | | |
| 1,1,2,2-Tetrachloroethane | N/A | 5 | 40,000/20 | | | | | | | |
| Chlorobenzene | N/A | 5 | 2E+06/700 | | | | | | | |
| Styrene | 1E+02 | 5 | 2E+06/7,000 | | | | | | | |

Notes:

B - Applies to organic data only. Present in the corresponding method blank.
J - Applies to organic data only. Value detected is greater than zero but less than the CRDL.
MCL - Maximum Contaminant Level (U.S. Drinking Water Standards)
CRDL - Contract Required Detection Limit
Action levels proposed in Appendix A of 40CFR254.521(a)
Blank Space - Value is below the Method Detection Limit (MDL).
N/A - Not Applicable
(a) - Data reported in ug/kg (soil) and ug/L (water).

# BACKGROUND INFORMATION
## 187th Fighter Group
## DANNELLY ANG - Montgomery, Alabama [a]

| Client Sample ID | | | | | B5P-S-0-2 | B5P-S-8.5-10 | B5P-S-23.0-25 | B5P-S-23.0-25D | BG-MW-6 | BG-2P |
|---|---|---|---|---|---|---|---|---|---|---|
| Lab Sample Number | | | | | 28909005 | 28909006 | 28909007 | 28909008 | 18301001 | 18311001 |
| Matrix | | | | | SOIL | SOIL | SOIL | SOIL | WATER | WATER |
| Sample Date | | | | | 2/26/91 | 2/26/91 | 2/26/91 | 2/26/91 | 4/10/91 | 4/12/91 |
| | MCL | CRDL | CRDL | Action Levels | | | | | | |
| Volatile Compounds | ug/L | ug/kg | ug/L | ug/kg/ug/L | | | | | | |
| 2-Butanone | N/A | 10 | 10 | N/A/N/A | | | 8 J | | | |
| Acetone | N/A | 10 | 10 | 8E+06/4,000 | 27 B | 78 B | 110 B | | 16 B | |
| Carbon Disulfide | N/A | 5 | 5 | 8E+06/4,000 | | | 10 | | | |
| Ethyl Benzene | 7E+02 | 5 | 5 | 8E+06/4,000 | | | | | | |
| Methylene Chloride | N/A | 5 | 5 | 90,000/5 | 30 B | 9 B | 11 B | | 3 B | |
| Toluene | 1E+03 | 5 | 5 | 2E+08/10,000 | | | | | | |
| Xylene (total) | 1E+04 | 5 | 5 | 2E+08/70,000 | | | | | 1 B | |
| Chloromethane | N/A | 10 | 10 | N/A/N/A | | | | | | |
| Bromomethane | N/A | 10 | 10 | 100,000/N/A | | | | | | |
| Vinyl Chloride | 2 | 10 | 10 | N/A/N/A | | | | | | |
| Chloroethane | N/A | 10 | 10 | N/A/N/A | | | | | | |
| 1,1-Dichloroethene | N/A | 5 | 5 | N/A/N/A | | | | | | |
| Acrylonitrile | N/A | | | 1,000/0.06 | | | | | | 100 B |

Notes:

B - Applies to organic data only. Present in the corresponding method blank.
J - Applies to organic data only. Value detected is greater than zero but less than the CRDL.
MCL - Maximum Contaminant Level (U.S. Drinking Water Standards)
CRDL - Contract Required Detection Limit
Action levels proposed in Appendix A of 40CFR254.521(a)
Blank Space - Value is below the Method Detection Limit(MDL).
N/A - Not Applicable
(a) - Data reported in ug/kg (soil) and ug/L (water).

# BACKGROUND INFORMATION
## 187th Fighter Group
## DANNELLY ANG - Montgomery, Alabama [a]

| Client Sample ID | | | | | B5P-S-0-2 | B5P-S-8.5-10 | B5P-S-23.0-25 | B5P-S-23.0-25D | BG-MW-6 | BG-2P |
|---|---|---|---|---|---|---|---|---|---|---|
| Lab Sample Number | | | | | 28909005 | 28909006 | 28909007 | 28909008 | 18301001 | 18311001 |
| Matrix | | | | | SOIL | SOIL | SOIL | SOIL | WATER | WATER |
| Sample Date | | | | | 2/26/91 | 2/26/91 | 2/26/91 | 2/26/91 | 4/10/91 | 4/12/91 |
| | MCL | CRDL | CRDL | Action Levels | | | | | | |
| Volatile Compounds | ug/L | ug/kg | ug/L | ug/kg/ug/L | | | | | | |
| 1,1-Dichloroethane | N/A | 5 | 5 | N/A/N/A | | | | | | |
| 1,2-Dichloroethene (total) | N/A | 5 | 5 | 8,000/N/A | | | | | | |
| Chloroform | 1E+02 | 5 | 5 | 100,000/6.0 | | | | | | |
| 1,2-Dichlorocthane | 5 | 5 | 5 | N/A/5.0 | | | | | | |
| 1,1,1-Trichloroethane | 2E+02 | 5 | 5 | 7E+06/3,000 | | | | | | |
| Carbon Tetrachloride | 5 | 5 | 5 | 5000/0.3 | | | | | | |
| Vinyl Acetate | N/A | 10 | 10 | N/A/N/A | | | | | | |
| Bromodichloromethane | 1E+02 | 5 | 5 | 500/0.02 | | | | | | |
| 1,2-Dichloropropane | 5 | 5 | 5 | N/A/N/A | | | | | | |
| cis-1,3-Dichloropropene | N/A | 5 | 5 | 20,000/10.0 | | | | | | |
| Trichloroethene | 5 | 5 | 5 | N/A/N/A | | | | | | |
| Dibromochloromethane | N/A | 5 | 5 | N/A/N/A | | | | | | |

Notes:

B - Applies to organic data only. Present in the corresponding method blank.
J - Applies to organic data only. Value detected is greater than zero but less than the CRDL.
MCL - Maximum Contaminant Level (U.S. Drinking Water Standards)
CRDL - Contract Required Detection Limit
Action levels proposed in Appendix A of 40CFR254.521(a)
Blank Space - Value is below the Method Detection Limit(MDL).
N/A - Not Applicable
(a) - Data reported in ug/kg (soil) and ug/L (water).

# BACKGROUND INFORMATION
## 187th Fighter Group
## DANNELLY ANG - Montgomery, Alabama [a]

| Client Sample ID | | | | | B5P-S-0-2 | B5P-S-8.5-10 | B5P-S-23.0-25 | B5P-S-23.0-25D | BG-MW-6 | BG-2P |
|---|---|---|---|---|---|---|---|---|---|---|
| Lab Sample Number | | | | | 28909005 | 28909006 | 28909007 | 28909008 | 18301001 | 18311001 |
| Matrix | | | | | SOIL | SOIL | SOIL | SOIL | WATER | WATER |
| Sample Date | | | | | 2/26/91 | 2/26/91 | 2/26/91 | 2/26/91 | 4/10/91 | 4/12/91 |
| | MCL | CRDL | CRDL | Action Levels | | | | | | |
| Volatile Compounds | ug/L | ug/kg | ug/L | ug/kg/ug/L | | | | | | |
| trans-1,3-Dichloropropene | N/A | 5 | 5 | 20,000/400 | | | | | | |
| Bromoform | 1E+02 | 5 | 5 | 2E+06/700 | | | | | | |
| 4-Methyl-2-Pentanone | N/A | 10 | 10 | N/A/N/A | | | | | | |
| 2-Hexanone | N/A | 10 | 10 | N/A/N/A | | | | | | |
| Tetrachloroethene | 5 | 5 | 5 | N/A/N/A | | | | | | |
| 1,1,2,2-Tetrachloroethane | N/A | 5 | 5 | 40,000/20 | | | | | | |
| Chlorobenzene | N/A | 5 | 5 | 2E+06/700 | | | | | | |
| Styrene | 1E+02 | 5 | 5 | 2E+06/7,000 | | | | | | |

Notes:

B - Applies to organic data only. Present in the corresponding method blank.
J - Applies to organic data only. Value detected is greater than zero but less than the CRDL.
MCL - Maximum Contaminant Level (U.S. Drinking Water Standards)
CRDL - Contract Required Detection Limit
Action levels proposed in Appendix A of 40CFR254.521(a)
Blank Space - Value is below the Method Detection Limit(MDL).
N/A - Not Applicable
(a) - Data reported in ug/kg (soil) and ug/L (water).

# BACKGROUND INFORMATION
## 187th Fighter Group
## DANNELLY ANG - Montgomery, Alabama [a]

| Client Sample ID | | | B1P-S-0-2 | B1P-S-8.5-10 | B1P-S-18.5-20 | B1P-S18.5-20D | B3P-S-8.5-10 | B3P-S-13.5-15 | B3P-S-28.5-30 |
|---|---|---|---|---|---|---|---|---|---|
| Lab Sample Number | | | 28909001 | 28909002 | 28909003 | 28909004 | 28922001 | 28922002 | 28922003 |
| Matrix | | | SOIL | SOIL | SOIL | SOIL | SOIL | SOIL | SOIL |
| Sample Date | | | 2/26/91 | 2/26/91 | 2/26/91 | 2/26/91 | 2/27/91 | 2/27/91 | 2/27/91 |
| | CRDL | Action Levels | | | | | | | |
| Semivolatile Compounds | ug/kg | ug/kg | | | | | | | |
| Fluoranthene | 330 | N/A | 79 J | | | | | | |
| Phenanthrene | 330 | N/A | 52 J | | | | | | |
| Pyrene | 330 | N/A | 56 J | | | | | | |
| bis(2-Ethylhexyl)-phthalate | 330 | 50,000 | | 1600 B | 1700 B | | 730 B | 1200 B | 1100 B |
| Phenol | 330 | 5E+07 | | | | | | | |
| bis(2-Chloroethyl)Ether | 330 | 600 | | | | | | | |
| 2-Chlorophenol | 330 | 400,000 | | | | | | | |
| 1,3-Dichlorobenzene | 330 | N/A | | | | | | | |
| 1,4-Dichlorobenzene | 330 | N/A | | | | | | | |
| Benzyl Alcohol | 330 | N/A | | | | | | | |
| 1,2-Dichlorobenzene | 330 | N/A | | | | | | | |
| 2-Methylphenol | 330 | N/A | | | | | | | |

Notes:

B - Applies to organic data only. Present in the corresponding method blank.
J - Applies to organic data only. Value detected is greater than zero but less than the CRDL.
CRDL - Contract Required Detection Limit
Action levels proposed in Appendix A of 40CFR254.521(a)
Blank Space - Value is below the Method Detection Limit(MDL).
N/A - Not Applicable
(a) - Data reported in ug/kg.

# BACKGROUND INFORMATION
## 187th Fighter Group
## DANNELLY ANG - Montgomery, Alabama [a]

| Client Sample ID | | | B1P-S-0-2 | B1P-S-8.5-10 | B1P-S-18.5-20 | B1P-S18.5-20D | B3P-S-8.5-10 | B3P-S-13.5-15 | B3P-S-28.5-30 |
|---|---|---|---|---|---|---|---|---|---|
| Lab Sample Number | | | 28909001 | 28909002 | 28909003 | 28909004 | 28922001 | 28922002 | 28922003 |
| Matrix | | | SOIL | SOIL | SOIL | SOIL | SOIL | SOIL | SOIL |
| Sample Date | | | 2/26/91 | 2/26/91 | 2/26/91 | 2/26/91 | 2/27/91 | 2/27/91 | 2/27/91 |
| | CRDL | Action Levels | | | | | | | |
| Semivolatile Compounds | ug/kg | ug/kg | | | | | | | |
| bis(2-Chloroisopropyl)Ether | 330 | N/A | | | | | | | |
| 4-Methylphenol | 330 | N/A | | | | | | | |
| N-Nitroso-di-n-propylamine | 330 | 100 | | | | | | | |
| Hexachloroethane | 330 | 80,000 | | | | | | | |
| Nitrobenzene | 330 | 40,000 | | | | | | | |
| Isophorone | 330 | 2E+06 | | | | | | | |
| 2-Nitrophenol | 330 | N/A | | | | | | | |
| 2,4-Dimethylphenol | 330 | N/A | | | | | | | |
| Benzoic Acid | 1600 | N/A | | | | | | | |
| bis(2-Chloroethoxy)Methane | 330 | N/A | | | | | | | |
| 2,4-Dichlorophenol | 330 | 200,000 | | | | | | | |
| 1,2,4-Trichlorobenzene | 330 | 2E+06 | | | | | | | |

Notes:

B - Applies to organic data only. Present in the corresponding method blank.
J - Applies to organic data only. Value detected is greater than zero but less than the CRDL.
CRDL - Contract Required Detection Limit
Action levels proposed in Appendix A of 40CFR254.521(a)
Blank Space - Value is below the Method Detection Limit(MDL).
N/A - Not Applicable
(a) - Data reported in ug/kg.

# BACKGROUND INFORMATION
## 187th Fighter Group
## DANNELLY ANG - Montgomery, Alabama [a]

| Client Sample ID | | | B1P-S-0-2 | B1P-S-8.5-10 | B1P-S-18.5-20 | B1P-S18.5-20D | B3P-S-8.5-10 | B3P-S-13.5-15 | B3P-S-28.5-30 |
|---|---|---|---|---|---|---|---|---|---|
| Lab Sample Number | | | 28909001 | 28909002 | 28909003 | 28909004 | 28922001 | 28922002 | 28922003 |
| Matrix | | | SOIL | SOIL | SOIL | SOIL | SOIL | SOIL | SOIL |
| Sample Date | | | 2/26/91 | 2/26/91 | 2/26/91 | 2/26/91 | 2/27/91 | 2/27/91 | 2/27/91 |
| | CRDL | Action Levels | | | | | | | |
| Semivolatile Compounds | ug/kg | ug/kg | | | | | | | |
| Naphthalene | 330 | N/A | | | | | | | |
| 4-Chloroaniline | 330 | N/A | | | | | | | |
| Hexachlorobutadiene | 330 | 90,000 | | | | | | | |
| 4-Chloro-3-methylphenol | 330 | N/A | | | | | | | |
| 2-Methylnaphthalene | 330 | N/A | | | | | | | |
| Hexachlorocyclopentadiene | 330 | 600,000 | | | | | | | |
| 2,4,6-Trichlorophenol | 330 | 40,000 | | | | | | | |
| 2,4,5-Trichlorophenol | 1600 | 8E+06 | | | | | | | |
| 2-Chloronaphthalene | 330 | N/A | | | | | | | |
| 2-Nitroaniline | 1600 | N/A | | | | | | | |
| Dimethyl Phthalate | 330 | N/A | | | | | | | |
| Acenaphthylene | 330 | N/A | | | | | | | |

Notes:

B - Applies to organic data only. Present in the corresponding method blank.
J - Applies to organic data only. Value detected is greater than zero but less than the CRDL.
CRDL - Contract Required Detection Limit
Action levels proposed in Appendix A of 40CFR254.521(a)
Blank Space - Value is below the Method Detection Limit(MDL).
N/A - Not Applicable
(a) - Data reported in ug/kg.

# BACKGROUND INFORMATION
## 187th Fighter Group
## DANNELLY ANG - Montgomery, Alabama [a]

| Client Sample ID | | | B1P-S-0-2 | B1P-S-8.5-10 | B1P-S-18.5-20 | B1P-S18.5-20D | B3P-S-8.5-10 | B3P-S-13.5-15 | B3P-S-28.5-30 |
|---|---|---|---|---|---|---|---|---|---|
| Lab Sample Number | | | 28909001 | 28909002 | 28909003 | 28909004 | 28922001 | 28922002 | 28922003 |
| Matrix | | | SOIL | SOIL | SOIL | SOIL | SOIL | SOIL | SOIL |
| Sample Date | | | 2/26/91 | 2/26/91 | 2/26/91 | 2/26/91 | 2/27/91 | 2/27/91 | 2/27/91 |
| | CRDL | Action Levels | | | | | | | |
| Semivolatile Compounds | ug/kg | ug/kg | | | | | | | |
| 2,6-Dinitrotoluene | 330 | 1000 | | | | | | | |
| 3-Nitroaniline | 1600 | N/A | | | | | | | |
| Acenaphthene | 330 | N/A | | | | | | | |
| 2,4-Dintrophenol | 1600 | 200,000 | | | | | | | |
| 4-Nitrophenol | 1600 | N/A | | | | | | | |
| Dibenzofuran | 330 | N/A | | | | | | | |
| 2,4-Dinitrotoluene | 330 | N/A | | | | | | | |
| Diethylphthalate | 330 | 6E+07 | | | | | | | |
| 4-Chlorophenyl-phenylether | 330 | N/A | | | | | | | |
| Fluorene | 330 | N/A | | | | | | | |
| 4-Nitroaniline | 1600 | N/A | | | | | | | |
| 4,6-Dinitro-2-methylphenol | 1600 | N/A | | | | | | | |

Notes:

B - Applies to organic data only. Present in the corresponding method blank.
J - Applies to organic data only. Value detected is greater than zero but less than the CRDL.
CRDL - Contract Required Detection Limit
Action levels proposed in Appendix A of 40CFR254.521(a)
Blank Space - Value is below the Method Detection Limit(MDL).
N/A - Not Applicable
(a) - Data reported in ug/kg.

# BACKGROUND INFORMATION
## 187th Fighter Group
## DANNELLY ANG - Montgomery, Alabama [a]

| Client Sample ID | | | B1P-S-0-2 | B1P-S-8.5-10 | B1P-S-18.5-20 | B1P-S18.5-20D | B3P-S-8.5-10 | B3P-S-13.5-15 | B3P-S-28.5-30 |
|---|---|---|---|---|---|---|---|---|---|
| Lab Sample Number | | | 28909001 | 28909002 | 28909003 | 28909004 | 28922001 | 28922002 | 28922003 |
| Matrix | | | SOIL | SOIL | SOIL | SOIL | SOIL | SOIL | SOIL |
| Sample Date | | | 2/26/91 | 2/26/91 | 2/26/91 | 2/26/91 | 2/27/91 | 2/27/91 | 2/27/91 |
| | CRDL | Action Levels | | | | | | | |
| Semivolatile Compounds | ug/kg | ug/kg | | | | | | | |
| N-Nitrosodiphenylamine(1) | 330 | 100,000 | | | | | | | |
| 4-Bromophenyl-phenylether | 330 | N/A | | | | | | | |
| Hexachlorobenzene | 330 | N/A | | | | | | | |
| Pentachlorophenol | 1600 | 2E+06 | | | | | | | |
| Anthracene | 330 | N/A | | | | | | | |
| Di-n-Buthylphthalate | 330 | 8E+06 | | | | | | | |
| Butylbenzylphthalate | 330 | 2E+07 | | | | | | | |
| 3,3'-Dichlorobenzidine | 660 | 2000 | | | | | | | |
| Benzo(a)anthracene | 330 | N/A | | | | | | | |
| Chrysene | 330 | N/A | | | | | | | |
| Di-n-octylphthalate | 330 | N/A | | | | | | | |
| Benzo(b)fluoranthene | 330 | N/A | | | | | | | |

Notes:

B - Applies to organic data only. Present in the corresponding method blank.
J - Applies to organic data only. Value detected is greater than zero but less than the CRDL.
CRDL - Contract Required Detection Limit
Action levels proposed in Appendix A of 40CFR254.521(a)
Blank Space - Value is below the Method Detection Limit(MDL).
N/A - Not Applicable
(a) - Data reported in ug/kg.

# BACKGROUND INFORMATION
## 187th Fighter Group
## DANNELLY ANG - Montgomery, Alabama [a]

| Client Sample ID | | | B1P-S-0-2 | B1P-S-8.5-10 | B1P-S-18.5-20 | B1P-S18.5-20D | B3P-S-8.5-10 | B3P-S-13.5-15 | B3P-S-28.5-30 |
|---|---|---|---|---|---|---|---|---|---|
| Lab Sample Number | | | 28909001 | 28909002 | 28909003 | 28909004 | 28922001 | 28922002 | 28922003 |
| Matrix | | | SOIL | SOIL | SOIL | SOIL | SOIL | SOIL | SOIL |
| Sample Date | | | 2/26/91 | 2/26/91 | 2/26/91 | 2/26/91 | 2/27/91 | 2/27/91 | 2/27/91 |
| | CRDL | Action Levels | | | | | | | |
| Semivolatile Compounds | ug/kg | ug/kg | | | | | | | |
| Benzo(b)fluoranthene | 330 | N/A | | | | | | | |
| Benzo(k)fluoranthene | 330 | N/A | | | | | | | |
| Benzo(a)pyrene | 330 | N/A | | | | | | | |
| Indeno(1,2,3-cd)Pyrene | 330 | N/A | | | | | | | |
| Dibenz(a,h)Anthracene | 330 | N/A | | | | | | | |
| benzo(g,h,i)perylene | 330 | N/A | | | | | | | |

Notes:

B - Applies to organic data only. Present in the corresponding method blank.
J - Applies to organic data only. Value detected is greater than zero but less than the CRDL.
CRDL - Contract Required Detection Limit
Action levels proposed in Appendix A of 40CFR254.521(a)
Blank Space - Value is below the Method Detection Limit(MDL).
N/A - Not Applicable
(a) - Data reported in ug/kg.

# BACKGROUND INFORMATION
## 187th Fighter Group
## DANNELLY ANG - Montgomery, Alabama [a]

| Client Sample ID | | | B5P-S-0-2 | B5P-S-8.5-10 | B5P-S-23.0-25 | B5P-S-23.0-25D |
|---|---|---|---|---|---|---|
| Lab Sample Number | | | 28909005 | 28909006 | 28909007 | 28909008 |
| Matrix | | | SOIL | SOIL | SOIL | SOIL |
| Sample Date | | | 2/26/91 | 2/26/91 | 2/26/91 | 2/26/91 |
| | CRDL | Action Levels | | | | |
| Semivolatile Compounds | ug/kg | ug/kg | | | | |
| Fluoranthene | 330 | N/A | | | | |
| Phenanthrene | 330 | N/A | | | | |
| Pyrene | 330 | N/A | | | | |
| bis(2-Ethylhexyl)-phthalate | 330 | 50,000 | 970 B | 2500 B | 3700 B | 1400 B |
| Phenol | 330 | 5E+07 | | | | |
| bis(2-Chloroethyl)Ether | 330 | 600 | | | | |
| 2-Chlorophenol | 330 | 400,000 | | | | |
| 1,3-Dichlorobenzene | 330 | N/A | | | | |
| 1,4-Dichlorobenzene | 330 | N/A | | | | |
| Benzyl Alcohol | 330 | N/A | | | | |
| 1,2-Dichlorobenzene | 330 | N/A | | | | |
| 2-Methylphenol | 330 | N/A | | | | |

Notes:

B - Applies to organic data only. Present in the corresponding method blank.
J - Applies to organic data only. Value detected is greater than zero but less than the CRDL.
CRDL - Contract Required Detection Limit
Action levels proposed in Appendix A of 40CFR254.521(a)
Blank Space - Value is below the Method Detection Limit(MDL).
N/A - Not Applicable
(a) - Data reported in ug/kg.

# BACKGROUND INFORMATION
## 187th Fighter Group
## DANNELLY ANG - Montgomery, Alabama [a]

| Client Sample ID | | | B5P-S-0-2 | B5P-S-8.5-10 | B5P-S-23.0-25 | B5P-S-23.0-25D |
|---|---|---|---|---|---|---|
| Lab Sample Number | | | 28909005 | 28909006 | 28909007 | 28909008 |
| Matrix | | | SOIL | SOIL | SOIL | SOIL |
| Sample Date | | | 2/26/91 | 2/26/91 | 2/26/91 | 2/26/91 |
| | CRDL | Action Levels | | | | |
| Semivolatile Compounds | ug/kg | ug/kg | | | | |
| bis(2-Chloroisopropyl)Ether | 330 | N/A | | | | |
| 4-Methylphenol | 330 | N/A | | | | |
| N-Nitroso-di-n-propylamine | 330 | 100 | | | | |
| Hexachloroethane | 330 | 80,000 | | | | |
| Nitrobenzene | 330 | 40,000 | | | | |
| Isophorone | 330 | 2E+06 | | | | |
| 2-Nitrophenol | 330 | N/A | | | | |
| 2,4-Dimethylphenol | 330 | N/A | | | | |
| Benzoic Acid | 1600 | N/A | | | | |
| bis(2-Chloroethoxy)Methane | 330 | N/A | | | | |
| 2,4-Dichlorophenol | 330 | 200,000 | | | | |
| 1,2,4-Trichlorobenzene | 330 | 2E+06 | | | | |

Notes:

B - Applies to organic data only. Present in the corresponding method blank.
J - Applies to organic data only. Value detected is greater than zero but less than the CRDL.
CRDL - Contract Required Detection Limit
Action levels proposed in Appendix A of 40CFR254.521(a)
Blank Space - Value is below the Method Detection Limit(MDL).
N/A - Not Applicable
(a) - Data reported in ug/kg.

# BACKGROUND INFORMATION
## 187th Fighter Group
## DANNELLY ANG - Montgomery, Alabama [a]

| Client Sample ID | | | B5P-S-0-2 | B5P-S-8.5-10 | B5P-S-23.0-25 | B5P-S-23.0-25D |
|---|---|---|---|---|---|---|
| Lab Sample Number | | | 28909005 | 28909006 | 28909007 | 28909008 |
| Matrix | | | SOIL | SOIL | SOIL | SOIL |
| Sample Date | | | 2/26/91 | 2/26/91 | 2/26/91 | 2/26/91 |
| | CRDL | Action Levels | | | | |
| Semivolatile Compounds | ug/kg | ug/kg | | | | |
| Naphthalene | 330 | N/A | | | | |
| 4-Chloroaniline | 330 | N/A | | | | |
| Hexachlorobutadiene | 330 | 90,000 | | | | |
| 4-Chloro-3-methylphenol | 330 | N/A | | | | |
| 2-Methylnaphthalene | 330 | N/A | | | | |
| Hexachlorocyclopentadiene | 330 | 600,000 | | | | |
| 2,4,6-Trichlorophenol | 330 | 40,000 | | | | |
| 2,4,5-Trichlorophenol | 1600 | 8E+06 | | | | |
| 2-Chloronaphthalene | 330 | N/A | | | | |
| 2-Nitroaniline | 1600 | N/A | | | | |
| Dimethyl Phthalate | 330 | N/A | | | | |
| Acenaphthylene | 330 | N/A | | | | |

Notes:

B - Applies to organic data only. Present in the corresponding method blank.
J - Applies to organic data only. Value detected is greater than zero but less than the CRDL.
CRDL - Contract Required Detection Limit
Action levels proposed in Appendix A of 40CFR254.521(a)
Blank Space - Value is below the Method Detection Limit(MDL).
N/A - Not Applicable
(a) - Data reported in ug/kg.

# BACKGROUND INFORMATION
## 187th Fighter Group
## DANNELLY ANG - Montgomery, Alabama [a]

| Client Sample ID | | | B5P-S-0-2 | B5P-S-8.5-10 | B5P-S-23.0-25 | B5P-S-23.0-25D |
|---|---|---|---|---|---|---|
| Lab Sample Number | | | 28909005 | 28909006 | 28909007 | 28909008 |
| Matrix | | | SOIL | SOIL | SOIL | SOIL |
| Sample Date | | | 2/26/91 | 2/26/91 | 2/26/91 | 2/26/91 |
| | CRDL | Action Levels | | | | |
| Semivolatile Compounds | ug/kg | ug/kg | | | | |
| 2,6-Dinitrotoluene | 330 | 1000 | | | | |
| 3-Nitroaniline | 1600 | N/A | | | | |
| Acenaphthene | 330 | N/A | | | | |
| 2,4-Dintrophenol | 1600 | 200,000 | | | | |
| 4-Nitrophenol | 1600 | N/A | | | | |
| Dibenzofuran | 330 | N/A | | | | |
| 2,4-Dinitrotoluene | 330 | N/A | | | | |
| Diethylphthalate | 330 | 6E+07 | | | | |
| 4-Chlorophenyl-phenylether | 330 | N/A | | | | |
| Fluorene | 330 | N/A | | | | |
| 4-Nitroaniline | 1600 | N/A | | | | |
| 4,6-Dinitro-2-methylphenol | 1600 | N/A | | | | |

Notes:

B - Applies to organic data only. Present in the corresponding method blank.
J - Applies to organic data only. Value detected is greater than zero but less than the CRDL.
CRDL - Contract Required Detection Limit
Action levels proposed in Appendix A of 40CFR254.521(a)
Blank Space - Value is below the Method Detection Limit(MDL).
N/A - Not Applicable
(a) - Data reported in ug/kg.

# BACKGROUND INFORMATION
## 187th Fighter Group
## DANNELLY ANG - Montgomery, Alabama [a]

| Client Sample ID | | | B5P-S-0-2 | B5P-S-8.5-10 | B5P-S-23.0-25 | B5P-S-23.0-25D |
|---|---|---|---|---|---|---|
| Lab Sample Number | | | 28909005 | 28909006 | 28909007 | 28909008 |
| Matrix | | | SOIL | SOIL | SOIL | SOIL |
| Sample Date | CRDL | Action Levels | 2/26/91 | 2/26/91 | 2/26/91 | 2/26/91 |
| | ug/kg | ug/kg | | | | |
| N-Nitrosodiphenylamine(1) | 330 | 100,000 | | | | |
| 4-Bromophenyl-phenylether | 330 | N/A | | | | |
| Hexachlorobenzene | 330 | N/A | | | | |
| Pentachlorophenol | 1600 | 2E+06 | | | | |
| Anthracene | 330 | N/A | | | | |
| Di-n-Buthylphthalate | 330 | 8E+06 | | | | |
| Butylbenzylphthalate | 330 | 2E+07 | | | | |
| 3,3'-Dichlorobenzidine | 660 | 2000 | | | | |
| Benzo(a)anthracene | 330 | N/A | | | | |
| Chrysene | 330 | N/A | | | | |
| Di-n-octylphthalate | 330 | N/A | | | | |
| Benzo(b)fluoranthene | 330 | N/A | | | | |

Notes:

B - Applies to organic data only. Present in the corresponding method blank.
J - Applies to organic data only. Value detected is greater than zero but less than the CRDL.
CRDL - Contract Required Detection Limit
Action levels proposed in Appendix A of 40CFR254.521(a)
Blank Space - Value is below the Method Detection Limit(MDL).
N/A - Not Applicable
(a) - Data reported in ug/kg.

# BACKGROUND INFORMATION
## 187th Fighter Group
## DANNELLY ANG - Montgomery, Alabama [a]

| Client Sample ID | | | B5P-S-0-2 | B5P-S-8.5-10 | B5P-S-23.0-25 | B5P-S-23.0-25D |
|---|---|---|---|---|---|---|
| Lab Sample Number | | | 28909005 | 28909006 | 28909007 | 28909008 |
| Matrix | | | SOIL | SOIL | SOIL | SOIL |
| Sample Date | | | 2/26/91 | 2/26/91 | 2/26/91 | 2/26/91 |
| | CRDL | Action Levels | | | | |
| Semivolatile Compounds | ug/kg | ug/kg | | | | |
| Benzo(k)fluoranthene | 330 | N/A | | | | |
| Benzo(a)pyrene | 330 | N/A | | | | |
| Indeno(1,2,3-cd)Pyrene | 330 | N/A | | | | |
| Dibenz(a,h)Anthracene | 330 | N/A | | | | |
| benzo(g,h,i)perylene | 330 | N/A | | | | |

Notes:

B - Applies to organic data only. Present in the corresponding method blank.
J - Applies to organic data only. Value detected is greater than zero but less than the CRDL.
CRDL - Contract Required Detection Limit
Action levels proposed in Appendix A of 40CFR254.521(a)
Blank Space - Value is below the Method Detection Limit(MDL).
N/A - Not Applicable
(a) - Data reported in ug/kg.

# BACKGROUND INFORMATION
## 187th Fighter Group
## DANNELLY ANG - Montgomery, Alabama [a]

| Client Sample ID | | | | B1P-S-0-2 | B1P-S-8.5-10 | B1P-S-18.5-20 | B1P-S18.5-20D | B3P-S-8.5-10 | B3P-S-13.5-15 | B3P-S-28.5-30 | B5P-S-0-2 |
|---|---|---|---|---|---|---|---|---|---|---|---|
| Lab Sample Number | | | | 28909001 | 28909002 | 28909003 | 28909004 | 28922001 | 28922002 | 28922003 | 28909005 |
| Matrix | | | | SOIL | SOIL | SOIL | SOIL | SOIL | SOIL | SOIL | SOIL |
| Sample Date | | | | 2/26/91 | 33295 | 2/26/91 | 2/26/91 | 2/27/91 | 2/27/91 | 2/27/91 | 2/26/91 |
| | MCL | CRDL | Action Levels | | | | | | | | |
| Inoganics | ug/L | mg/kg | mg/kg/ug/L | | | | | | | | |
| Antimony | 6 | 16.2 | 30/10 | 6.2 B | 3.9 B | 4.0 B | | 2.7 B | 6.1 B | 3.3 B | 4.0 B |
| Arsenic | 50 | 2.7 | 80/50 | 11.2 | 7.1 | 4.5 | | 5.4 | 10 | 7.6 | 4.8 |
| Barium | 2,000 | 54 | 4000/1000 | 51.5 B | 39.8 B | 29.8 B | | 239 | 116 | 31.6 B | 23.2 B |
| Cadmium | 5 | 1.4 | 40/10 | 0.50 B | 0.35 B | 0.43 B | | 0.58 B | 0.56 B | 0.54 B | 0.32 B |
| Chromium | 100 | 2.7 | 400/50 | 54.8 | 15.2 | 15.2 | | 13.7 | 20.4 | 24.9 | 17.9 |
| Copper | 1,300 | 6.8 | 400/200 | 13.3 | 15.4 | 18.7 | | 11.6 | 14.0 | 23.6 | 13.7 |
| Lead | 15 | 0.8 | N/A/50 | 37.1 | 5.4 | 4.8 | | 6.6 | 6.7 | 8.0 | 8.8 |
| Mercury | 2 | 0.05 | 20/2.0 | | | | | | | | |
| Nickel | 100 | 10.8 | 2000/700 | 6.2 B | 15.3 | 15.8 | | 12.8 | 19.4 | 20.0 | 1.9 B |
| Selenium | 50 | 1.4 | N/A/10 | 0.23 B | | 0.65 B | | | 0.22 B | 0.54 B | |
| Silver | N/A | 2.7 | 200/50 | | | | | | | | |
| Thallium | 2 | 2.7 | 6/3 | | | | | | | | 0.23 B |
| Zinc | N/A | 5.4 | 4000/2000 | 45.0 | 43.2 | 46.0 | | 40.0 | 64.4 | 62.5 | 16.6 |

Notes:

B - Value detected is less than the CRDL but greater than or equal to the MDL.
MCL - Maximum Contaminant Level (U.S. Drinking Water Standards)
CRDL - Contract Required Detection Limit
Blank Space - Value is below the Method Detection Limit(MDL).
CRDL expressed in mg/kg={CRDL in ug/L * Digestion Factor(Assuming 200)
* Unit Conversion(1/1000)}/%Solids(Assuming 75%)
N/A - Not Applicable
Action Levels proposed in Appendix A of 40CFR254.521(a)
(b) - Soluble Metals
(a) - Data reported in mg/kg (soil) and ug/L (water).

# BACKGROUND INFORMATION
## 187th Fighter Group
## DANNELLY ANG - Montgomery, Alabama [a]

| Client Sample ID | | | | | B5P-S-8.5-10 | B5P-S-23.0-25 | B5P-S-23.0-25D | BG-MW-6 | BG-2P | BG-2P |
|---|---|---|---|---|---|---|---|---|---|---|
| Lab Sample Number | | | | | 28909006 | 28909007 | 28909008 | 18301002 | 18311002 | 18311003 |
| Matrix | | | | | SOIL | SOIL | SOIL | WATER | WATER | WATER (b) |
| Sample Date | | | | | 2/26/91 | 2/26/91 | 2/26/91 | 4/10/91 | 4/12/91 | 4/12/91 |
| | MCL | CRDL | CRDL | Action Levels | | | | | | |
| Inoganics | ug/L | mg/kg | ug/L | mg/kg/ug/L | | | | | | |
| Antimony | 6 | 16.2 | 60 | 30/10 | 5.3 B | 4.1 B | 4.9 B | | | |
| Arsenic | 50 | 2.7 | 10 | 80/50 | 7.5 | 8.5 | 10.7 | | | |
| Barium | 2,000 | 54 | 200 | 4000/1000 | 123 | 44.4 B | 42.6 B | | | |
| Cadmium | 5 | 1.4 | 5 | 40/10 | 0.78 B | 0.51 B | 0.40 B | | | |
| Chromium | 100 | 2.7 | 10 | 400/50 | 36.6 | 24.2 | 14.4 | | | |
| Copper | 1,300 | 6.8 | 25 | 400/200 | 13.7 | 16.4 | 17.4 | | | |
| Lead | 15 | 0.8 | 3 | N/A/50 | 14.2 | 8.6 | 11.1 | | | |
| Mercury | 2 | 0.05 | 0.2 | 20/2.0 | | | | | | |
| Nickel | 100 | 10.8 | 40 | 2000/700 | 20.4 | 10.1 B | 16.2 | | | |
| Selenium | 50 | 1.4 | 5 | N/A/10 | | 0.58 B | 0.49 B | | | |
| Silver | N/A | 2.7 | 10 | 200/50 | 0.65 B | 0.65 B | 0.65 B | | | |
| Thallium | 2 | 2.7 | 10 | 6/3 | | | | | | |
| Zinc | N/A | 5.4 | 20 | 4000/2000 | 36.2 | 34.6 | 53.0 | | | |

Notes:

B - Value detected is less than the CRDL but greater than or equal to the MDL.
MCL - Maximum Contaminant Level (U.S. Drinking Water Standards)
CRDL - Contract Required Detection Limit
Blank Space - Value is below the Method Detection Limit(MDL).
CRDL expressed in mg/kg={CRDL in ug/L * Digestion Factor(Assuming 200)
* Unit Conversion(1/1000)}/%Solids(Assuming 75%)
N/A - Not Applicable
(b) - Soluble Metals
(a) - Data reported in mg/kg (soil) and ug/L (water).

# SITE 1, POL AREA
## 187th Fighter Group
## DANNELLY ANG - Montgomery, Alabama [a]

| Client Sample ID | | | P1BS-2-4 | P1BS-8-10 | P1BS-8-10D | P1BS-12-14 | P2B-S-2-4 | P2B-S-8-10 | P2B-S-8-10D | P2B-S-12-14 | P3B-S-2-4 |
|---|---|---|---|---|---|---|---|---|---|---|---|
| Lab Sample Number | | | 28998001 | 28998002 | 28998003 | 28998004 | 28934004 | 28934005 | 28934006 | 28934007 | 28934008 |
| Matrix | | | SOIL | SOIL | SOIL | SOIL | SOIL | SOIL | SOIL | SOIL | SOIL |
| Sample Date | | | 3/5/91 | 3/5/91 | 3/5/91 | 3/5/91 | 2/28/91 | 2/28/91 | 2/28/91 | 2/28/91 | 2/28/91 |
| BTEX Compounds | CRDL ug/kg | Action ug/kg ug/L | | | | | | | | | |
| Benzene | 5 | N/A/N/A | | | | | | | | | |
| Ethylbenzene | 5 | 8E+06/4000 | | | | | | | | | |
| Toluene | 5 | 2E+07/10,000 | | | | | | | | | |
| Xylenes(total) | 5 | 2E+08/70,000 | | 7.9 J | | | | | | | |

Notes:

J - Estimated (Exceeded holding time)
MCL - Maximum Contaminant Level (U.S. Drinking Water Standards)
CRDL - Contract Required Detection Limit
Action levels proposed in Appendix A of 40CFR253.521(a)
Blank Space - Value is below the Method Detection Limit(MDL).
N/A - Not Applicable
(a) - Data reported in ug/kg (soil) and ug/L (water).

# SITE 1, POL AREA
## 187th Fighter Group
## DANNELLY ANG - Montgomery, Alabama [a]

| Client Sample ID | | | | | P3B-S-6-8 | P3B-S-12-14 | P4BS-2-4 | P4BS-6-8 | P4BS-12-14 | P5B-S-4-6 | P5B-S-12-14 | P5B-S-8-10 | P5BW1 |
|---|---|---|---|---|---|---|---|---|---|---|---|---|---|
| Lab Sample Number | | | | | 28934009 | 28934010 | 28998011 | 28998012 | 28998013 | 28934011 | 28934013 | 28934012 | 28972001 |
| Matrix | | | | | SOIL | SOIL | SOIL | SOIL | SOIL | SOIL | SOIL | SOIL | WATER |
| Sample Date | | | | | 2/28/91 | 2/28/91 | 3/5/91 | 3/5/91 | 3/5/91 | 2/28/91 | 2/28/91 | 2/28/91 | 3/4/91 |
| | MCL | CRDL | CRDL | Action | | | | | | | | | |
| BTEX Compounds | ug/L | ug/kg | ug/L | ug/kg ug/L | | | | | | | | | |
| Benzene | 5 | 5 | 5 | N/A/N/A | | | | | | | | | 400 |
| Ethylbenzene | 700 | 5 | 5 | 8E+06/4000 | | | 12 | 9.7 | | 3200 | | 340 | 15 |
| Toluene | 1,000 | 5 | 5 | 2E+07/10,000 | | | | | | | | | 120 |
| Xylenes(total) | 10,000 | 5 | 5 | 2E+08/70,000 | | 6.9 | 34 | | | 3000 | | 1100 | 260 |

Notes:

J - Estimated (Exceeded holding time)
MCL - Maximum Contaminant Level (U.S. Drinking Water Standards)
CRDL - Contract Required Detection Limit
Blank Space - Value is below the Method Detection Limit(MDL).
Action levels proposed in Appendix A of 40CFR253.521(a)
N/A - Not Applicable
(a) - Data reported in ug/kg (soil) and ug/L (water).

## SITE 1, POL AREA
## 187th Fighter Group
## DANNELLY ANG - Montgomery, Alabama [a]

| Client Sample ID | | | | | P6BS-6-8 | P6BS-8-10 | P6BS-12-14 | P7BS-6-8 | P7BS-8-10 | P7BS-12-14 | P7BW | P8BS-2-4 | P8BS-6-8 | P8BS-12-14 |
|---|---|---|---|---|---|---|---|---|---|---|---|---|---|---|
| Lab Sample Number | | | | | 28998005 | 28998006 | 28998007 | 28998008 | 28998009 | 28998010 | 29041002 | 28998014 | 28998015 | 28998016 |
| Matrix | | | | | SOIL | SOIL | SOIL | SOIL | SOIL | SOIL | WATER | SOIL | SOIL | SOIL |
| Sample Date | | | | | 3/5/91 | 3/5/91 | 3/5/91 | 3/5/91 | 3/5/91 | 3/5/91 | 3/7/91 | 3/5/91 | 3/5/91 | 3/5/91 |
| | MCL | CRDL | CRDL | Action | | | | | | | | | | |
| BTEX Compounds | ug/L | ug/kg | ug/L | ug/kg ug/L | | | | | | | | | | |
| Benzene | 5 | 5 | 5 | N/A/N/A | | | | | | | | | | |
| Ethylbenzene | 700 | 5 | 5 | 8E+06/4000 | | | | | 4.0 | | | | | |
| Toluene | 1,000 | 5 | 5 | 2E+07/10,000 | | | | | | | | | | |
| Xylenes(total) | 10,000 | 5 | 5 | 2E+08/70,000 | | | | 15 | | | 9.3 | | | |

Notes:
- J - Estimated (Exceeded holding time)
- MCL - Maximum Contaminant Level (U.S. Drinking Water Standards)
- CRDL - Contract Required Detection Limit
- Action levels proposed in Appendix A of 40CFR253.521(a)
- Blank Space - Value is below the Method Detection Limit(MDL).
- N/A - Not Applicable
- (a) - Data reported in ug/kg (soil) and ug/L (water).

# BACKGROUND INFORMATION
## 187th Fighter Group
## DANNELLY ANG - Montgomery, Alabama [a]

| Client Sample ID | B1PS | B3PS | B5PS |
|---|---|---|---|
| Lab Sample Number | 17937 | 17931 | 17937 |
| Matrix | SOIL | SOIL | SOIL |
| Sample Date | 2/26/91 | 2/26/91 | 2/26/91 |
| | | | |
| Total Petroleum Hydrocarbons | | | |
| Sample Depth(Feet) | | | |
| 0-2 | 4.8 | | 10 |
| 8.5-10 | 3.9 | 5.4 | 4.8 |
| 13.5-15 | | 572 | |
| 18.5-20 | 3.6 | | |
| 23-25 | | | 4.2 |
| 28.5-30 | | 28.4 | |

Notes:

Shaded areas indicate depth intervals not sampled.

(a) - Data reported in mg/kg.

# SITE 1, POL AREA
## 187th Fighter Group
## DANNELLY ANG - Montgomery, Alabama [a]

| Client Sample ID | | | P1BS-2-4 | P1BS-8-10 | P1BS-8-10D | P1BS-12-14 | P2B-S-2-4 | P2B-S-8-10 | P2B-S-8-10D |
|---|---|---|---|---|---|---|---|---|---|
| Lab Sample Number | | | 28998001 | 28998002 | 28998003 | 28998004 | 28934004 | 28934005 | 28934006 |
| Matrix | | | SOIL | SOIL | SOIL | SOIL | SOIL | SOIL | SOIL |
| Sample Date | | | 3/5/91 | 3/5/91 | 3/5/91 | 3/5/91 | 2/28/91 | 2/28/91 | 2/28/91 |
| | CRDL | Action | | | | | | | |
| PAH Compounds | ug/kg | Levels | | | | | | | |
| 1-Methylnaphthalene | 330 | N/A | | | | | | | |
| 2-Methylnaphthalene | 330 | N/A | | | | | | | |
| Naphthalene | 330 | N/A | | | | | | | |
| Acenaphthylene | 330 | N/A | | | | | | | |
| Acenaphthene | 330 | N/A | | | | | | | |
| Fluorene | 330 | N/A | | | | | | | |
| Phenanthrene | 330 | N/A | | | | | | | |
| Fluoranthene | 330 | N/A | | | | | | | |
| Pyrene | 330 | N/A | | | | | | | |

Notes:
- J - Estimated (Exceeded holding time)
- CRDL - Contract Required Detection Limit
- Action Levels are proposed in Appendix A of 40CFR252.521(a)
- Blank Space - Value is below the Method Detection Limit(MDL).
- N/A - Not Applicable
- (a) - Data reported in ug/kg (soil) and ug/L (water).

# SITE 1, POL AREA
## 187th Fighter Group
## DANNELLY ANG - Montgomery, Alabama [a]

| Client Sample ID | | | P1BS-2-4 | P1BS-8-10 | P1BS-8-10D | P1BS-12-14 | P2B-S-2-4 | P2B-S-8-10 | P2B-S-8-10D |
|---|---|---|---|---|---|---|---|---|---|
| Lab Sample Number | | | 28998001 | 28998002 | 28998003 | 28998004 | 28934004 | 28934005 | 28934006 |
| Matrix | | | SOIL | SOIL | SOIL | SOIL | SOIL | SOIL | SOIL |
| Sample Date | | | 3/5/91 | 3/5/91 | 3/5/91 | 3/5/91 | 2/28/91 | 2/28/91 | 2/28/91 |
| | CRDL | Action | | | | | | | |
| PAH Compounds | ug/kg | Levels | | | | | | | |
| Benzo(a)anthracene | 330 | N/A | | | | | | | |
| Chrysene | 330 | N/A | | | | | | | |
| Benzo(b)fluoranthene | 330 | N/A | | | | | | | |
| Benzo(k)fluoranthene | 330 | N/A | | | | | | | |
| Benzo(a)pyrene | 330 | N/A | | | | | | | |
| Indeno(1,2,3-cd)pyrene | 330 | N/A | | | | | | | |
| Dibenzo(a,h)anthracene | 330 | N/A | | | | | | | |
| Benzo(g,h,i)perylene | 330 | N/A | | | | | | | |

Notes:
- J - Estimated (Exceeded holding time)
- CRDL - Contract Required Detection Limit
- Blank Space - Value is below the Method Detection Limit(MDL).
- N/A - Not Applicable
- Action Levels are proposed in Appendix A of 40CFR254.521(a)
- (a) - Data reported in ug/kg (soil) and ug/L (water).

# SITE 1, POL AREA
## 187th Fighter Group
## DANNELLY ANG - Montgomery, Alabama [a]

| Client Sample ID | | | P2B-S-12-14 | P3B-S-2-4 | P3B-S-6-8 | P3B-S-12-14 | P4BS-2-4 | P4BS-6-8 | P4BS-12-14 |
|---|---|---|---|---|---|---|---|---|---|
| Lab Sample Number | | | 28934007 | 28934008 | 28934009 | 28934010 | 28998011 | 28998012 | 28998013 |
| Matrix | | | SOIL | SOIL | SOIL | SOIL | SOIL | SOIL | SOIL |
| Sample Date | | | 2/28/91 | 2/28/91 | 2/28/91 | 2/28/91 | 3/5/91 | 3/5/91 | 3/5/91 |
| PAH Compounds | CRDL ug/kg | Action Levels | | | | | | | |
| 1-Methylnaphthalene | 330 | N/A | | | | | | | |
| 2-Methylnaphthalene | 330 | N/A | | | | | | | |
| Naphthalene | 330 | N/A | | | | | | | |
| Acenaphthylene | 330 | N/A | | | | | | | |
| Acenaphthene | 330 | N/A | | | | | | | |
| Fluorene | 330 | N/A | | | | | | | |
| Phenanthrene | 330 | N/A | | | | | | | |
| Fluoranthene | 330 | N/A | | | | | | | |
| Pyrene | 330 | N/A | | | | | | | |

Notes:
J - Estimated (Exceeded holding time)
CRDL - Contract Required Detection Limit
Blank Space - Value is below the Method Detection Limit(MDL).
N/A - Not Applicable
Action Levels are proposed in Appendix A of 40CFR254.521(a)
(a) - Data reported in ug/kg (soil) and ug/L (water).

# SITE 1, POL AREA
## 187th Fighter Group
## DANNELLY ANG - Montgomery, Alabama [a]

| Client Sample ID | | | P1BS-2-4 | P1BS-8-10 | P1BS-8-10D | P1BS-12-14 | P2B-S-2-4 | P2B-S-8-10 | P2B-S-8-10D |
|---|---|---|---|---|---|---|---|---|---|
| Lab Sample Number | | | 28998001 | 28998002 | 28998003 | 28998004 | 28934004 | 28934005 | 28934006 |
| Matrix | | | SOIL | SOIL | SOIL | SOIL | SOIL | SOIL | SOIL |
| Sample Date | | | 3/5/91 | 3/5/91 | 3/5/91 | 3/5/91 | 2/28/91 | 2/28/91 | 2/28/91 |
| | CRDL | Action | | | | | | | |
| PAH Compounds | ug/kg | Levels | | | | | | | |
| Benzo(a)anthracene | 330 | N/A | | | | | | | |
| Chrysene | 330 | N/A | | | | | | | |
| Benzo(b)fluoranthene | 330 | N/A | | | | | | | |
| Benzo(k)fluoranthene | 330 | N/A | | | | | | | |
| Benzo(a)pyrene | 330 | N/A | | | | | | | |
| Indeno(1,2,3-cd)pyrene | 330 | N/A | | | | | | | |
| Dibenzo(a,h)anthracene | 330 | N/A | | | | | | | |
| Benzo(g,h,i)perylene | 330 | N/A | | | | | | | |

Notes:
J - Estimated (Exceeded holding time)
CRDL - Contract Required Detection Limit
Blank Space - Value is below the Method Detection Limit(MDL).
N/A - Not Applicable
Action Levels are proposed in Appendix A of 40CFR254.521(a)
(a) - Data reported in ug/kg (soil) and ug/L (water).

# SITE 1, POL AREA
## 187th Fighter Group
## DANNELLY ANG - Montgomery, Alabama [a]

| Client Sample ID | | | | | P5B-S-4-6 | P5B-S-8-10 | P5B-S-12-14 | P5BW1 | P6BS-6-8 | P6BS-8-10 | P6BS-12-14 |
|---|---|---|---|---|---|---|---|---|---|---|---|
| Lab Sample Number | | | | | 28934011 | 28934012 | 28934013 | 28972001 | 28998005 | 28998006 | 28998007 |
| Matrix | | | | | SOIL | SOIL | SOIL | WATER | SOIL | SOIL | SOIL |
| Sample Date | | | | | 2/28/91 | 2/28/91 | 2/28/91 | 3/4/91 | 3/5/91 | 3/5/91 | 3/5/91 |
| | MCL | CRDL | CRDL | Action | | | | | | | |
| PAH Compounds | ug/L | ug/kg | ug/L | Levels | | | | | | | |
| 1-Methylnaphthalene | N/A | 330 | 10 | N/A | | | | 200 | | | |
| 2-Methylnaphthalene | N/A | 330 | 10 | N/A | | | | 250 | | | |
| Naphthalene | N/A | 330 | 10 | N/A | | | | 87 | | | |
| Acenaphthylene | N/A | 330 | 10 | N/A | | | | | | | |
| Acenaphthene | N/A | 330 | 10 | N/A | | | | | | | |
| Fluorene | N/A | 330 | 10 | N/A | | | | | | | |
| Phenanthrene | N/A | 330 | 10 | N/A | | | | | | | |
| Fluoranthene | N/A | 330 | 10 | N/A | | | | | | | |
| Pyrene | N/.A | 330 | 10 | N/A | | | | | | | |

Notes:
- J - Estimated (Exceeded holding time)
- MCL - Maximum Contaminant Level (U.S. Drinking Water Standards)
- CRDL - Contract Required Detection Limit
- Blank Space - Value is below the Method Detection Limit(MDL).
- N/A - Not Applicable
- Action Levels are proposed in Appendix A of 40CFR254.521(a)
- (a) - Data reported in ug/kg (soil) and ug/L (water).

# SITE 1, POL AREA
## 187th Fighter Group
## DANNELLY ANG - Montgomery, Alabama [a]

| Client Sample ID | | | | | P5B-S-4-6 | P5B-S-8-10 | P5B-S-12-14 | P5BW1 | P6BS-6-8 | P6BS-8-10 | P6BS-12-14 |
|---|---|---|---|---|---|---|---|---|---|---|---|
| Lab Sample Number | | | | | 28934011 | 28934012 | 28934013 | 28972001 | 28998005 | 28998006 | 28998007 |
| Matrix | | | | | SOIL | SOIL | SOIL | WATER | SOIL | SOIL | SOIL |
| Sample Date | | | | | 2/28/91 | 2/28/91 | 2/28/91 | 3/4/91 | 3/5/91 | 3/5/91 | 3/5/91 |
| | MCL | CRDL | CRDL | Action | | | | | | | |
| PAH Compounds | ug/L | ug/kg | ug/L | Levels | | | | | | | |
| Benzo(a)anthracene | 0.1 | 330 | 10 | N/A | | | | | | | |
| Chrysene | 0.2 | 330 | 10 | N/A | | | | | | | |
| Benzo(b)fluoranthene | 0.2 | 330 | 10 | N/A | | | | | | | |
| Benzo(k)fluoranthene | 0.2 | 330 | 10 | N/A | | | | | | | |
| Benzo(a)pyrene | 0.2 | 330 | 10 | N/A | | | | | | | |
| Indeno(1,2,3-cd)pyrene | 0.4 | 330 | 10 | N/A | | | | | | | |
| Dibenzo(a,h)anthracene | 0.3 | 330 | 10 | N/A | | | | | | | |
| Benzo(g,h,i)perylene | N/A | 330 | 10 | N/A | | | | | | | |

Notes:
J - Estimated (Exceeded holding time)
MCL - Maximum Contaminant Level (U.S. Drinking Water Standards)
CRDL - Contract Required Detection Limit
Blank Space - Value is below the Method Detection Limit(MDL).
N/A - Not Applicable
Action Levels are proposed in Appendix A of 40CFR254.521(a)
(a) - Data reported in ug/kg (soil) and ug/L (water).

# SITE 1, POL AREA
## 187th Fighter Group
## DANNELLY ANG - Montgomery, Alabama [a]

| Client Sample ID | | | | | P7BS-6-8 | P7BS-8-10 | P7BS-12-14 | P7BW | P8BS-2-4 | P8BS-6-8 | P8BS-12-14 |
|---|---|---|---|---|---|---|---|---|---|---|---|
| Lab Sample Number | | | | | 28998008 | 28998009 | 28998010 | 29041002 | 28998014 | 28998015 | 28998016 |
| Matrix | | | | | SOIL | SOIL | SOIL | WATER | SOIL | SOIL | SOIL |
| Sample Date | | | | | 3/5/91 | 3/5/91 | 3/5/91 | 3/7/91 | 3/5/91 | 3/5/91 | 3/5/91 |
| | MCL | CRDL | CRDL | Action | | | | | | | |
| PAH Compounds | ug/L | ug/kg | ug/L | Levels | | | | | | | |
| 1-Methylnaphthalene | N/A | 330 | 10 | N/A | | | | 130 | | | |
| 2-Methylnaphthalene | N/A | 330 | 10 | N/A | | | | 7 | | | |
| Naphthalene | N/A | 330 | 10 | N/A | | | | | | | |
| Acenaphthylene | N/A | 330 | 10 | N/A | | | | | | | |
| Acenaphthene | N/A | 330 | 10 | N/A | | | | | | | |
| Fluorene | N/A | 330 | 10 | N/A | | | | | | | |
| Phenanthrene | N/A | 330 | 10 | N/A | | | | | | | |
| Fluoranthene | N/A | 330 | 10 | N/A | | | | | | | |
| Pyrene | N/.A | 330 | 10 | N/A | | | | | | | |

Notes:
- J - Estimated (Exceeded holding time)
- MCL - Maximum Contaminant Level (U.S. Drinking Water Standards)
- CRDL - Contract Required Detection Limit
- Blank Space - Value is below the Method Detection Limit(MDL).
- N/A - Not Applicable
- Action Levels are proposed in Appendix A of 40CFR254.521(a)
- (a) - Data reported in ug/kg (soil) and ug/L (water).

# SITE 1, POL AREA
## 187th Fighter Group
## DANNELLY ANG - Montgomery, Alabama [a]

| Client Sample ID | | | | | P7BS-6-8 | P7BS-8-10 | P7BS-12-14 | P7BW | P8BS-2-4 | P8BS-6-8 | P8BS-12-14 |
|---|---|---|---|---|---|---|---|---|---|---|---|
| Lab Sample Number | | | | | 28998008 | 28998009 | 28998010 | 29041002 | 28998014 | 28998015 | 28998016 |
| Matrix | | | | | SOIL | SOIL | SOIL | WATER | SOIL | SOIL | SOIL |
| Sample Date | | | | | 3/5/91 | 3/5/91 | 3/5/91 | 3/7/91 | 3/5/91 | 3/5/91 | 3/5/91 |
| | MCL | CRDL | CRDL | Action | | | | | | | |
| PAH Compounds | ug/L | ug/kg | ug/L | Levels | | | | | | | |
| Benzo(a)anthracene | 0.1 | 330 | 10 | N/A | | | | | | | |
| Chrysene | 0.2 | 330 | 10 | N/A | | | | | | | |
| Benzo(b)fluoranthene | 0.2 | 330 | 10 | N/A | | | | | | | |
| Benzo(k)fluoranthene | 0.2 | 330 | 10 | N/A | | | | | | | |
| Benzo(a)pyrene | 0.2 | 330 | 10 | N/A | | | | | | | |
| Indeno(1,2,3-cd)pyrene | 0.4 | 330 | 10 | N/A | | | | | | | |
| Dibenzo(a,h)anthracene | 0.3 | 330 | 10 | N/A | | | | | | | |
| Benzo(g,h,i)perylene | N/A | 330 | 10 | N/A | | | | | | | |

Notes:

J - Estimated (Exceeded holding time)
MCL - Maximum Contaminant Level (U.S. Drinking Water Standards)
CRDL - Contract Required Detection Limit
Blank Space - Value is below the Method Detection Limit(MDL).
N/A - Not Applicable
Action Levels are proposed in Appendix A of 40CFR254.521(a)
(a) - Data reported in ug/kg (soil) and ug/L (water).

# SITE 2, OIL WATER SEPARATOR
## 187th Fighter Group
## DANNELLY ANG - Montgomery, Alabama [a]

| Client Sample ID | | | 03BS-12-14 | 03BS-12-14D | 03BS12-14 MS | 03BS12-14 DUP | 04BS-0-2 | 04BS-6-8 | 04BS-14-16 | 04BS-14-16D |
|---|---|---|---|---|---|---|---|---|---|---|
| Lab Sample Number | | | 29017013 | 29017014 | 29017M14 | 29017P14 | 29017001 | 29017002 | 29017003 | 29017004 |
| Matrix | | | SOIL | SOIL | SOIL | SOIL | SOIL | SOIL | SOIL | SOIL |
| Sample Date | | | 3/6/91 | 3/6/91 | 3/6/91 | 3/6/91 | 3/6/91 | 3/6/91 | 3/6/91 | 3/6/91 |
| | CRDL | Action | | | | | | | | |
| Volatile Compounds | ug/kg | Levels | | | | | | | | |
| 1,1,2,2-Tetrachloroethane | 5 | 40,000 | | | | | | | | |
| 1,1-Dichloroethane | 5 | N/A | | | | | | | | 790 |
| 1,1-Dichloroethene | 5 | N/A | | | | | | | | |
| 1,2-Dichloroethene(total) | 5 | 8,000 | 730 J | 660 J | | | | 5400 | 220 J | 960 |
| Acetone | 10 | 8E+06 | 2900 B | 2900 B | | | 5000 BJ | 13000 B | 4800 B | 1800 B |
| Benzene | 5 | N/A | | | | | 1000 J | | | |
| Carbon Disulfide | 5 | 8E+06 | | | | | | | | |
| Ethylbenzene | 5 | 8E+06 | | | | | 11000 | 1300 J | | |
| Methylene Chloride | 5 | 90,000 | 3600 B | 2900 B | | | 9500 B | 7900 B | | |
| Tetrachloroethene | 5 | N/A | | | | | | | 400 J | 1100 |

Notes:

B - Applies to organic data only. Present in the corresponding method blank
J - Applies to organic data only. Value detected is greater than zero but less than the CRDL.
E - Applies to Gas Chromatography/Mass Spectroscopy data only.
Indicate compound above or below linear range of instrument.
CRDL - Contract Required Detection Limit
Action Levels proposed in Appendix A of 40CFR254.521(a)
Blank Space - Value is below the Method Detection Limit(MDL).
N/A - Not Applicable
(a) - Data reported in ug/kg.

# SITE 2, OIL WATER SEPARATOR
## 187th Fighter Group
## DANNELLY ANG - Montgomery, Alabama [a]

| Client Sample ID | | | 03BS-12-14 | 03BS-12-14D | 03BS12-14 MS | 03BS12-14 DUP | 04BS-0-2 | 04BS-6-8 | 04BS-14-16 |
|---|---|---|---|---|---|---|---|---|---|
| Lab Sample Number | | | 29017013 | 29017014 | 29017M14 | 29017P14 | 29017001 | 29017002 | 29017003 |
| Matrix | | | SOIL | SOIL | SOIL | SOIL | SOIL | SOIL | SOIL |
| Sample Date | | | 3/6/91 | 3/6/91 | 3/6/91 | 3/6/91 | 3/6/91 | 3/6/91 | 3/6/91 |
| | CRDL | Action | | | | | | | |
| Volatile Compounds | ug/kg | Levels | | | | | | | |
| Toluene | 5 | 2E+08 | 180 J | | | | 21000 | 5300 | 310 J |
| Trichloroethene | 5 | N/A | 27000 | 10000 | | | | | 33000 |
| Vinyl Chloride | 10 | N/A | | | | | | | |
| Xylene(total) | 5 | 2E+08 | | | | | 89000 | 17000 | |
| Chloromethane | 10 | N/A | | | | | | | |
| Bromomethane | 10 | 100,000 | | | | | | | |
| Chloroethane | 10 | N/A | | | | | | | |
| Chloroform | 5 | 100,000 | | | | | | | |
| 1,2-Dichloroethane | 5 | N/A | | | | | | | |
| 2-Butanone | 10 | N/A | | | | | | | |

Notes:

B - Applies to organic data only. Present in the corresponding method blank
J - Applies to organic data only. Value detected is greater than zero but less than the CRDL.
E - Applies to Gas Chromatography/Mass Spectroscopy data only.
Indicate compound above or below linear range of instrument.
CRDL - Contract Required Detection Limit
Action Levels proposed in Appendix A of 40CFR254.521(a)
Blank Space - Value is below the Method Detection Limit(MDL).
N/A - Not Applicable
(a) - Data reported in ug/kg.

# SITE 2, OIL WATER SEPARATOR
## 187th Fighter Group
## DANNELLY ANG - Montgomery, Alabama [a]

| Client Sample ID | | | 03BS-12-14 | 03BS-12-14D | 03BS12-14 MS | 03BS12-14 DUP | 04BS-0-2 | 04BS-6-8 | 04BS-14-16 |
|---|---|---|---|---|---|---|---|---|---|
| Lab Sample Number | | | 29017013 | 29017014 | 29017M14 | 29017P14 | 29017001 | 29017002 | 29017003 |
| Matrix | | | SOIL | SOIL | SOIL | SOIL | SOIL | SOIL | SOIL |
| Sample Date | | | 3/6/91 | 3/6/91 | 3/6/91 | 3/6/91 | 3/6/91 | 3/6/91 | 3/6/91 |
| | CRDL | Action | | | | | | | |
| Volatile Compounds | ug/kg | Levels | | | | | | | |
| 1,1,1-Trichloroethane | 5 | 7E+06 | | | | | | | |
| Carbon Tetrachloride | 5 | 1,000 | | | | | | | |
| Vinyl Acetate | 10 | N/A | | | | | | | |
| Bromodichloromethane | 5 | 500 | | | | | | | |
| 1,2-Dichloropropane | 5 | N/A | | | | | | | |
| cis-1,3-Dichloropropene | 5 | 20,000 | | | | | | | |
| Dibromochloromethane | 5 | N/A | | | | | | | |
| 1,1,2-Trichloroethane | 5 | 100,000 | | | | | | | |
| trans-1,3-Dichloropropene | 5 | 20,000 | | | | | | | |
| Bromoform | 5 | 2E+06 | | | | | | | |

Notes:

B - Applies to organic data only. Present in the corresponding method blank
J - Applies to organic data only. Value detected is greater than zero but less than the CRDL.
E - Applies to Gas Chromatography/Mass Spectroscopy data only.
Indicate compound above or below linear range of instrument.
CRDL - Contract Required Detection Limit
Action Levels proposed in Appendix A of 40CFR254.521(a)
Blank Space - Value is below the Method Detection Limit(MDL).
N/A - Not Applicable
(a) - Data reported in ug/kg.

# SITE 2, OIL WATER SEPARATOR
## 187th Fighter Group
## DANNELLY ANG - Montgomery, Alabama [a]

| Client Sample ID | | | 03BS-12-14 | 03BS-12-14D | 03BS12-14 MS | 03BS12-14 DUP | 04BS-0-2 | 04BS-6-8 | 04BS-14-16 |
|---|---|---|---|---|---|---|---|---|---|
| Lab Sample Number | | | 29017013 | 29017014 | 29017M14 | 29017P14 | 29017001 | 29017002 | 29017003 |
| Matrix | | | SOIL | SOIL | SOIL | SOIL | SOIL | SOIL | SOIL |
| Sample Date | | | 3/6/91 | 3/6/91 | 3/6/91 | 3/6/91 | 3/6/91 | 3/6/91 | 3/6/91 |
| | CRDL | Action | | | | | | | |
| Volatile Compounds | ug/kg | Levels | | | | | | | |
| 4-Methyl-2-Pentanone | 10 | N/A | | | | | | | |
| 2-Hexanone | 10 | N/A | | | | | | | |
| Chlorobenzene | 5 | 2E+06 | | | | | | | |
| Styrene | 5 | 2E+07 | | | | | | | |

Notes:

B - Applies to organic data only. Present in the corresponding method blank
J - Applies to organic data only. Value detected is greater than zero but less than the CRDL.
E - Applies to Gas Chromatography/Mass Spectroscopy data only.
Indicate compound above or below linear range of instrument.
CRDL - Contract Required Detection Limit
Action Levels proposed in Appendix A of 40CFR254.521(a)
Blank Space - Value is below the Method Detection Limit(MDL).
N/A - Not Applicable
(a) - Data reported in ug/kg.

# SITE 2, OIL WATER SEPARATOR
## 187th Fighter Group
## DANNELLY ANG - Montgomery, Alabama [a]

| Client Sample ID | | | 04BS-14-16D | 05BS-0-2 | 05BS-8-10 | 05BS-12-14 |
|---|---|---|---|---|---|---|
| Lab Sample Number | | | 29017004 | 29017008 | 29017009 | 29017010 |
| Matrix | | | SOIL | SOIL | SOIL | SOIL |
| Sample Date | | | 3/6/91 | 3/6/91 | 3/6/91 | 3/6/91 |
| | CRDL | Action | | | | |
| Volatile Compounds | ug/kg | Levels | | | | |
| 1,1,2,2-Tetrachloroethane | 5 | 40,000 | | | | |
| 1,1-Dichloroethane | 5 | N/A | 790 | | | |
| 1,1-Dichloroethene | 5 | N/A | | | | |
| 1,2-Dichloroethene(total) | 5 | 8,000 | 960 | | 28000 | |
| Acetone | 10 | 8E+06 | 1800 B | 5900 | 2000 | |
| Benzene | 5 | N/A | | 390 J | | |
| Carbon Disulfide | 5 | 8E+06 | | | | |
| Ethylbenzene | 5 | 8E+06 | | 2300 | 220 J | |
| Methylene Chloride | 5 | 90,000 | | 3700 B | 810 J | 2600 B |
| Tetrachloroethene | 5 | N/A | 1100 | | | |

Notes:

B - Applies to organic data only. Present in the corresponding method blank
J - Applies to organic data only. Value detected is greater than zero but less than the CRDL.
E - Applies to Gas Chromatography/Mass Spectroscopy data only.
Indicate compound above or below linear range of instrument.
CRDL - Contract Required Detection Limit
Action Levels proposed in Appendix A of 40CFR254.521(a)
Blank Space - Value is below the Method Detection Limit(MDL).
N/A - Not Applicable
(a) - Data reported in ug/kg.

# SITE 2, OIL WATER SEPARATOR
## 187th Fighter Group
## DANNELLY ANG - Montgomery, Alabama [a]

| Client Sample ID | | | 04BS-14-16D | 05BS-0-2 | 05BS-8-10 | 05BS-12-14 |
|---|---|---|---|---|---|---|
| Lab Sample Number | | | 29017004 | 29017008 | 29017009 | 29017010 |
| Matrix | | | SOIL | SOIL | SOIL | SOIL |
| Sample Date | | | 3/6/91 | 3/6/91 | 3/6/91 | 3/6/91 |
| | CRDL | Action | | | | |
| Volatile Compounds | ug/kg | Levels | | | | |
| Toluene | 5 | 2E+08 | 1100 | 5500 | 640 J | |
| Trichloroethene | 5 | N/A | 65000 E | | 4000 | 13000 |
| Vinyl Chloride | 10 | N/A | | | 1300 J | |
| Xylene(total) | 5 | 2E+08 | 790 J | 17000 | 1200 | |
| Chloromethane | 10 | N/A | | | | |
| Bromomethane | 10 | 100,000 | | | | |
| Chloroethane | 10 | N/A | | | | |
| Chloroform | 5 | 100,000 | | | | |
| 1,2-Dichloroethane | 5 | N/A | | | | |
| 2-Butanone | 10 | N/A | | | | |

Notes:

B - Applies to organic data only. Present in the corresponding method blank
J - Applies to organic data only. Value detected is greater than zero but less than the CRDL.
E - Applies to Gas Chromatography/Mass Spectroscopy data only.
Indicate compound above or below linear range of instrument.
CRDL - Contract Required Detection Limit
Action Levels proposed in Appendix A of 40CFR254.521(a)
Blank Space - Value is below the Method Detection Limit(MDL).
N/A - Not Applicable
(a) - Data reported in ug/kg.

# SITE 2, OIL WATER SEPARATOR
## 187th Fighter Group
## DANNELLY ANG - Montgomery, Alabama [a]

| Client Sample ID | | | 04BS-14-16D | 05BS-0-2 | 05BS-8-10 | 05BS-12-14 |
|---|---|---|---|---|---|---|
| Lab Sample Number | | | 29017004 | 29017008 | 29017009 | 29017010 |
| Matrix | | | SOIL | SOIL | SOIL | SOIL |
| Sample Date | | | 3/6/91 | 3/6/91 | 3/6/91 | 3/6/91 |
| | CRDL | Action | | | | |
| Volatile Compounds | ug/kg | Levels | | | | |
| 1,1,1-Trichloroethane | 5 | 7E+06 | | | | |
| Carbon Tetrachloride | 5 | 1,000 | | | | |
| Vinyl Acetate | 10 | N/A | | | | |
| Bromodichloromethane | 5 | 500 | | | | |
| 1,2-Dichloropropane | 5 | N/A | | | | |
| cis-1,3-Dichloropropene | 5 | 20,000 | | | | |
| Dibromochloromethane | 5 | N/A | | | | |
| 1,1,2-Trichloroethane | 5 | 100,000 | | | | |
| trans-1,3-Dichloropropene | 5 | 20,000 | | | | |
| Bromoform | 5 | 2E+06 | | | | |

Notes:

B - Applies to organic data only. Present in the corresponding method blank
J - Applies to organic data only. Value detected is greater than zero but less than the CRDL.
E - Applies to Gas Chromatography/Mass Spectroscopy data only.
Indicate compound above or below linear range of instrument.
CRDL - Contract Required Detection Limit
Action Levels proposed in Appendix A of 40CFR254.521(a)
Blank Space - Value is below the Method Detection Limit(MDL).
N/A - Not Applicable
(a) - Data reported in ug/kg.

# SITE 2, OIL WATER SEPARATOR
## 187th Fighter Group
## DANNELLY ANG - Montgomery, Alabama [a]

| Client Sample ID | | | 04BS-14-16D | 05BS-0-2 | 05BS-8-10 | 05BS-12-14 |
|---|---|---|---|---|---|---|
| Lab Sample Number | | | 29017004 | 29017008 | 29017009 | 29017010 |
| Matrix | | | SOIL | SOIL | SOIL | SOIL |
| Sample Date | | | 3/6/91 | 3/6/91 | 3/6/91 | 3/6/91 |
| | CRDL | Action | | | | |
| Volatile Compounds | ug/kg | Levels | | | | |
| 4-Methyl-2-Pentanone | 10 | N/A | | | | |
| 2-Hexanone | 10 | N/A | | | | |
| Chlorobenzene | 5 | 2E+06 | | | | |
| Styrene | 5 | 2E+07 | | | | |

Notes:

B - Applies to organic data only. Present in the corresponding method blank
J - Applies to organic data only. Value detected is greater than zero but less than the CRDL.
E - Applies to Gas Chromatography/Mass Spectroscopy data only.
Indicate compound above or below linear range of instrument.
CRDL - Contract Required Detection Limit
Action Levels proposed in Appendix A of 40CFR254.521(a)
Blank Space - Value is below the Method Detection Limit(MDL).
N/A - Not Applicable
(a) - Data reported in ug/kg.

# SITE 2, OIL WATER SEPARATOR
## 187th Fighter Group
## DANNELLY ANG - Montgomery, Alabama [a]

| Client Sample ID | | | 01BS-0-2 | 01BS-10-12 | 01BS-14-16 | 02B-S-0-2 | 02B-S-12-14 | 02B-S-18-20 | 03BS-0-2 | 03BS-6-8 |
|---|---|---|---|---|---|---|---|---|---|---|
| Lab Sample Number | | | 29017005 | 29017006 | 29017007 | 28934001 | 28934002 | 28934003 | 29017011 | 29017012 |
| Matrix | | | SOIL | SOIL | SOIL | SOIL | SOIL | SOIL | SOIL | SOIL |
| Sample Date | | | 3/6/91 | 3/6/91 | 3/6/91 | 2/28/91 | 2/28/91 | 2/28/91 | 3/6/91 | 3/6/91 |
| Volatile Compounds | CRDL ug/kg | Action Levels | | | | | | | | |
| 1,1,2,2-Tetrachloroethane | 5 | 40,000 | | | 1600 | | | | | |
| 1,1-Dichloroethane | 5 | N/A | | 1 J | | | | | | |
| 1,1-Dichloroethene | 5 | N/A | | | | | | 24 J | | |
| 1,2-Dichloroethene(total) | 5 | 8,000 | | 180 | 1500 | | 150 | 1000 | 700 | 830 |
| Acetone | 10 | 8E+06 | 53 | 19 B | 1900 B | | 17 B | 100 B | 30 BJ | 1900 |
| Benzene | 5 | N/A | 3 J | | | | | | | |
| Carbon Disulfide | 5 | 8E+06 | | | | | | 18 J | | |
| Ethylbenzene | 5 | 8E+06 | 15 | | | | | | | |
| Methylene Chloride | 5 | 90,000 | 14 B | 11 B | 2000 | 13 B | 21 B | 120 B | 51 B | 1300 J |
| Tetrachloroethene | 5 | N/A | | | 450 J | | | | | |

Notes:

B - Applies to organic data only. Present in the corresponding method blank
J - Applies to organic data only. Value detected is greater than zero but less than the CRDL.
E - Applies to Gas Chromatography/Mass Spectroscopy data only.
Indicate compound above or below linear range of instrument.
CRDL - Contract Required Detection Limit
Action Levels proposed in Appendix A of 40CFR254.521(a)
Blank Space - Value is below the Method Detection Limit(MDL).
N/A - Not Applicable
(a) - Data reported in ug/kg.

# SITE 2, OIL WATER SEPARATOR
## 187th Fighter Group
## DANNELLY ANG - Montgomery, Alabama [a]

| Client Sample ID | | | 01BS-0-2 | 01BS-10-12 | 01BS-14-16 | 02B-S-0-2 | 02B-S-12-14 | 02B-S-18-20 | 03BS-0-2 | 03BS-6-8 |
|---|---|---|---|---|---|---|---|---|---|---|
| Lab Sample Number | | | 29017005 | 29017006 | 29017007 | 28934001 | 28934002 | 28934003 | 29017011 | 29017012 |
| Matrix | | | SOIL | SOIL | SOIL | SOIL | SOIL | SOIL | SOIL | SOIL |
| Sample Date | | | 3/6/91 | 3/6/91 | 3/6/91 | 2/28/91 | 2/28/91 | 2/28/91 | 3/6/91 | 3/6/91 |
| | CRDL | Action | | | | | | | | |
| Volatile Compounds | ug/kg | Levels | | | | | | | | |
| 1,1,1-Trichloroethane | 5 | 7E+06 | | | | | | | | |
| Carbon Tetrachloride | 5 | 1,000 | | | | | | | | |
| Vinyl Acetate | 10 | N/A | | | | | | | | |
| Bromodichloromethane | 5 | 500 | | | | | | | | |
| 1,2-Dichloropropane | 5 | N/A | | | | | | | | |
| cis-1,3-Dichloropropene | 5 | 20,000 | | | | | | | | |
| Dibromochloromethane | 5 | N/A | | | | | | | | |
| 1,1,2-Trichloroethane | 5 | 100,000 | | | | | | | | |
| trans-1,3-Dichloropropene | 5 | 20,000 | | | | | | | | |
| Bromoform | 5 | 2E+06 | | | | | | | | |

Notes:

B - Applies to organic data only. Present in the corresponding method blank
J - Applies to organic data only. Value detected is greater than zero but less than the CRDL.
E - Applies to Gas Chromatography/Mass Spectroscopy data only.
Indicate compound above or below linear range of instrument.
CRDL - Contract Required Detection Limit
Action Levels proposed in Appendix A of 40CFR254.521(a)
Blank Space - Value is below the Method Detection Limit(MDL).
N/A - Not Applicable
(a) - Data reported in ug/kg.

# SITE 2, OIL WATER SEPARATOR
## 187th Fighter Group
## DANNELLY ANG - Montgomery, Alabama [a]

| Client Sample ID | | | 01BS-0-2 | 01BS-10-12 | 01BS-14-16 | 02B-S-0-2 | 02B-S-12-14 | 02B-S-18-20 | 03BS-0-2 | 03BS-6-8 |
|---|---|---|---|---|---|---|---|---|---|---|
| Lab Sample Number | | | 29017005 | 29017006 | 29017007 | 28934001 | 28934002 | 28934003 | 29017011 | 29017012 |
| Matrix | | | SOIL | SOIL | SOIL | SOIL | SOIL | SOIL | SOIL | SOIL |
| Sample Date | | | 3/6/91 | 3/6/91 | 3/6/91 | 2/28/91 | 2/28/91 | 2/28/91 | 3/6/91 | 3/6/91 |
| Volatile Compounds | CRDL ug/kg | Action Levels | | | | | | | | |
| 4-Methyl-2-Pentanone | 10 | N/A | | | | | | | | |
| 2-Hexanone | 10 | N/A | | | | | | | | |
| Chlorobenzene | 5 | 2E+06 | | | | | | | | |
| Styrene | 5 | 2E+07 | | | | | | | | |

Notes:

B - Applies to organic data only. Present in the corresponding method blank
J - Applies to organic data only. Value detected is greater than zero but less than the CRDL.
E - Applies to Gas Chromatography/Mass Spectroscopy data only.
Indicate compound above or below linear range of instrument.
CRDL - Contract Required Detection Limit
Action Levels proposed in Appendix A of 40CFR254.521(a)
Blank Space - Value is below the Method Detection Limit(MDL).
N/A - Not Applicable
(a) - Data reported in ug/kg.

# SITE 2, OIL WATER SEPARATOR
## 187th Fighter Group
## DANNELLY ANG - Montgomery, Alabama [a]

| Client Sample ID | | | 01BS-0-2 | 01BS-10-12 | 01BS-14-16 | 02B-S-0-2 | 02B-S-12-14 | 02B-S-18-20 | 03BS-0-2 | 03BS-6-8 |
|---|---|---|---|---|---|---|---|---|---|---|
| Lab Sample Number | | | 29017005 | 29017006 | 29017007 | 28934001 | 28934002 | 28934003 | 29017011 | 29017012 |
| Matrix | | | SOIL | SOIL | SOIL | SOIL | SOIL | SOIL | SOIL | SOIL |
| Sample Date | | | 3/6/91 | 3/6/91 | 3/6/91 | 2/28/91 | 2/28/91 | 2/28/91 | 3/6/91 | 3/6/91 |
| | CRDL | Action | | | | | | | | |
| Semivolatile Compounds | ug/kg | Levels (ug/kg) | | | | | | | | |
| 2-Methylnaphthalene | 330 | N/A | | | | | | | | |
| Anthracene | 330 | N/A | | | | | 120 J | | | |
| Benzo(a)anthracene | 330 | N/A | | | | 69 J | 770 | | | |
| Benzo(a)pyrene | 330 | N/A | | | | 75 J | 660 | | | |
| Benzo(b)fluoranthene | 330 | N/A | | | | 96 J | 690 | | | |
| Benzo(g,h,i)perylene | 330 | N/A | | | | 60 J | 440 | | | |
| Benzo(k)fluoranthene | 330 | N/A | | | | 94 J | 760 | | | |
| Benzoic Acid | 1600 | N/A | | | | | | | | |
| Chrysene | 330 | N/A | | | | 94 J | 780 | | | |
| Di-n-butylphthalate | 330 | 8E+06 | | | | 42 J | | | | |

Notes:

B - Applies to organic data only. Present in the corresponding method blank
J - Applies to organic data only. Value detected is greater than zero but less than the CRDL.
E - Applies to Gas Chromatography/Mass Spectroscopy data only.
Indicate compound above or below linear range of instrument.
CRDL - Contract Required Detection Limit
Action Levels proposed in Appendix A of 40CFR254.521(a)
Blank Space - Value is below the Method Detection Limit(MDL).
N/A - Not Applicable
(a) - Data reported in ug/kg.

# SITE 2, OIL WATER SEPARATOR
## 187th Fighter Group
## DANNELLY ANG - Montgomery, Alabama [a]

| Client Sample ID | | | 01BS-0-2 | 01BS-10-12 | 01BS-14-16 | 02B-S-0-2 | 02B-S-12-14 | 02B-S-18-20 | 03BS-0-2 | 03BS-6-8 |
|---|---|---|---|---|---|---|---|---|---|---|
| Lab Sample Number | | | 29017005 | 29017006 | 29017007 | 28934001 | 28934002 | 28934003 | 29017011 | 29017012 |
| Matrix | | | SOIL | SOIL | SOIL | SOIL | SOIL | SOIL | SOIL | SOIL |
| Sample Date | | | 3/6/91 | 3/6/91 | 3/6/91 | 2/28/91 | 2/28/91 | 2/28/91 | 3/6/91 | 3/6/91 |
| Semivolatile Compounds | CRDL ug/kg | Action Levels (ug/kg) | | | | | | | | |
| Dibenz(a,h)anthracene | 330 | N/A | | | | | 120 J | | | |
| Fluoranthene | 330 | N/A | | | | 140 J | 1600 | | | |
| Fluorene | 330 | N/A | | | | | | | | |
| Indeno(1,2,3-cd)pyrene | 330 | N/A | | | | 56 J | 400 J | | | |
| N-Nitrosodiphenylamine | 330 | 100,000 | | | | | 43 J | | | |
| Naphthalene | 330 | N/A | | | | | | | | |
| Nitrobenzene | 330 | 40,000 | | | | | | | | |
| Phenanthrene | 330 | N/A | | | | | 510 | | | |
| Pyrene | 330 | N/A | | | | 110 J | 1200 | | | |
| Bis(2-Ethylhexyl)phthalate | 330 | 50,000 | 310 BJ | 2900 B | 1000 B | 3000 B | 2800 B | 1900 B | 440 B | 3900 B |

Notes:

B - Applies to organic data only. Present in the corresponding method blank
J - Applies to organic data only. Value detected is greater than zero but less than the CRDL.
E - Applies to Gas Chromatography/Mass Spectroscopy data only.
Indicate compound above or below linear range of instrument.
CRDL - Contract Required Detection Limit
Action Levels proposed in Appendix A of 40CFR254.521(a)
Blank Space - Value is below the Method Detection Limit(MDL).
N/A - Not Applicable
(a) - Data reported in ug/kg.

# SITE 2, OIL WATER SEPARATOR
## 187th Fighter Group
## DANNELLY ANG - Montgomery, Alabama [a]

| Client Sample ID | | | 01BS-0-2 | 01BS-10-12 | 01BS-14-16 | 02B-S-0-2 | 02B-S-12-14 | 02B-S-18-20 | 03BS-0-2 | 03BS-6-8 |
|---|---|---|---|---|---|---|---|---|---|---|
| Lab Sample Number | | | 29017005 | 29017006 | 29017007 | 28934001 | 28934002 | 28934003 | 29017011 | 29017012 |
| Matrix | | | SOIL | SOIL | SOIL | SOIL | SOIL | SOIL | SOIL | SOIL |
| Sample Date | | | 3/6/91 | 3/6/91 | 3/6/91 | 2/28/91 | 2/28/91 | 2/28/91 | 3/6/91 | 3/6/91 |
| | CRDL | Action | | | | | | | | |
| Semivolatile Compounds | ug/kg | Levels (ug/kg) | | | | | | | | |
| Phenol | 330 | 5E+07 | | | | | | | | |
| bis(2-Chloroethyl)Ether | 330 | N/A | | | | | | | | |
| 2-Chlorophenol | 330 | 400,000 | | | | | | | | |
| 1,3-Dichlorobenzene | 330 | N/A | | | | | | | | |
| 1,4-Dichlorobenzene | 330 | N/A | | | | | | | | |
| Benzyl Alcohol | 330 | N/A | | | | | | | | |
| 1,2-Dichlorobenzene | 330 | N/A | | | | | | | | |
| 2-Methylphenol | 330 | N/A | | | | | | | | |
| bis(2-Chloroisopropyl)Ether | 330 | N/A | | | | | | | | |
| 4-Methylphenol | 330 | N/A | | | | | | | | |

Notes:

B - Applies to organic data only. Present in the corresponding method blank
J - Applies to organic data only. Value detected is greater than zero but less than the CRDL.
E - Applies to Gas Chromatography/Mass Spectroscopy data only.
Indicate compound above or below linear range of instrument.
CRDL - Contract Required Detection Limit
Action Levels proposed in Appendix A of 40CFR254.521(a)
Blank Space - Value is below the Method Detection Limit(MDL).
N/A - Not Applicable
(a) - Data reported in ug/kg.

# SITE 2, OIL WATER SEPARATOR
## 187th Fighter Group
## DANNELLY ANG - Montgomery, Alabama [a]

| Client Sample ID | | | 01BS-0-2 | 01BS-10-12 | 01BS-14-16 | 02B-S-0-2 | 02B-S-12-14 | 02B-S-18-20 | 03BS-0-2 | 03BS-6-8 |
|---|---|---|---|---|---|---|---|---|---|---|
| Lab Sample Number | | | 29017005 | 29017006 | 29017007 | 28934001 | 28934002 | 28934003 | 29017011 | 29017012 |
| Matrix | | | SOIL | SOIL | SOIL | SOIL | SOIL | SOIL | SOIL | SOIL |
| Sample Date | | | 3/6/91 | 3/6/91 | 3/6/91 | 2/28/91 | 2/28/91 | 2/28/91 | 3/6/91 | 3/6/91 |
| Semivolatile Compounds | CRDL ug/kg | Action Levels (ug/kg) | | | | | | | | |
| N-Nitroso-di-n-propylamine | 330 | 100 | | | | | | | | |
| Hexachloroethane | 330 | 80,000 | | | | | | | | |
| Isophorone | 330 | 2E+06 | | | | | | | | |
| 2-Nitrophenol | 330 | N/A | | | | | | | | |
| 2,4-Dimethylphenol | 330 | N/A | | | | | | | | |
| bis(2-Chloroethoxy)Methane | 330 | N/A | | | | | | | | |
| 2,4-Dichlorophenol | 330 | 200,000 | | | | | | | | |
| 1,2,4-Trichlorobenzene | 330 | 2E+06 | | | | | | | | |
| 4-Chloroaniline | 330 | N/A | | | | | | | | |
| Hexachlorobutadiene | 330 | 90,000 | | | | | | | | |

Notes:

B - Applies to organic data only. Present in the corresponding method blank
J - Applies to organic data only. Value detected is greater than zero but less than the CRDL.
E - Applies to Gas Chromatography/Mass Spectroscopy data only.
Indicate compound above or below linear range of instrument.
CRDL - Contract Required Detection Limit
Action Levels proposed in Appendix A of 40CFR254.521(a)
Blank Space - Value is below the Method Detection Limit(MDL).
N/A - Not Applicable
(a) - Data reported in ug/kg.

# SITE 2, OIL WATER SEPARATOR
## 187th Fighter Group
## DANNELLY ANG - Montgomery, Alabama [a]

| Client Sample ID | | | 01BS-0-2 | 01BS-10-12 | 01BS-14-16 | 02B-S-0-2 | 02B-S-12-14 | 02B-S-18-20 | 03BS-0-2 | 03BS-6-8 |
|---|---|---|---|---|---|---|---|---|---|---|
| Lab Sample Number | | | 29017005 | 29017006 | 29017007 | 28934001 | 28934002 | 28934003 | 29017011 | 29017012 |
| Matrix | | | SOIL | SOIL | SOIL | SOIL | SOIL | SOIL | SOIL | SOIL |
| Sample Date | | | 3/6/91 | 3/6/91 | 3/6/91 | 2/28/91 | 2/28/91 | 2/28/91 | 3/6/91 | 3/6/91 |
| | CRDL | Action | | | | | | | | |
| Semivolatile Compounds | ug/kg | Levels (ug/kg) | | | | | | | | |
| 4-Chloro-3-methylphenol | 330 | N/A | | | | | | | | |
| Hexachlorocyclopentadiene | 330 | 600,000 | | | | | | | | |
| 2,4,6-Trichlorophenol | 330 | 40,000 | | | | | | | | |
| 2,4,5-Trichlorophenol | 1600 | 8E+06 | | | | | | | | |
| 2-Chloronaphthalene | 330 | N/A | | | | | | | | |
| 2-Nitroaniline | 1600 | N/A | | | | | | | | |
| Dimethyl Phthalate | 330 | N/A | | | | | | | | |
| Acenaphthylene | 330 | N/A | | | | | | | | |
| 2,6-Dinitrotoluene | 330 | 1,000 | | | | | | | | |
| 3-Nitroaniline | 1600 | N/A | | | | | | | | |

Notes:

B - Applies to organic data only. Present in the corresponding method blank
J - Applies to organic data only. Value detected is greater than zero but less than the CRDL.
E - Applies to Gas Chromatography/Mass Spectroscopy data only.
Indicate compound above or below linear range of instrument.
CRDL - Contract Required Detection Limit
Action Levels proposed in Appendix A of 40CFR254.521(a)
Blank Space - Value is below the Method Detection Limit(MDL).
N/A - Not Applicable
(a) - Data reported in ug/kg.

# SITE 2, OIL WATER SEPARATOR
## 187th Fighter Group
## DANNELLY ANG - Montgomery, Alabama [a]

| Client Sample ID | | | 01BS-0-2 | 01BS-10-12 | 01BS-14-16 | 02B-S-0-2 | 02B-S-12-14 | 02B-S-18-20 | 03BS-0-2 | 03BS-6-8 |
|---|---|---|---|---|---|---|---|---|---|---|
| Lab Sample Number | | | 29017005 | 29017006 | 29017007 | 28934001 | 28934002 | 28934003 | 29017011 | 29017012 |
| Matrix | | | SOIL | SOIL | SOIL | SOIL | SOIL | SOIL | SOIL | SOIL |
| Sample Date | | | 3/6/91 | 3/6/91 | 3/6/91 | 2/28/91 | 2/28/91 | 2/28/91 | 3/6/91 | 3/6/91 |
| Semivolatile Compounds | CRDL ug/kg | Action Levels (ug/kg) | | | | | | | | |
| Acenaphthene | 330 | N/A | | | | | | | | |
| 2,4-Dintrophenol | 1600 | 200,000 | | | | | | | | |
| 4-Nitrophenol | 1600 | N/A | | | | | | | | |
| Dibenzofuran | 330 | N/A | | | | | | | | |
| 2,4-Dinitrotoluene | 330 | N/A | | | | | | | | |
| Diethylphthalate | 330 | 6E+07 | | | | | | | | |
| 4-Chlorophenyl-phenylether | 330 | N/A | | | | | | | | |
| 4-Nitroaniline | 1600 | N/A | | | | | | | | |
| 4,6-Dinitro-2-methylphenol | 1600 | N/A | | | | | | | | |
| 4-Bromophenyl-phenylether | 330 | N/A | | | | | | | | |

Notes:

B - Applies to organic data only. Present in the corresponding method blank
J - Applies to organic data only. Value detected is greater than zero but less than the CRDL.
E - Applies to Gas Chromatography/Mass Spectroscopy data only.
Indicate compound above or below linear range of instrument.
CRDL - Contract Required Detection Limit
Action Levels proposed in Appendix A of 40CFR254.521(a)
Blank Space - Value is below the Method Detection Limit(MDL).
N/A - Not Applicable
(a) - Data reported in ug/kg.

# SITE 2, OIL WATER SEPARATOR
## 187th Fighter Group
## DANNELLY ANG - Montgomery, Alabama[a]

| Client Sample ID | | | 01BS-0-2 | 01BS-10-12 | 01BS-14-16 | 02B-S-0-2 | 02B-S-12-14 | 02B-S-18-20 | 03BS-0-2 | 03BS-6-8 |
|---|---|---|---|---|---|---|---|---|---|---|
| Lab Sample Number | | | 29017005 | 29017006 | 29017007 | 28934001 | 28934002 | 28934003 | 29017011 | 29017012 |
| Matrix | | | SOIL | SOIL | SOIL | SOIL | SOIL | SOIL | SOIL | SOIL |
| Sample Date | | | 3/6/91 | 3/6/91 | 3/6/91 | 2/28/91 | 2/28/91 | 2/28/91 | 3/6/91 | 3/6/91 |
| | CRDL | Action | | | | | | | | |
| Semivolatile Compounds | ug/kg | Levels (ug/kg) | | | | | | | | |
| Hexachlorobenzene | 330 | N/A | | | | | | | | |
| Pentachlorophenol | 1600 | 2E+06 | | | | | | | | |
| Butylbenzylphthalate | 330 | 2E+07 | | | | | | | | |
| 3,3'-Dichlorobenzidine | 660 | 2,000 | | | | | | | | |
| Di-n-octylphthalate | 330 | N/A | | | | | | | | |

Notes:

B - Applies to organic data only. Present in the corresponding method blank
J - Applies to organic data only. Value detected is greater than zero but less than the CRDL.
E - Applies to Gas Chromatography/Mass Spectroscopy data only.
Indicate compound above or below linear range of instrument.
CRDL - Contract Required Detection Limit
Action Levels proposed in Appendix A of 40CFR254.521(a)
Blank Space - Value is below the Method Detection Limit(MDL).
N/A - Not Applicable
(a) - Data reported in ug/kg.

# SITE 2, OIL WATER SEPARATOR
## 187th Fighter Group
## DANNELLY ANG - Montgomery, Alabama [a]

| Client Sample ID | | | 03BS-12-14 | 03BS-12-14D | 03BS12-14 MS | 03BS12-14 DUP | 04BS-0-2 | 04BS-6-8 | 04BS-14-16 |
|---|---|---|---|---|---|---|---|---|---|
| Lab Sample Number | | | 29017013 | 29017014 | 29017M14 | 29017P14 | 29017001 | 29017002 | 29017003 |
| Matrix | | | SOIL | SOIL | SOIL | SOIL | SOIL | SOIL | SOIL |
| Sample Date | | | 3/6/91 | 3/6/91 | 3/6/91 | 3/6/91 | 3/6/91 | 3/6/91 | 3/6/91 |
| Semivolatile Compounds | CRDL ug/kg | Action Levels (ug/kg) | | | | | | | |
| 2-Methylnaphthalene | 330 | N/A | | | | | 4100 | 43 J | 170 J |
| Anthracene | 330 | N/A | | | | | | | |
| Benzo(a)anthracene | 330 | N/A | | | | | | | |
| Benzo(a)pyrene | 330 | N/A | | | | | | | |
| Benzo(b)fluoranthene | 330 | N/A | | | | | | | |
| Benzo(g,h,i)perylene | 330 | N/A | | | | | | | |
| Benzo(k)fluoranthene | 330 | N/A | | | | | | | |
| Benzoic Acid | 1600 | N/A | | | | | | | |
| Chrysene | 330 | N/A | | | | | | | |
| Di-n-butylphthalate | 330 | 8E+06 | | | | | | 50 J | 48 J |

Notes:

B - Applies to organic data only. Present in the corresponding method blank
J - Applies to organic data only. Value detected is greater than zero but less than the CRDL.
E - Applies to Gas Chromatography/Mass Spectroscopy data only.
Indicate compound above or below linear range of instrument.
CRDL - Contract Required Detection Limit
Action Levels proposed in Appendix A of 40CFR254.521(a)
Blank Space - Value is below the Method Detection Limit(MDL).
N/A - Not Applicable
(a) - Data reported in ug/kg.

# SITE 2, OIL WATER SEPARATOR
## 187th Fighter Group
## DANNELLY ANG - Montgomery, Alabama [a]

| Client Sample ID | | | 03BS-12-14 | 03BS-12-14D | 03BS12-14 MS | 03BS12-14 DUP | 04BS-0-2 | 04BS-6-8 | 04BS-14-16 |
|---|---|---|---|---|---|---|---|---|---|
| Lab Sample Number | | | 29017013 | 29017014 | 29017M14 | 29017P14 | 29017001 | 29017002 | 29017003 |
| Matrix | | | SOIL | SOIL | SOIL | SOIL | SOIL | SOIL | SOIL |
| Sample Date | | | 3/6/91 | 3/6/91 | 3/6/91 | 3/6/91 | 3/6/91 | 3/6/91 | 3/6/91 |
| | CRDL | Action | | | | | | | |
| Semivolatile Compounds | ug/kg | Levels (ug/kg) | | | | | | | |
| Dibenz(a,h)anthracene | 330 | N/A | | | | | | | |
| Fluoranthene | 330 | N/A | | | | | | | |
| Fluorene | 330 | N/A | | | | | 100 J | | |
| Indeno(1,2,3-cd)pyrene | 330 | N/A | | | | | | | |
| N-Nitrosodiphenylamine | 330 | 100,000 | | | | | 94 J | | |
| Naphthalene | 330 | N/A | 48 J | 48 J | | | 8800 E | 60 J | 340 J |
| Nitrobenzene | 330 | 40,000 | | | | | 270 J | | |
| Phenanthrene | 330 | N/A | | | | | 110 J | | |
| Pyrene | 330 | N/A | | | | | 44 J | | |
| Bis(2-Ethylhexyl)phthalate | 330 | 50,000 | 270 BJ | 320 BJ | | | 540 B | 820 B | 1500 B |

Notes:

B - Applies to organic data only. Present in the corresponding method blank
J - Applies to organic data only. Value detected is greater than zero but less than the CRDL.
E - Applies to Gas Chromatography/Mass Spectroscopy data only.
Indicate compound above or below linear range of instrument.
CRDL - Contract Required Detection Limit
Action Levels proposed in Appendix A of 40CFR254.521(a)
Blank Space - Value is below the Method Detection Limit(MDL).
N/A - Not Applicable
(a) - Data reported in ug/kg.

# SITE 2, OIL WATER SEPARATOR
## 187th Fighter Group
## DANNELLY ANG - Montgomery, Alabama [a]

| Client Sample ID | | | 03BS-12-14 | 03BS-12-14D | 03BS12-14 MS | 03BS12-14 DUP | 04BS-0-2 | 04BS-6-8 | 04BS-14-16 |
|---|---|---|---|---|---|---|---|---|---|
| Lab Sample Number | | | 29017013 | 29017014 | 29017M14 | 29017P14 | 29017001 | 29017002 | 29017003 |
| Matrix | | | SOIL | SOIL | SOIL | SOIL | SOIL | SOIL | SOIL |
| Sample Date | | | 3/6/91 | 3/6/91 | 3/6/91 | 3/6/91 | 3/6/91 | 3/6/91 | 3/6/91 |
| | CRDL | Action | | | | | | | |
| Semivolatile Compounds | ug/kg | Levels (ug/kg) | | | | | | | |
| Phenol | 330 | 5E+07 | | | | | | | |
| bis(2-Chloroethyl)Ether | 330 | N/A | | | | | | | |
| 2-Chlorophenol | 330 | 400,000 | | | | | | | |
| 1,3-Dichlorobenzene | 330 | N/A | | | | | | | |
| 1,4-Dichlorobenzene | 330 | N/A | | | | | | | |
| Benzyl Alcohol | 330 | N/A | | | | | | | |
| 1,2-Dichlorobenzene | 330 | N/A | | | | | | | |
| 2-Methylphenol | 330 | N/A | | | | | | | |
| bis(2-Chloroisopropyl)Ether | 330 | N/A | | | | | | | |
| 4-Methylphenol | 330 | N/A | | | | | | | |

Notes:

B - Applies to organic data only. Present in the corresponding method blank
J - Applies to organic data only. Value detected is greater than zero but less than the CRDL.
E - Applies to Gas Chromatography/Mass Spectroscopy data only.
Indicate compound above or below linear range of instrument.
CRDL - Contract Required Detection Limit
Action Levels proposed in Appendix A of 40CFR254.521(a)
Blank Space - Value is below the Method Detection Limit(MDL).
N/A - Not Applicable
(a) - Data reported in ug/kg.

# SITE 2, OIL WATER SEPARATOR
## 187th Fighter Group
## DANNELLY ANG - Montgomery, Alabama [a]

| Client Sample ID | | | 03BS-12-14 | 03BS-12-14D | 03BS12-14 MS | 03BS12-14 DUP | 04BS-0-2 | 04BS-6-8 | 04BS-14-16 |
|---|---|---|---|---|---|---|---|---|---|
| Lab Sample Number | | | 29017013 | 29017014 | 29017M14 | 29017P14 | 29017001 | 29017002 | 29017003 |
| Matrix | | | SOIL | SOIL | SOIL | SOIL | SOIL | SOIL | SOIL |
| Sample Date | | | 3/6/91 | 3/6/91 | 3/6/91 | 3/6/91 | 3/6/91 | 3/6/91 | 3/6/91 |
| | CRDL | Action | | | | | | | |
| Semivolatile Compounds | ug/kg | Levels (ug/kg) | | | | | | | |
| N-Nitroso-di-n-propylamine | 330 | 100 | | | | | | | |
| Hexachloroethane | 330 | 80,000 | | | | | | | |
| Isophorone | 330 | 2E+06 | | | | | | | |
| 2-Nitrophenol | 330 | N/A | | | | | | | |
| 2,4-Dimethylphenol | 330 | N/A | | | | | | | |
| bis(2-Chloroethoxy)Methane | 330 | N/A | | | | | | | |
| 2,4-Dichlorophenol | 330 | 200,000 | | | | | | | |
| 1,2,4-Trichlorobenzene | 330 | 2E+06 | | | | | | | |
| 4-Chloroaniline | 330 | N/A | | | | | | | |
| Hexachlorobutadiene | 330 | 90,000 | | | | | | | |

Notes:

B - Applies to organic data only. Present in the corresponding method blank
J - Applies to organic data only. Value detected is greater than zero but less than the CRDL.
E - Applies to Gas Chromatography/Mass Spectroscopy data only.
Indicate compound above or below linear range of instrument.
CRDL - Contract Required Detection Limit
Action Levels proposed in Appendix A of 40CFR254.521(a)
Blank Space - Value is below the Method Detection Limit(MDL).
N/A - Not Applicable
(a) - Data reported in ug/kg.

# SITE 2, OIL WATER SEPARATOR
## 187th Fighter Group
## DANNELLY ANG - Montgomery, Alabama [a]

| Client Sample ID | | | 03BS-12-14 | 03BS-12-14D | 03BS12-14 MS | 03BS12-14 DUP | 04BS-0-2 | 04BS-6-8 | 04BS-14-16 |
|---|---|---|---|---|---|---|---|---|---|
| Lab Sample Number | | | 29017013 | 29017014 | 29017M14 | 29017P14 | 29017001 | 29017002 | 29017003 |
| Matrix | | | SOIL | SOIL | SOIL | SOIL | SOIL | SOIL | SOIL |
| Sample Date | | | 3/6/91 | 3/6/91 | 3/6/91 | 3/6/91 | 3/6/91 | 3/6/91 | 3/6/91 |
| Semivolatile Compounds | CRDL ug/kg | Action Levels (ug/kg) | | | | | | | |
| 4-Chloro-3-methylphenol | 330 | N/A | | | | | | | |
| Hexachlorocyclopentadiene | 330 | 600,000 | | | | | | | |
| 2,4,6-Trichlorophenol | 330 | 40,000 | | | | | | | |
| 2,4,5-Trichlorophenol | 1600 | 8E+06 | | | | | | | |
| 2-Chloronaphthalene | 330 | N/A | | | | | | | |
| 2-Nitroaniline | 1600 | N/A | | | | | | | |
| Dimethyl Phthalate | 330 | N/A | | | | | | | |
| Acenaphthylene | 330 | N/A | | | | | | | |
| 2,6-Dinitrotoluene | 330 | 1,000 | | | | | | | |
| 3-Nitroaniline | 1600 | N/A | | | | | | | |

Notes:

B - Applies to organic data only. Present in the corresponding method blank
J - Applies to organic data only. Value detected is greater than zero but less than the CRDL.
E - Applies to Gas Chromatography/Mass Spectroscopy data only.
Indicate compound above or below linear range of instrument.
CRDL - Contract Required Detection Limit
Action Levels proposed in Appendix A of 40CFR254.521(a)
Blank Space - Value is below the Method Detection Limit(MDL).
N/A - Not Applicable
(a) - Data reported in ug/kg.

# SITE 2, OIL WATER SEPARATOR
## 187th Fighter Group
## DANNELLY ANG - Montgomery, Alabama [a]

| Client Sample ID | | | 03BS-12-14 | 03BS-12-14D | 03BS12-14 MS | 03BS12-14 DUP | 04BS-0-2 | 04BS-6-8 | 04BS-14-16 |
|---|---|---|---|---|---|---|---|---|---|
| Lab Sample Number | | | 29017013 | 29017014 | 29017M14 | 29017P14 | 29017001 | 29017002 | 29017003 |
| Matrix | | | SOIL | SOIL | SOIL | SOIL | SOIL | SOIL | SOIL |
| Sample Date | | | 3/6/91 | 3/6/91 | 3/6/91 | 3/6/91 | 3/6/91 | 3/6/91 | 3/6/91 |
| | CRDL | Action | | | | | | | |
| Semivolatile Compounds | ug/kg | Levels (ug/kg) | | | | | | | |
| Acenaphthene | 330 | N/A | | | | | | | |
| 2,4-Dintrophenol | 1600 | 200,000 | | | | | | | |
| 4-Nitrophenol | 1600 | N/A | | | | | | | |
| Dibenzofuran | 330 | N/A | | | | | | | |
| 2,4-Dinitrotoluene | 330 | N/A | | | | | | | |
| Diethylphthalate | 330 | 6E+07 | | | | | | | |
| 4-Chlorophenyl-phenylether | 330 | N/A | | | | | | | |
| 4-Nitroaniline | 1600 | N/A | | | | | | | |
| 4,6-Dinitro-2-methylphenol | 1600 | N/A | | | | | | | |
| 4-Bromophenyl-phenylether | 330 | N/A | | | | | | | |

Notes:

B - Applies to organic data only. Present in the corresponding method blank
J - Applies to organic data only. Value detected is greater than zero but less than the CRDL.
E - Applies to Gas Chromatography/Mass Spectroscopy data only.
Indicate compound above or below linear range of instrument.
CRDL - Contract Required Detection Limit
Action Levels proposed in Appendix A of 40CFR254.521(a)
Blank Space - Value is below the Method Detection Limit(MDL).
N/A - Not Applicable
(a) - Data reported in ug/kg.

# SITE 2, OIL WATER SEPARATOR
## 187th Fighter Group
## DANNELLY ANG - Montgomery, Alabama [a]

| Client Sample ID | | | 03BS-12-14 | 03BS-12-14D | 03BS12-14 MS | 03BS12-14 DUP | 04BS-0-2 | 04BS-6-8 | 04BS-14-16 |
|---|---|---|---|---|---|---|---|---|---|
| Lab Sample Number | | | 29017013 | 29017014 | 29017M14 | 29017P14 | 29017001 | 29017002 | 29017003 |
| Matrix | | | SOIL | SOIL | SOIL | SOIL | SOIL | SOIL | SOIL |
| Sample Date | | | 3/6/91 | 3/6/91 | 3/6/91 | 3/6/91 | 3/6/91 | 3/6/91 | 3/6/91 |
| | CRDL | Action | | | | | | | |
| Semivolatile Compounds | ug/kg | Levels (ug/kg) | | | | | | | |
| Hexachlorobenzene | 330 | N/A | | | | | | | |
| Pentachlorophenol | 1600 | 2E+06 | | | | | | | |
| Butylbenzylphthalate | 330 | 2E+07 | | | | | | | |
| 3,3'-Dichlorobenzidine | 660 | 2,000 | | | | | | | |
| Di-n-octylphthalate | 330 | N/A | | | | | | | |

Notes:

B - Applies to organic data only. Present in the corresponding method blank
J - Applies to organic data only. Value detected is greater than zero but less than the CRDL.
E - Applies to Gas Chromatography/Mass Spectroscopy data only.
Indicate compound above or below linear range of instrument.
CRDL - Contract Required Detection Limit
Action Levels proposed in Appendix A of 40CFR254.521(a)
Blank Space - Value is below the Method Detection Limit(MDL).
N/A - Not Applicable
(a) - Data reported in ug/kg.

# SITE 2, OIL WATER SEPARATOR
## 187th Fighter Group
## DANNELLY ANG - Montgomery, Alabama [a]

| Client Sample ID | | | 04BS-14-16D | 05BS-0-2 | 05BS-8-10 | 05BS-12-14 |
|---|---|---|---|---|---|---|
| Lab Sample Number | | | 29017004 | 29017008 | 29017009 | 29017010 |
| Matrix | | | SOIL | SOIL | SOIL | SOIL |
| Sample Date | | | 3/6/91 | 3/6/91 | 3/6/91 | 3/6/91 |
| | CRDL | Action | | | | |
| Semivolatile Compounds | ug/kg | Levels (ug/kg) | | | | |
| 2-Methylnaphthalene | 330 | N/A | 180 J | | 1200 | 69 J |
| Anthracene | 330 | N/A | | | | |
| Benzo(a)anthracene | 330 | N/A | | | 52 J | |
| Benzo(a)pyrene | 330 | N/A | | | 57 J | |
| Benzo(b)fluoranthene | 330 | N/A | | | 83 J | |
| Benzo(g,h,i)perylene | 330 | N/A | | | 50 J | |
| Benzo(k)fluoranthene | 330 | N/A | | | 64 J | |
| Benzoic Acid | 1600 | N/A | | | | 780 J |
| Chrysene | 330 | N/A | | | 84 J | |
| Di-n-butylphthalate | 330 | 8E+06 | | | | |

Notes:

B - Applies to organic data only. Present in the corresponding method blank
J - Applies to organic data only. Value detected is greater than zero but less than the CRDL.
E - Applies to Gas Chromatography/Mass Spectroscopy data only.
Indicate compound above or below linear range of instrument.
CRDL - Contract Required Detection Limit
Action Levels proposed in Appendix A of 40CFR254.521(a)
Blank Space - Value is below the Method Detection Limit(MDL).
N/A - Not Applicable
(a) - Data reported in ug/kg.

# SITE 2, OIL WATER SEPARATOR
## 187th Fighter Group
## DANNELLY ANG - Montgomery, Alabama [a]

| Client Sample ID | | | 04BS-14-16D | 05BS-0-2 | 05BS-8-10 | 05BS-12-14 |
|---|---|---|---|---|---|---|
| Lab Sample Number | | | 29017004 | 29017008 | 29017009 | 29017010 |
| Matrix | | | SOIL | SOIL | SOIL | SOIL |
| Sample Date | | | 3/6/91 | 3/6/91 | 3/6/91 | 3/6/91 |
| Semivolatile Compounds | CRDL ug/kg | Action Levels (ug/kg) | | | | |
| Dibenz(a,h)anthracene | 330 | N/A | | | | |
| Fluoranthene | 330 | N/A | | | 92 J | |
| Fluorene | 330 | N/A | | | | |
| Indeno(1,2,3-cd)pyrene | 330 | N/A | | | 57 J | |
| N-Nitrosodiphenylamine | 330 | 100,000 | 57 J | | 82 J | |
| Naphthalene | 330 | N/A | 420 | | 1100 | 92 J |
| Nitrobenzene | 330 | 40,000 | | | | |
| Phenanthrene | 330 | N/A | | | 49 J | |
| Pyrene | 330 | N/A | | | 67 J | |
| Bis(2-Ethylhexyl)phthalate | 330 | 50,000 | 2300 B | 1000 B | 6100 B | 2700 B |

Notes:

B - Applies to organic data only. Present in the corresponding method blank
J - Applies to organic data only. Value detected is greater than zero but less than the CRDL.
E - Applies to Gas Chromatography/Mass Spectroscopy data only.
Indicate compound above or below linear range of instrument.
CRDL - Contract Required Detection Limit
Action Levels proposed in Appendix A of 40CFR254.521(a)
Blank Space - Value is below the Method Detection Limit(MDL).
N/A - Not Applicable
(a) - Data reported in ug/kg.

# SITE 2, OIL WATER SEPARATOR
## 187th Fighter Group
## DANNELLY ANG - Montgomery, Alabama [a]

| Client Sample ID | | | 04BS-14-16D | 05BS-0-2 | 05BS-8-10 | 05BS-12-14 |
|---|---|---|---|---|---|---|
| Lab Sample Number | | | 29017004 | 29017008 | 29017009 | 29017010 |
| Matrix | | | SOIL | SOIL | SOIL | SOIL |
| Sample Date | | | 3/6/91 | 3/6/91 | 3/6/91 | 3/6/91 |
| | CRDL | Action | | | | |
| Semivolatile Compounds | ug/kg | Levels (ug/kg) | | | | |
| Phenol | 330 | 5E+07 | | | | |
| bis(2-Chloroethyl)Ether | 330 | N/A | | | | |
| 2-Chlorophenol | 330 | 400,000 | | | | |
| 1,3-Dichlorobenzene | 330 | N/A | | | | |
| 1,4-Dichlorobenzene | 330 | N/A | | | | |
| Benzyl Alcohol | 330 | N/A | | | | |
| 1,2-Dichlorobenzene | 330 | N/A | | | | |
| 2-Methylphenol | 330 | N/A | | | | |
| bis(2-Chloroisopropyl)Ether | 330 | N/A | | | | |
| 4-Methylphenol | 330 | N/A | | | | |

Notes:

B - Applies to organic data only. Present in the corresponding method blank
J - Applies to organic data only. Value detected is greater than zero but less than the CRDL.
E - Applies to Gas Chromatography/Mass Spectroscopy data only.
Indicate compound above or below linear range of instrument.
CRDL - Contract Required Detection Limit
Action Levels proposed in Appendix A of 40CFR254.521(a)
Blank Space - Value is below the Method Detection Limit(MDL).
N/A - Not Applicable
(a) - Data reported in ug/kg.

# SITE 2, OIL WATER SEPARATOR
## 187th Fighter Group
## DANNELLY ANG - Montgomery, Alabama [a]

| Client Sample ID | | | 04BS-14-16D | 05BS-0-2 | 05BS-8-10 | 05BS-12-14 |
|---|---|---|---|---|---|---|
| Lab Sample Number | | | 29017004 | 29017008 | 29017009 | 29017010 |
| Matrix | | | SOIL | SOIL | SOIL | SOIL |
| Sample Date | | | 3/6/91 | 3/6/91 | 3/6/91 | 3/6/91 |
| | CRDL | Action | | | | |
| Semivolatile Compounds | ug/kg | Levels (ug/kg) | | | | |
| N-Nitroso-di-n-propylamine | 330 | 100 | | | | |
| Hexachloroethane | 330 | 80,000 | | | | |
| Isophorone | 330 | 2E+06 | | | | |
| 2-Nitrophenol | 330 | N/A | | | | |
| 2,4-Dimethylphenol | 330 | N/A | | | | |
| bis(2-Chloroethoxy)Methane | 330 | N/A | | | | |
| 2,4-Dichlorophenol | 330 | 200,000 | | | | |
| 1,2,4-Trichlorobenzene | 330 | 2E+06 | | | | |
| 4-Chloroaniline | 330 | N/A | | | | |
| Hexachlorobutadiene | 330 | 90,000 | | | | |

Notes:

B - Applies to organic data only. Present in the corresponding method blank
J - Applies to organic data only. Value detected is greater than zero but less than the CRDL.
E - Applies to Gas Chromatography/Mass Spectroscopy data only.
Indicate compound above or below linear range of instrument.
CRDL - Contract Required Detection Limit
Action Levels proposed in Appendix A of 40CFR254.521(a)
Blank Space - Value is below the Method Detection Limit(MDL).
N/A - Not Applicable
(a) - Data reported in ug/kg.

# SITE 2, OIL WATER SEPARATOR
## 187th Fighter Group
## DANNELLY ANG - Montgomery, Alabama [a]

| Client Sample ID | | | 04BS-14-16D | 05BS-0-2 | 05BS-8-10 | 05BS-12-14 |
|---|---|---|---|---|---|---|
| Lab Sample Number | | | 29017004 | 29017008 | 29017009 | 29017010 |
| Matrix | | | SOIL | SOIL | SOIL | SOIL |
| Sample Date | | | 3/6/91 | 3/6/91 | 3/6/91 | 3/6/91 |
| | CRDL | Action | | | | |
| Semivolatile Compounds | ug/kg | Levels (ug/kg) | | | | |
| 4-Chloro-3-methylphenol | 330 | N/A | | | | |
| Hexachlorocyclopentadiene | 330 | 600,000 | | | | |
| 2,4,6-Trichlorophenol | 330 | 40,000 | | | | |
| 2,4,5-Trichlorophenol | 1600 | 8E+06 | | | | |
| 2-Chloronaphthalene | 330 | N/A | | | | |
| 2-Nitroaniline | 1600 | N/A | | | | |
| Dimethyl Phthalate | 330 | N/A | | | | |
| Acenaphthylene | 330 | N/A | | | | |
| 2,6-Dinitrotoluene | 330 | 1,000 | | | | |
| 3-Nitroaniline | 1600 | N/A | | | | |

Notes:

B - Applies to organic data only. Present in the corresponding method blank
J - Applies to organic data only. Value detected is greater than zero but less than the CRDL.
E - Applies to Gas Chromatography/Mass Spectroscopy data only.
Indicate compound above or below linear range of instrument.
CRDL - Contract Required Detection Limit
Action Levels proposed in Appendix A of 40CFR254.521(a)
Blank Space - Value is below the Method Detection Limit(MDL).
N/A - Not Applicable
(a) - Data reported in ug/kg.

# SITE 2, OIL WATER SEPARATOR
## 187th Fighter Group
## DANNELLY ANG - Montgomery, Alabama [a]

| Client Sample ID | | | 04BS-14-16D | 05BS-0-2 | 05BS-8-10 | 05BS-12-14 |
|---|---|---|---|---|---|---|
| Lab Sample Number | | | 29017004 | 29017008 | 29017009 | 29017010 |
| Matrix | | | SOIL | SOIL | SOIL | SOIL |
| Sample Date | | | 3/6/91 | 3/6/91 | 3/6/91 | 3/6/91 |
| Semivolatile Compounds | CRDL ug/kg | Action Levels (ug/kg) | | | | |
| Acenaphthene | 330 | N/A | | | | |
| 2,4-Dintrophenol | 1600 | 200,000 | | | | |
| 4-Nitrophenol | 1600 | N/A | | | | |
| Dibenzofuran | 330 | N/A | | | | |
| 2,4-Dinitrotoluene | 330 | N/A | | | | |
| Diethylphthalate | 330 | 6E+07 | | | | |
| 4-Chlorophenyl-phenylether | 330 | N/A | | | | |
| 4-Nitroaniline | 1600 | N/A | | | | |
| 4,6-Dinitro-2-methylphenol | 1600 | N/A | | | | |
| 4-Bromophenyl-phenylether | 330 | N/A | | | | |

Notes:

B - Applies to organic data only. Present in the corresponding method blank
J - Applies to organic data only. Value detected is greater than zero but less than the CRDL.
E - Applies to Gas Chromatography/Mass Spectroscopy data only.
Indicate compound above or below linear range of instrument.
CRDL - Contract Required Detection Limit
Action Levels proposed in Appendix A of 40CFR254.521(a)
Blank Space - Value is below the Method Detection Limit(MDL).
N/A - Not Applicable
(a) - Data reported in ug/kg.

# SITE 2, OIL WATER SEPARATOR
## 187th Fighter Group
## DANNELLY ANG - Montgomery, Alabama [a]

| Client Sample ID | | | 04BS-14-16D | 05BS-0-2 | 05BS-8-10 | 05BS-12-14 |
|---|---|---|---|---|---|---|
| Lab Sample Number | | | 29017004 | 29017008 | 29017009 | 29017010 |
| Matrix | | | SOIL | SOIL | SOIL | SOIL |
| Sample Date | | | 3/6/91 | 3/6/91 | 3/6/91 | 3/6/91 |
| | CRDL | Action | | | | |
| Semivolatile Compounds | ug/kg | Levels (ug/kg) | | | | |
| Hexachlorobenzene | 330 | N/A | | | | |
| Pentachlorophenol | 1600 | 2E+06 | | | | |
| Butylbenzylphthalate | 330 | 2E+07 | | | | |
| 3,3'-Dichlorobenzidine | 660 | 2,000 | | | | |
| Di-n-octylphthalate | 330 | N/A | | | | |

Notes:

B - Applies to organic data only. Present in the corresponding method blank
J - Applies to organic data only. Value detected is greater than zero but less than the CRDL.
E - Applies to Gas Chromatography/Mass Spectroscopy data only.
Indicate compound above or below linear range of instrument.
CRDL - Contract Required Detection Limit
Action Levels proposed in Appendix A of 40CFR254.521(a)
Blank Space - Value is below the Method Detection Limit(MDL).
N/A - Not Applicable
(a) - Data reported in ug/kg.

# SITE 2, OIL WATER SEPARATOR
## 187th Fighter Group
## DANNELLY ANG - Montgomery, Alabama [a]

| Client Sample ID | | | 01BS-0-2 | 01BS-10-12 | 01BS-14-16 | 02B-S-0-2 | 02B-S-12-14 | 02B-S-18-20 | 03BS-0-2 | 03BS-6-8 |
|---|---|---|---|---|---|---|---|---|---|---|
| Lab Sample Number | | | 29017005 | 29017006 | 29017007 | 28934001 | 28934002 | 28934003 | 29017011 | 29017012 |
| Matrix | | | SOIL | SOIL | SOIL | SOIL | SOIL | SOIL | SOIL | SOIL |
| Sample Date | | | 3/6/91 | 3/6/91 | 3/6/91 | 2/28/91 | 2/28/91 | 2/28/91 | 3/6/91 | 3/6/91 |
| Inorganics | CRDL mg/kg | Action Levels (mg/kg) | | | | | | | | |
| Antimony | 16.2 | 30,000 | | | 5.3 B | | | 3.7 B | | |
| Arsenic | 2.7 | 80,000 | | | 5.1 | | | 7.6 | | |
| Barium | 54 | 4E+06 | | | 33.6 B | | | 87.1 | | |
| Cadmium | 1.4 | 40,000 | | | 0.81 B | | | 0.75 B | | |
| Chromium | 2.7 | 400,000 | | | 19.0 | | | 21.5 | | |
| Copper | 6.8 | 400,000 | | | 37.4 | | | 13.8 | | |
| Lead | 0.8 | N/A | | | 5.6 | | | 7.8 | | |
| Mercury | 0.05 | 20,000 | | | | | | | | |
| Nickel | 10.8 | 200,000 | | | 25.1 | | | 19.8 | | |
| Selenium | 1.4 | N/A | | | 0.71 B | | | | | |
| Silver | 2.7 | 200,000 | | | | | | | | |
| Thallium | 2.7 | 6,000 | | | 0.28 B | | | | | |
| Zinc | 5.4 | 4E+06 | | | 65.6 | | | 53.5 | | |

Notes:

B - Value detected is less than the CRDL but greater than of equal to the MDL.
CRDL - Contract Required Detection Limit
Action Levels proposed in Appendix A of 40CFR254.521(a)
Blank Space - Value is below the Method Detection Limit(MDL).
CRDL expressed in mg/kg = {CRDL in ug/L * Digestion Factor (Assuming 200)
* Unit Conversion(1/1000)}/%Solids(Assuming 75%)
N/A - Not Applicable
N/C - No change in the RPD.
(c) - Pelative Percent Difference(RPD) for duplicate samples.
(d) - Percent Recovery (%R) for Matrix Spike(MS) samples.
(a) - Data reported in mg/kg.

# SITE 2, OIL WATER SEPARATOR
## 187th Fighter Group
## DANNELLY ANG - Montgomery, Alabama [a]

| Client Sample ID | | | 03BS-12-14 | 03BS-12-14D | 03BS12-14 MS | 03BS12-14 DUP | 04BS-0-2 | 04BS-6-8 | 04BS-14-16 | 04BS-14-16D |
|---|---|---|---|---|---|---|---|---|---|---|
| Lab Sample Number | | | 29017013 | 29017014 | 29017M14 | 29017P14 | 29017001 | 29017002 | 29017003 | 29017004 |
| Matrix | | | SOIL | SOIL | SOIL (d) | SOIL (c) | SOIL | SOIL | SOIL | SOIL |
| Sample Date | | | 3/6/91 | 3/6/91 | 3/6/91 | 3/6/91 | 3/6/91 | 3/6/91 | 3/6/91 | 3/6/91 |
| Inorganics | CRDL mg/kg | Action Levels (mg/kg) | | | | | | | | |
| Antimony | 16.2 | 30,000 | 4.1 B | 3.1 B | 62.4 | 59.7 | | 5.2 B | | |
| Arsenic | 2.7 | 80,000 | | | 91.8 | N/C | | | | |
| Barium | 54 | 4E+06 | 31.3 B | 50.3 B | 92.1 | 8.0 | | 55.7 | | |
| Cadmium | 1.4 | 40,000 | 0.65 B | 0.48 B | 81.0 | 38.7 | | 0.45 B | | |
| Chromium | 2.7 | 400,000 | 19.2 | 17.8 | 171.4 | 35.4 | | 16.8 | | |
| Copper | 6.8 | 400,000 | 18.9 | 18.2 | 91.2 | 0.9 | | 11.3 | | |
| Lead | 0.8 | N/A | 8.8 | 6.3 | 106.7 | 3.3 | | 5.2 | | |
| Mercury | 0.05 | 20,000 | | | 114.3 | N/C | | | | |
| Nickel | 10.8 | 200,000 | 16.3 | 14.6 | 88.9 | 12.7 | | 15.4 | | |
| Selenium | 1.4 | N/A | 0.97 B | 3.0 | 41.9 | 23.7 | | 0.40 B | | |
| Silver | 2.7 | 200,000 | | | 85.2 | N/C | | | | |
| Thallium | 2.7 | 6,000 | | 0.23 B | 84.4 | N/C | | | | |
| Zinc | 5.4 | 4E+06 | 39.6 | 49.0 | 92.6 | 11.3 | | 48.0 | | |

Notes:

B - Value detected is less than the CRDL but greater than of equal to the MDL.
CRDL - Contract Required Detection Limit
Action Levels proposed in Appendix A of 40CFR254.521(a)
Blank Space - Value is below the Method Detection Limit(MDL).
CRDL expressed in mg/kg = {CRDL in ug/L * Digestion Factor (Assuming 200)
* Unit Conversion(1/1000)}/%Solids(Assuming 75%)
N/A - Not Applicable
N/C - No change in the RPD.
(c) - Pelative Percent Difference(RPD) for duplicate samples.
(d) - Percent Recovery (%R) for Matrix Spike(MS) samples.
(a) - Data reported in mg/kg.

# SITE 2, OIL WATER SEPARATOR
## 187th Fighter Group
## DANNELLY ANG - Montgomery, Alabama [a]

| Client Sample ID | | | 05BS-0-2 | 05BS-8-10 | 05BS-12-14 |
|---|---|---|---|---|---|
| Lab Sample Number | | | 29017008 | 29017009 | 29017010 |
| Matrix | | | SOIL | SOIL | SOIL |
| Sample Date | | | 3/6/91 | 3/6/91 | 3/6/91 |
| Inorganics | CRDL mg/kg | Action Levels (mg/kg) | | | |
| Antimony | 16.2 | 30,000 | 2.8 B | | |
| Arsenic | 2.7 | 80,000 | 5.5 | | |
| Barium | 54 | 4E+06 | 227 | | |
| Cadmium | 1.4 | 40,000 | 0.47 B | | |
| Chromium | 2.7 | 400,000 | 14.9 | | |
| Copper | 6.8 | 400,000 | 8.6 | | |
| Lead | 0.8 | N/A | 5.5 | | |
| Mercury | 0.05 | 20,000 | | | |
| Nickel | 10.8 | 200,000 | 14.2 | | |
| Selenium | 1.4 | N/A | | | |
| Silver | 2.7 | 200,000 | | | |
| Thallium | 2.7 | 6,000 | | | |
| Zinc | 5.4 | 4E+06 | 35.4 | | |

Notes:

B - Value detected is less than the CRDL but greater than of equal to the MDL.
CRDL - Contract Required Detection Limit
Action Levels proposed in Appendix A of 40CFR254.521(a)
Blank Space - Value is below the Method Detection Limit(MDL).
CRDL expressed in mg/kg = {CRDL in ug/L * Digestion Factor (Assuming 200)
* Unit Conversion(1/1000)}/%Solids(Assuming 75%)
N/A - Not Applicable
N/C - No change in the RPD.
(c) - Pelative Percent Difference(RPD) for duplicate samples.
(d) - Percent Recovery (%R) for Matrix Spike(MS) samples.
(a) - Data reported in mg/kg.

# SITE 2, OIL WATER SEPARATOR
## 187th Fighter Group
## DANNELLY ANG - Montgomery, Alabama (a)

| Client Sample ID | O1BS | O2BS | O3BS | O3BSDUP | O4BS | O4BSDUP | O4BS** | O4BSDUP** | O5BS |
|---|---|---|---|---|---|---|---|---|---|
| Lab Sample Number | 17978 | 17946 | 17978 | 17978 | 17947 | 17947 | 17978 | 17978 | 17978 |
| Matrix | SOIL | SOIL | SOIL | SOIL | SOIL | SOIL | SOIL | SOIL | SOIL |
| Sample Date | 3/6/91 | 2/28/91 | 3/6/91 | 3/6/91 | 3/1/91 | 3/1/91 | 3/6/91 | 3/6/91 | 3/6/91 |
| | | | | | | | | | |
| Total Petroleum Hydrocarbons | | | | | | | | | |
| Sample Depth(Feet) | | | | | | | | | |
| 0-2 | < 1.1 | 16 | < 1.1 | | 12.8 | | 2120 | | 5.5 |
| 6-8 | | | < 1.1 | | 95.1 | | 69.1 | | |
| 8-10 | | | | | | | | | 5.7 |
| 10-12 | < 1.1 | | | | | | | | |
| 12-14 | | < 1.1 | < 1.1 | < 1.1 | | | | | 12.1 |
| 14-16 | < 1.1 | | | | 378 | 113 | < 1.1 | 6.6 | |
| 18-20 | | < 1.1 | | | | | | | |

Notes:

** - Indicated the boring was redrilled and sampled.

Shaded areas indicate depth intervals not sampled.

(a) - Data reported in mg/kg.

# SITE 4 (APRON SPILL AREA)
## 187th Fighter Group
## DANNELLY ANG - Montgomery, Alabama [a]

| Client Sample ID | | | A1BS-0-2 | A1BS-8-10 | A1BS-16-18 | A1-SS-0-6 | A1-SS-6-24 | A2BS-4-6 | A2BS-12-14 | A2BS-12-14DUP |
|---|---|---|---|---|---|---|---|---|---|---|
| Lab Sample Number | | | 29032004 | 29032005 | 29032006 | 17894001 | 17894002 | 29046001 | 29046002 | 29046003 |
| Matrix | | | SOIL | SOIL | SOIL | SOIL | SOIL | SOIL | SOIL | SOIL |
| Sample Date | | | 3/7/91 | 3/7/91 | 3/7/91 | 2/21/91 | 2/21/91 | 3/8/91 | 3/8/91 | 3/8/91 |
| PAH Compounds | CRDL ug/kg | Action Levels (ug/kg) | | | | | | | | |
| Anthracene | 330 | N/A | | | | | | | | |
| Benzo(a)anthracene | 330 | N/A | | | | | | | | |
| Benzo(a)pyrene | 330 | N/A | | | | | | | | |
| Benzo(b)fluoranthene | 330 | N/A | | | | | | | | |
| Benzo(g,h,i)perylene | 330 | N/A | | | | | | | | |
| Benzo(k)fluoranthene | 330 | N/A | | | | | | | | |
| Chrysene | 330 | N/A | | | | | | | | |
| Dibenzo(a,h)anthracene | 330 | N/A | | | | | | | | |
| Fluoranthene | 330 | N/A | | | | 37 JX | | | | |
| Fluorene | 330 | N/A | | | | | | | | |
| Indeno(1,2,3-cd)pyrene | 330 | N/A | | | | | | | | |
| Phenanthrene | 330 | N/A | | | | | | | | |
| Pyrene | 330 | N/A | | | | 38 JX | | | | |
| Naphthalene | 330 | N/A | | | | | | | | |
| 2-Methylnaphthalene | 330 | N/A | | | | | | | | |
| 1-Methylnaphthalene | 330 | N/A | | | | | | | | |
| Acenaphthylene | 330 | N/A | | | | | | | | |
| Acenaphthene | 330 | N/A | | | | | | | | |

Notes:

JX - The compound was detected and quantitated below CRDL.
CRDL - Contract Required Detection Limit
Action Levels proposed in Appendix A of 40CFR254.521(a)
Blank Space - Value is below the Method Detection Limit(MDL).
N/A - Not Applicable
(a) - Data reported in ug/kg.

# SITE 4 (APRON SPILL AREA)
## 187th Fighter Group
## DANNELLY ANG - Montgomery, Alabama [a]

| Client Sample ID | | | A2BS-18-20 | A2-SS-0-6 | A2-SS-6-24 | A3BS-0-2 | A3BS-8-10 | A3BS-18-20 | A3BS-18-20D | A3-SS-0-6 |
|---|---|---|---|---|---|---|---|---|---|---|
| Lab Sample Number | | | 29046004 | 17894003 | 17894004 | 29032007 | 29032008 | 29032009 | 29032010 | 17894005 |
| Matrix | | | SOIL | SOIL | SOIL | SOIL | SOIL | SOIL | SOIL | SOIL |
| Sample Date | | | 3/8/91 | 2/21/91 | 2/21/91 | 3/7/91 | 3/7/91 | 3/7/91 | 3/7/91 | 2/21/91 |
| PAH Compounds | CRDL ug/kg | Action Levels (ug/kg) | | | | | | | | |
| Anthracene | 330 | N/A | | | | | | | | |
| Benzo(a)anthracene | 330 | N/A | | 880 | 190 | | | | | 6000 |
| Benzo(a)pyrene | 330 | N/A | | 3000 | 220 | | | | | 12000 |
| Benzo(b)fluoranthene | 330 | N/A | | 1500 | 240 | | | | | 9500 |
| Benzo(g,h,i)perylene | 330 | N/A | | 1700 | 250 | | | | | 8800 |
| Benzo(k)fluoranthene | 330 | N/A | | 880 | 130 | | | | | 5000 |
| Chrysene | 330 | N/A | | 1900 | 260 | | | | | 7900 |
| Dibenzo(a,h)anthracene | 330 | N/A | | 390 | 39 JX | | | | | 950 |
| Fluoranthene | 330 | N/A | | 1900 | 340 | | | | | 7400 |
| Fluorene | 330 | N/A | | | | | | | | |
| Indeno(1,2,3-cd)pyrene | 330 | N/A | | 2200 | 260 | | | | | 10000 |
| Phenanthrene | 330 | N/A | | 420 | 140 | | | | | 500 JX |
| Pyrene | 330 | N/A | | 1500 | 280 | | | | | 8600 |
| Naphthalene | 330 | N/A | | | | | | | | |
| 2-Methylnaphthalene | 330 | N/A | | | | | | | | |
| 1-Methylnaphthalene | 330 | N/A | | | | | | | | |
| Acenaphthylene | 330 | N/A | | | | | | | | |
| Acenaphthene | 330 | N/A | | | | | | | | |

Notes:
- JX - The compound was detected and quantitated below CRDL.
- CRDL - Contract Required Detection Limit
- Action Levels proposed in Appendix A of 40CFR254.521(a)
- Blank Space - Value is below the Method Detection Limit(MDL).
- N/A - Not Applicable
- (a) - Data reported in ug/kg.

# SITE 4 (APRON SPILL AREA)
## 187th Fighter Group
## DANNELLY ANG - Montgomery, Alabama [a]

| Client Sample ID | | | A3-SS-0-6-DUP | A3-SS-6-24 | A3-SS-6-24DUP | A4-SS-0-6 | A4-SS-6-24 | A5-SS-0-6 | A5-SS-6-24 | A6-SS-0-6 |
|---|---|---|---|---|---|---|---|---|---|---|
| Lab Sample Number | | | 17894006 | 17894007 | 17894008 | 17894009 | 17894010 | 17894011 | 17894012 | 17894013 |
| Matrix | | | SOIL | SOIL | SOIL | SOIL | SOIL | SOIL | SOIL | SOIL |
| Sample Date | | | 2/21/91 | 2/21/91 | 2/21/91 | 2/21/91 | 2/21/91 | 2/21/91 | 2/21/91 | 2/21/91 |
| PAH Compounds | CRDL ug/kg | Action Levels (ug/kg) | | | | | | | | |
| Anthracene | 330 | N/A | | | | | | 1000 | 920 | |
| Benzo(a)anthracene | 330 | N/A | 130 | 110 | | 720 | 750 | 4100 | 3800 | 710 |
| Benzo(a)pyrene | 330 | N/A | 310 | 230 | | 1200 | 1000 | 5000 | 4600 | 1400 |
| Benzo(b)fluoranthene | 330 | N/A | 330 | 260 | | 1400 | 880 | 4100 | 3700 | 1500 |
| Benzo(g,h,i)perylene | 330 | N/A | 670 | 420 | 45 JX | 1500 | 940 | 3400 | 3000 | 1200 |
| Benzo(k)fluoranthene | 330 | N/A | 170 | 120 | | 700 | 490 | 2200 | 2000 | 810 |
| Chrysene | 330 | N/A | 250 | 230 | | 1400 | 960 | 5300 | 4800 | 1600 |
| Dibenzo(a,h)anthracene | 330 | N/A | 80 | 56 | | 200 JX | 140 JX | 530 JX | 780 | 220 JX |
| Fluoranthene | 330 | N/A | 260 | 260 | 43 JX | 2200 | 1600 | 9400 | 8400 | 2700 |
| Fluorene | 330 | N/A | | | | | | | 300 JX | |
| Indeno(1,2,3-cd)pyrene | 330 | N/A | 570 | 390 | 68 | 1400 | 900 | 4100 | 3800 | 1300 |
| Phenanthrene | 330 | N/A | 79 | 91 | | 830 | 840 | 3300 | 2900 | 910 |
| Pyrene | 330 | N/A | 230 | 240 | | 1800 | 1400 | 7600 | 7100 | 2200 |
| Naphthalene | 330 | N/A | | | | | | | | |
| 2-Methylnaphthalene | 330 | N/A | | | | | | | | |
| 1-Methylnaphthalene | 330 | N/A | | | | | | | | |
| Acenaphthylene | 330 | N/A | | | | | | | | |
| Acenaphthene | 330 | N/A | | | | | | | | |

Notes:

JX - The compound was detected and quantitated below CRDL.
CRDL - Contract Required Detection Limit
Action Levels proposed in Appendix A of 40CFR254.521(a)
Blank Space - Value is below the Method Detection Limit(MDL).
N/A - Not Applicable
(a) - Data reported in ug/kg.

# SITE 4 (APRON SPILL AREA)
## 187th Fighter Group
## DANNELLY ANG - Montgomery, Alabama [a]

| Client Sample ID | | | A6-SS-6-24 | A7-SS-0-6 | A7-SS-6-24 | A8-SS-0-6 | A8-SS-6-24 |
|---|---|---|---|---|---|---|---|
| Lab Sample Number | | | 17894014 | 17894015 | 17894016 | 17894017 | 17894018 |
| Matrix | | | SOIL | SOIL | SOIL | SOIL | SOIL |
| Sample Date | | | 2/21/91 | 2/22/91 | 2/22/91 | 2/22/91 | 2/22/91 |
| PAH Compounds | CRDL ug/kg | Action Levels (ug/kg) | | | | | |
| Anthracene | 330 | N/A | | | | | |
| Benzo(a)anthracene | 330 | N/A | 4200 | 330 JX | 890 | | |
| Benzo(a)pyrene | 330 | N/A | 4500 | 640 | 1100 | | |
| Benzo(b)fluoranthene | 330 | N/A | 4700 | 470 | 820 | | |
| Benzo(g,h,i)perylene | 330 | N/A | 3600 | 1000 | 860 | | |
| Benzo(k)fluoranthene | 330 | N/A | 2500 | 250 JX | 480 | | |
| Chrysene | 330 | N/A | 5900 | 690 | 1100 | | |
| Dibenzo(a,h)anthracene | 330 | N/A | 700 | | | | |
| Fluoranthene | 330 | N/A | 10000 | 580 | 1200 | 43 JX | |
| Fluorene | 330 | N/A | | | | | |
| Indeno(1,2,3-cd)pyrene | 330 | N/A | 4200 | 1600 | 910 | | |
| Phenanthrene | 330 | N/A | 4000 | | 230 JX | | |
| Pyrene | 330 | N/A | 8300 | 560 | 1200 | 59 JX | |
| Naphthalene | 330 | N/A | | | | | |
| 2-Methylnaphthalene | 330 | N/A | | | | | |
| 1-Methylnaphthalene | 330 | N/A | | | | | |
| Acenaphthylene | 330 | N/A | | | | | |
| Acenaphthene | 330 | N/A | | | | | |

Notes:

JX - The compound was detected and quantitated below CRDL.
CRDL - Contract Required Detection Limit
Action Levels proposed in Appendix A of 40CFR254.521(a)
Blank Space - Value is below the Method Detection Limit(MDL).
N/A - Not Applicable
(a) - Data reported in ug/kg.

# QC DATA
## 187th Fighter Group
## DANNELLY ANG - Montgomery, Alabama [a]

| Client Sample ID | | | | TRAVEL BLANK | TRAVEL BLANK | TRAVEL BLANK | TRAVEL BLANK | TRAVEL BLANK | TRAVELBLK2-26 | TRIP BLANK | TRV-02-2-28 |
|---|---|---|---|---|---|---|---|---|---|---|---|
| Lab Sample Number | | | | 29032003 | 28973002 | 28998018 | 29046006 | 29017016 | 28909009 | 28891019 | 28934015 |
| Matrix | | | | WATER | WATER | WATER | WATER | WATER | WATER | WATER | WATER |
| Sample Date | | | | | | | | | 2/26/91 | | 2/28/91 |
| | MCL | CRDL | Action | | | | | | | | |
| Volatile Compounds | ug/L | ug/L | Levels (ug/L) | | | | | | | | |
| trans-1,3-Dichloropropene | N/A | 5 | 10 | | | | | | | | |
| 4-Methyl-2-Pentanone | N/A | 10 | N/A | | | | | | | | |
| 2-Hexanone | N/A | 10 | N/A | | | | | | | | |
| Tetrachloroethene | 5 | 5 | N/A | | | | | | | | |
| 1,1,2,2-Tetrachloroethane | N/A | 5 | 2 | | | | | | | | |
| Toluene | 1,000 | 5 | 10,000 | | | | | | | | |
| Chlorobenzene | N/A | 5 | 700 | | | | | | | | |
| Ethyl Benzene | 700 | 5 | 4,000 | | | | | | | | |
| Styrene | 100 | 5 | 7,000 | | | | | | | | |
| Xylene (total) | 10,000 | 5 | 7,000 | | | | | | | | |

Notes:

B - Applies to organic data only. Present in the corresponding method blank.
J - Applies to organic data only. Value detected is greater than zero but less than the CRDL.
E - Applies to Gas Chromatography/Mass Spectroscopy data only.
Indicate compound above or below linear range of instrument.
Blank Space - Value is below the Method Detection Limit(MDL).
MCL - Maximum Contaminant Level (U.S. Drinking Water Standards)
CRDL - Contract Required Detection Limit
Action Levels proposed in Appendix A of 40CFR254.521(a)
N/A - Not Applicable
(a) - Data reported in ug/L.

# QC DATA
## 187th Fighter Group
## DANNELLY ANG - Montgomery, Alabama [a]

| Client Sample ID | | | | ERB-06-3-7 | ERB-07-3-8 | ER-1 | FB-01-3-4 | FB-02-3-7 | FB-03-3-7 |
|---|---|---|---|---|---|---|---|---|---|
| Lab Sample Number | | | | 29041001 | 29046005 | 28891020 | 28973001 | 29032002 | 29032001 |
| Matrix | | | | WATER | WATER | WATER | WATER | WATER | WATER |
| Sample Date | | | | 3/7/91 | 3/8/91 | | 3/4/91 | 3/7/91 | 3/7/91 |
| | MCL | CRDL | Action | | | | | | |
| Volatile Compounds | ug/L | ug/L | Levels (ug/L) | | | | | | |
| Acetone | N/A | 10 | 4,000 | | | | | 22 B | |
| Bromodichloromethane | 100 | 5 | 0.03 | | | | | | 14 |
| Bromoform | 100 | 5 | 700 | | | | | | 4 J |
| Carbon Disulfide | N/A | 5 | 4,000 | | | | | | |
| Chloroform | 100 | 5 | 6 | | | | | | 13 |
| Dibromochloromethane | N/A | 5 | N/A | | | | | | 14 |
| Methylene Chloride | N/A | 5 | 5 | | | | | 6 B | 4 BJ |
| Trichloroethene | 5 | 5 | N/A | | | | | | |
| Chloromethane | N/A | 10 | N/A | | | | | | |
| Bromomethane | N/A | 10 | 50 | | | | | | |
| Vinyl Chloride | 2 | 10 | N/A | | | | | | |
| Chloroethane | N/A | 10 | N/A | | | | | | |

Notes:

B - Applies to organic data only. Present in the corresponding method blank.
J - Applies to organic data only. Value detected is greater than zero but less than the CRDL.
E - Applies to Gas Chromatography/Mass Spectroscopy data only.
Indicate compound above or below linear range of instrument.
Blank Space - Value is below the Method Detection Limit(MDL).
MCL - Maximum Contaminant Level (U.S. Drinking Water Standards)
CRDL - Contract Required Detection Limit
Action Levels proposed in Appendix A of 40CFR254.521(a)
N/A - Not Applicable
(a) - Data reported in ug/L.

# QC DATA
## 187th Fighter Group
## DANNELLY ANG - Montgomery, Alabama [a]

| Client Sample ID | | | | EQUIPMENT | ERB05-3-6 DUP | ERB05-3-6 MS | ERB-01-2-26 | ERB-02-2-27 | ERB-03-2-28 | ERB-04-3-5 | ERB-05-3-6 |
|---|---|---|---|---|---|---|---|---|---|---|---|
| Lab Sample Number | | | | 17894020 | 29017P15 | 29017M15 | 28909010 | 28922004 | 28934014 | 28998017 | 29017015 |
| Matrix | | | | WATER | WATER | WATER | WATER | WATER | WATER | WATER | WATER |
| Sample Date | | | | | 3/6/91 | 3/6/91 | 2/26/91 | 2/27/91 | 2/28/91 | 3/5/91 | 3/6/91 |
| Volatile Compounds | MCL ug/L | CRDL ug/L | Action Levels (ug/L) | | | | | | | | |
| Acetone | N/A | 10 | 4,000 | | | | 20 B | 25 B | | | 36 B |
| Bromodichloromethane | 100 | 5 | 0.03 | | | | | | | | |
| Bromoform | 100 | 5 | 700 | | | | | | | | |
| Carbon Disulfide | N/A | 5 | 4,000 | | | | | | | | |
| Chloroform | 100 | 5 | 6 | | | | | | | | |
| Dibromochloromethane | N/A | 5 | N/A | | | | | | | | |
| Methylene Chloride | N/A | 5 | 5 | | | | 18 B | 4 BJ | | | 4 BJ |
| Trichloroethene | 5 | 5 | N/A | | | | | | | | 1 J |
| Chloromethane | N/A | 10 | N/A | | | | | | | | |
| Bromomethane | N/A | 10 | 50 | | | | | | | | |
| Vinyl Chloride | 2 | 10 | N/A | | | | | | | | |
| Chloroethane | N/A | 10 | N/A | | | | | | | | |

Notes:

B - Applies to organic data only. Present in the corresponding method blank.
J - Applies to organic data only. Value detected is greater than zero but less than the CRDL.
E - Applies to Gas Chromatography/Mass Spectroscopy data only.
Indicate compound above or below linear range of instrument.
Blank Space - Value is below the Method Detection Limit(MDL).
MCL - Maximum Contaminant Level (U.S. Drinking Water Standards)
CRDL - Contract Required Detection Limit
Action Levels proposed in Appendix A of 40CFR254.521(a)
N/A - Not Applicable
(a) - Data reported in ug/L.

# QC DATA
## 187th Fighter Group
## DANNELLY ANG - Montgomery, Alabama [a]

| Client Sample ID | | | | ERB-06-3-7 | ERB-07-3-8 | ER-1 | FB-01-3-4 | FB-02-3-7 | FB-03-3-7 | TRAVEL BLANK | TRAVEL BLANK |
|---|---|---|---|---|---|---|---|---|---|---|---|
| Lab Sample Number | | | | 29041001 | 29046005 | 28891020 | 28973001 | 29032002 | 29032001 | 29032003 | 28973002 |
| Matrix | | | | WATER | WATER | WATER | WATER | WATER | WATER | WATER | WATER |
| Sample Date | | | | 3/7/91 | 3/8/91 | | 3/4/91 | 3/7/91 | 3/7/91 | | |
| Semivolatile Compounds | MCL ug/L | CRDL ug/L | Action Levels (ug/L) | | | | | | | | |
| Di-n-butylphthalate | N/A | 10 | N/A | | | | | | 3 J | | |
| N-Nitrosodiphenylamine(1) | N/A | 10 | N/A | | | | | | | | |
| Naphthalene | N/A | 10 | N/A | | | | | 4 BJ | | | |
| bis(2-Ethylhexyl)phthalate | N/A | 10 | 3 | | | | | 2 BJ | 3 J | 37 | |
| Phenol | N/A | 10 | 20,000 | | | | | | | | |
| bis(2-Chloroethyl)Ether | N/A | 10 | 0.03 | | | | | | | | |
| 2-Chlorophenol | N/A | 10 | 200 | | | | | | | | |
| 1,3-Dichlorobenzene | 600 | 10 | N/A | | | | | | | | |
| 1,4-Dichlorobenzene | 750 | 10 | N/A | | | | | | | | |
| Benzyl Alcohol | N/A | 10 | N/A | | | | | | | | |

Notes:

B - Applies to organic data only. Present in the corresponding method blank.
J - Applies to organic data only. Value detected is greater than zero but less than the CRDL.
E - Applies to Gas Chromatography/Mass Spectroscopy data only.
Indicate compound above or below linear range of instrument.
MCL - Maximum Contaminant Level (U.S. Drinking Water Standards)
CRDL - Contract Required Detection Limit
Action Levels proposed in Appendix A of 40CFR254.521(a)
Blank Space - Value is below the Method Detection Limit(MDL).
N/A - Not Applicable
(a) - Data reported in ug/L.

# QC DATA
## 187th Fighter Group
## DANNELLY ANG - Montgomery, Alabama [a]

| Client Sample ID | | | | ERB-06-3-7 | ERB-07-3-8 | ER-1 | FB-01-3-4 | FB-02-3-7 | FB-03-3-7 | TRAVEL BLANK | TRAVEL BLANK |
|---|---|---|---|---|---|---|---|---|---|---|---|
| Lab Sample Number | | | | 29041001 | 29046005 | 28891020 | 28973001 | 29032002 | 29032001 | 29032003 | 28973002 |
| Matrix | | | | WATER | WATER | WATER | WATER | WATER | WATER | WATER | WATER |
| Sample Date | | | | 3/7/91 | 3/8/91 | | 3/4/91 | 3/7/91 | 3/7/91 | | |
| | MCL | CRDL | Action | | | | | | | | |
| Semivolatile Compounds | ug/L | ug/L | Levels (ug/L) | | | | | | | | |
| 1,2-Dichlorobenzene | 600 | 10 | N/A | | | | | | | | |
| 2-Methylphenol | N/A | 10 | N/A | | | | | | | | |
| bis(2-Chloroisopropyl)Ether | N/A | 10 | N/A | | | | | | | | |
| 4-Methylphenol | N/A | 10 | N/A | | | | | | | | |
| N-Nitroso-di-n-propylamine | N/A | 10 | 0.005 | | | | | | | | |
| Hexachloroethane | N/A | 10 | 20 | | | | | | | | |
| Nitrobenzene | N/A | 10 | 20 | | | | | | | | |
| Isophorone | N/A | 10 | 90 | | | | | | | | |
| 2-Nitrophenol | N/A | 10 | N/A | | | | | | | | |
| 2,4-Dimethylphenol | N/A | 50 | N/A | | | | | | | | |

Notes:

B - Applies to organic data only. Present in the corresponding method blank.
J - Applies to organic data only. Value detected is greater than zero but less than the CRDL.
E - Applies to Gas Chromatography/Mass Spectroscopy data only.
Indicate compound above or below linear range of instrument.
MCL - Maximum Contaminant Level (U.S. Drinking Water Standards)
CRDL - Contract Required Detection Limit
Action Levels proposed in Appendix A of 40CFR254.521(a)
Blank Space - Value is below the Method Detection Limit(MDL).
N/A - Not Applicable
(a) - Data reported in ug/L.

# QC DATA
## 187th Fighter Group
## DANNELLY ANG - Montgomery, Alabama [a]

| Client Sample ID | | | | ERB-06-3-7 | ERB-07-3-8 | ER-1 | FB-01-3-4 | FB-02-3-7 | FB-03-3-7 | TRAVEL BLANK | TRAVEL BLANK |
|---|---|---|---|---|---|---|---|---|---|---|---|
| Lab Sample Number | | | | 29041001 | 29046005 | 28891020 | 28973001 | 29032002 | 29032001 | 29032003 | 28973002 |
| Matrix | | | | WATER | WATER | WATER | WATER | WATER | WATER | WATER | WATER |
| Sample Date | | | | 3/7/91 | 3/8/91 | | 3/4/91 | 3/7/91 | 3/7/91 | | |
| | MCL | CRDL | Action | | | | | | | | |
| Semivolatile Compounds | ug/L | ug/L | Levels (ug/L) | | | | | | | | |
| Benzoic Acid | N/A | 10 | N/A | | | | | | | | |
| bis(2-Chloroethoxy)Methane | N/A | 10 | N/A | | | | | | | | |
| 2,4-Dichlorophenol | N/A | 10 | 100 | | | | | | | | |
| 1,2,4-Trichlorobenzene | 70 | 10 | 700 | | | | | | | | |
| 4-Chloroaniline | N/A | 10 | N/A | | | | | | | | |
| Hexachlorobutadiene | N/A | 10 | 4 | | | | | | | | |
| 4-Chloro-3-methylphenol | N/A | 10 | N/A | | | | | | | | |
| 2-Methylnaphthalene | N/A | 10 | N/A | | | | | | | | |
| Hexachlorocyclopentadiene | N/A | 10 | 200 | | | | | | | | |
| 2,4,6-Trichlorophenol | N/A | 10 | 3 | | | | | | | | |

Notes:

B - Applies to organic data only. Present in the corresponding method blank.
J - Applies to organic data only. Value detected is greater than zero but less than the CRDL.
E - Applies to Gas Chromatography/Mass Spectroscopy data only.
Indicate compound above or below linear range of instrument.
MCL - Maximum Contaminant Level (U.S. Drinking Water Standards)
CRDL - Contract Required Detection Limit
Action Levels proposed in Appendix A of 40CFR254.521(a)
Blank Space - Value is below the Method Detection Limit(MDL).
N/A - Not Applicable
(a) - Data reported in ug/L.

# QC DATA
## 187th Fighter Group
## DANNELLY ANG - Montgomery, Alabama [a]

| Client Sample ID | | | | ERB-06-3-7 | ERB-07-3-8 | ER-1 | FB-01-3-4 | FB-02-3-7 | FB-03-3-7 | TRAVEL BLANK | TRAVEL BLANK |
|---|---|---|---|---|---|---|---|---|---|---|---|
| Lab Sample Number | | | | 29041001 | 29046005 | 28891020 | 28973001 | 29032002 | 29032001 | 29032003 | 28973002 |
| Matrix | | | | WATER | WATER | WATER | WATER | WATER | WATER | WATER | WATER |
| Sample Date | | | | 3/7/91 | 3/8/91 | | 3/4/91 | 3/7/91 | 3/7/91 | | |
| | MCL | CRDL | Action | | | | | | | | |
| Semivolatile Compounds | ug/L | ug/L | Levels (ug/L) | | | | | | | | |
| 2,4,5-Trichlorophenol | N/A | 50 | 4000 | | | | | | | | |
| 2-Chloronaphthalene | N/A | 10 | N/A | | | | | | | | |
| 2-Nitroaniline | N/A | 50 | N/A | | | | | | | | |
| Dimethyl Phthalate | N/A | 10 | N/A | | | | | | | | |
| Acenaphthylene | N/A | 10 | N/A | | | | | | | | |
| 2,6-Dinitrotoluene | N/A | 10 | 0.05 | | | | | | | | |
| 3-Nitroaniline | N/A | 50 | N/A | | | | | | | | |
| Acenaphthene | N/A | 10 | N/A | | | | | | | | |
| 2,4-Dintrophenol | N/A | 50 | 70 | | | | | | | | |
| 4-Nitrophenol | N/A | 50 | N/A | | | | | | | | |

Notes:

B - Applies to organic data only. Present in the corresponding method blank.
J - Applies to organic data only. Value detected is greater than zero but less than the CRDL.
E - Applies to Gas Chromatography/Mass Spectroscopy data only.
Indicate compound above or below linear range of instrument.
MCL - Maximum Contaminant Level (U.S. Drinking Water Standards)
CRDL - Contract Required Detection Limit
Action Levels proposed in Appendix A of 40CFR254.521(a)
Blank Space - Value is below the Method Detection Limit(MDL).
N/A - Not Applicable
(a) - Data reported in ug/L.

# QC DATA
## 187th Fighter Group
## DANNELLY ANG - Montgomery, Alabama [a]

| Client Sample ID | | | | ERB-06-3-7 | ERB-07-3-8 | ER-1 | FB-01-3-4 | FB-02-3-7 | FB-03-3-7 | TRAVEL BLANK | TRAVEL BLANK |
|---|---|---|---|---|---|---|---|---|---|---|---|
| Lab Sample Number | | | | 29041001 | 29046005 | 28891020 | 28973001 | 29032002 | 29032001 | 29032003 | 28973002 |
| Matrix | | | | WATER | WATER | WATER | WATER | WATER | WATER | WATER | WATER |
| Sample Date | | | | 3/7/91 | 3/8/91 | | 3/4/91 | 3/7/91 | 3/7/91 | | |
| | MCL | CRDL | Action | | | | | | | | |
| Semivolatile Compounds | ug/L | ug/L | Levels (ug/L) | | | | | | | | |
| Dibenzofuran | N/A | 10 | N/A | | | | | | | | |
| 2,4-Dinitrotoluene | N/A | 10 | N/A | | | | | | | | |
| Diethylphthalate | N/A | 10 | 30,000 | | | | | | | | |
| 4-Chlorophenyl-phenylether | N/A | 10 | N/A | | | | | | | | |
| Fluorene | N/A | 50 | N/A | | | | | | | | |
| 4-Nitroaniline | N/A | 50 | N/A | | | | | | | | |
| 4,6-Dinitro-2-methylphenol | N/A | 50 | N/A | | | | | | | | |
| 4-Bromophenyl-phenylether | N/A | 10 | N/A | | | | | | | | |
| Hexachlorobenzene | 1 | 10 | N/A | | | | | | | | |
| Pentachlorophenol | 1 | 50 | 1000 | | | | | | | | |

Notes:

B - Applies to organic data only. Present in the corresponding method blank.
J - Applies to organic data only. Value detected is greater than zero but less than the CRDL.
E - Applies to Gas Chromatography/Mass Spectroscopy data only.
Indicate compound above or below linear range of instrument.
MCL - Maximum Contaminant Level (U.S. Drinking Water Standards)
CRDL - Contract Required Detection Limit
Action Levels proposed in Appendix A of 40CFR254.521(a)
Blank Space - Value is below the Method Detection Limit(MDL).
N/A - Not Applicable
(a) - Data reported in ug/L.

# QC DATA
## 187th Fighter Group
## DANNELLY ANG - Montgomery, Alabama [a]

| Client Sample ID | | | | ERB-06-3-7 | ERB-07-3-8 | ER-1 | FB-01-3-4 | FB-02-3-7 | FB-03-3-7 | TRAVEL BLANK | TRAVEL BLANK |
|---|---|---|---|---|---|---|---|---|---|---|---|
| Lab Sample Number | | | | 29041001 | 29046005 | 28891020 | 28973001 | 29032002 | 29032001 | 29032003 | 28973002 |
| Matrix | | | | WATER | WATER | WATER | WATER | WATER | WATER | WATER | WATER |
| Sample Date | | | | 3/7/91 | 3/8/91 | | 3/4/91 | 3/7/91 | 3/7/91 | | |
| Semivolatile Compounds | MCL ug/L | CRDL ug/L | Action Levels (ug/L) | | | | | | | | |
| Phenanthrene | N/A | 10 | N/A | | | | | | | | |
| Anthracene | N/A | 10 | N/A | | | | | | | | |
| Fluoranthene | N/A | 10 | N/A | | | | | | | | |
| Pyrene | N/A | 10 | N/A | | | | | | | | |
| Butylbenzylphthalate | N/A | 10 | 7,000 | | | | | | | | |
| 3,3'-Dichlorobenzidine | N/A | 20 | 0.08 | | | | | | | | |
| Benzo(a)anthracene | 0.1 | 10 | N/A | | | | | | | | |
| Chrysene | 0.2 | 10 | N/A | | | | | | | | |
| Di-n-octylphthalate | N/A | 10 | N/A | | | | | | | | |
| Benzo(b)fluoranthene | 0.2 | 10 | N/A | | | | | | | | |

Notes:

B - Applies to organic data only. Present in the corresponding method blank.
J - Applies to organic data only. Value detected is greater than zero but less than the CRDL.
E - Applies to Gas Chromatography/Mass Spectroscopy data only.
Indicate compound above or below linear range of instrument.
MCL - Maximum Contaminant Level (U.S. Drinking Water Standards)
CRDL - Contract Required Detection Limit
Action Levels proposed in Appendix A of 40CFR254.521(a)
Blank Space - Value is below the Method Detection Limit(MDL).
N/A - Not Applicable
(a) - Data reported in ug/L.

# QC DATA
## 187th Fighter Group
## DANNELLY ANG - Montgomery, Alabama [a]

| Client Sample ID | | | | ERB-06-3-7 | ERB-07-3-8 | ER-1 | FB-01-3-4 | FB-02-3-7 | FB-03-3-7 | TRAVEL BLANK | TRAVEL BLANK |
|---|---|---|---|---|---|---|---|---|---|---|---|
| Lab Sample Number | | | | 29041001 | 29046005 | 28891020 | 28973001 | 29032002 | 29032001 | 29032003 | 28973002 |
| Matrix | | | | WATER | WATER | WATER | WATER | WATER | WATER | WATER | WATER |
| Sample Date | | | | 3/7/91 | 3/8/91 | | 3/4/91 | 3/7/91 | 3/7/91 | | |
| | MCL | CRDL | Action | | | | | | | | |
| Semivolatile Compounds | ug/L | ug/L | Levels (ug/L) | | | | | | | | |
| Benzo(k)fluoranthene | 0.2 | 10 | N/A | | | | | | | | |
| Benzo(a)pyrene | 0.2 | 10 | N/A | | | | | | | | |
| Indeno(1,2,3-cd)Pyrene | 0.4 | 10 | N/A | | | | | | | | |
| Dibenz(a,h)Anthracene | 0.3 | 10 | N/A | | | | | | | | |
| benzo(g,h,i)perylene | N/A | 10 | N/A | | | | | | | | |

Notes:

B - Applies to organic data only. Present in the corresponding method blank.
J - Applies to organic data only. Value detected is greater than zero but less than the CRDL.
E - Applies to Gas Chromatography/Mass Spectroscopy data only.
Indicate compound above or below linear range of instrument.
MCL - Maximum Contaminant Level (U.S. Drinking Water Standards)
CRDL - Contract Required Detection Limit
Action Levels proposed in Appendix A of 40CFR254.521(a)
Blank Space - Value is below the Method Detection Limit(MDL).
N/A - Not Applicable
(a) - Data reported in ug/L.

# QC DATA
## 187th Fighter Group
## DANNELLY ANG - Montgomery, Alabama [a]

| Client Sample ID | | | | TRAVEL BLANK | TRAVEL BLANK | TRAVEL BLANK | TRAVELBLK2-26 | TRIP BLANK | TRV-02-2-28 |
|---|---|---|---|---|---|---|---|---|---|
| Lab Sample Number | | | | 28998018 | 29046006 | 29017016 | 28909009 | 28891019 | 28934015 |
| Matrix | | | | WATER | WATER | WATER | WATER | WATER | WATER |
| Sample Date | | | | | | | 2/26/91 | | 2/28/91 |
| Semivolatile Compounds | MCL ug/L | CRDL ug/L | Action Levels (ug/L) | | | | | | |
| Di-n-butylphthalate | N/A | 10 | N/A | | | | | | |
| N-Nitrosodiphenylamine(1) | N/A | 10 | N/A | | | | | | |
| Naphthalene | N/A | 10 | N/A | | | | | | |
| bis(2-Ethylhexyl)phthalate | N/A | 10 | 3 | | | | | | |
| Phenol | N/A | 10 | 20,000 | | | | | | |
| bis(2-Chloroethyl)Ether | N/A | 10 | 0.03 | | | | | | |
| 2-Chlorophenol | N/A | 10 | 200 | | | | | | |
| 1,3-Dichlorobenzene | 600 | 10 | N/A | | | | | | |
| 1,4-Dichlorobenzene | 750 | 10 | N/A | | | | | | |
| Benzyl Alcohol | N/A | 10 | N/A | | | | | | |

Notes:

B - Applies to organic data only. Present in the corresponding method blank.
J - Applies to organic data only. Value detected is greater than zero but less than the CRDL.
E - Applies to Gas Chromatography/Mass Spectroscopy data only.
Indicate compound above or below linear range of instrument.
MCL - Maximum Contaminant Level (U.S. Drinking Water Standards)
CRDL - Contract Required Detection Limit
Action Levels proposed in Appendix A of 40CFR254.521(a)
Blank Space - Value is below the Method Detection Limit(MDL).
N/A - Not Applicable
(a) - Data reported in ug/L.

# QC DATA
## 187th Fighter Group
## DANNELLY ANG - Montgomery, Alabama [a]

| Client Sample ID | | | | TRAVEL BLANK | TRAVEL BLANK | TRAVEL BLANK | TRAVELBLK2-26 | TRIP BLANK | TRV-02-2-28 |
|---|---|---|---|---|---|---|---|---|---|
| Lab Sample Number | | | | 28998018 | 29046006 | 29017016 | 28909009 | 28891019 | 28934015 |
| Matrix | | | | WATER | WATER | WATER | WATER | WATER | WATER |
| Sample Date | | | | | | | 2/26/91 | | 2/28/91 |
| | MCL | CRDL | Action | | | | | | |
| Semivolatile Compounds | ug/L | ug/L | Levels (ug/L) | | | | | | |
| 1,2-Dichlorobenzene | 600 | 10 | N/A | | | | | | |
| 2-Methylphenol | N/A | 10 | N/A | | | | | | |
| bis(2-Chloroisopropyl)Ether | N/A | 10 | N/A | | | | | | |
| 4-Methylphenol | N/A | 10 | N/A | | | | | | |
| N-Nitroso-di-n-propylamine | N/A | 10 | 0.005 | | | | | | |
| Hexachloroethane | N/A | 10 | 20 | | | | | | |
| Nitrobenzene | N/A | 10 | 20 | | | | | | |
| Isophorone | N/A | 10 | 90 | | | | | | |
| 2-Nitrophenol | N/A | 10 | N/A | | | | | | |
| 2,4-Dimethylphenol | N/A | 50 | N/A | | | | | | |

Notes:

B - Applies to organic data only. Present in the corresponding method blank.
J - Applies to organic data only. Value detected is greater than zero but less than the CRDL.
E - Applies to Gas Chromatography/Mass Spectroscopy data only.
Indicate compound above or below linear range of instrument.
MCL - Maximum Contaminant Level (U.S. Drinking Water Standards)
CRDL - Contract Required Detection Limit
Action Levels proposed in Appendix A of 40CFR254.521(a)
Blank Space - Value is below the Method Detection Limit(MDL).
N/A - Not Applicable
(a) - Data reported in ug/L.

# QC DATA
## 187th Fighter Group
## DANNELLY ANG - Montgomery, Alabama [a]

| Client Sample ID | | | | TRAVEL BLANK | TRAVEL BLANK | TRAVEL BLANK | TRAVELBLK2-26 | TRIP BLANK | TRV-02-2-28 |
|---|---|---|---|---|---|---|---|---|---|
| Lab Sample Number | | | | 28998018 | 29046006 | 29017016 | 28909009 | 28891019 | 28934015 |
| Matrix | | | | WATER | WATER | WATER | WATER | WATER | WATER |
| Sample Date | | | | | | | 2/26/91 | | 2/28/91 |
| Semivolatile Compounds | MCL ug/L | CRDL ug/L | Action Levels (ug/L) | | | | | | |
| Benzoic Acid | N/A | 10 | N/A | | | | | | |
| bis(2-Chloroethoxy)Methane | N/A | 10 | N/A | | | | | | |
| 2,4-Dichlorophenol | N/A | 10 | 100 | | | | | | |
| 1,2,4-Trichlorobenzene | 70 | 10 | 700 | | | | | | |
| 4-Chloroaniline | N/A | 10 | N/A | | | | | | |
| Hexachlorobutadiene | N/A | 10 | 4 | | | | | | |
| 4-Chloro-3-methylphenol | N/A | 10 | N/A | | | | | | |
| 2-Methylnaphthalene | N/A | 10 | N/A | | | | | | |
| Hexachlorocyclopentadiene | N/A | 10 | 200 | | | | | | |
| 2,4,6-Trichlorophenol | N/A | 10 | 3 | | | | | | |

Notes:

B - Applies to organic data only. Present in the corresponding method blank.
J - Applies to organic data only. Value detected is greater than zero but less than the CRDL.
E - Applies to Gas Chromatography/Mass Spectroscopy data only.
Indicate compound above or below linear range of instrument.
MCL - Maximum Contaminant Level (U.S. Drinking Water Standards)
CRDL - Contract Required Detection Limit
Action Levels proposed in Appendix A of 40CFR254.521(a)
Blank Space - Value is below the Method Detection Limit(MDL).
N/A - Not Applicable
(a) - Data reported in ug/L.

# QC DATA
## 187th Fighter Group
## DANNELLY ANG - Montgomery, Alabama [a]

| Client Sample ID | | | | TRAVEL BLANK | TRAVEL BLANK | TRAVEL BLANK | TRAVELBLK2-26 | TRIP BLANK | TRV-02-2-28 |
|---|---|---|---|---|---|---|---|---|---|
| Lab Sample Number | | | | 28998018 | 29046006 | 29017016 | 28909009 | 28891019 | 28934015 |
| Matrix | | | | WATER | WATER | WATER | WATER | WATER | WATER |
| Sample Date | | | | | | | 2/26/91 | | 2/28/91 |
| | MCL | CRDL | Action | | | | | | |
| Semivolatile Compounds | ug/L | ug/L | Levels (ug/L) | | | | | | |
| 2,4,5-Trichlorophenol | N/A | 50 | 4000 | | | | | | |
| 2-Chloronaphthalene | N/A | 10 | N/A | | | | | | |
| 2-Nitroaniline | N/A | 50 | N/A | | | | | | |
| Dimethyl Phthalate | N/A | 10 | N/A | | | | | | |
| Acenaphthylene | N/A | 10 | N/A | | | | | | |
| 2,6-Dinitrotoluene | N/A | 10 | 0.05 | | | | | | |
| 3-Nitroaniline | N/A | 50 | N/A | | | | | | |
| Acenaphthene | N/A | 10 | N/A | | | | | | |
| 2,4-Dintrophenol | N/A | 50 | 70 | | | | | | |
| 4-Nitrophenol | N/A | 50 | N/A | | | | | | |

Notes:

B - Applies to organic data only. Present in the corresponding method blank.
J - Applies to organic data only. Value detected is greater than zero but less than the CRDL.
E - Applies to Gas Chromatography/Mass Spectroscopy data only.
Indicate compound above or below linear range of instrument.
MCL - Maximum Contaminant Level (U.S. Drinking Water Standards)
CRDL - Contract Required Detection Limit
Action Levels proposed in Appendix A of 40CFR254.521(a)
Blank Space - Value is below the Method Detection Limit(MDL).
N/A - Not Applicable
(a) - Data reported in ug/L.

# QC DATA
## 187th Fighter Group
## DANNELLY ANG - Montgomery, Alabama [a]

| Client Sample ID | | | | TRAVEL BLANK | TRAVEL BLANK | TRAVEL BLANK | TRAVELBLK2-26 | TRIP BLANK | TRV-02-2-28 |
|---|---|---|---|---|---|---|---|---|---|
| Lab Sample Number | | | | 28998018 | 29046006 | 29017016 | 28909009 | 28891019 | 28934015 |
| Matrix | | | | WATER | WATER | WATER | WATER | WATER | WATER |
| Sample Date | | | | | | | 2/26/91 | | 2/28/91 |
| | MCL | CRDL | Action | | | | | | |
| Semivolatile Compounds | ug/L | ug/L | Levels (ug/L) | | | | | | |
| Dibenzofuran | N/A | 10 | N/A | | | | | | |
| 2,4-Dinitrotoluene | N/A | 10 | N/A | | | | | | |
| Diethylphthalate | N/A | 10 | 30,000 | | | | | | |
| 4-Chlorophenyl-phenylether | N/A | 10 | N/A | | | | | | |
| Fluorene | N/A | 50 | N/A | | | | | | |
| 4-Nitroaniline | N/A | 50 | N/A | | | | | | |
| 4,6-Dinitro-2-methylphenol | N/A | 50 | N/A | | | | | | |
| 4-Bromophenyl-phenylether | N/A | 10 | N/A | | | | | | |
| Hexachlorobenzene | 1 | 10 | N/A | | | | | | |
| Pentachlorophenol | 1 | 50 | 1000 | | | | | | |

Notes:

B - Applies to organic data only. Present in the corresponding method blank.
J - Applies to organic data only. Value detected is greater than zero but less than the CRDL.
E - Applies to Gas Chromatography/Mass Spectroscopy data only.
Indicate compound above or below linear range of instrument.
MCL - Maximum Contaminant Level (U.S. Drinking Water Standards)
CRDL - Contract Required Detection Limit
Action Levels proposed in Appendix A of 40CFR254.521(a)
Blank Space - Value is below the Method Detection Limit(MDL).
N/A - Not Applicable
(a) - Data reported in ug/L.

# QC DATA
## 187th Fighter Group
## DANNELLY ANG - Montgomery, Alabama [a]

| Client Sample ID | | | | TRAVEL BLANK | TRAVEL BLANK | TRAVEL BLANK | TRAVELBLK2-26 | TRIP BLANK | TRV-02-2-28 |
|---|---|---|---|---|---|---|---|---|---|
| Lab Sample Number | | | | 28998018 | 29046006 | 29017016 | 28909009 | 28891019 | 28934015 |
| Matrix | | | | WATER | WATER | WATER | WATER | WATER | WATER |
| Sample Date | | | | | | | 2/26/91 | | 2/28/91 |
| | MCL | CRDL | Action | | | | | | |
| Semivolatile Compounds | ug/L | ug/L | Levels (ug/L) | | | | | | |
| Phenanthrene | N/A | 10 | N/A | | | | | | |
| Anthracene | N/A | 10 | N/A | | | | | | |
| Fluoranthene | N/A | 10 | N/A | | | | | | |
| Pyrene | N/A | 10 | N/A | | | | | | |
| Butylbenzylphthalate | N/A | 10 | 7,000 | | | | | | |
| 3,3'-Dichlorobenzidine | N/A | 20 | 0.08 | | | | | | |
| Benzo(a)anthracene | 0.1 | 10 | N/A | | | | | | |
| Chrysene | 0.2 | 10 | N/A | | | | | | |
| Di-n-octylphthalate | N/A | 10 | N/A | | | | | | |
| Benzo(b)fluoranthene | 0.2 | 10 | N/A | | | | | | |

Notes:

B - Applies to organic data only. Present in the corresponding method blank.
J - Applies to organic data only. Value detected is greater than zero but less than the CRDL.
E - Applies to Gas Chromatography/Mass Spectroscopy data only.
Indicate compound above or below linear range of instrument.
MCL - Maximum Contaminant Level (U.S. Drinking Water Standards)
CRDL - Contract Required Detection Limit
Action Levels proposed in Appendix A of 40CFR254.521(a)
Blank Space - Value is below the Method Detection Limit(MDL).
N/A - Not Applicable
(a) - Data reported in ug/L.

# QC DATA
## 187th Fighter Group
## DANNELLY ANG - Montgomery, Alabama [a]

| Client Sample ID | | | | TRAVEL BLANK | TRAVEL BLANK | TRAVEL BLANK | TRAVELBLK2-26 | TRIP BLANK | TRV-02-2-28 |
|---|---|---|---|---|---|---|---|---|---|
| Lab Sample Number | | | | 28998018 | 29046006 | 29017016 | 28909009 | 28891019 | 28934015 |
| Matrix | | | | WATER | WATER | WATER | WATER | WATER | WATER |
| Sample Date | | | | | | | 2/26/91 | | 2/28/91 |
| Semivolatile Compounds | MCL ug/L | CRDL ug/L | Action Levels (ug/L) | | | | | | |
| Benzo(k)fluoranthene | 0.2 | 10 | N/A | | | | | | |
| Benzo(a)pyrene | 0.2 | 10 | N/A | | | | | | |
| Indeno(1,2,3-cd)Pyrene | 0.4 | 10 | N/A | | | | | | |
| Dibenz(a,h)Anthracene | 0.3 | 10 | N/A | | | | | | |
| benzo(g,h,i)perylene | N/A | 10 | N/A | | | | | | |

Notes:

B - Applies to organic data only. Present in the corresponding method blank.
J - Applies to organic data only. Value detected is greater than zero but less than the CRDL.
E - Applies to Gas Chromatography/Mass Spectroscopy data only.
Indicate compound above or below linear range of instrument.
MCL - Maximum Contaminant Level (U.S. Drinking Water Standards)
CRDL - Contract Required Detection Limit
Action Levels proposed in Appendix A of 40CFR254.521(a)
Blank Space - Value is below the Method Detection Limit(MDL).
N/A - Not Applicable
(a) - Data reported in ug/L.

# QC DATA
## 187th Fighter Group
## DANNELLY ANG - Montgomery, Alabama [a]

| Client Sample ID | | | | EQUIPMENT | ERB05-3-6 DUP | ERB05-3-6 MS | ERB-01-2-26 | ERB-02-2-27 | ERB-03-2-28 | ERB-04-3-5 | ERB-05-3-6 |
|---|---|---|---|---|---|---|---|---|---|---|---|
| Lab Sample Number | | | | 17894020 | 29017P15 | 29017M15 | 28909010 | 28922004 | 28934014 | 28998017 | 29017015 |
| Matrix | | | | WATER | WATER | WATER | WATER | WATER | WATER | WATER | WATER |
| Sample Date | | | | | 3/6/91 | 3/6/91 | 2/26/91 | 2/27/91 | 2/28/91 | 3/5/91 | 3/6/91 |
| Semivolatile Compounds | MCL ug/L | CRDL ug/L | Action Levels (ug/L) | | | | | | | | |
| Di-n-butylphthalate | N/A | 10 | N/A | | | | | | | | |
| N-Nitrosodiphenylamine(1) | N/A | 10 | N/A | | | | 2 BJ | 3 J | | | |
| Naphthalene | N/A | 10 | N/A | | | | | | | | |
| bis(2-Ethylhexyl)phthalate | N/A | 10 | 3 | | | | | 10 | | | 5 BJ |
| Phenol | N/A | 10 | 20,000 | | | | | | | | |
| bis(2-Chloroethyl)Ether | N/A | 10 | 0.03 | | | | | | | | |
| 2-Chlorophenol | N/A | 10 | 200 | | | | | | | | |
| 1,3-Dichlorobenzene | 600 | 10 | N/A | | | | | | | | |
| 1,4-Dichlorobenzene | 750 | 10 | N/A | | | | | | | | |
| Benzyl Alcohol | N/A | 10 | N/A | | | | | | | | |

Notes:

B - Applies to organic data only. Present in the corresponding method blank.
J - Applies to organic data only. Value detected is greater than zero but less than the CRDL.
E - Applies to Gas Chromatography/Mass Spectroscopy data only.
Indicate compound above or below linear range of instrument.
MCL - Maximum Contaminant Level (U.S. Drinking Water Standards)
CRDL - Contract Required Detection Limit
Action Levels proposed in Appendix A of 40CFR254.521(a)
Blank Space - Value is below the Method Detection Limit(MDL).
N/A - Not Applicable
(a) - Data reported in ug/L.

# QC DATA
## 187th Fighter Group
## DANNELLY ANG - Montgomery, Alabama [a]

| Client Sample ID | | | | EQUIPMENT | ERB05-3-6 DUP | ERB05-3-6 MS | ERB-01-2-26 | ERB-02-2-27 | ERB-03-2-28 | ERB-04-3-5 | ERB-05-3-6 |
|---|---|---|---|---|---|---|---|---|---|---|---|
| Lab Sample Number | | | | 17894020 | 29017P15 | 29017M15 | 28909010 | 28922004 | 28934014 | 28998017 | 29017015 |
| Matrix | | | | WATER | WATER | WATER | WATER | WATER | WATER | WATER | WATER |
| Sample Date | | | | | 3/6/91 | 3/6/91 | 2/26/91 | 2/27/91 | 2/28/91 | 3/5/91 | 3/6/91 |
| | MCL | CRDL | Action | | | | | | | | |
| Semivolatile Compounds | ug/L | ug/L | Levels (ug/L) | | | | | | | | |
| 1,2-Dichlorobenzene | 600 | 10 | N/A | | | | | | | | |
| 2-Methylphenol | N/A | 10 | N/A | | | | | | | | |
| bis(2-Chloroisopropyl)Ether | N/A | 10 | N/A | | | | | | | | |
| 4-Methylphenol | N/A | 10 | N/A | | | | | | | | |
| N-Nitroso-di-n-propylamine | N/A | 10 | 0.005 | | | | | | | | |
| Hexachloroethane | N/A | 10 | 20 | | | | | | | | |
| Nitrobenzene | N/A | 10 | 20 | | | | | | | | |
| Isophorone | N/A | 10 | 90 | | | | | | | | |
| 2-Nitrophenol | N/A | 10 | N/A | | | | | | | | |
| 2,4-Dimethylphenol | N/A | 50 | N/A | | | | | | | | |

Notes:

B - Applies to organic data only. Present in the corresponding method blank.
J - Applies to organic data only. Value detected is greater than zero but less than the CRDL.
E - Applies to Gas Chromatography/Mass Spectroscopy data only.
Indicate compound above or below linear range of instrument.
MCL - Maximum Contaminant Level (U.S. Drinking Water Standards)
CRDL - Contract Required Detection Limit
Action Levels proposed in Appendix A of 40CFR254.521(a)
Blank Space - Value is below the Method Detection Limit(MDL).
N/A - Not Applicable
(a) - Data reported in ug/L.

# QC DATA
## 187th Fighter Group
## DANNELLY ANG - Montgomery, Alabama[a]

| Client Sample ID | | | | EQUIPMENT | ERB05-3-6 DUP | ERB05-3-6 MS | ERB-01-2-26 | ERB-02-2-27 | ERB-03-2-28 | ERB-04-3-5 | ERB-05-3-6 |
|---|---|---|---|---|---|---|---|---|---|---|---|
| Lab Sample Number | | | | 17894020 | 29017P15 | 29017M15 | 28909010 | 28922004 | 28934014 | 28998017 | 29017015 |
| Matrix | | | | WATER | WATER | WATER | WATER | WATER | WATER | WATER | WATER |
| Sample Date | | | | | 3/6/91 | 3/6/91 | 2/26/91 | 2/27/91 | 2/28/91 | 3/5/91 | 3/6/91 |
| Semivolatile Compounds | MCL ug/L | CRDL ug/L | Action Levels (ug/L) | | | | | | | | |
| Benzoic Acid | N/A | 10 | N/A | | | | | | | | |
| bis(2-Chloroethoxy)Methane | N/A | 10 | N/A | | | | | | | | |
| 2,4-Dichlorophenol | N/A | 10 | 100 | | | | | | | | |
| 1,2,4-Trichlorobenzene | 70 | 10 | 700 | | | | | | | | |
| 4-Chloroaniline | N/A | 10 | N/A | | | | | | | | |
| Hexachlorobutadiene | N/A | 10 | 4 | | | | | | | | |
| 4-Chloro-3-methylphenol | N/A | 10 | N/A | | | | | | | | |
| 2-Methylnaphthalene | N/A | 10 | N/A | | | | | | | | |
| Hexachlorocyclopentadiene | N/A | 10 | 200 | | | | | | | | |
| 2,4,6-Trichlorophenol | N/A | 10 | 3 | | | | | | | | |

Notes:

B - Applies to organic data only. Present in the corresponding method blank.
J - Applies to organic data only. Value detected is greater than zero but less than the CRDL.
E - Applies to Gas Chromatography/Mass Spectroscopy data only.
Indicate compound above or below linear range of instrument.
MCL - Maximum Contaminant Level (U.S. Drinking Water Standards)
CRDL - Contract Required Detection Limit
Action Levels proposed in Appendix A of 40CFR254.521(a)
Blank Space - Value is below the Method Detection Limit(MDL).
N/A - Not Applicable
(a) - Data reported in ug/L.

# QC DATA
## 187th Fighter Group
## DANNELLY ANG - Montgomery, Alabama [a]

| Client Sample ID | | | | EQUIPMENT | ERB05-3-6 DUP | ERB05-3-6 MS | ERB-01-2-26 | ERB-02-2-27 | ERB-03-2-28 | ERB-04-3-5 | ERB-05-3-6 |
|---|---|---|---|---|---|---|---|---|---|---|---|
| Lab Sample Number | | | | 17894020 | 29017P15 | 29017M15 | 28909010 | 28922004 | 28934014 | 28998017 | 29017015 |
| Matrix | | | | WATER | WATER | WATER | WATER | WATER | WATER | WATER | WATER |
| Sample Date | | | | | 3/6/91 | 3/6/91 | 2/26/91 | 2/27/91 | 2/28/91 | 3/5/91 | 3/5/91 |
| | MCL | CRDL | Action | | | | | | | | |
| Semivolatile Compounds | ug/L | ug/L | Levels (ug/L) | | | | | | | | |
| 2,4,5-Trichlorophenol | N/A | 50 | 4000 | | | | | | | | |
| 2-Chloronaphthalene | N/A | 10 | N/A | | | | | | | | |
| 2-Nitroaniline | N/A | 50 | N/A | | | | | | | | |
| Dimethyl Phthalate | N/A | 10 | N/A | | | | | | | | |
| Acenaphthylene | N/A | 10 | N/A | | | | | | | | |
| 2,6-Dinitrotoluene | N/A | 10 | 0.05 | | | | | | | | |
| 3-Nitroaniline | N/A | 50 | N/A | | | | | | | | |
| Acenaphthene | N/A | 10 | N/A | | | | | | | | |
| 2,4-Dintrophenol | N/A | 50 | 70 | | | | | | | | |
| 4-Nitrophenol | N/A | 50 | N/A | | | | | | | | |

Notes:

B - Applies to organic data only. Present in the corresponding method blank.
J - Applies to organic data only. Value detected is greater than zero but less than the CRDL.
E - Applies to Gas Chromatography/Mass Spectroscopy data only.
Indicate compound above or below linear range of instrument.
MCL - Maximum Contaminant Level (U.S. Drinking Water Standards)
CRDL - Contract Required Detection Limit
Action Levels proposed in Appendix A of 40CFR254.521(a)
Blank Space - Value is below the Method Detection Limit(MDL).
N/A - Not Applicable
(a) - Data reported in ug/L.

# QC DATA
## 187th Fighter Group
## DANNELLY ANG - Montgomery, Alabama [a]

| Client Sample ID | | | | EQUIPMENT | ERB05-3-6 DUP | ERB05-3-6 MS | ERB-01-2-26 | ERB-02-2-27 | ERB-03-2-28 | ERB-04-3-5 | ERB-05-3-6 |
|---|---|---|---|---|---|---|---|---|---|---|---|
| Lab Sample Number | | | | 17894020 | 29017P15 | 29017M15 | 28909010 | 28922004 | 28934014 | 28998017 | 29017015 |
| Matrix | | | | WATER | WATER | WATER | WATER | WATER | WATER | WATER | WATER |
| Sample Date | | | | | 3/6/91 | 3/6/91 | 2/26/91 | 2/27/91 | 2/28/91 | 3/5/91 | 3/6/91 |
| | MCL | CRDL | Action | | | | | | | | |
| Semivolatile Compounds | ug/L | ug/L | Levels (ug/L) | | | | | | | | |
| Dibenzofuran | N/A | 10 | N/A | | | | | | | | |
| 2,4-Dinitrotoluene | N/A | 10 | N/A | | | | | | | | |
| Diethylphthalate | N/A | 10 | 30,000 | | | | | | | | |
| 4-Chlorophenyl-phenylether | N/A | 10 | N/A | | | | | | | | |
| Fluorene | N/A | 50 | N/A | | | | | | | | |
| 4-Nitroaniline | N/A | 50 | N/A | | | | | | | | |
| 4,6-Dinitro-2-methylphenol | N/A | 50 | N/A | | | | | | | | |
| 4-Bromophenyl-phenylether | N/A | 10 | N/A | | | | | | | | |
| Hexachlorobenzene | 1 | 10 | N/A | | | | | | | | |
| Pentachlorophenol | 1 | 50 | 1000 | | | | | | | | |

Notes:

B - Applies to organic data only. Present in the corresponding method blank.
J - Applies to organic data only. Value detected is greater than zero but less than the CRDL.
E - Applies to Gas Chromatography/Mass Spectroscopy data only.
Indicate compound above or below linear range of instrument.
MCL - Maximum Contaminant Level (U.S. Drinking Water Standards)
CRDL - Contract Required Detection Limit
Action Levels proposed in Appendix A of 40CFR254.521(a)
Blank Space - Value is below the Method Detection Limit(MDL).
N/A - Not Applicable
(a) - Data reported in ug/L.

# QC DATA
## 187th Fighter Group
## DANNELLY ANG - Montgomery, Alabama [a]

| Client Sample ID | | | | EQUIPMENT | ERB05-3-6 DUP | ERB05-3-6 MS | ERB-01-2-26 | ERB-02-2-27 | ERB-03-2-28 | ERB-04-3-5 | ERB-05-3-6 |
|---|---|---|---|---|---|---|---|---|---|---|---|
| Lab Sample Number | | | | 17894020 | 29017P15 | 29017M15 | 28909010 | 28922004 | 28934014 | 28998017 | 29017015 |
| Matrix | | | | WATER | WATER | WATER | WATER | WATER | WATER | WATER | WATER |
| Sample Date | | | | | 3/6/91 | 3/6/91 | 2/26/91 | 2/27/91 | 2/28/91 | 3/5/91 | 3/6/91 |
| Semivolatile Compounds | MCL ug/L | CRDL ug/L | Action Levels (ug/L) | | | | | | | | |
| Phenanthrene | N/A | 10 | N/A | | | | | | | | |
| Anthracene | N/A | 10 | N/A | | | | | | | | |
| Fluoranthene | N/A | 10 | N/A | | | | | | | | |
| Pyrene | N/A | 10 | N/A | | | | | | | | |
| Butylbenzylphthalate | N/A | 10 | 7,000 | | | | | | | | |
| 3,3'-Dichlorobenzidine | N/A | 20 | 0.08 | | | | | | | | |
| Benzo(a)anthracene | 0.1 | 10 | N/A | | | | | | | | |
| Chrysene | 0.2 | 10 | N/A | | | | | | | | |
| Di-n-octylphthalate | N/A | 10 | N/A | | | | | | | | |
| Benzo(b)fluoranthene | 0.2 | 10 | N/A | | | | | | | | |

Notes:

B - Applies to organic data only. Present in the corresponding method blank.
J - Applies to organic data only. Value detected is greater than zero but less than the CRDL.
E - Applies to Gas Chromatography/Mass Spectroscopy data only.
Indicate compound above or below linear range of instrument.
MCL - Maximum Contaminant Level (U.S. Drinking Water Standards)
CRDL - Contract Required Detection Limit
Action Levels proposed in Appendix A of 40CFR254.521(a)
Blank Space - Value is below the Method Detection Limit(MDL).
N/A - Not Applicable
(a) - Data reported in ug/L.

# QC DATA
## 187th Fighter Group
## DANNELLY ANG - Montgomery, Alabama [a]

| Client Sample ID | | | | EQUIPMENT | ERB05-3-6 DUP | ERB05-3-6 MS | ERB-01-2-26 | ERB-02-2-27 | ERB-03-2-28 | ERB-04-3-5 | ERB-05-3-6 |
|---|---|---|---|---|---|---|---|---|---|---|---|
| Lab Sample Number | | | | 17894020 | 29017P15 | 29017M15 | 28909010 | 28922004 | 28934014 | 28998017 | 29017015 |
| Matrix | | | | WATER | WATER | WATER | WATER | WATER | WATER | WATER | WATER |
| Sample Date | | | | | 3/6/91 | 3/6/91 | 2/26/91 | 2/27/91 | 2/28/91 | 3/5/91 | 3/6/91 |
| | MCL | CRDL | Action | | | | | | | | |
| Semivolatile Compounds | ug/L | ug/L | Levels (ug/L) | | | | | | | | |
| Benzo(k)fluoranthene | 0.2 | 10 | N/A | | | | | | | | |
| Benzo(a)pyrene | 0.2 | 10 | N/A | | | | | | | | |
| Indeno(1,2,3-cd)Pyrene | 0.4 | 10 | N/A | | | | | | | | |
| Dibenz(a,h)Anthracene | 0.3 | 10 | N/A | | | | | | | | |
| benzo(g,h,i)perylene | N/A | 10 | N/A | | | | | | | | |

Notes:

B - Applies to organic data only. Present in the corresponding method blank.
J - Applies to organic data only. Value detected is greater than zero but less than the CRDL.
E - Applies to Gas Chromatography/Mass Spectroscopy data only.
Indicate compound above or below linear range of instrument.
MCL - Maximum Contaminant Level (U.S. Drinking Water Standards)
CRDL - Contract Required Detection Limit
Action Levels proposed in Appendix A of 40CFR254.521(a)
Blank Space - Value is below the Method Detection Limit(MDL).
N/A - Not Applicable
(a) - Data reported in ug/L.

# QC DATA
## 187th Fighter Group
## DANNELLY ANG - Montgomery, Alabama [a]

| Client Sample ID | | | | EQUIPMENT | ERB05-3-6 DUP | ERB05-3-6 MS | ERB-01-2-26 | ERB-02-2-27 | ERB-03-2-28 | ERB-04-3-5 | ERB-05-3-6 |
|---|---|---|---|---|---|---|---|---|---|---|---|
| Lab Sample Number | | | | 17894020 | 29017P15 | 29017M15 | 28909010 | 28922004 | 28934014 | 28998017 | 29017015 |
| Matrix | | | | WATER | WATER (c) | WATER (d) | WATER | WATER | WATER | WATER | WATER |
| Sample Date | | | | | 3/6/91 | 3/6/91 | 2/26/91 | 2/27/91 | 2/28/91 | 3/5/91 | 3/6/91 |
| Inorganics | MCL ug/L | CRDL ug/L | Action Level (ug/L) | | | | | | | | |
| Antimony | 6 | 60 | 10 | | N/C | 93.1 | | | | | |
| Arsenic | 50 | 10 | 50 | | N/C | 99.9 | | | | | |
| Barium | 2,000 | 200 | 1000 | | N/C | 103.4 | | 3.7 B | | | |
| Cadmium | 5 | 5 | 10 | | N/C | 86.8 | | | | | |
| Chromium | 100 | 10 | 50 | | N/C | 100.6 | | | | | |
| Copper | 1,300 | 25 | 200 | | N/C | 97.0 | 2.4 B | 72.1 | | | |
| Lead | 15 | 3 | 50 | | N/C | 92.0 | | 21.9 | | | |
| Mercury | 2 | 0.2 | 2 | | N/C | 109.0 | | | | | |
| Nickel | 100 | 40 | 700 | | N/C | 98.6 | | | | | |
| Selenium | 50 | 5 | 10 | | N/C | 89.6 | | | | | |
| Silver | N/A | 10 | 50 | | N/C | 92.8 | | | | | |
| Thallium | 2 | 10 | 3 | | N/C | 100.2 | | | | | |
| Zinc | N/A | 20 | 2000 | | N/C | 95.8 | 5.0 B | 50.1 | | | 2.6 B |

Notes:

B - Value detected is less than the CRDL but greater than or equal to the MDL.
MCL - Maximum Contaminant Level (U.S. Drinking Water Standards)
CRDL - Contract Required Detection Limit
Action Levels proposed in Appendix A of 40CFR254.521(a)
Blank Space - Value is below the Method Detection Limit(MDL).
N/C - No Change in the RPD
(c) - Relative Percent Difference(RPD) for duplicate samples.
(d) - Percent Recovery(%R) for Matrix Spike(MS) samples.
(a) - Data reported in ug/L.

# QC DATA
## 187th Fighter Group
## DANNELLY ANG - Montgomery, Alabama [a]

| Client Sample ID | | | | ERB-06-3-7 | ERB-07-3-8 | ER-1 | FB-01-3-4 | FB-02-3-7 | FB-03-3-7 | TRAVEL BLANK | TRAVEL BLANK |
|---|---|---|---|---|---|---|---|---|---|---|---|
| Lab Sample Number | | | | 29041001 | 29046005 | 28891020 | 28973001 | 29032002 | 29032001 | 29032003 | 28973002 |
| Matrix | | | | WATER | WATER | WATER | WATER | WATER | WATER | WATER | WATER |
| Sample Date | | | | 3/7/91 | 3/8/91 | | 3/4/91 | 3/7/91 | 3/7/91 | | |
| Inorganics | MCL ug/L | CRDL ug/L | Action Level (ug/L) | | | | | | | | |
| Antimony | 6 | 60 | 10 | | | | | | | | |
| Arsenic | 50 | 10 | 50 | | | | | | | | |
| Barium | 2,000 | 200 | 1000 | | | | | 35.2 B | | | |
| Cadmium | 5 | 5 | 10 | | | | | | | | |
| Chromium | 100 | 10 | 50 | | | | | | | | |
| Copper | 1,300 | 25 | 200 | | | | 51.2 | 22.9 B | | | |
| Lead | 15 | 3 | 50 | | | | 1.5 B | 2.1 B | 1.3 B | | |
| Mercury | 2 | 0.2 | 2 | | | | | | | | |
| Nickel | 100 | 40 | 700 | | | | | | | | |
| Selenium | 50 | 5 | 10 | | | | | | | | |
| Silver | N/A | 10 | 50 | | | | | | | | |
| Thallium | 2 | 10 | 3 | | | | | | | | |
| Zinc | N/A | 20 | 2000 | | | | 4.2 B | 3.1 B | 3.0 B | | |

Notes:

B - Value detected is less than the CRDL but greater than or equal to the MDL.
MCL - Maximum Contaminant Level (U.S. Drinking Water Standards)
CRDL - Contract Required Detection Limit
Action Levels proposed in Appendix A of 40CFR254.521(a)
Blank Space - Value is below the Method Detection Limit(MDL).
N/C - No Change in the RPD
(c) - Relative Percent Difference(RPD) for duplicate samples.
(d) - Percent Recovery(%R) for Matrix Spike(MS) samples.
(a) - Data reported in ug/L.

# QC DATA
## 187th Fighter Group
## DANNELLY ANG - Montgomery, Alabama [a]

| Client Sample ID | | | | TRAVEL BLANK | TRAVEL BLANK | TRAVEL BLANK | TRAVELBLK2-26 | TRIP BLANK | TRV-02-2-28 |
|---|---|---|---|---|---|---|---|---|---|
| Lab Sample Number | | | | 28998018 | 29046006 | 29017016 | 28909009 | 28891019 | 28934015 |
| Matrix | | | | WATER | WATER | WATER | WATER | WATER | WATER |
| Sample Date | | | | | | | 2/26/91 | | 2/28/91 |
| Inorganics | MCL ug/L | CRDL ug/L | Action Level (ug/L) | | | | | | |
| Antimony | 6 | 60 | 10 | | | | | | |
| Arsenic | 50 | 10 | 50 | | | | | | |
| Barium | 2,000 | 200 | 1000 | | | | | | |
| Cadmium | 5 | 5 | 10 | | | | | | |
| Chromium | 100 | 10 | 50 | | | | | | |
| Copper | 1,300 | 25 | 200 | | | | | | |
| Lead | 15 | 3 | 50 | | | | | | |
| Mercury | 2 | 0.2 | 2 | | | | | | |
| Nickel | 100 | 40 | 700 | | | | | | |
| Selenium | 50 | 5 | 10 | | | | | | |
| Silver | N/A | 10 | 50 | | | | | | |
| Thallium | 2 | 10 | 3 | | | | | | |
| Zinc | N/A | 20 | 2000 | | | | | | |

Notes:

B - Value detected is less than the CRDL but greater than or equal to the MDL.
MCL - Maximum Contaminant Level (U.S. Drinking Water Standards)
CRDL - Contract Required Detection Limit
Action Levels proposed in Appendix A of 40CFR254.521(a)
Blank Space - Value is below the Method Detection Limit(MDL).
N/C - No Change in the RPD
(c) - Relative Percent Difference(RPD) for duplicate samples.
(d) - Percent Recovery(%R) for Matrix Spike(MS) samples.
(a) - Data reported in ug/L.

# Appendix D
# SOIL BORING LOGS

CH2M HILL

| PROJECT NUMBER | BORING NUMBER | |
|---|---|---|
| MGM27526.SI.FK | B1PS | SHEET 1 OF 1 |

# SOIL BORING LOG

PROJECT Dannelly ANG LOCATION Background

ELEVATION 206.2'(Gr.), 206.04'(TOC) DRILLING CONTRACTOR Kilman Bros./Stone Mt., GA

DRILLING METHOD AND EQUIPMENT 3¼" ID HSA, CME 75

WATER LEVELS START 2/26/91 (1020) FINISH 2/26/91 (1120hrs) LOGGER B. Carlisle

| DEPTH BELOW SURFACE (FT) | SAMPLE INTERVAL | SAMPLE NUMBER AND TYPE | SAMPLE RECOVERY (FT) | STANDARD PENETRATION TEST RESULTS 6"-6"-6" (N) | SOIL DESCRIPTION: SOIL NAME, USCS GROUP SYMBOL, COLOR, MOISTURE CONTENT, RELATIVE DENSITY OR CONSISTENCY, SOIL STRUCTURE, MINERALOGY | COMMENTS: DEPTH OF CASING, DRILLING RATE, DRILLING FLUID LOSS, TESTS AND INSTRUMENTATION |
|---|---|---|---|---|---|---|
| | 1.5 | 1S | 0.8 | 5-5-7-7 (12) | Fat Clay (CH) - Reddish brown-orange, moist, stiff, upper 0.2' | Chem. Analysis (1S) |
| | 5.0 | 2S | 1.5 | 5-6-6 (12) | Silty Clay (CL-ML) Mottled brown-orange w/tan, moist, stiff | |
| 5 | | | | | | |
| | 10 | 3S | 1.5 | 8-11-14 (25) | Silty Clay (CL-ML) Mottled brown-tan, moist, v. stiff | Chem. Analysis (3S) |
| 10 | | | | | | |
| | 15 | 4S | 1.5 | 6-7-15 (22) | Silty Clay (CL-ML) Similar to 3S, lower 0.5' is Chalk- Lt. grey to Lt. brown, silty | |
| 15 | | | | | | |
| | 20 | 5S | 1.5 | 22-45-50/4 (95) | Chalk - Olive green to brown with grey, moist, hard, micaceous, silty | Chem. Analysis (5S)<br>Dup. Sample on BTEX<br>Dup. Sample on TPH |
| 20 | | | | | Boring Terminated @ 20' BGS<br>Installed 5' 1.25" pvc screen and 15' 1.25" pvc casing. Added 7' graded sandpack, 2' bentonite seal, and grouted annulus to surface (0'-11').<br><br>Flush-grade piezometer completed with steel cover and locking cap. | Boring terminated @ 1120 hrs. |



REV 11/89 FORM D1586

CH2M HILL

| PROJECT NUMBER | BORING NUMBER | |
|---|---|---|
| MGM27526.SI.FK | B2PS | SHEET 1 OF 1 |

# SOIL BORING LOG

PROJECT Dannelly ANG LOCATION Background

ELEVATION 206.4'(Gr.), 206.23'(TOC) DRILLING CONTRACTOR Kilman Bros./Stone Mt. GA

DRILLING METHOD AND EQUIPMENT 3¼" ID HSA, CME 75

WATER LEVELS START 2/26/91 (1255hrs) FINISH 2/26/91 (1310hrs) LOGGER B. Carlisle

| DEPTH BELOW SURFACE (FT) | SAMPLE INTERVAL | SAMPLE NUMBER AND TYPE | SAMPLE RECOVERY (FT) | STANDARD PENETRATION TEST RESULTS 6"-6"-6" (N) | SOIL DESCRIPTION: SOIL NAME, USCS GROUP SYMBOL, COLOR, MOISTURE CONTENT, RELATIVE DENSITY OR CONSISTENCY, SOIL STRUCTURE, MINERALOGY | COMMENTS: DEPTH OF CASING, DRILLING RATE, DRILLING FLUID LOSS, TESTS AND INSTRUMENTATION |
|---|---|---|---|---|---|---|
| | | | | | | Boring B2PS is nexted with B1PS, therefore soil was analyzed in B1PS. |
| 5 | 5 | 1S | 1.5 | 6-8-9 (17) | Silty Clay (CL-ML)-Brown-tan mottled, moist, v. stiff | |
| 10 | 10 | 2S | 1.5 | 9-15-19 (30) | Silty-Clay (CL-ML)-Similar to 1S | |
| | | | | | Boring terminated @ 10' bgs Installed 5 ft of 1.25" pvc screens and 5 ft of 1.25" pvc casing. Added 7' graded sandpack, 2' bentonite seal, and grouted remaining annulus to surface (0'-1'). Flush-grade piezometer completed with steel cover and locking cap. | Boring terminated @ 1310 hrs |



REV 11/89 FORM D1586

| PROJECT NUMBER | BORING NUMBER | |
|---|---|---|
| MGM27526.SI.FK | B3PS | SHEET 1 OF 1 |

# SOIL BORING LOG

PROJECT Dannelly ANG LOCATION Background

ELEVATION 208.5'(Gr.), 208.31(TOC) DRILLING CONTRACTOR Kilman Bros./Stone Mt. GA

DRILLING METHOD AND EQUIPMENT HSA, 3¼" ID, CME 75

WATER LEVELS START 2-27-91 (1330 hrs) FINISH 2-27-91 (1440 hrs) LOGGER B. Carlisle

| DEPTH BELOW SURFACE (FT) | SAMPLE INTERVAL | SAMPLE NUMBER AND TYPE | SAMPLE RECOVERY (FT) | STANDARD PENETRATION TEST RESULTS 6"-6"-6" (N) | SOIL DESCRIPTION: SOIL NAME, USCS GROUP SYMBOL, COLOR, MOISTURE CONTENT, RELATIVE DENSITY OR CONSISTENCY, SOIL STRUCTURE, MINERALOGY | COMMENTS: DEPTH OF CASING, DRILLING RATE, DRILLING FLUID LOSS, TESTS AND INSTRUMENTATION |
|---|---|---|---|---|---|---|
| 2 | 2 | 1S | 0.5 | 14-6-4 (10) | Asphalt/Sand with Gravel - Road and fill material | Asphalt noted in sample-Not submitted for analysis |
| 5 | 5 | 2S | 0.8 | 3-4-5 (9) | Poorly Graded Sand w/Gravel (Fill matl.) Brown-black, dry, loose, gravel approx. 4mm. | Sample not submitted for analysis due to possible asphalt content in fill material |
| 10 | 10 | 3S | 1.5 | 5-6-10 (16) | Silty Clay (CL-ML) - Lt. Brown-lt. grey, moist, v. stiff, micaceous, slightly chalky (area the red), contains calcareous gravel in thin lenses | Chemical analysis (3S) |
| 15 | 15 | 4S | 1.5 | 10-19-17 (36) | Silty Clay (CL-ML) Similar to 3S hard | Chemical analysis (4S) |
| 20 | 20 | 5S | 1.5 | 11-12-15 (27) | Silty Clay (CL-ML) Similar to 3S except lower 0.2' contains chalk, greenish-grey, micaceous | Boring terminated @ 30' BGS Installed 10' of 1.25" pvc screen and 20' of 1.25" pvc casing. Added 12.5' sandpack, 2' bentonite seal, and grouted annulus to surface (0'-15.5'). Flush grade piezometer completed with steel cover and locking cap. |
| 25 | 25 | 6S | 1.5 | 10-10-16 (26) | Silty Clay (CL-ML) Mottled tan-lt. grey, moist, v. stiff, lower 0.5' is greenish-grey Chalk | |
| | 30 | 7S | 1.5 | 16-30-50/4 (80) | Chalk - Olive-green to grey, moist hard, calcareous gravel 2-4mm | Chemical Analysis (7S) |

| PROJECT NUMBER | BORING NUMBER | |
|---|---|---|
| MGM27526.SI.FK | B5PS | SHEET 1 OF 1 |

# SOIL BORING LOG

PROJECT Dannelly ANG LOCATION Background

ELEVATION 198.3'(Gr), 198.05'TOC DRILLING CONTRACTOR Kilman Bros./Stone Mt. GA

DRILLING METHOD AND EQUIPMENT 3¼" ID HSA, CME 75

WATER LEVELS START 2-26-91 (1505) FINISH 2-26-91 (1650) LOGGER B. Carlisle

| DEPTH BELOW SURFACE (FT) | SAMPLE INTERVAL | SAMPLE NUMBER AND TYPE | SAMPLE RECOVERY (FT) | STANDARD PENETRATION TEST RESULTS 6"-6"-6" (N) | SOIL DESCRIPTION: SOIL NAME, USCS GROUP SYMBOL, COLOR, MOISTURE CONTENT, RELATIVE DENSITY OR CONSISTENCY, SOIL STRUCTURE, MINERALOGY | COMMENTS: DEPTH OF CASING, DRILLING RATE, DRILLING FLUID LOSS, TESTS AND INSTRUMENTATION |
|---|---|---|---|---|---|---|
| | 2 | 1S | 0.9 | 5-6-65 (12) | Silty Clay (CL-ML) Reddish brown, moist, stiff | Chem. Analysis (1S) |
| 5 | 5 | 2S | 1.5 | 5-3-4 (7) | Silty Clay with Sand (CL-ML) Mottled reddish brown-tan, moist, firm | |
| 10 | 10 | 3S | 1.2 | 3-4-6 (10) | Fat Clay with Sand (CH) Mottled reddish brown, moist, stiff | Chem. Analysis (3S) |
| 15 | 15 | 4S | 1.5 | 3-4-4 (8) | Fat Clay with Sand (CH) Similar to 3S - lower 0.5' becomes Chalky, lt. grey-lt. brown, ferruginous, micaceous | |
| 20 | 20 | 5S | 1.5 | 6-19-19 (38) | Silty Clay (CL-ML) Mottled lt. brown-lt. grey, moist, hard, chalky, micaceous | |
| 25 | 25 | 6S | 1.2 | 12-19-30 (49) | Silty Clay (CL-ML) Lt. brown-lt. grey, mottled, moist, hard, chalky, lower 0.2' is Chalk- olive-green to grey, moist, hard | Chem. Analysis (6S)<br>Boring terminated at 30' bgs Installed 5' of 1.25" pvc screen and 25' of 1.25" pvc casing. Added 7' graded sandpack, 2' bentonite seal, and grouted annulus to surface (0-21').<br>Flush-grade piezometer completed with steel cover and locking cap. |
| | 30 | 7S | 1.5 | 12-21-50 (71) | Chalk - Olive green-grey, moist, hard, micaceous | |



REV 11/89 FORM D1586

| PROJECT NUMBER | BORING NUMBER | |
|---|---|---|
| MGM27526.SI.FK | B6MW (Monitoring Well) | SHEET 1 OF 1 |

# SOIL BORING LOG

PROJECT Dannelly ANG LOCATION Background

ELEVATION 198.4'(Gr.), 198.23'(TOC) DRILLING CONTRACTOR Kilman Bros./Stone Mt. GA

DRILLING METHOD AND EQUIPMENT 3¼" ID HSA, CME 75

WATER LEVELS START 2-27-91 (1005) FINISH 2-27-91 (1040) LOGGER B. Carlisle

| DEPTH BELOW SURFACE (FT) | SAMPLE INTERVAL | SAMPLE NUMBER AND TYPE | SAMPLE RECOVERY (FT) | STANDARD PENETRATION TEST RESULTS 6"-6"-6" (N) | SOIL DESCRIPTION: SOIL NAME, USCS GROUP SYMBOL, COLOR, MOISTURE CONTENT, RELATIVE DENSITY OR CONSISTENCY, SOIL STRUCTURE, MINERALOGY | COMMENTS: DEPTH OF CASING, DRILLING RATE, DRILLING FLUID LOSS, TESTS AND INSTRUMENTATION |
|---|---|---|---|---|---|---|
| | | | | | | Boring B6MW is nested with B5PS, therefore soil was analyzed only in B5PS. |
| 5 | 5 | 1S | 1.5 | 5-6-8 (14) | Silty Clay (CL-ML)-Brown-tan w/dark organic silt, moist, stiff | |
| 10 | 10 | 2S | 1.5 | 3-4-5 (9) | Fat Clay with Sand (CH)- Mottled orange-brown to tan, moist, stiff, slightly chalky | |
| 15 | 15 | 3S | 1.5 | 7-8-12 (20) | Silty Clay (CL-ML)-Brown w/lt. grey chalky laminae, moist v. stiff | |
| 20 | 20 | 4S | 1.5 | 13-33-50/5 (83) | Chalk - Greenish-grey, moist, hard, silty, micaceous | Boring terminated @ 1040 hrs. |
| | | | | | Boring terminated @ 20' bgs Installed 10' of 2" pvc screen and 10' of 2" pvc casing. Added 12.5' graded sandpack, 2' bentonite seal, and grouted annulus to surface (0'-5.5'). Flush-grade monitoring well completed with steel cover, locking cap, and brass ID plate. | |



REV 11/89 FORM D1586

CH2M HILL

| PROJECT NUMBER | BORING NUMBER | | |
|---|---|---|---|
| MGM27526.SI.FK | P1BS | SHEET 1 | OF 1 |

# SOIL BORING LOG

PROJECT Dannelly ANG LOCATION POL (Site 1)

ELEVATION 202.6' (Gr.) DRILLING CONTRACTOR Kilman Bros./Stone Mt. GA

DRILLING METHOD AND EQUIPMENT HSA, 3¼" ID, CME 75

WATER LEVELS START 3-5-91 ~~(0800 hrs)~~ FINISH 3-5-91 ~~(0855 hrs)~~ LOGGER B. Carlisle

| DEPTH BELOW SURFACE (FT) | SAMPLE INTERVAL | SAMPLE NUMBER AND TYPE | SAMPLE RECOVERY (FT) | STANDARD PENETRATION TEST RESULTS 6"-6"-6" (N) | SOIL DESCRIPTION: SOIL NAME, USCS GROUP SYMBOL, COLOR, MOISTURE CONTENT, RELATIVE DENSITY OR CONSISTENCY, SOIL STRUCTURE, MINERALOGY | COMMENTS: DEPTH OF CASING, DRILLING RATE, DRILLING FLUID LOSS, TESTS AND INSTRUMENTATION |
|---|---|---|---|---|---|---|
| | | 1S | -- | Not Sampled | Not Sampled-Limestone backfill | HNU headspace @ borehole = 120ppm |
| 2 | | 2S | 0.9 | 6-6-8 (14) | Silty Clay (CL-ML)-Mottled lt. grey-tan, moist, stiff, micaceous, slightly chalky | Chem. Analysis (2S) |
| 4 | | 3S | 1.2 | 5-6-9 (15) | Silty Clay (CL-ML)-Similar to 2S | Borehole headspace w/HNU = 10-15ppm |
| 6 | | 4S | 1.5 | 7-10-15 (25) | Silty Clay (CL-ML)-Similar to 2S except very stiff, less than 5% calcareous gravel, clay is ferruginous | |
| 8 | | 5S | 1.5 | 9-15-12 (27) | Silty Clay (CL-ML)-Tan with light grey, moist, v. stiff, silty | Chem. Analysis (5S) TPH & BTEX Dup taken |
| 10 | | 6S | 1.5 | 7-12-15 (27) | Silty Clay (CL-ML)-Similar to 5S | |
| 12 | | 7S | 1.5 | 16-16-22 (38) | Silty Clay (CL-ML)-Similar to 5S Lower 0.5' is Chalk-Greenish-grey-olive, moist, hard, silty | Chem. Analysis (7S) |
| 14 | | | | | Boring terminated @ 14' bgs- Annulus grouted to surface | |

Soil HNU Headspace (ppm)

3S = 220ppm
4S = 130ppm
6S = 1ppm
7S = 5ppm



REV 11/89 FORM D1586

CH2M HILL

| PROJECT NUMBER | BORING NUMBER | |
|---|---|---|
| MGM27526.SI.FK | P2BS | SHEET 1 OF 1 |

# SOIL BORING LOG

PROJECT Dannelly ANG LOCATION POL (Site 1)

ELEVATION 201.8' (Gr.) DRILLING CONTRACTOR Kilman Bros./Stone Mt. GA

DRILLING METHOD AND EQUIPMENT HSA, 3¼" ID, CME 75

WATER LEVELS START 2-28-91 (1140) FINISH 2-28-91 (1230) LOGGER B. Carlisle

| DEPTH BELOW SURFACE (FT) | SAMPLE INTERVAL | SAMPLE NUMBER AND TYPE | SAMPLE RECOVERY (FT) | STANDARD PENETRATION TEST RESULTS 6"-6"-6" (N) | SOIL DESCRIPTION: SOIL NAME, USCS GROUP SYMBOL, COLOR, MOISTURE CONTENT, RELATIVE DENSITY OR CONSISTENCY, SOIL STRUCTURE, MINERALOGY | COMMENTS: DEPTH OF CASING, DRILLING RATE, DRILLING FLUID LOSS, TESTS AND INSTRUMENTATION |
|---|---|---|---|---|---|---|
| | | | | Not Sampled | Not Sampled - Limestone backfill | |
| 2 | | 1S | -- | | | |
| | | 2S | 1.2 | 5-7-8 (15) | Silty Clay (ML-CL) - Mottled tan to greenish-grey, moist, stiff | Chem. Analysis (2S) |
| 4 | | 3S | 1.5 | 4-3-4 (7) | Silty Clay (ML-CL) - Similar to 2S except firm | |
| 6 | | 4S | 1.5 | 14-14-14 (28) | Silty Clay (ML-CL) - Mottled tan-lt. grey, moist, v. stiff | |
| 8 | | 5S | 1.5 | 8-14-14 (28) | Silty Clay (ML-CL) - Similar to 4S | Chem. Analysis (5S) |
| 10 | | 6S | 1.5 | 4-4-9 (13) | Silty Clay (ML-CL) - Similar to 4S except stiff | |
| 12 | | 7S | 1.5 | 9-12-16 (38) | Silty Clay (ML-CL) - Similar to 4S except hard, lower 0.5' is Chalk - greenish-grey, moist | Chem. Analysis (7S) |
| 14 | | | | | Boring terminated at 14 ft. bgs-annulus grouted to surface | |

Soil HNU Headspace (ppm)

2S = 250
3S = 160
4S = 140
6S = 10



REV 11/89 FORM D1586

CH2M HILL

| PROJECT NUMBER | BORING NUMBER | |
|---|---|---|
| MGM27526.SI.FK | P3BS | SHEET 1 OF 1 |

# SOIL BORING LOG

PROJECT Dannelly ANG LOCATION POL (Site 1)

ELEVATION 201.2' (Gr.) DRILLING CONTRACTOR Kilman Bros./Stone Mt. GA

DRILLING METHOD AND EQUIPMENT HSA, 3¼" ID CME 75

WATER LEVELS START 2-28-91 (1450) FINISH 2-28-91 (1545) LOGGER B. Carlisle

| DEPTH BELOW SURFACE (FT) | SAMPLE INTERVAL | SAMPLE NUMBER AND TYPE | SAMPLE RECOVERY (FT) | STANDARD PENETRATION TEST RESULTS 6"-6"-6" (N) | SOIL DESCRIPTION: SOIL NAME, USCS GROUP SYMBOL, COLOR, MOISTURE CONTENT, RELATIVE DENSITY OR CONSISTENCY, SOIL STRUCTURE, MINERALOGY | COMMENTS: DEPTH OF CASING, DRILLING RATE, DRILLING FLUID LOSS, TESTS AND INSTRUMENTATION |
|---|---|---|---|---|---|---|
| 2 | | 1S | -- | Not Sampled | Not sampled-Limestone backfill | |
| 4 | | 2S | 1.2 | 4-5-6 (11) | Silty Clay (ML-CL)-Mottled greenish-brown to lt. grey, moist, stiff, contains white chalky silt | Chem. Analysis (2S) |
| 6 | | 3S | -- | -- | Silty Clay (ML-CL) - Similar to 2S | 3S sampled with hand auger to check for utility obstruction |
| 8 | | 4S | 1.5 | 14-13-17 (30) | Silty Clay (ML-CL)-Similar to 2S except hard | Chem. Analysis (4S) |
| 10 | | 5S | 1.5 | 5-6-8 (14) | Silty Clay (ML-CL)- Greenish-brown to tan, moist, stiff | |
| 12 | | 6S | 1.5 | 4-5-8 (13) | Silty Clay (ML-CL)- Greenish brown-tan with lt. grey, moist, stiff | |
| 14 | | 7S | 1.0 | 21-40-50/2 (90) | Chalk - Greenish grey-olive, moist hard, silty | Chem. Analysis (7S) |
| | | | | | Boring terminated @ 14' bgs-Annulus grouted to surface | |

Soil HNU Headspace (ppm)

4S = 9
5S = 3
6S = 30
7S = 11



REV 11/89 FORM D1586

CH2M HILL

| PROJECT NUMBER | BORING NUMBER | SHEET 1 OF 1 |
|---|---|---|
| MGM27526.SI.FK. | P4BS | |

# SOIL BORING LOG

PROJECT Dannelly ANG LOCATION POL (Site 1)

ELEVATION 202.2' (Gr.) DRILLING CONTRACTOR Kilman Bros./Stone Mt. GA

DRILLING METHOD AND EQUIPMENT HSA, 3¼" ID, CME 75

WATER LEVELS START 3-5-91 (1225 hrs) FINISH 3-5-91 ~~(1300 hrs)~~ LOGGER B. Carlisle

| DEPTH BELOW SURFACE (FT) | SAMPLE INTERVAL | SAMPLE NUMBER AND TYPE | SAMPLE RECOVERY (FT) | STANDARD PENETRATION TEST RESULTS 6"-6"-6" (N) | SOIL DESCRIPTION: SOIL NAME, USCS GROUP SYMBOL, COLOR, MOISTURE CONTENT, RELATIVE DENSITY OR CONSISTENCY, SOIL STRUCTURE, MINERALOGY | COMMENTS: DEPTH OF CASING, DRILLING RATE, DRILLING FLUID LOSS, TESTS AND INSTRUMENTATION |
|---|---|---|---|---|---|---|
| | | 1S | -- | Not Sampled | Not Sampled-Limestone backfill | |
| 2 | | | | | | |
| | | 2S | 1.0 | 4-10-12 (22) | Silty Clay (CL-ML)-Mottled tan-lt. grey, moist, v. stiff, chalky | Cham. Analysis (2S) |
| 4 | | | | | | |
| | | 3S | 1.5 | 3-3-3 (6) | Silty Clay (CL-ML)-Tan to brown w/lt. grey calcareous silt, moist, firm | |
| 6 | | | | | | |
| | | 4S | 1.2 | 6-8-12 (20) | Silty Clay (CL-ML)-Similar to 3S except v. stiff | Chem. Analysis (4S) |
| 8 | | | | | | |
| | | 5S | 1.5 | 4-4-6 (10) | Silty Clay (CL-ML)-Similar to 3S except stiff | |
| 10 | | | | | | |
| | | 6S | 1.5 | 5-5-8 (13) | Silty Clay (CL-ML)-Similar to 3S except stiff, contain slight amount roots | |
| 12 | | | | | | |
| | | 7S | 1.5 | 8-15-37 (52) | Silty Clay (CL-ML)-Similar to 3S-Lower 1.0' is Chalk-Greenish-grey to olive, moist, hard, silty | Chem. Analysis (7S) |
| 14 | | | | | | |
| | | | | | Boring terminated @ 14' bgs-Annulus grouted to surface | |
| | | | | | | Soil HNU Headspace (ppm)<br>3S = 130<br>5S = 55<br>6S = 60 |



REV 11/89 FORM D1586

| PROJECT NUMBER | BORING NUMBER | |
|---|---|---|
| MGM27526.SI.FK | P5BS | SHEET 1 OF1 |

# SOIL BORING LOG

PROJECT Dannelly ANG LOCATION POL (Site 1)

ELEVATION 201.6' (Gr.) DRILLING CONTRACTOR Kilman Bros./Stone Mt. GA

DRILLING METHOD AND EQUIPMENT HSA, 3¼" ID, CME 75

WATER LEVELS START 2-28-91 (1645) FINISH 2-28-91 (1740 hrs) LOGGER B. Carlisle

| DEPTH BELOW SURFACE (FT) | SAMPLE INTERVAL | SAMPLE NUMBER AND TYPE | SAMPLE RECOVERY (FT) | STANDARD PENETRATION TEST RESULTS 6"-6"-6" (N) | SOIL DESCRIPTION: SOIL NAME, USCS GROUP SYMBOL, COLOR, MOISTURE CONTENT, RELATIVE DENSITY OR CONSISTENCY, SOIL STRUCTURE, MINERALOGY | COMMENTS: DEPTH OF CASING, DRILLING RATE, DRILLING FLUID LOSS, TESTS AND INSTRUMENTATION |
|---|---|---|---|---|---|---|
| 2 | | 1S | -- | Not Sampled | Not sampled-Limestone backfill | Soil descriptions above the Chalk (7S) are of POL backfill material |
| 4 | | 2S | NR | -- | No recovery | |
| 6 | | 3S | 0.9 | 1-1-2 (3) | Well Graded Sand with Gravel (SW) (Backfill material) tan-brown, wet, very loose | Chem. Analysis (3S) |
| 8 | | 4S | 1.2 | 2-1-1 (2) | Well Graded Sand with Gravel and Clay (SW-SC) - Similar to 3S escept less than 15% Clay | Backfill grain size analysis |
| 10 | | 5S | 1.2 | 2-2-2 (4) | Well Graded Sand wih Gravel and Clay (SW-SC) - Similar to 4S | Chem. Analysis (5S) |
| 12 | | 6S | 1.5 | 2-2-8 (10) | Well Graded Sand with Gravel and Clay (SW-SC) - Similar to 4S except lower 0.2' is greenish-grey Chalk | |
| 14 | | 7S | 1.5 | 8-25-30 (55) | Chalk - olive-green to lt. grey, moist hard, silty | Chem. Analysis (7S) |
| | | | | | Boring terminated @ 14' bgs- Installed 10' of 2" pvc screen to temporarily keep the annulus open. After obtaining a water sample the screen was pulled and the remaining annulus was grouted to surface. | Could not collect Shelby tube at 7S due to refusal (hardness)<br><br>*Soil HNU Hadspace (ppm)<br><br>6S = 60<br><br>Split spoon would not retain enough sample to perform headspace analysis in the saturated backfill. |

CH2M HILL

| PROJECT NUMBER | BORING NUMBER | | |
|---|---|---|---|
| MGM27526.SI.FK | P6BS | SHEET 1 | OF 1 |

# SOIL BORING LOG

PROJECT Dannelly ANG LOCATION POL (Site 1)

ELEVATION 202.1' (Gr.) DRILLING CONTRACTOR Kilman Bros./Stone Mt. GA

DRILLING METHOD AND EQUIPMENT HSA, 3¼" ID, CME 75

WATER LEVELS START 3-5-91 ~~(1005 hrs)~~ FINISH 3-5-91 ~~(1115 hrs)~~ LOGGER B. Carlisle

| DEPTH BELOW SURFACE (FT) | SAMPLE INTERVAL | SAMPLE NUMBER AND TYPE | SAMPLE RECOVERY (FT) | STANDARD PENETRATION TEST RESULTS 6"-6"-6" (N) | SOIL DESCRIPTION: SOIL NAME, USCS GROUP SYMBOL, COLOR, MOISTURE CONTENT, RELATIVE DENSITY OR CONSISTENCY, SOIL STRUCTURE, MINERALOGY | COMMENTS: DEPTH OF CASING, DRILLING RATE, DRILLING FLUID LOSS, TESTS AND INSTRUMENTATION |
|---|---|---|---|---|---|---|
| | | 1S | -- | Not Sampled | Asphalt Pavement and backfill | |
| 2 | | 2S | 1.5 | 5-5-8 (13) | Silty Clay (CL-ML)-Mottled lt. grey-tan, moist, stiff, silty | |
| 4 | | 3S | 0.8 | 5-7-9 (16) | Silty Clay (CL-ML)-Similar to above except v. stiff, sample contained asphalt cavings from road | Intended to collect sample (3S) for analysis but the tubes contained asphalt which was carry-down from the road above. |
| 6 | | 4S | 1.0 | 6-8-10 (18) | Silty Clay (CL-ML)-Similar to 2S except v. stiff | Sample Analysis (4S) TPH sample may contain asphalt. |
| 8 | | 5S | 1.2 | 11-14-13 (27) | Silty Clay (CL-ML)-Similar to 2S except v. stiff | Sample Analysis (5S) |
| 10 | | 6S | 1.5 | 12-10-15 (25) | Silty Clay (CL-ML)-Similar to 2S except v. stiff | |
| 12 | | 7S | 1.2 | 7-11-14 (25) | Silty Clay (CL-ML)-Similar to 2S except v. stiff-Lower 0.3' is Chalk-Greenish-grey-olive, silty | Sample Analysis (7S) |
| 14 | | | | | Boring terminated @ 14 ft. bgs-Annulus grouted to surface | |

Soil HNU Headspace (ppm)

1S = 5
2S = 3
5S = 3
6S = 1



REV 11/89 FORM D1586

| PROJECT NUMBER | BORING NUMBER | |
|---|---|---|
| MGM27526.SI.FK | P7BS | SHEET 1 OF 1 |

# SOIL BORING LOG

PROJECT Dannelly ANG LOCATION POL (Site 1)

ELEVATION 202.4' (Gr.) DRILLING CONTRACTOR Kilman Bros./Stone Mt. GA

DRILLING METHOD AND EQUIPMENT HSA, 3¼" ID, CME 75

WATER LEVELS START 3-5-91 (1405 hrs) FINISH 3-5-91 (1445 hrs) LOGGER B. Carlisle

| DEPTH BELOW SURFACE (FT) | SAMPLE INTERVAL | SAMPLE NUMBER AND TYPE | SAMPLE RECOVERY (FT) | STANDARD PENETRATION TEST RESULTS 6"-6"-6" (N) | SOIL DESCRIPTION: SOIL NAME, USCS GROUP SYMBOL, COLOR, MOISTURE CONTENT, RELATIVE DENSITY OR CONSISTENCY, SOIL STRUCTURE, MINERALOGY | COMMENTS: DEPTH OF CASING, DRILLING RATE, DRILLING FLUID LOSS, TESTS AND INSTRUMENTATION |
|---|---|---|---|---|---|---|
| 2 | | 1S | -- | Not Sampled | Not Sampled-Limestone | Soil descriptions above Sample 6S are of the POL backfill material |
| 4 | | 2S | 0.2 | 1-1-0 (1) | Well Graded Sand with Gravel (SW) (Backfill)-wet, loose | Could not perform sample analysis due to low recovery |
| 6 | | 3S | 0.2 | 1-1-1 (2) | Well Graded Sand with Gravel (SW) (Backfill)-wet, loose | Could not perform sample analysis due to low recovery |
| 8 | | 4S | 0.7 | 2-1-1 (2) | Well Graded Sand with Gravel and Clay (SW-SC)-(Backfill)-wet, loose | Sample Analysis (4S) |
| 10 | | 5S | 0.8 | 2-1-1 (2) | Well Graded Sand with Gravel and Clay (SW-SC)-(Backfill)-wet, loose | Sample Analysis (5S) |
| 12 | | 6S | 0.8 | 6-12-50/4 (72) | Well Graded Sand with Gravel and Clay (SW-SC)-(Backfill)-wet, loose | Sample Analysis (6S) |
| | | | | | Boring terminated @ 12' bgs- Hit refusal-Driller believes the auger has encountered a concrete slab that anchors the USTs. | Could not collect Shelby Tube beneath backfill due to refusal on potential concrete slab. |
| | | | | | Boring terminated at 12 ft. bgs- Installed 10 ft. of 2" pvc screen to temporarily keep the annulus open. After obtaining a water sample the screen was pulled and the remaining annulus was grouted to surface. | Split spoon would not retain enough sample to perform HNU headspace. |

| PROJECT NUMBER | BORING NUMBER | |
|---|---|---|
| MGM27526.SI.FK | P8BS | SHEET 1 OF 1 |

# SOIL BORING LOG

PROJECT Dannelly ANG LOCATION POL (Site 1)

ELEVATION 201.0' (Gr.) DRILLING CONTRACTOR Kilman Bros./Stone Mt. GA

DRILLING METHOD AND EQUIPMENT HSA, 3¼" ID, CME 75

WATER LEVELS START 3-5-91 (1500 hrs) FINISH 3-5-91 (1635 hrs) LOGGER B. Carlisle

| DEPTH BELOW SURFACE (FT) | SAMPLE INTERVAL | SAMPLE NUMBER AND TYPE | SAMPLE RECOVERY (FT) | STANDARD PENETRATION TEST RESULTS 6"-6"-6" (N) | SOIL DESCRIPTION: SOIL NAME, USCS GROUP SYMBOL, COLOR, MOISTURE CONTENT, RELATIVE DENSITY OR CONSISTENCY, SOIL STRUCTURE, MINERALOGY | COMMENTS: DEPTH OF CASING, DRILLING RATE, DRILLING FLUID LOSS, TESTS AND INSTRUMENTATION |
|---|---|---|---|---|---|---|
| | | 1S | -- | Not Sampled | Not Sampled-Limestone backfill | |
| 2 | | 2S | 1.5 | 4-7-8 (15) | Sandy Fat Clay (CH)-Mottled brown-red, moist, stiff, lower 1.0' is Silty Clay (CL-ML)-tan-grey, moist, stiff, chalky | Sample Analysis (2S) |
| 4 | | 3S | 1.2 | 5-7-9 (16) | Silty Clay (CL-ML)-Similar to the lower 1.0' in 2S | |
| 6 | | 4S | 1.0 | 7-8-9 (17) | Silty Clay-tan, moist, very stiff, silty | Sample Analysis (4S) |
| 8 | | 5S | 1.5 | 4-7-8 (15) | Silty Clay-tan -lt. grey, moist, stiff, silty, micaceous | |
| 10 | | 6S | 2.0 | Shelby Tube | Silty Clay (CL-ML)-Similar to 5S as noted from open ends of Shelby Tube | SHELBY TUBE SAMPLE (6S) |
| 12 | | 7S | 1.0 | 12-22-34 (56) | Silty (CL-ML)-Similar to 5S- Lower 0.3' is Chalk Greenish-grey-olive, moist, hard, silty | Sample Analysis (7S) |
| 14 | | | | | Boring terminated @ 14' bgs- Annulus grouted to surface | Soil HNU Headspace (ppm)<br>3S = 1 ppm<br>4S = 1 ppm<br>5S = 0 ppm |



REV 11/89 FORM D1586

| PROJECT NUMBER | BORING NUMBER | |
|---|---|---|
| MGM27526.SI.FK | 01BS | SHEET 1 OF 1 |

# SOIL BORING LOG

PROJECT Dannelly ANG LOCATION OWS (Site 2)

ELEVATION 198.9' (Gr.) DRILLING CONTRACTOR Kilman Bros./Stone Mt. GA

DRILLING METHOD AND EQUIPMENT HSA, 3¼" ID, CME 75

WATER LEVELS START 3-6-91 (1000 hrs) FINISH 3-6-91 (1045 hrs) LOGGER B. Carlisle

| DEPTH BELOW SURFACE (FT) | SAMPLE INTERVAL | SAMPLE NUMBER AND TYPE | SAMPLE RECOVERY (FT) | STANDARD PENETRATION TEST RESULTS 6"-6"-6" (N) | SOIL DESCRIPTION: SOIL NAME, USCS GROUP SYMBOL, COLOR, MOISTURE CONTENT, RELATIVE DENSITY OR CONSISTENCY, SOIL STRUCTURE, MINERALOGY | COMMENTS: DEPTH OF CASING, DRILLING RATE, DRILLING FLUID LOSS, TESTS AND INSTRUMENTATION |
|---|---|---|---|---|---|---|
| 2 | | 1S | 0.8 | 3-3-3 (6) | Sandy Silty Clay (CL-ML)-Brown, moist loose, topsoil composition, organic, material with roots | Chem. Analysis (1S) |
| 4 | | 2S | 1.5 | 2-2-2 (4) | Silty Clay with Sand (CL-ML)-Brown-tan with lt. grey silt, moist, soft | |
| 6 | | 3S | 1.2 | 2-6-8 (14) | Silty Clay (CL-ML)-Mottled tan-lt. grey, moist, stiff, contains less than 5% calcareous sand | |
| 8 | | 4S | 1.5 | 2-4-5 (9) | Silty Clay (CL-ML)-Similar to 3S except mottled brown to red with lt. grey silt | |
| 10 | | 5S | 1.5 | 4-5-7 (12) | Silty Clay (CL-ML)-Similar to 3S except contains roots, clay becomes chalky | |
| 12 | | 6S | 1.2 | 5-5-5 (10) | Silty Clay (CL-ML)-Similar to 3S except slightly sandy (less than 10%) | Chem. Analysis (6S) |
| 14 | | 7S | 1.5 | 8-11-10 (21) | Silty Clay with Sand (CL-ML)-Greenish-grey to brown, moist, glauconitic, sand less than 10% | Solvent odor noted in sample |
| 16 | | 8S | 1.5 | 6-11-27 (38) | Silty Clay (CL-ML)-Similar to 7S except hard - Lower 0.5' is Chalk-Greenish-grey to olive, moist, hard, silty | Chem. Analysis (8S) |
| | | | | | Boring terminated @ 16' bgs-Annulus grouted to surface | |
| | | | | | | Soil HNU Headspace (ppm)<br>2S = 1 ppm<br>5S = 40 ppm<br>7S = 40 ppm |

| PROJECT NUMBER | BORING NUMBER | |
|---|---|---|
| MGM27526.SI | 02BS | SHEET 1 OF 1 |

# SOIL BORING LOG

PROJECT Dannelly ANG LOCATION OWS (Site 2)

ELEVATION 198.7' (Gr.) DRILLING CONTRACTOR Kilman Bros./Stone Mt. GA

DRILLING METHOD AND EQUIPMENT HSA, 3¼" ID

WATER LEVELS START 2-28-91 (0820 hrs) FINISH 2-28-91 (0930 hrs) LOGGER B. Carlisle

| DEPTH BELOW SURFACE (FT) | SAMPLE INTERVAL | SAMPLE NUMBER AND TYPE | SAMPLE RECOVERY (FT) | STANDARD PENETRATION TEST RESULTS 6"-6"-6" (N) | SOIL DESCRIPTION: SOIL NAME, USCS GROUP SYMBOL, COLOR, MOISTURE CONTENT, RELATIVE DENSITY OR CONSISTENCY, SOIL STRUCTURE, MINERALOGY | COMMENTS: DEPTH OF CASING, DRILLING RATE, DRILLING FLUID LOSS, TESTS AND INSTRUMENTATION |
|---|---|---|---|---|---|---|
| | | 1S | 0.8' | 4-5-4 (9) | Silty Clay with Sand (CL-ML) - Tan-lt. grey, moist, stiff, contain slight organic material with roots | Chem. Analysis (1S) |
| 2 | | 2S | 1.5' | 4-4-5 (9) | Silty Clay (CL-ML) - Tan-lt. grey, moist, stiff | |
| 4 | | 3S | 1.5' | 5-5-5 (10) | Silty Clay (CL-ML) - Greenish grey-tan, moist, stiff, slightly organic | |
| 6 | | 4S | 1.5' | 2-4-8 (12) | Silty Clay (CL-ML) - Mottled brown-tan-grey, moist, stiff, ferruginous, slightly calcareous (sand) | |
| 8 | | 5S | 0.8' | 2-5-6 (11) | Silty Clay (CL-ML) - Similar to 4S | |
| 10 | | 6S | 1.5' | 5-4-7 (11) | Silty Clay (CL-ML) - Similar to 4S | HNV scan over split spoon sample shows 5-10 ppm |
| 12 | | 7S | 1.2' | 8-11-14 (25) | Silty Clay (CL-ML) - Similar to 4S | Chem. Analysis (7S) HNV scan 0-2 ppm |
| 14 | | 8S | 1.5' | 12-16-32 (48) | Silty Clay (CL-ML) - Similar to 4S - lower 0.5' is Chalk-lt.-med. grey, moist, hard, silty | |
| 16 | | 9S | 1.5' | 16-30-50/4 (80) | Chalk - Slightly weathered tan-grey in upper 0.5' - lower 1.0' is greenish grey, moist, hard | Chem. Analysis (9S) |
| 18 | | | | | Boring terminated @ 18ft bgs--annulus grouted to surface | Soil HNV Headspace (ppm)<br>2S = 0.4<br>3S = 0.8<br>5S = 0.5<br>6S = 20<br>8S = 22<br>9S = 38 |

CH2M HILL

| PROJECT NUMBER | BORING NUMBER | |
|---|---|---|
| MGM27526.SI.FK | 03BS | SHEET 1 OF 1 |

# SOIL BORING LOG

PROJECT Dannelly ANG LOCATION OWS(Site 2)

ELEVATION 199.3' (Gr.) DRILLING CONTRACTOR Kilman Bros./Stone Mt. GA

DRILLING METHOD AND EQUIPMENT HSA, 3½" ID, CME 75

WATER LEVELS START 3-6-91 (1505 hrs) FINISH 3-6-91 LOGGER B. Carlisle

| DEPTH BELOW SURFACE (FT) | SAMPLE INTERVAL | SAMPLE NUMBER AND TYPE | SAMPLE RECOVERY (FT) | STANDARD PENETRATION TEST RESULTS 6"-6"-6" (N) | SOIL DESCRIPTION: SOIL NAME, USCS GROUP SYMBOL, COLOR, MOISTURE CONTENT, RELATIVE DENSITY OR CONSISTENCY, SOIL STRUCTURE, MINERALOGY | COMMENTS: DEPTH OF CASING, DRILLING RATE, DRILLING FLUID LOSS, TESTS AND INSTRUMENTATION |
|---|---|---|---|---|---|---|
| | | 1S | 1.0 | 2-4-6 (10) | Sandy, Silty Clay (CL-ML)-Mottled brown-red, moist, stiff, organic material and roots present | Chem. Analysis (1S) |
| 2 | | 2S | 1.5 | 2-2-2 (4) | Silty Clay (CL-ML)-Mottled brown-red, moist, soft | |
| 4 | | 3S | 1.5 | 3-6-8 (14) | Silty Clay (CL-ML)-Mottled brown-tan w/ lt. grey silt (calcareous), moist, stiff | |
| 6 | | 4S | 1.2 | 7-9-12 (21) | Silty Clay (CL-ML)-Similar to 3S except v. stiff | Chem. Analysis (4S) |
| 8 | | 5S | 2.0 | --- | Silty Clay (CL-ML)-Similar to 4S as noted from open ends of Shelby Tube | Shelby Tube (5S) |
| 10 | | 6S | 1.5 | 8-12-23 (35) | Silty Clay (CL-ML)-Similar to 3S except hard, lower 0.2' is chalky, lt. grey to brownish-green (weathered) | |
| 12 | | 7S | 1.5 | 22-35-50/5 (85) | Silty Clay (CL-ML)-Similar to lower 0.2' in 6S. Lower 1.0' is Chalk-Greenish grey to olive, moist, hard, silty | Chem. Analysis (7S) |
| 14 | | 8S | 3.0 | CORE | Chalk-Similar to lower 1.0' in 7S | 3' Core of Mooreville Chalk |
| 17 | | | | | Boring terminated @ 17ft. bgs-Annulus grouted to surface | |

Soil HNU Headspace (ppm)

2S = 5ppm
3S = 10ppm
6S = 60ppm



REV 11/89 FORM D1586

CH2M HILL

| PROJECT NUMBER | BORING NUMBER | SHEET | OF |
|---|---|---|---|
| MGM27526.SI | 04BS | 1 | 1 |

# SOIL BORING LOG

PROJECT Dannelly ANG LOCATION OWS (Site 2)

ELEVATION 199.2' (Gr.) DRILLING CONTRACTOR Kilman Bros./Stone Mt. GA

DRILLING METHOD AND EQUIPMENT HSA, 3¼" ID, CME 75

WATER LEVELS START 3-1-91 ~~(1030 hrs)~~ FINISH 3-1-91 ~~(1150)~~ LOGGER B. Carlisle

| DEPTH BELOW SURFACE (FT) | SAMPLE INTERVAL | SAMPLE NUMBER AND TYPE | SAMPLE RECOVERY (FT) | STANDARD PENETRATION TEST RESULTS 6"-6"-6" (N) | SOIL DESCRIPTION: SOIL NAME, USCS GROUP SYMBOL, COLOR, MOISTURE CONTENT, RELATIVE DENSITY OR CONSISTENCY, SOIL STRUCTURE, MINERALOGY | COMMENTS: DEPTH OF CASING, DRILLING RATE, DRILLING FLUID LOSS, TESTS AND INSTRUMENTATION |
|---|---|---|---|---|---|---|
| | | 1S | 1.2 | 3-5-6 (11) | Sandy Organic Topsoil Upper 0.4'- Silty Clay (ML-CL) - Lower 0.8'- mottled tan-lt grey, moist, stiff | Chem. Analysis (1S) |
| 2 | | 2S | 1.5 | 5-4-5 (9) | Silty Clay (ML-CL) - Similar to lower 0.8' of 1S | |
| 4 | | 3S | 1.5 | 4-4-7 (11) | Silty Clay (ML-CL) - Similar to lower 0.8' of 1S except slight calcareous sand content | |
| 6 | | 4S | 1.0 | 4-8-11 (19) | Silty Clay (ML-CL) - Similar to lower 0.8' of 1S except v. stiff, chalky | Chem. Analysis (4S) |
| 8 | | 5S | 2.0 | Shelby Tube | Silty Clay (ML-CL) - Similar to lower 0.8' of 1S as noted from open ends of Shelby Tube | Shelby Tube (5S) |
| 10 | | 6S | 1.5 | 8-10-16 (26) | Silty Clay (ML-CL) - Tan-lt. grey, moist, v. stiff, chalky (weathered) slight organic material noted (roots) | |
| 12 | | 7S | 1.5 | 4-8-24 (32) | Silty Clay (ML-CL) - Similar to 6S except hard - No organics noted lower 0.2' is Chalk, greenish grey, silty, hard | |
| 14 | | 8S | 1.5 | 28-35-38 (73) | Chalk w/interlayered silty clay. Chalk is olive green to grey, moist, hard | Chem. Analysis (8S) |
| 16 | | | | | Boring terminated @ 16' bgs- Annulus grouted to surface | |

Soil HNU Headspace (ppm)

2S = 230
3S = 20
6S = 300
7S = 150

*Note-Boring redrilled and sampled 3/6/91 due to sample shipping problems



REV 11/89 FORM D1586

CH2M HILL

| PROJECT NUMBER | BORING NUMBER | |
|---|---|---|
| MGM27526.SI.FK | 05BS | SHEET 1 OF 1 |

# SOIL BORING LOG

PROJECT Dannelly ANG LOCATION OWS (Site 2)

ELEVATION 199.1' (Gr.) DRILLING CONTRACTOR Kilman Bros./Stone Mt. GA

DRILLING METHOD AND EQUIPMENT HSA, 3¼" ID, CME 75

WATER LEVELS START 3-6-91 (1310 hrs) FINISH 3-6-91 (1350 hrs) LOGGER B. Carlisle

| DEPTH BELOW SURFACE (FT) | SAMPLE INTERVAL | SAMPLE NUMBER AND TYPE | SAMPLE RECOVERY (FT) | STANDARD PENETRATION TEST RESULTS 6"-6"-6" (N) | SOIL DESCRIPTION: SOIL NAME, USCS GROUP SYMBOL, COLOR, MOISTURE CONTENT, RELATIVE DENSITY OR CONSISTENCY, SOIL STRUCTURE, MINERALOGY | COMMENTS: DEPTH OF CASING, DRILLING RATE, DRILLING FLUID LOSS, TESTS AND INSTRUMENTATION |
|---|---|---|---|---|---|---|
| 2 | | 1S | 0.9 | 3-4-4 (8) | Sandy Silty Clay (CL-ML)-Brown-tan w/ lt. grey silt, moist, firm, organic w/ roots | Chem. Analysis (1S) |
| 4 | | 2S | 1.5 | 2-2-2 (4) | Silty Clay with Sand (CL-ML)-Brown-tan, wet, soft, organic material and roots present | |
| 6 | | 3S | 1.5 | 2-5-4 (9) | Silty Clay (CL-ML)-Mottled tan-lt. grey, moist, stiff, clacareous silt/sand present | |
| 8 | | 4S | 1.5 | 2-3-2 (5) | Silty Clay (CL-ML)-Similar to 3S except firm | |
| 10 | | 5S | 1.0 | 4-4-8 (12) | Silty Clay (CL-ML)-Similar to 3S | Chem. Analysis (5S) |
| 12 | | 6S | 1.5 | 5-6-10 (16) | Silty Clay (CL-ML)-Tan-lt. grey, moist, v. stiff, thin chalky laminae present | |
| 14 | | 7S | 1.2 | 11-12-15 (27) | Silty Clay (CL-ML)-Mottled tan-brown w/ lt. grey silty laminae, moist, v. stiff, lower 0.2' is Chalk-Brown-greenish grey, slightly sandy-silty | Chem. Analysis (7S) |
| | | | | | Boring terminated @ 14' bgs- Annulus grouted to surface | |
| | | | | | | Soil HNU Headspace (ppm)<br>3S = 5<br>4S = 11<br>6S = 110 |

Appendix E

# COMPUTATION OF VERTICAL HYDRAULIC GRADIENT AND SEEPAGE VELOCITY

SUBJECT SI - Dannelly Air National Guard BY B. Carlisle DATE 6/24/91

CH2M HILL SHEET NO. 1 OF 2

PROJECT NO. MGM27526.SI.RP

## I Computation of Verticle Hydraulic Gradient

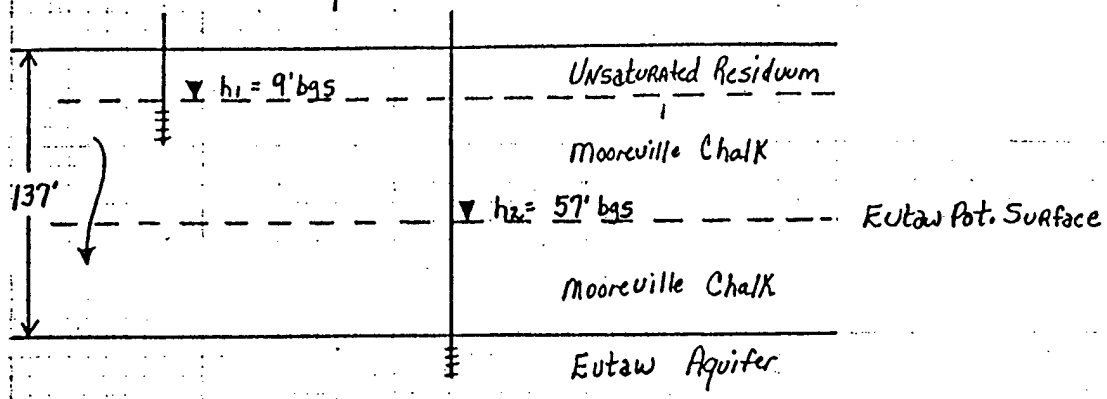


$i_v = \frac{\Delta h_v}{\Delta h}$

$i$ = vert. hyd. gradient

$\Delta h$ = change in head

$L$ = Saturated Chalk thickness

$i_v = \frac{57' - 9'}{137' - 9'}$

$i_v = \frac{48'}{128'}$

$i_v = .38$ downward through the Mooreville Chalk

## II Computation of Average Vertical Hydraulic Conductivity (K)

$\frac{\log_{10}(K_1) + \log(K_2) + \log(K_3)}{3} = \chi$

K = Conductivity values from SI

$\chi$ = log Average calculation for K

$\frac{\log_{10}(2.3 \times 10^{-6} cm/sec) + \log(1.3 \times 10^{-8} cm/sec) + \log(7.2 \times 10^{-9} cm/sec)}{3} = \chi$

$= 21.67 \div 3 = \chi = -7.22$

$10^{-7.22} = K_{av}$

$6 \times 10^{-8}$ cm/sec = $K_{av}$

## III Computation of Seepage Velocity through Residuum/Chalk

$v = \frac{Ki}{n}$

$v$ = Seepage velocity

$i$ = vert. hyd. grad. (Calc. In I)

K = Hyd. Cond. of Chalk/Residuum (Calc. in II)

n = Porosity (Av. value from John Scott, personal comm)

$v = 6 \times 10^{-8}$ cm/sec (.38)/.3

$v = 7.6 \times 10^{-8}$ cm/sec.

or

$v = 2.2 \times 10^{-4}$ Ft/day

## IV Computation of TRAVEL time through the Residuum/Chalk to the Eutaw Aquifer

$T = D/V$

T = time
D = Distance (thickness of saturated chalk at base)
V = Seepage Velocity (See III)

$T = 128' / 2.2 \times 10^{-4}$ ft/day

Time = 581,818. days or 1,594 years to reach the Eutaw Aquifer

## V Computation of Dilution Factor

$Q_m = K i A$

$Q_m$ = Rate of flow or volume per unit time in the Mooreville
K = Hydraulic Conductivity of Res./Chalk (See II)
i = Vert. gradient (See I)
A = Unit cross-sectional area

$Q_m = 6 \times 10^{-8}$ cm/sec (.38)(1 cm$^2$)

$Q_m = 6 \times 10^{-8}$ cm/sec $\left(\frac{1 \text{ inch}}{2.54 \text{ cm}}\right)\left(\frac{1 \text{ ft}}{12 \text{ inches}}\right)\left(\frac{86400 \text{ sec}}{1 \text{ day}}\right)(.38)(1 \text{ cm}^2)$

$Q_m = 6.5 \times 10^{-5}$ ft/day

$Q_m = 6.5 \times 10^{-5}$ ft/day (7.48 gal/ft$^3$)

$Q_m = 4.9 \times 10^{-4}$ gal/day/ft$^2$ $\left(\frac{43,560 \text{ ft}^2}{1 \text{ acre}}\right)$

$Q_m$ = 21 gpd/acre downward seepage from Mooreville

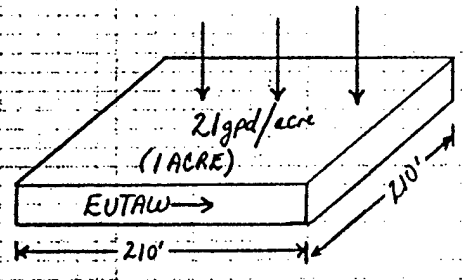


$Q = T I w$

$Q_E$ = Quantity of water moving through a known width of an aquifer (Eutaw)
T = Av. transmissivity of Eutaw from Geol. Survey Water Supply Paper 1606 by Knowles, Reade, Scott, 1963
I = Est. Eutaw Gradient from USGS Susceptibility Study, 1987
w = aquifer width

$Q_E$ = 28,000 gpd/ft (.002) (210 ft)

$Q_E$ = 11,760 gpd

Dilution factor = Q chalk / Q EUTAW

= 21 gpd ÷ 11,760 gpd

= 1 gal$_{CK}$ : 560 gal$_{EUT}$

Appendix F

# DATA REVIEW AND VALIDATION PROCEDURES

MEMORANDUM

CH2M HILL

**TO:** Margaret Corey

**FROM:** Ann Castleberry
Ann West/WDC

**DATE:** January 7, 1992

**SUBJECT:** Data Review and Validation for Dannelly ANG

**PROJECT:** MGM27526.SI.QC

# 1. INTRODUCTION

Soil and water samples were collected as part of the Dannelly Field, Alabama Air National Guard Site Investigation (SI). The purpose of this memorandum is to summarize the criteria used and the results of the review and validation process. The data results are discussed in the main body of the SI report and are not included in this memorandum. Data validation is the technical review of a data package using criteria established in the Data Quality Objectives of the Quality Assurance Project Plan.

All the samples were submitted to and analyzed by two CH2M HILL laboratories located in Montgomery, Alabama, and Redding, California.

# 2. DATA PACKAGE DELIVERABLES

When samples were submitted to the laboratory, they were assigned 8-digit unique numerical sample identifiers. The first 5 digits of the laboratory sample number identify the sample batch, and the last 3 numbers indicate each unique field sample. Attachment 1 is a summary of all the field samples submitted to the two laboratories, and the corresponding laboratory numerical sample identifier and the requested analytical parameters.

As indicated in Attachment 1, samples were submitted for either HAZWRAP Level B or C QC. For this specific project, only TPH was analyzed using Level B QC; Level C data package deliverables were provided for the other analytical methods.

Level B data package deliverables included:

- Sample results
- Method blank results
- Initial calibration data
- Continuing calibration data
- Spiked sample results

Level C data package deliverables are summarized in Table 1.

## 3. LEVEL B REVIEW CRITERIA

Level B data did not undergo a formal validation process; rather, these data were reviewed for compliance with holding time, calibration, and completeness criteria as outlined below.

### HOLDING TIME

Holding time is defined as the time, in days, from sample collection to sample analysis. The holding time for TPH analysis is 28 days.

### CALIBRATION

Initial calibration data are used to demonstrate that the analytical instrument is performing satisfactorily and is capable of producing acceptable quantitative data at the beginning of the analytical period. Continuing calibration checks document that the instrument continues to produce acceptable data.

TPH calls for an initial 3-point calibration with a zero intercept. Samples with a TPH concentration greater than the highest calibration standard were diluted and reanalyzed. Continuing calibration checks were performed after every 10th sample.

### COMPLETENESS

Completeness can have two meanings. First, it can mean that all the data package deliverables are present and reviewed. Second, completeness can be expressed as the percentage of measurements made that are judged to be valid.

## Table 1
## Level C Data Package Deliverables

### ORGANICS--GC/MS

| Form | Purpose |
|---|---|
| I | Sample results |
| II | Surrogate spike results |
| III | MS/MSD spike results |
| IV | Method blank data |
| V | GC/MS tuning data |
| VI | Initial calibration data |
| VII | Continuing calibration data |
| VIII | Internal standard area data |

### ORGANICS--GC

| | |
|---|---|
| I | Sample results |
| II | Surrogate spike results |
| III | MS/MSD spike results |
| IV | Method blank data |
| VI | Initial calibration data |
| VII | Continuing calibration data |
| ** | Second column confirmation data |

### METALS

| | |
|---|---|
| I | Sample results |
| II | Initial and continuing calibration data |
| III | Method blank results |
| IV | ICP interference check sample results |
| V | Spike recovery data |
| VI | Duplicate sample results |
| VII | Laboratory control sample results |
| VII | Standard addition results |
| X | Holding times |

# 4. LEVEL C REVIEW AND VALIDATION CRITERIA

Samples that were analyzed using CLP methods were reviewed and validated using CLP guidelines. When non-CLP methods were used, the data were reviewed and validated in the same manner using laboratory-specific acceptance criteria.

## ORGANIC ANALYSES

Organic data were generated using CLP methods and were reviewed and validated using the guidance document "Laboratory Data Validation Functional Guidelines for Evaluating Organics Analyses," 1988 revision. As mentioned above, when non-CLP methods were used, the data were reviewed and validated in the same manner using laboratory-specific acceptance criteria. This guidance document lists criteria for evaluating the data package form by form. The raw experimental data were summarized and presented in the appropriate form because no raw data were included in the data package.

Also included with the sample results are Tentatively Identified Compounds (TICs) results. When compounds not on the target compound list (TCL) are detected, the instrument searches its mass spectre database looking for the closest match. Because TICs are not included in the calibration process and are only identified by the mass spectre, they are considered to be tentatively identified. Additionally, quantitation of TICs is approximate because it is not known how efficiently the compound responds to the detector. Therefore, TICs are considered to be indicative of a class or type of compound at an approximate concentration, but calibration is necessary for greater definition.

### Form I, Data Results

This form presents the sample results and the information necessary for calculating holding times, and is also reviewed for completeness. Holding time is defined as the time, in days, from sample collection to sample extraction/analysis. It is important to note that the holding time for extraction often is different for water and soil samples for the same analytical method. Holding times are summarized in Table 2.

### Form II, Surrogate Recovery

This form summarizes the surrogate spike recovery information. Surrogate spike recoveries are used to demonstrate laboratory performance and to evaluate matrix interference. Surrogate compounds are the structural homologs of target list

**Form V, GC/MS Tuning and Mass Calibration**

This form presents the tuning and mass calibration information for each GC/MS instrument used to produce data for the sample delivery group. The CLP SOW establishes tuning and performance criteria in order to ensure mass resolution, identification, and to some degree sensitivity. These criteria are not sample specific; conformance is determined using standard materials at least once during each 12-hour analytical period. Therefore, these criteria should be met in all circumstances. Bromofluorobenzene (BFB) is used for volatile analyses, and Decafluorotriphenylphosphine (DFTPP) is used for semivolatile analyses. Gas chromatographs are calibrated and not tuned, so there is no tuning or mass calibration information for GC analyses.

**Form VI, Initial Calibration**

This form is used to report compound recoveries from the initial calibration solutions. Initial calibration data are used to demonstrate that the analytical instrument is performing satisfactorily and is capable of producing acceptable quantitative data at the beginning of the analytical period. Initial calibration is performed in accordance with the applicable analytical method. Acceptance limits are also defined by the analytical method, when recoveries do not fall within the acceptance limits, analysis of field samples is stopped, the problem identified and resolved, and the instrument recalibrated before sample analysis begins.

**Form VII, Continuing Calibration**

This form is used to report continuing calibration check sample recoveries. Continuing calibration checks document that the instrument continues to produce acceptable data. Continuing calibration check samples are analyzed at a frequency required by the analytical method, and at least immediately before and after an analytical period. Acceptance limits are also defined by the analytical method. When recoveries do not fall within the acceptance limits, analysis of field samples is stopped, the problem identified and resolved, and the instrument recalibrated before sample analysis begins.

**Form VIII, Internal Standards**

This form presents the internal standards peak area information. Internal standard compounds are used to ensure that instrument sensitivity and response are stable during each analytical sequence. Acceptance criteria are defined either in the CLP SOW or the specific analytical method.

## INORGANIC ANALYSES

All the inorganic data were generated using CLP methods and were reviewed and validated using the guidance document "Laboratory Data Validation Functional Guidelines for Evaluating Inorganic Analyses," 1988 revision. This guidance document lists criteria for evaluating the data package form by form. The raw experimental data were summarized and presented in the appropriate form since no raw data were included in the data package.

**Form I, Sample Results**

The form is similar to the organic form in that it summarizes the sample results; however, a separate form (Form X) is used to calculate sample holding time.

**Form II, Initial and Continuing Calibration Verification**

This form is similar to the organic form in that it summarizes the calibration results and is used to evaluate initial and continuing calibration. Form IIB is used to demonstrate that the laboratory was capable of analyzing below the CRDL at the time of analysis. The laboratory analyzes a standard solution that is twice the instrument detection limit (IDL) to verify the linearity of the instrument at low detection limits.

**Form III, Blanks**

This form is used to report analyte concentrations detected in the initial calibration blank (ICB), continuing calibration blanks (CCB), and the preparation blanks (PB). As mentioned in the organics section, method blanks are used to monitor the presence and magnitude of contamination introduced during the analytical process.

One method blank was analyzed for every 20 samples, or one per analytical batch, whichever was more frequent. ICBs, CCBs, and PBs were analyzed at the frequency required by the CLP SOW.

**Form IV, ICP Interference Check Sample (ICS)**

This form is used to report ICS results for each ICP instrument used. The ICS sample is a mixture of analytes that have a potential for interference and is performed to verify the laboratory's interelement and background correction factors.

**Form VA, Pre-digestion Spike Recovery**

This form is used to report results for the pre-digestion spike recovery. This spike recovery measurement is analogous to the MS/MSD in that it provides a measure of the effects of the specific sample matrix on the sample results. Additionally it provides a measure of the efficiency of the digestion process. If the pre-digestion spike recovery does not fall within the 75 to 125 percent recovery window, then a post-digestion spike is added and the sample reanalyzed.

**Form VB, Post-Digestion Spike Recovery**

This form is used to report post-digestion spike results when they are necessary. The acceptance limits for post-digestion spike recoveries are also 75 to 125 percent. If both the pre- and post-digestion spike reveries are outside these acceptance limits, then this is considered positive evidence of matrix interference and the data are flagged appropriately.

**Form VI, Duplicates**

This form is used to report duplicate laboratory results rather than field duplicate sample results. Duplicate laboratory samples differ from MS/MSD samples in that the duplicate sample is not spiked; therefore, precision must be estimated using native rather than spiked results. For this reason, laboratory duplicates were performed only on field samples and not field QC samples.

**Form VII, Laboratory Control Sample (LCS) Results**

This form is used to report the recovery results for the standard LCS. The LCS analysis is designed to monitor the efficiency of the digestion process. Analyte recoveries must fall with 90 to 110 percent; if not, the data are flagged.

**Form VIII, Standard Addition Results**

This form is used to report the results of samples analyzed using the method of standard addition and is used only for Graphite Furnace Atomic Absorption analyses. Duplicate injections and furnace post-digestion spike recoveries are used to establish the precision and accuracy of the individual analytical determinations. Samples must be analyzed using the method of standard addition if the analyte concentration is greater than five times the CRDL. The CLP SOW requires that the results agree within $\pm$ 20 percent relative standard difference or else the data is qualified.

**Form IX, ICP Serial Dilution Results**

ICP serially diluted samples are used to monitor whether significant physical or chemical interferences exist as a result of sample matrix effects. The sample is diluted and the results compared (diluted versus undiluted) for agreement for any analyte whose concentration is 50 times greater than the IDL.

**Form X, Holding Times**

This form is used to report holding times for mercury and cyanide analyses. Sample results that are not analyzed within the holding time are flagged to indicate a low bias.

## QUALIFYING FLAGS

Samples that did not meet the acceptance limit criteria were qualified with a flag, single letter abbreviations that indicate a problem with the data. Although the flags originate in the data validation section, they are included in the data summary tables (in the main body of the text) so that data will not be used indiscriminately. Flags used in this text include:

- U — Undetected. Analyte was analyzed for but not detected above the method detection limit.
- B — The analyte was detected in both the field sample and the corresponding method blank.
- J — Estimated. The analyte was present, but the reported value may not be accurate or precise.

It is important to note that the data summary form, Form I, may also have flags on them and the usage is the same as above with two major additions. For organic results, data that are above the method detection limit but below the contract required detection limit (CRDL) are flagged with a J. For inorganic results, if the analyte was detected above the instrument detection limit, but below the CRDL, then the result is flagged with a B.

## 5. RESULTS AND CONCLUSIONS

The data were reviewed and validated as indicated in the preceding sections. As each data package was reviewed, a worksheet was completed for each analysis. A blank worksheet is shown in Figure 1. These worksheets were developed to act as a checklist for the data reviewer and are included in Attachment 2 to this appendix. Any non-conformances with the data package were noted on the worksheet and then appropriate flags were assigned to the data.

Acetone and methylene chloride are used as extraction solvents; hence, they are common laboratory contaminants. When detected in a sample, the concentration reported is the actual concentration in the sample; blank subtraction (concentration in the corresponding method blank minus the concentration in the sample) was not used. Therefore all the Acetone and methylene chloride detected in these specific samples can be attributed to laboratory contamination.

Five organic compounds were detected in the subsurface soil samples collected at Site 2:

- Acetone
- Carbon disulfide
- Di-n-butylphthalate
- Methylene chloride
- bis(2-ethylhexyl)phthalate

These compounds were detected in the corresponding field and laboratory blanks; therefore, they can be attributed to field and laboratory contamination.

The data are acceptable as is and can be used in the decision-making process without further qualification.

# DATA VALIDATION

CASE:_____ SITE:_____ ANALYSIS:_____

LAB NOTES:_____

_____

_____

HOLDING TIMES:_____

NUMBER OF SAMPLES: Soil_____ Water _____

CALIBRATION
Initial:_____

_____

Continuing:_____

_____

COEFFICIENT:_____

BLANKS
Method:_____

Field:_____

FIELD DUPLICATES:_____

SURROGATES:_____

MS/MSD:_____

INTERNAL STANDARDS:_____ TUNING:_____

OTHER:_____

_____

SUMMARY:_____

_____

_____

_____

_____

## Attachment 1
# DATA INVENTORY TABLE

Date: 10-Jun-91
Time: 02:07 PM
Filename: 27526COC.WK1

# DANNELLY ANG
# FIELD EFFORT
# DATA INVENTORY
# ATTACHMENT 1
# 10-Jun-91

| SITE | FIELD SAMPLE ID | DATE SAMPLED | QC LEVEL | MATRIX | MGM LAB NUMBER | VOC CLP | SV CLP | TOTAL METALS | SOLUABLE METALS | TPH | PAH | BTEX | DATE SUBMITTED TO LAB |
|---|---|---|---|---|---|---|---|---|---|---|---|---|---|
| 4 | A1-SS-0-6 | 02/21/91 | C | SOIL | 17894-001 | | | | | | X | | 02/22/91 |
| 4 | A1-SS-6-24 | 02/21/91 | C | SOIL | 17894-002 | | | | | | X | | 02/22/91 |
| 4 | A2-SS-0-6 | 02/21/91 | C | SOIL | 17894-003 | | | | | | X | | 02/22/91 |
| 4 | A2-SS-6-24 | 02/21/91 | C | SOIL | 17894-004 | | | | | | X | | 02/22/91 |
| 4 | A3-SS-0-6 | 02/21/91 | C | SOIL | 17894-005 | | | | | | X | | 02/22/91 |
| 4 | A3-SS-0-6DUP | 02/21/91 | C | SOIL | 17894-006 | | | | | | X | | 02/22/91 |
| 4 | A3-SS-6-24 | 02/21/91 | C | SOIL | 17894-007 | | | | | | X | | 02/22/91 |
| 4 | A3-SS-6-24DUP | 02/21/91 | C | SOIL | 17894-008 | | | | | | X | | 02/22/91 |
| 4 | A4-SS-0-6 | 02/21/91 | C | SOIL | 17894-009 | | | | | | X | | 02/22/91 |
| 4 | A4-SS-6-24 | 02/21/91 | C | SOIL | 17894-010 | | | | | | X | | 02/22/91 |
| 4 | A5-SS-0-6 | 02/21/91 | C | SOIL | 17894-011 | | | | | | X | | 02/22/91 |
| 4 | A5-SS-6-24 | 02/21/91 | C | SOIL | 17894-012 | | | | | | X | | 02/22/91 |
| 4 | A6-SS-0-6 | 02/22/91 | C | SOIL | 17894-013 | | | | | | X | | 02/22/91 |
| 4 | A6-SS-6-24 | 02/22/91 | C | SOIL | 17894-014 | | | | | | X | | 02/22/91 |
| 4 | A7-SS-0-6 | 02/22/91 | C | SOIL | 17894-015 | | | | | | X | | 02/22/91 |
| 4 | A7-SS-6-24 | 02/22/91 | C | SOIL | 17894-016 | | | | | | X | | 02/22/91 |
| 4 | A8-SS-0-6 | 02/22/91 | C | SOIL | 17894-017 | | | | | | X | | 02/22/91 |
| 4 | A8-SS-6-24 | 02/22/91 | C | SOIL | 17894-018 | | | | | | X | | 02/22/91 |
| QC | EQUIPMENT RINSATE | 02/22/91 | C | WATER | 17894-020 | | | | | | X | | 02/22/91 |
| | | | | | | | | | | | | | |
| 4 | A1-SS-6-24 | 02/21/91 | C | SOIL | 17898-001 | | | | | X | | | 02/22/91 |
| 4 | A4-SS-6-24 | 02/21/91 | C | SOIL | 17898-002 | | | | | X | | | 02/22/91 |
| 4 | A7-SS-6-24 | 02/21/91 | C | SOIL | 17898-003 | | | | | X | | | 02/22/91 |

Date: 10-Jun-91
Time: 02:07 PM
Filename: 27526COC.WK1

# DANNELLY ANG
# FIELD EFFORT
# DATA INVENTORY
# ATTACHMENT 1
# 10-Jun-91

| SITE | FIELD SAMPLE ID | DATE SAMPLED | QC LEVEL | MATRIX | MGM LAB NUMBER | VOC CLP | SV CLP | TOTAL METALS | SOLUABLE METALS | TPH | PAH | BTEX | DATE SUBMITTED TO LAB |
|---|---|---|---|---|---|---|---|---|---|---|---|---|---|
| 4 | A7-SS-6-24DUP | 02/21/91 | C | SOIL | 17898-004 | | | | | X | | | 02/22/91 |
| | | | | | | | | | | | | | |
| BKGD | B3P-S-8.5-10 | 02/27/91 | B | SOIL | 17931-001 | | | | | X | | | 02/28/91 |
| BKGD | B3P-S-13.5-15 | 02/27/91 | B | SOIL | 17931-002 | | | | | X | | | 02/28/91 |
| BKGD | B3P-S-28.5-30 | 02/27/91 | B | SOIL | 17931-003 | | | | | X | | | 02/28/91 |
| | | | | | | | | | | | | | |
| BKGD | B1P-S-0-2 | 02/26/91 | B | SOIL | 17937-001 | | | | | X | | | 02/27/91 |
| BKGD | B1P-S-8.5-10 | 02/26/91 | B | SOIL | 17937-002 | | | | | | | | 02/27/91 |
| BKGD | B1P-S-18.5-20 | 02/26/91 | B | SOIL | 17937-003 | | | | | | | | 02/27/91 |
| BKGD | B1P-S-18.5-20DUP | 02/26/91 | B | SOIL | 17937-004 | | | | | X | | | 02/27/91 |
| BKGD | B5P-S-0-2 | 02/26/91 | B | SOIL | 17937-005 | | | | | X | | | 02/27/91 |
| BKGD | B5P-S-8.5-10 | 02/26/91 | B | SOIL | 17937-006 | | | | | X | | | 02/27/91 |
| BKGD | B5P-S-23.0-25 | 02/26/91 | B | SOIL | 17937-007 | | | | | X | | | 02/27/91 |
| BKGD | B5P-S-23.0-25DUP | 02/26/91 | B | SOIL | 17937-008 | | | | | | | | 02/27/91 |
| QC | TRAVEL BLANK | 02/26/91 | B | SOIL | 17937-009 | | | | | | | | 02/27/91 |
| QC | ERB-01-2-26 | 02/26/91 | B | SOIL | 17937-010 | | | | | | | | 02/27/91 |
| | | | | | | | | | | | | | |
| 2 | 02B-S-0-2 | 02/28/91 | B | SOIL | 17946-001 | | | | | X | | | 03/01/91 |
| 2 | 02B-S-12-14 | 02/28/91 | B | SOIL | 17946-002 | | | | | X | | | 03/01/91 |
| 2 | 02B-S-18-20 | 02/28/91 | B | SOIL | 17946-003 | | | | | X | | | 03/01/91 |
| 1 | P2B-S-2-4 | 02/28/91 | B | SOIL | 17946-004 | | | | | X | | | 03/01/91 |
| 1 | P2B-S-8-10 | 02/28/91 | B | SOIL | 17946-005 | | | | | X | | | 03/01/91 |
| 1 | P2B-S-8-10DUP | 02/28/91 | B | SOIL | 17946-006 | | | | | X | | | 03/01/91 |

Date: 10-Jun-91

Time: 02:07 PM

Filename: 27526COC.WK1

# DANNELLY ANG
# FIELD EFFORT
# DATA INVENTORY
# ATTACHMENT 1
# 10-Jun-91

| SITE | FIELD SAMPLE ID | DATE SAMPLED | QC LEVEL | MATRIX | MGM LAB NUMBER | VOC CLP | SV CLP | TOTAL METALS | SOLUABLE METALS | TPH | PAH | BTEX | DATE SUBMITTED TO LAB |
|---|---|---|---|---|---|---|---|---|---|---|---|---|---|
| 1 | P2B-S-12-14 | 02/28/91 | B | SOIL | 17946-007 | | | | | X | | | 03/01/91 |
| 1 | P3B-S-2-4 | 02/28/91 | B | SOIL | 17946-008 | | | | | X | | | 03/01/91 |
| 1 | P3B-S-6-8 | 02/28/91 | B | SOIL | 17946-009 | | | | | X | | | 03/01/91 |
| 1 | P3B-S-12-14 | 02/28/91 | B | SOIL | 17946-010 | | | | | X | | | 03/01/91 |
| 1 | P5B-S-4-6 | 02/28/91 | B | SOIL | 17946-011 | | | | | X | | | 03/01/91 |
| 1 | P5B-S-8-10 | 02/28/91 | B | SOIL | 17946-012 | | | | | X | | | 03/01/91 |
| 1 | P5B-S-12-14 | 02/28/91 | B | SOIL | 17946-013 | | | | | X | | | 03/01/91 |
| | | | | | | | | | | | | | |
| 2 | 04BS-0-2 | 03/01/91 | B | SOIL | 17947-001 | | | | | X | | | 03/01/91 |
| 2 | 04BS-6-8 | 03/01/91 | B | SOIL | 17947-002 | | | | | X | | | 03/01/91 |
| 2 | 04BS-14-16 | 03/01/91 | B | SOIL | 17947-003 | | | | | X | | | 03/01/91 |
| 2 | 04BS-14-16DUP | 03/01/91 | B | SOIL | 17947-004 | | | | | X | | | 03/01/91 |
| | | | | | | | | | | | | | |
| 1 | P1BS-2-4 | 03/05/91 | B | SOIL | 17966-001 | | | | | X | | | 03/05/91 |
| 1 | P1BS-8-10 | 03/05/91 | B | SOIL | 17966-002 | | | | | X | | | 03/05/91 |
| 1 | P1BS-8-10DUP | 03/05/91 | B | SOIL | 17966-003 | | | | | X | | | 03/05/91 |
| 1 | P1BS-12-14 | 03/05/91 | B | SOIL | 17966-004 | | | | | X | | | 03/05/91 |
| 1 | P6BS-6-8 | 03/05/91 | B | SOIL | 17966-005 | | | | | X | | | 03/05/91 |
| 1 | P6BS-8-10 | 03/05/91 | B | SOIL | 17966-006 | | | | | X | | | 03/05/91 |
| 1 | P6BS-12-14 | 03/05/91 | B | SOIL | 17966-007 | | | | | X | | | 03/05/91 |
| 1 | P7BS-6-8 | 03/05/91 | B | SOIL | 17966-008 | | | | | X | | | 03/05/91 |
| 1 | P7BS-8-10 | 03/05/91 | B | SOIL | 17966-009 | | | | | X | | | 03/05/91 |
| 1 | P7BS-12-14 | 03/05/91 | B | SOIL | 17966-010 | | | | | X | | | 03/05/91 |

Date: 10-Jun-91
Time: 02:07 PM
Filename: 27526COC.WK1

# DANNELLY ANG
# FIELD EFFORT
# DATA INVENTORY
# ATTACHMENT 1
# 10-Jun-91

| SITE | FIELD SAMPLE ID | DATE SAMPLED | QC LEVEL | MATRIX | MGM LAB NUMBER | VOC CLP | SV CLP | TOTAL METALS | SOLUABLE METALS | TPH | PAH | BTEX | DATE SUBMITTED TO LAB |
|---|---|---|---|---|---|---|---|---|---|---|---|---|---|
| 1 | P4BS-2-4 | 03/05/91 | B | SOIL | 17966-011 | | | | | X | | | 03/05/91 |
| 1 | P4BS-6-8 | 03/05/91 | B | SOIL | 17966-012 | | | | | X | | | 03/05/91 |
| 1 | P4BS-12-14 | 03/05/91 | B | SOIL | 17966-013 | | | | | X | | | 03/05/91 |
| 1 | P8BS-2-4 | 03/05/91 | B | SOIL | 17966-014 | | | | | X | | | 03/05/91 |
| 1 | P8BS-6-8 | 03/05/91 | B | SOIL | 17966-015 | | | | | X | | | 03/05/91 |
| 1 | P8BS-12-14 | 03/05/91 | B | SOIL | 17966-016 | | | | | X | | | 03/05/91 |
| | | | | | | | | | | | | | |
| 2 | 04BS-0-2 | 03/06/91 | B | SOIL | 17978-001 | | | | | X | | | 03/06/91 |
| 2 | 04BS-6-8 | 03/06/91 | B | SOIL | 17978-002 | | | | | X | | | 03/06/91 |
| 2 | 04BS-14-16 | 03/06/91 | B | SOIL | 17978-003 | | | | | X | | | 03/06/91 |
| 2 | 04BS-14-16DUP | 03/06/91 | B | SOIL | 17978-004 | | | | | X | | | 03/06/91 |
| 2 | 01BS-0-2 | 03/06/91 | B | SOIL | 17978-005 | | | | | X | | | 03/06/91 |
| 2 | 01BS-10-12 | 03/06/91 | B | SOIL | 17978-006 | | | | | X | | | 03/06/91 |
| 2 | 01BS-14-16 | 03/06/91 | B | SOIL | 17978-007 | | | | | X | | | 03/06/91 |
| 2 | 05BS-0-2 | 03/06/91 | B | SOIL | 17978-008 | | | | | X | | | 03/06/91 |
| 2 | 05BS-8-10 | 03/06/91 | B | SOIL | 17978-009 | | | | | X | | | 03/06/91 |
| 2 | 05BS-12-14 | 03/06/91 | B | SOIL | 17978-010 | | | | | X | | | 03/06/91 |
| 2 | 03BS-0-2 | 03/06/91 | B | SOIL | 17978-011 | | | | | X | | | 03/06/91 |
| 2 | 03BS-6-8 | 03/06/91 | B | SOIL | 17978-012 | | | | | X | | | 03/06/91 |
| 2 | 03BS-12-14 | 03/06/91 | B | SOIL | 17978-013 | | | | | X | | | 03/06/91 |
| 2 | 03BS-12-14DUP | 03/06/91 | B | SOIL | 17978-014 | | | | | X | | | 03/06/91 |
| | | | | | | | | | | | | | |
| 4 | A1BS-0-2 | 03/07/91 | B | SOIL | 17995-001 | | | | | X | | | 03/07/91 |

Date: 10-Jun-91
Time: 02:07 PM
Filename: 27526COC.WK1

# DANNELLY ANG
# FIELD EFFORT
# DATA INVENTORY
# ATTACHMENT 1
# 10-Jun-91

| SITE | FIELD SAMPLE ID | DATE SAMPLED | QC LEVEL | MATRIX | MGM LAB NUMBER | VOC CLP | SV CLP | TOTAL METALS | SOLUABLE METALS | TPH | PAH | BTEX | DATE SUBMITTED TO LAB |
|---|---|---|---|---|---|---|---|---|---|---|---|---|---|
| 4 | A1BS-8-10 | 03/07/91 | B | SOIL | 17995-002 | | | | | X | | | 03/07/91 |
| 4 | A1BS-16-18 | 03/07/91 | B | SOIL | 17995-003 | | | | | X | | | 03/07/91 |
| 4 | A3BS-0-2 | 03/07/91 | B | SOIL | 17995-004 | | | | | X | | | 03/07/91 |
| 4 | A3BS-8-10 | 03/07/91 | B | SOIL | 17995-005 | | | | | X | | | 03/07/91 |
| 4 | A3BS-18-20 | 03/07/91 | B | SOIL | 17995-006 | | | | | X | | | 03/07/91 |
| 4 | A3BS-18-20DUP | 03/07/91 | B | SOIL | 17995-007 | | | | | X | | | 03/07/91 |
| | | | | | | | | | | | | | |
| 4 | A2BS-4-6 | 03/08/91 | B | SOIL | 18000-001 | | | | | X | | | 03/08/91 |
| 4 | A2BS-12-14 | 03/08/91 | B | SOIL | 18000-002 | | | | | X | | | 03/08/91 |
| 4 | A2BS-18-20 | 03/08/91 | B | SOIL | 18000-003 | | | | | X | | | 03/08/91 |
| | | | | | | | | | | | | | |
| BKGD | BG-MW-6 | 04/10/91 | C | WATER | 18301-001 | X | | X | X | | | | 04/11/91 |
| BKGD | BG-MW-6-DMS | 04/10/91 | C | WATER | 18301-004 | X | | X | | | | | 04/11/91 |
| BKGD | BG-MW-6-FB | 04/10/91 | C | WATER | 18301-006 | X | | X | | | | | 04/11/91 |
| BKGD | BG-MW-6-ER | 04/10/91 | C | WATER | 18301-008 | X | | X | | | | | 04/11/91 |
| BKGD | TRAVEL BLANK | 04/10/91 | C | WATER | 18301-009 | X | | | | | | | 04/11/91 |
| | | | | | | | | | | | | | |
| BKGD | BG-2P | 04/12/91 | B | WATER | 18311-001 | X | | X | X | | | | 04/13/91 |
| | | | | | | | | | | | | | |
| 4 | A1-SS-0-6 | 02/22/91 | C | SOIL | 28891-001 | | | | | | | X | 04/23/91 |
| 4 | A1-SS-6-24 | 02/22/91 | C | SOIL | 28891-002 | | | | | | | X | 04/23/91 |
| 4 | A2-SS-0-6 | 02/22/91 | C | SOIL | 28891-003 | | | | | | | X | 04/23/91 |
| 4 | A2-SS-6-24 | 02/22/91 | C | SOIL | 28891-004 | | | | | | | X | 04/23/91 |

Date: 10-Jun-91
Time: 02:07 PM
Filename: 27526COC.WK1

# DANNELLY ANG
# FIELD EFFORT
# DATA INVENTORY
# ATTACHMENT 1
# 10-Jun-91

| SITE | FIELD SAMPLE ID | DATE SAMPLED | QC LEVEL | MATRIX | MGM LAB NUMBER | VOC CLP | SV CLP | TOTAL METALS | SOLUABLE METALS | TPH | PAH | BTEX | DATE SUBMITTED TO LAB |
|---|---|---|---|---|---|---|---|---|---|---|---|---|---|
| 4 | A3-SS-0-6 | 02/22/91 | C | SOIL | 28891-005 | | | | | | | X | 04/23/91 |
| 4 | A3-SS-0-6DUP | 02/22/91 | C | SOIL | 28891-006 | | | | | | | X | 04/23/91 |
| 4 | A3-SS-6-24 | 02/22/91 | C | SOIL | 28891-007 | | | | | | | X | 04/23/91 |
| 4 | A3-SS-6-24DUP | 02/22/91 | C | SOIL | 28891-008 | | | | | | | X | 04/23/91 |
| 4 | A4-SS-0-6 | 02/22/91 | C | SOIL | 28891-009 | | | | | | | X | 04/23/91 |
| 4 | A4-SS-6-24 | 02/22/91 | C | SOIL | 28891-010 | | | | | | | X | 04/23/91 |
| 4 | A5-SS-0-6 | 02/22/91 | C | SOIL | 28891-011 | | | | | | | X | 04/23/91 |
| 4 | A5-SS-6-24 | 02/22/91 | C | SOIL | 28891-012 | | | | | | | X | 04/23/91 |
| 4 | A6-SS-0-6 | 02/22/91 | C | SOIL | 28891-013 | | | | | | | X | 04/23/91 |
| 4 | A6-SS-6-24 | 02/22/91 | C | SOIL | 28891-014 | | | | | | | X | 04/23/91 |
| 4 | A7-SS-0-6 | 02/22/91 | C | SOIL | 28891-015 | | | | | | | X | 04/23/91 |
| 4 | A7-SS-6-24 | 02/22/91 | C | SOIL | 28891-016 | | | | | | | X | 04/23/91 |
| 4 | A8-SS-0-6 | 02/22/91 | C | SOIL | 28891-017 | | | | | | | X | 04/23/91 |
| 4 | A8-SS-6-24 | 02/22/91 | C | SOIL | 28891-018 | | | | | | | X | 04/23/91 |
| QC | Trip Blank | 02/22/91 | C | WATER | 28891-019 | | | | | | | X | 04/23/91 |
| QC | ER-1 | 02/22/91 | C | WATER | 28891-020 | | | | | | | X | 04/23/91 |
| | | | | | | | | | | | | | |
| BKGD | B1P-S-0-2 | 02/26/91 | C | SOIL | 28909-001 | X | X | X | | | | | 02/27/91 |
| BKGD | B1P-S-8.5-10 | 02/26/91 | C | SOIL | 28909-002 | X | X | X | | | | | 02/27/91 |
| BKGD | B1P-S-18.5-20 | 02/26/91 | C | SOIL | 28909-003 | X | X | X | | | | | 02/27/91 |
| BKGD | B1P-S-18.5-20DUP | 02/26/91 | C | SOIL | 28909-004 | X | X | X | | | | | 02/27/91 |
| BKGD | B5P-S-0-2 | 02/26/91 | C | SOIL | 28909-005 | X | X | X | | | | | 02/27/91 |
| BKGD | B5P-S-8.5-10 | 02/26/91 | C | SOIL | 28909-006 | X | X | X | | | | | 02/27/91 |

Date: 10-Jun-91

Time: 02:07 PM

Filename: 27526COC.WK1

# DANNELLY ANG
# FIELD EFFORT
# DATA INVENTORY
# ATTACHMENT 1
# 10-Jun-91

| SITE | FIELD SAMPLE ID | DATE SAMPLED | QC LEVEL | MATRIX | MGM LAB NUMBER | VOC CLP | SV CLP | TOTAL METALS | SOLUABLE METALS | TPH | PAH | BTEX | DATE SUBMITTED TO LAB |
|---|---|---|---|---|---|---|---|---|---|---|---|---|---|
| BKGD | B5P-S-23.0-25 | 02/26/91 | C | SOIL | 28909-007 | X | X | X | | | | | 02/27/91 |
| BKGD | B5P-S-23.0-25DUP | 02/26/91 | C | SOIL | 28909-008 | X | X | X | | | | | 02/27/91 |
| QC | Travel Blank 2-26 | 02/26/91 | C | WATER | 28909-009 | X | | | | | | | 02/27/91 |
| QC | ERB-01-2-26 | 02/26/91 | C | WATER | 28909-010 | X | X | X | | | | | 02/27/91 |
| | | | | | | | | | | | | | |
| BKGD | B3P-S-8.5-10 | 02/27/91 | C | SOIL | 28922-001 | X | X | X | | | | | 02/28/91 |
| BKGD | B3P-S-13.5-15 | 02/27/91 | C | SOIL | 28922-002 | X | X | X | | | | | 02/28/91 |
| BKGD | B3P-S-28.5-30 | 02/27/91 | C | SOIL | 28922-003 | X | X | X | | | | | 02/28/91 |
| QC | ERB-02-2-27 | 02/27/91 | C | WATER | 28922-004 | X | X | X | | | | | 02/28/91 |
| | | | | | | | | | | | | | |
| 2 | 02B-S-0-2 | 02/28/91 | C | SOIL | 28934-001 | X | X | | | | | | 03/01/91 |
| 2 | 02B-S-12-14 | 02/28/91 | C | SOIL | 28934-002 | X | X | | | | | | 03/01/91 |
| 2 | 02B-S-18-20 | 02/28/91 | C | SOIL | 28934-003 | X | X | X | | | | | 03/01/91 |
| 1 | P2B-S-2-4 | 02/28/91 | C | SOIL | 28934-004 | | | | | | | X | 03/01/91 |
| 1 | P2B-S-8-10 | 02/28/91 | C | SOIL | 28934-005 | | | | | | | X | 03/01/91 |
| 1 | P2B-S-8-10DUP | 02/28/91 | C | SOIL | 28934-006 | | | | | | | X | 03/01/91 |
| 1 | P2B-S-12-14 | 02/28/91 | C | SOIL | 28934-007 | | | | | | | X | 03/01/91 |
| 1 | P3B-S-2-4 | 02/28/91 | C | SOIL | 28934-008 | | | | | | | X | 03/01/91 |
| 1 | P3B-S-6-8 | 02/28/91 | C | SOIL | 28934-009 | | | | | | | X | 03/01/91 |
| 1 | P3B-S-12-14 | 02/28/91 | C | SOIL | 28934-010 | | | | | | | X | 03/01/91 |
| 1 | P5B-S-4-6 | 02/28/91 | C | SOIL | 28934-011 | | | | | | | X | 03/01/91 |
| 1 | P5B-S-8-10 | 02/28/91 | C | SOIL | 28934-012 | | | | | | | X | 03/01/91 |
| 1 | P5B-S-12-14 | 02/28/91 | C | SOIL | 28934-013 | | | | | | | X | 03/01/91 |

Date: 10-Jun-91
Time: 02:07 PM
Filename: 27526COC.WK1

# DANNELLY ANG
# FIELD EFFORT
# DATA INVENTORY
# ATTACHMENT 1
# 10-Jun-91

| SITE | FIELD SAMPLE ID | DATE SAMPLED | QC LEVEL | MATRIX | MGM LAB NUMBER | VOC CLP | SV CLP | TOTAL METALS | SOLUABLE METALS | TPH | PAH | BTEX | DATE SUBMITTED TO LAB |
|---|---|---|---|---|---|---|---|---|---|---|---|---|---|
| QC | ERB-03-2-28 | 02/28/91 | C | WATER | 28934-014 | | | | | | | X | 03/01/91 |
| QC | TRV-02-2-28 | 02/28/91 | C | WATER | 28934-015 | | | | | | | X | 03/01/91 |
| | | | | | | | | | | | | | |
| | P5-BW1 | 03/04/91 | B | WATER | 28972-001 | | | | | | X | X | 03/05/91 |
| | | | | | | | | | | | | | |
| QC | FB-01-3-4 | 03/04/91 | C | WATER | 28973-001 | X | X | X | | | | | 03/05/91 |
| QC | Travel Blank | 03/04/91 | C | WATER | 28973-002 | X | | | | | | | 03/05/91 |
| | | | | | | | | | | | | | |
| 1 | P1BS-2-4 | 03/05/91 | C | SOIL | 28998-001 | | | | | | | X | 03/06/91 |
| 1 | P1BS-8-10 | 03/05/91 | C | SOIL | 28998-002 | | | | | | | X | 03/06/91 |
| 1 | P1BS-8-10DUP | 03/05/91 | C | SOIL | 28998-003 | | | | | | | X | 03/06/91 |
| 1 | P1BS-12-14 | 03/05/91 | C | SOIL | 28998-004 | | | | | | | X | 03/06/91 |
| 1 | P6BS-6-8 | 03/05/91 | C | SOIL | 28998-005 | | | | | | | X | 03/06/91 |
| 1 | P6BS-8-10 | 03/05/91 | C | SOIL | 28998-006 | | | | | | | X | 03/06/91 |
| 1 | P6BS-12-14 | 03/05/91 | C | SOIL | 28998-007 | | | | | | | X | 03/06/91 |
| 1 | P7BS-6-8 | 03/05/91 | C | SOIL | 28998-008 | | | | | | | X | 03/06/91 |
| 1 | P7BS-8-10 | 03/05/91 | C | SOIL | 28998-009 | | | | | | | X | 03/06/91 |
| 1 | P7BS-12-14 | 03/05/91 | C | SOIL | 28998-010 | | | | | | | X | 03/06/91 |
| 1 | P4BS-2-4 | 03/05/91 | C | SOIL | 28998-011 | | | | | | | X | 03/06/91 |
| 1 | P4BS-6-8 | 03/05/91 | C | SOIL | 28998-012 | | | | | | | X | 03/06/91 |
| 1 | P4BS-12-14 | 03/05/91 | C | SOIL | 28998-013 | | | | | | | X | 03/06/91 |
| 1 | P8BS-2-4 | 03/05/91 | C | SOIL | 28998-014 | | | | | | | X | 03/06/91 |
| 1 | P8BS-6-8 | 03/05/91 | C | SOIL | 28998-015 | | | | | | | X | 03/06/91 |

Date: 10-Jun-91

Time: 02:07 PM

Filename: 27526COC.WK1

# DANNELLY ANG
# FIELD EFFORT
# DATA INVENTORY
# ATTACHMENT 1
# 10-Jun-91

| SITE | FIELD SAMPLE ID | DATE SAMPLED | QC LEVEL | MATRIX | MGM LAB NUMBER | VOC CLP | SV CLP | TOTAL METALS | SOLUABLE METALS | TPH | PAH | BTEX | DATE SUBMITTED TO LAB |
|---|---|---|---|---|---|---|---|---|---|---|---|---|---|
| 1 | P8BS-12-14 | 03/05/91 | C | SOIL | 28998-016 | | | | | | | X | 03/06/91 |
| QC | ERB-04-3-5 | 03/05/91 | C | WATER | 28998-017 | | | | | | | X | 03/06/91 |
| QC | Travel Blank | 03/05/91 | C | WATER | 28998-018 | | | | | | | X | 03/06/91 |
| | | | | | | | | | | | | | |
| 2 | 04BS-0-2 | 03/06/91 | C | SOIL | 29017-001 | X | X | | | | | | 03/07/91 |
| 2 | 04BS-6-8 | 03/06/91 | C | SOIL | 29017-002 | X | X | X | | | | | 03/07/91 |
| 2 | 04BS-14-16 | 03/06/91 | C | SOIL | 29017-003 | X | X | | | | | | 03/07/91 |
| 2 | 04BS-14-16DUP | 03/06/91 | C | SOIL | 29017-004 | X | X | | | | | | 03/07/91 |
| 2 | 01BS-0-2 | 03/06/91 | C | SOIL | 29017-005 | X | X | | | | | | 03/07/91 |
| 2 | 01BS-10-12 | 03/06/91 | C | SOIL | 29017-006 | X | X | | | | | | 03/07/91 |
| 2 | 01BS-14-16 | 03/06/91 | C | SOIL | 29017-007 | X | X | X | | | | | 03/07/91 |
| 2 | 05BS-0-2 | 03/06/91 | C | SOIL | 29017-008 | X | X | X | | | | | 03/07/91 |
| 2 | 05BS-8-10 | 03/06/91 | C | SOIL | 29017-009 | X | X | | | | | | 03/07/91 |
| 2 | 05BS-12-14 | 03/06/91 | C | SOIL | 29017-010 | X | X | | | | | | 03/07/91 |
| 2 | 03BS-0-2 | 03/06/91 | C | SOIL | 29017-011 | X | X | | | | | | 03/07/91 |
| 2 | 03BS-6-8 | 03/06/91 | C | SOIL | 29017-012 | X | X | | | | | | 03/07/91 |
| 2 | 03BS-12-14 | 03/06/91 | C | SOIL | 29017-013 | X | X | X | | | | | 03/07/91 |
| 2 | 03BS-12-14DUP | 03/06/91 | C | SOIL | 29017-014 | X | X | X | | | | | 03/07/91 |
| QC | ERB-05-3-6 | 03/06/91 | C | WATER | 29017-015 | X | X | X | | | | | 03/07/91 |
| QC | Travel Blank | 03/06/91 | C | WATER | 29017-016 | X | | | | | | | 03/07/91 |
| | | | | | | | | | | | | | |
| QC | FB-03-3-7 | 03/07/91 | C | WATER | 29032-001 | X | X | X | | | | | 03/08/91 |
| QC | FB-02-3-7 | 03/07/91 | C | WATER | 29032-002 | X | X | X | | | | | 03/08/91 |

Date: 10-Jun-91
Time: 02:07 PM
Filename: 27526COC.WK1

# DANNELLY ANG
# FIELD EFFORT
# DATA INVENTORY
# ATTACHMENT 1
# 10-Jun-91

| SITE | FIELD SAMPLE ID | DATE SAMPLED | QC LEVEL | MATRIX | MGM LAB NUMBER | VOC CLP | SV CLP | TOTAL METALS | SOLUABLE METALS | TPH | PAH | BTEX | DATE SUBMITTED TO LAB |
|---|---|---|---|---|---|---|---|---|---|---|---|---|---|
| QC | ERB-06-3-7 | 03/07/91 | C | WATER | 29032-003 | | | | | | X | X | 03/08/91 |
| 1 | P7BW | 03/07/91 | C | WATER | 29032-004 | | | | | | X | X | 03/08/91 |
| QC | Travel Blank | 03/07/91 | C | WATER | 29032-005 | X | | | | | | | 03/08/91 |
| 4 | A1BS-0-2 | 03/07/91 | C | WATER | 29032-006 | | | | | | X | X | 03/08/91 |
| 4 | A1BS-8-10 | 03/07/91 | C | WATER | 29032-007 | | | | | | X | X | 03/08/91 |
| 4 | A1BS-16-18 | 03/07/91 | C | WATER | 29032-008 | | | | | | X | X | 03/08/91 |
| 4 | A3BS-0-2 | 03/07/91 | C | WATER | 29032-009 | | | | | | X | X | 03/08/91 |
| 4 | A3BS-8-10 | 03/07/91 | C | WATER | 29032-010 | | | | | | X | X | 03/08/91 |
| 4 | A3BS-18-20 | 03/07/91 | C | WATER | 29032-011 | | | | | | X | X | 03/08/91 |
| 4 | A3BS-18-20DUP | 03/07/91 | C | WATER | 29032-012 | | | | | | X | | 03/08/91 |
| | | | | | | | | | | | | | |
| QC | ERB-06-3-7 | 03/07/91 | C | SOIL | 29041-001 | | | | | | X | X | 03/08/91 |
| QC | P7BW | 03/07/91 | C | SOIL | 29041-002 | | | | | | X | X | 03/08/91 |
| | | | | | | | | | | | | | |
| 4 | A2BS-4-6 | 03/08/91 | C | SOIL | 29046-001 | | | | | | X | X | 03/09/91 |
| 4 | A2BS-12-14 | 03/08/91 | C | SOIL | 29046-002 | | | | | | X | X | 03/09/91 |
| 4 | A2BS-18-20 | 03/08/91 | C | SOIL | 29046-004 | | | | | | X | X | 03/09/91 |
| QC | ERB-07-3-8 | 03/08/91 | C | WATER | 29046-005 | | | | | | X | X | 03/09/91 |
| 4 | A2BS-12-14DUP | 03/08/91 | C | SOIL | 29046-003 | | | | | | | X | 03/09/91 |
| QC | TRAVEL BLANK | 03/08/91 | C | WATER | 29046-006 | | | | | | | X | 03/09/91 |

## Attachment 2
# DATA VALIDATION WORKSHEETS

DATA VALIDATION

CASE: 17894 SITE: 4 ANALYSIS: PAH

LAB NOTES: 3 re-extractions were past holding times (-5, -6, -7)

HOLDING TIMES: 2/25 (extract) - 2/21 (sampling) = ok

NUMBER OF SAMPLES: Soil 18 Water 1 - ERB

CALIBRATION
Initial: ok

Continuing: ok

COEFFICIENT:

BLANKS
Method: nothing found

Field: nothing found

* FIELD DUPLICATES: both dups are at least 10x smaller conc. than native

SURROGATES: water ok soil - 73-115 ok Terp d14 aq. = ok soil = ok

MS/MSD: good

INTERNAL STANDARDS: TUNING:

OTHER:

SUMMARY: MGM doesn't have the co-elution problem RDD has. The re-runs concentrations of -5 and -7 were smaller than the original conc. which may have been due to non-homogeneity of sample +/or holding time expiration - I used conc. of original ~~sample~~ analysis.

# DATA VALIDATION

CASE: 17898 SITE: 4 ANALYSIS: TPH

LAB NOTES: none

HOLDING TIMES: 3/18 an. - 2/21 sa = 34 days

NUMBER OF SAMPLES: Soil 4 Water

CALIBRATION
Initial: ok

Continuing: ok

COEFFICIENT: $r$ 0.9998

BLANKS
Method: no hits

Field: none

FIELD DUPLICATES: none

SURROGATES: not found

MS/MSD: " "

INTERNAL STANDARDS: ~~TUNING:~~ LCS - ok

OTHER:

SUMMARY: Results 1 - U 2 - 32 mg/Kg 3 - 11.0 mg/Kg
4 - 9.1 " B1 - U -

# DATA VALIDATION

CASE: 17931 SITE: BKGD ANALYSIS: TPH

LAB NOTES: no problems

HOLDING TIMES: 3/20 - 2/27 = 21 days

NUMBER OF SAMPLES: Soil 3 Water —

CALIBRATION
Initial: ok ICV

Continuing: ok CCV

COEFFICIENT: 0.9998

BLANKS
Method: nothing found

Field: none

FIELD DUPLICATES: none

SURROGATES: —

MS/MSD: 94.6 % R

INTERNAL STANDARDS: — ~~TUNING~~: LCS - ok

OTHER:

SUMMARY: 3 samples -001 5.4 mg/Kg
results: -002 572 " with 10x dilution
-003 28.4

# DATA VALIDATION

CASE: 17937 SITE: BKGD ANALYSIS: TPH

LAB NOTES:

HOLDING TIMES: 3/20 analysis - 2/26 sampled = ok [28 day limit]

NUMBER OF SAMPLES: Soil 7 Water

CALIBRATION
Initial: ICV - ok
CCV = ok

Continuing: CCV - ok

COEFFICIENT: 0.9999 ok

BLANKS
Method: no hits

Field: none

FIELD DUPLICATES: ~~700~~ 0%D

SURROGATES: NA

MS/MSD: no data

INTERNAL STANDARDS: NA ~~TUNING:~~ LCS - ok

OTHER: -2 + -3 not listed on inventory but is requested on C of C.

SUMMARY: There were concentrations detected in each sample - range 3.6 - 10.0 mg/Kg

DATA VALIDATION

CASE: 17946 SITE: 2 - 1 ANALYSIS: TPH

LAB NOTES: no problems

HOLDING TIMES: 3/20 analysis - 2/28 sampled = 20 days

NUMBER OF SAMPLES: Soil 13 Water —

CALIBRATION
Initial: ICV - ok

Continuing: CCV - ok

COEFFICIENT: 0.9999

BLANKS
Method: no hits

Field: none

FIELD DUPLICATES: -5 + -6 not too good = U and 49.3

SURROGATES: —

MS/MSD: 98.6 %R = ok

INTERNAL STANDARDS: — ~~TUNING:~~ LCS - ok

OTHER:

SUMMARY: Sample results: 4 non-detects
range - 4 - 297 mg/Kg
4 over 50; 5 under

In order: 16, U, U, 189, U, ~~49~~ 49.3, 4, 297, 196, U, 205, 33.9, 4.5

DATA VALIDATION

CASE: 17947 SITE: 2 ANALYSIS: TPH

LAB NOTES: no problems

HOLDING TIMES: 3/20 - 3/1 = 19 days

NUMBER OF SAMPLES: Soil 4 Water

CALIBRATION
Initial: ICV - ok

Continuing: CCV - ok

COEFFICIENT: 0.9999 $r^2$

BLANKS
Method: no hits

Field:

FIELD DUPLICATES:

SURROGATES:

MS/MSD: 93.1 %R

INTERNAL STANDARDS: ~~TUNING:~~ LCS - ok

OTHER:

SUMMARY:

Sample -1 12.8 mg/Kg

-2 95.1

-3 37.8

-4 11.3

# DATA VALIDATION

CASE: 17966 SITE: 1 ANALYSIS: TPH

LAB NOTES: none

HOLDING TIMES: 3/27 analysis - 3/5 sampling = 22 days

NUMBER OF SAMPLES: Soil 16 Water

CALIBRATION
Initial: ICV ok

Continuing: CCV ok

COEFFICIENT: 0.9999

BLANKS
Method: nothing found

Field: none

FIELD DUPLICATES: ok

SURROGATES:

MS/MSD: 93.7 %R

INTERNAL STANDARDS: TUNING: LCS - ok

OTHER:

SUMMARY: six samples - U ; seven samples below 10 mg/kg
Three big hits - -1 (585), -11 (538), -12 (275)

# DATA VALIDATION

CASE: 17978 SITE: 2 ANALYSIS: TPH

LAB NOTES: no Comments

HOLDING TIMES: 3/28 - 3/6 = 22 days

NUMBER OF SAMPLES: Soil 14 Water

CALIBRATION
Initial: ICV - ok

Continuing: CCV - ok

COEFFICIENT: 0.9997 ok : $r^2$

BLANKS
Method: nothing found

Field: none

FIELD DUPLICATES: ok

SURROGATES:

MS/MSD: 98 % Rec ok

INTERNAL STANDARDS: ~~TUNING~~: LCS - ok

OTHER:

SUMMARY: Sample 1 - big hit 2120 mg/Kg
2 69.1
10 12.1
4, 8, 9 below 7
the 8 others - U

# DATA VALIDATION

CASE: 17995 SITE: 4 ANALYSIS: TPH

LAB NOTES: no comments

HOLDING TIMES: 3/28 - 3/07 = 21 days

NUMBER OF SAMPLES: Soil 7 Water

CALIBRATION

Initial: ICV 102.5%R ok

Continuing: CCV 102.9%R - ok

COEFFICIENT: 0.9997 $r^2$

BLANKS

Method: no hits

Field: none

FIELD DUPLICATES: -6 + -7 no hits

SURROGATES:

MS/MSD: 100.6%R

INTERNAL STANDARDS: ~~TUNING:~~ LCS = 100.6% - ok

OTHER:

SUMMARY: no hits

# DATA VALIDATION

CASE: 18000 SITE: 4 ANALYSIS: TPH

LAB NOTES: Method 418.1 (MOD)

HOLDING TIMES: 3/31 (analysis) - 3/08 (sampling) = 23

NUMBER OF SAMPLES: Soil 3 Water -

CALIBRATION
Initial: ICV - ok

Continuing: ok

COEFFICIENT: 0.9998 - ok

BLANKS
Method: no detects

Field: none

FIELD DUPLICATES: none

SURROGATES:

MS/MSD: 97.2%R - ok

INTERNAL STANDARDS: TUNING:

OTHER: Control chart LCS = ok

SUMMARY: no detects

# DATA VALIDATION

CASE: 18301 SITE: BKGD ANALYSIS: VOC

LAB NOTES:

HOLDING TIMES:

NUMBER OF SAMPLES: Soil Water 5 (1 sample, 1 dup, 1 FB, 1 ER, 1 TRIP)

CALIBRATION

Initial: ok

Continuing: ok for dates analyzed

only cmpds out were not in samples

COEFFICIENT:

BLANKS

~~Method~~ Field: MeCl 3-22 Acetone 11-18 Toluene 2

~~Field~~ Method: MeCl 1-2 Acetone 9-14 4-Methyl-2-Pentanone 2-2 Xylene 1 2 Hexanone - 2

FIELD DUPLICATES:

SURROGATES: ok d-8 Toluene wide fluctuation but within 3 sd.

MS/MSD: ok

INTERNAL STANDARDS: ok TUNING: ok

OTHER:

SUMMARY:

# DATA VALIDATION

CASE: ~~18300~~ 18301 SITE: BKGD ANALYSIS: TOTAL + SOL INORGANICS

LAB NOTES: Se - 1:5 dilution due to background interference

spike R out

HOLDING TIMES: Hg 4/24 prep - 4/10 samp = 14 days 4/25 analysis

NUMBER OF SAMPLES: Soil Water 5 - 1 TOTAL 1 sol 1 DUP 1 ER 1 FB

CALIBRATION

Initial: ok

Continuing: ok

COEFFICIENT:

BLANKS

Method: 0.1 Hg Pb 2.9 Ba 2.2 Cr 3.6

Field: Ba 2.7 Cr 2.7 Pb 1.3 Ag 10.5

FIELD DUPLICATES: similar Lab duplicates - all below CRDL

SURROGATES:

MS/MSD: Se - 17.8 %R prespike - no problem - both below CRDL 20.9

Se - post-dis. spike - 81.8 %R for the soluble sample; 78.8 for total sample

~~INTERNAL STANDARDS~~: ICS - ok TUNING:

OTHER: LCS - Se = 84.1 %R - 91.8 % R - ok (Limits = 78 - 113)

SUMMARY:

# DATA VALIDATION

CASE: 18311 SITE: BKGD ? ANALYSIS: VOC

LAB NOTES: no matrix spike, no exceptions

HOLDING TIMES: 4/21 analysis - 4/12 sampled = 9 days

NUMBER OF SAMPLES: Soil _____ Water 1

CALIBRATION
Initial: MeCl 26.7 %RSD

Continuing: several over 25%D - MeCl - 28.2 - "J"

COEFFICIENT: —

BLANKS
Method: MeCl - 1 Acetone 12

Field: none

FIELD DUPLICATES: none

SURROGATES: ok

MS/MSD: none

INTERNAL STANDARDS: — TUNING: —

OTHER:

SUMMARY: no hits except the two lab contaminants

DATA VALIDATION

CASE: 18311 SITE: BKGD ANALYSIS: SOL + TOTAL INORGANIC

LAB NOTES: none

HOLDING TIMES: Hg 4/25 - 4/12 = 13 days

NUMBER OF SAMPLES: Soil _____ Water 1

CALIBRATION
Initial: ok

Continuing: ok

COEFFICIENT: for furnace - ok

BLANKS
Method: no hits

Field: none

FIELD DUPLICATES: none

SURROGATES: —

MS/MSD: not requested

INTERNAL STANDARDS: — ~~TUNING:~~ LCS- all in

OTHER:

SUMMARY: no hits for total and soluble metals

Conductivity = 1640 umhos/cm

# DATA VALIDATION

CASE: 28891 SITE: 4 ANALYSIS: BTEX

LAB NOTES: low IS respôses caused 3 surrogate %Rs to be out - these 3 were re-analyzed

HOLDING TIMES: 2/27 analysis - 2/21 sampled = ok

NUMBER OF SAMPLES: Soil 18 Water 2 = 1 Trip + 1 ERB

CALIBRATION

Initial: ok

Continuing: ok except for TBME %D but no hits

COEFFICIENT: ok for 4/1

BLANKS

Method: no hits

Field: no hits

FIELD DUPLICATES: no hits

SURROGATES: all high - range = 102 - 184 averaging about 140

MS/MSD: good

INTERNAL STANDARDS: 7s = low TUNING:

OTHER:

SUMMARY: no hits

1 2 3 5 4

Engineers
Planners
Economists
Scientists

BTEX SURROGATE RECOVERY

Instrument ID: GC-3600

| Date | | Laboratory Reference No. | EPA-602/8020 Surrogate Recovery Fluorobenzene |
|---|---|---|---|
| 2-25-91 | -- | Method Blank | 126 |
| 2-25-91 | -- | 28891 - 1 | 132 |
| 2-25-91 | -- | 28891 - 2 | 130 |
| 2-25-91 | -- | 28891 - 3 | 151 |
| 2-25-91 | -- | 28891 - 4 | 132 |
| 2-25-91 | -- | 28891 - 5 | 142 |
| 2-25-91 | -- | 28891 - 6 | 147 |
| 2-26-91 | -- | 28891 - 7 | 135 |
| 2-26-91 | -- | 28891 - 8 | 140 |
| 2-26-91 | -- | 28891 - 11 | 160 * |
| 2-26-91 | -- | 28891 - 12 | 166 * |
| 2-26-91 | -- | 28891 - 13 | 169 * |
| 2-26-91 | -- | 28891 - 14 | 144 |
| 2-26-91 | -- | Method Blank | 132 |
| 2-26-91 | -- | 28891 - 15 | 149 |
| 2-26-91 | -- | 28891 - 16 | 142 |
| 2-26-91 | -- | 28891 - 17 | 148 |
| 2-26-91 | -- | 28891 - 18 | 143 |
| 2-26-91 | -- | 28891 - 8 MS | 102 |
| 2-26-91 | -- | 28891 - 8 MSD | 110 |
| 2-26-91 | -- | 28891 - 19 | 130 |
| 2-27-91 | -- | 28891 - 20 | 129 |
| 2-27-91 | -- | Method Blank | 125 |
| 2-27-91 | -- | 28891 - 9 | 145 |
| 2-27-91 | -- | 28891 - 10 | 140 |
| 2-27-91 | -- | 28891 - 11-RE | 184 * |
| 2-28-91 | -- | 28891 - 12-RE | 155 * |
| 2-28-91 | -- | 28891 - 13-RE | 163 * |
| | -- | | |
| | -- | | |

EPA 602/8020 surrogate standards reported as percent recovery.
NA = Not Analyzed.

Comments: * Surrogate outside control limits.

Approved By: Greg Jordan

jas25

000097

DATA VALIDATION

CASE: 28909 SITE: Background ANALYSIS: SVOC

LAB NOTES: (1) -001 needed dilution

(2) method blank contamination

(3) MS/MSD from 29017-004

HOLDING TIMES: ANAL 3/20 - EXT 2/28 - samp 2/26 - OK

NUMBER OF SAMPLES: Soil 8 Water 1

CALIBRATION

Initial: OK

Continuing: %D Benzoic Acid: 99.9; 4-Nitrophenol 28.2; Hexachlorocyclopentadiene 36.8; 2,4-Dinitrophenol 27.5; Benzo[ghi]perylene 51.8 + attached page

4,6-Dinitro-2-methylphenol 30.7 + 44.4) 1,2-Diphenylhydrazine 29.2

COEFFICIENT: NA

BLANKS

Method: Soil - BEHP-61 Water - N-nitrosodiphenylamine - give .010 as B

* Field: no conc. Action: Remove B from soil w/ adjusted conc over 610

FIELD DUPLICATES: 007 + 008 not too similar -007 has 5 hits 008 = 1 (less than ½ of 007 hit)

SURROGATES:

MS/MSD:

INTERNAL STANDARDS: ok TUNING: OK

OTHER:

SUMMARY:

7B

SEMIVOLATILE CONTINUING CALIBRATION CHECK

Lab Name: CH2M HILL/LRD Contract: S28909

Lab Code: _____ Case No.: S28909 SAS No.: _____ SDG No.: GC-MS

Instrument ID: 4600 Calibration date: 03/22/91 Time: 1503

Lab File ID: 91M1BN1765 Init. Calib. Date(s): 03/04/91 03/05/91

Min RRF50 for SPCC(#) = 0.050 Max %D for CCC(*) = 25.0%

| COMPOUND | | $\overline{RRF}$ | RRF50 | %D | |
|---|---|---|---|---|---|
| Phenol | * | 0.804 | 0.894 | -11.2 | * |
| bis(2-Chloroethyl)Ether | | 0.705 | 0.815 | -15.6 | |
| 2-Chlorophenol | | 0.674 | 0.698 | -3.6 | |
| 1,3-Dichlorobenzene | | 0.779 | 0.789 | -1.3 | |
| 1,4-Dichlorobenzene | * | 0.788 | 0.827 | -4.9 | * |
| Benzyl Alcohol | | 0.372 | 0.467 | -25.5 | |
| 1,2-Dichlorobenzene | | 0.735 | 0.761 | -3.5 | |
| 2-Methylphenol | | 0.547 | 0.587 | -7.3 | |
| bis(2-Chloroisopropyl)Ether | | 1.029 | 1.354 | -31.6 | |
| 4-Methylphenol | | 0.621 | 0.650 | -4.7 | |
| N-Nitroso-di-n-propylamine | # | 0.431 | 0.551 | -27.8 | # |
| Hexachloroethane | | 0.307 | 0.289 | 5.9 | |
| Nitrobenzene | | 0.372 | 0.391 | -5.1 | |
| Isophorone | | 0.728 | 0.788 | -8.2 | |
| 2-Nitrophenol | * | 0.238 | 0.211 | 11.3 | * |
| 2,4-Dimethylphenol | | 0.320 | 0.295 | 7.8 | |
| Benzoic Acid | | 0.067 | 0.050 | 25.4 | |
| bis(2-Chloroethoxy)Methane | | 0.507 | 0.546 | -7.7 | |
| 2,4-Dichlorophenol | * | 0.357 | 0.315 | 11.8 | * |
| 1,2,4-Trichlorobenzene | | 0.392 | 0.349 | 11.0 | |
| Naphthalene | | 1.013 | 0.970 | 4.2 | |
| 4-Chloroaniline | | 0.447 | 0.469 | -4.9 | |
| Hexachlorobutadiene | * | 0.208 | 0.181 | 13.0 | * |
| 4-Chloro-3-methylphenol | * | 0.321 | 0.308 | 4.0 | * |
| 2-Methylnaphthalene | | 0.687 | 0.622 | 9.5 | |
| Hexachlorocyclopentadiene | # | 0.383 | 0.408 | -6.5 | # |
| 2,4,6-Trichlorophenol | * | 0.432 | 0.401 | 7.2 | * |
| 2,4,5-Trichlorophenol | | 0.396 | 0.456 | -15.2 | |
| 2-Chloronaphthalene | | 1.113 | 1.150 | -3.3 | |
| 2-Nitroaniline | | 0.352 | 0.414 | -17.6 | |
| Dimethyl Phthalate | | 1.206 | 1.200 | 0.5 | |
| Acenaphthylene | | 1.666 | 1.792 | -7.6 | |
| 2,6-Dinitrotoluene | | 0.329 | 0.316 | 4.0 | |
| 3-Nitroaniline | | 0.329 | 0.350 | -6.4 | |
| Acenaphthene | * | 0.946 | 1.034 | -9.3 | * |
| 2,4-Dinitrophenol | # | 0.189 | 0.134 | 29.1 | # |
| 4-Nitrophenol | # | 0.071 | 0.083 | -16.9 | # |

000183

7A

# VOLATILE CONTINUING CALIBRATION CHECK

Lab Name: CH2M HILL/LRD Contract: V28909

Lab Code: _____ Case No.: V28909 SAS No.: _____ SDG No.: GC-MS

Instrument ID: 5100 Calibration date: 03/01/91 Time: 0911

Lab File ID: 91M2V01683 Init. Calib. Date(s): 02/22/91 02/22/91

Matrix:(soil/water) WATER Level:(low/med) LOW Column:(pack/cap) _____

Min RRF50 for SPCC(#) = 0.300 (0.250 for Bromoform) Max %D for CCC(*) = 25.0%

| COMPOUND | | $\overline{RRF}$ | RRF50 | %D | |
|---|---|---|---|---|---|
| Chloromethane | # | 1.579 | 1.347 | 14.7 | # |
| Bromomethane | | 1.262 | 1.293 | -2.5 | |
| Vinyl Chloride | * | 1.337 | 1.315 | 1.6 | * |
| Chloroethane | | 0.604 | 0.593 | 1.8 | |
| Methylene Chloride | | 1.741 | 2.014 | -15.7 | |
| Acetone | | 1.326 | 1.542 | -16.3 | |
| Carbon Disulfide | | 3.504 | 3.140 | 10.4 | |
| 1,1-Dichloroethene | * | 1.026 | 1.029 | -0.3 | * |
| 1,1-Dichloroethane | # | 2.780 | 3.045 | -9.5 | # |
| 1,2-Dichloroethene (total) | | 1.587 | 1.897 | -19.5 | |
| Chloroform | * | 3.063 | 3.808 | -24.3 | * |
| 1,2-Dichloroethane | | 2.296 | 3.107 | -35.3 | |
| 2-Butanone (MEK) | | 0.093 | 0.113 | -21.5 | |
| 1,1,1-Trichloroethane | | 0.398 | 0.419 | -5.3 | |
| Carbon Tetrachloride | | 0.487 | 0.566 | -16.2 | |
| Vinyl Acetate | | 0.846 | 0.912 | -7.8 | |
| Bromodichloromethane | | 0.682 | 0.906 | -32.8 | |
| 1,2-Dichloropropane | * | 0.428 | 0.512 | -19.6 | * |
| cis-1,3-Dichloropropene | | 0.533 | 0.660 | -23.8 | |
| Trichloroethene | | 0.387 | 0.496 | -28.2 | |
| Dibromochloromethane | | 0.593 | 0.910 | -53.5 | |
| 1,1,2-Trichloroethane | | 0.351 | 0.527 | -50.1 | |
| Benzene | | 0.928 | 1.089 | -17.4 | |
| trans-1,3-Dichloropropene | | 0.527 | 0.701 | -33.0 | |
| Bromoform | # | 0.555 | 0.894 | -61.1 | # |
| 4-Methyl-2-Pentanone | | 1.225 | 1.631 | -33.1 | |
| 2-Hexanone | | 1.086 | 1.501 | -38.2 | |
| Tetrachloroethene | | 0.397 | 0.517 | -30.2 | |
| 1,1,2,2-Tetrachloroethane | # | 0.943 | 1.324 | -40.4 | # |
| Toluene | * | 0.732 | 0.856 | -16.9 | * |
| Chlorobenzene | # | 0.916 | 1.172 | -28.0 | # |
| Ethylbenzene | * | 0.424 | 0.530 | -25.0 | * |
| Styrene | | 0.835 | 1.103 | -32.1 | |
| Xylenes (total) | | 0.489 | 0.635 | -29.9 | |
| Toluene-d8 - SS | | 0.563 | 0.523 | 7.1 | |
| 1,4-Bromofluorobenzene - SS | | 0.401 | 0.393 | 2.0 | |
| 1,2-Dichloroethane-d4 - SS | | 1.026 | 1.092 | -6.4 | |

DATA VALIDATION

CASE: 28909 SITE: BKGD ANALYSIS: INORG

LAB NOTES: -001 diluted Pb in GFAA 1:10 to get reading
Lab reported Pb by ICP analysis for sample 1

HOLDING TIMES: No analysis time listed. (I used prep date on the spread sheet)

NUMBER OF SAMPLES: Soil 7 Water 1

CALIBRATION
Initial: ok

Continuing: ok

correlation
COEFFICIENT: Not provided ICS - ok

BLANKS
Aqueous - Sb - 8.2 Ba 2.6 Pb 1.0 Zn 4.2
Method: Soil Cu 11.1 Ag 1.4

* Field: Cu 2.4 Zn 5.0; Flag all adjusted concentrations below 25 Zn and Cu 12

FIELD DUPLICATES: -007 + -008 - good match

SURROGATES: —

MS/MSD: Pre-spike out because conc. too low for Hg + Se - no action

INTERNAL STANDARDS: NA TUNING: NA

OTHER: LCS - ok

→ SUMMARY: The CRDL for lead of 3 and for As of 10 could not be met when analysis was by ICP for both (IDL of 13 for As and 18 for Pb)

DATA VALIDATION

CASE: 28922 SITE: BKGD ANALYSIS: VOC

LAB NOTES: MeCl + Acetone in blank

MS/MSD with 29017-004

HOLDING TIMES:

NUMBER OF SAMPLES: Soil 3 Water 1 ERB - No trip blank *

CALIBRATION

Initial: MEK $\overline{RRF}$ of 0.090 - ok for Hazwrap (limit = 0.05)

Continuing: ok

COEFFICIENT: —

BLANKS

Method: Not done for water ; soil = MeCl 4 Acetone = 2

Field: " 4 " 25

FIELD DUPLICATES: None indicated

SURROGATES: ok

MS/MSD: ok

INTERNAL STANDARDS: ok TUNING: ok

OTHER:

SUMMARY: There should have been a method blank for the water sample - I can't find any done on that date

The soil blank associated with this case was dated a day earlier - that may be a midnight analysis

Nothing besides blank contamination found above CRDL

# DATA VALIDATION

CASE: 28922 SITE: BKGD ANALYSIS: SVOA

LAB NOTES: Blank contam. acceptable (!)

MS/MSD with 29017.004

HOLDING TIMES: W. 3/4 - 2/27 ok Soil 2/28 - 2/27 ok

NUMBER OF SAMPLES: Soil 3 Water 1

CALIBRATION

Initial: OK

Continuing: RRF for Benzoic Acid: 0.024 (%D = ≥ 26.9) (+0.049) %D BCIE 36.9

HxCCPDiene 36.8 %D = 64.2 Nitroaniline 36.6

%D dinitrophenol 27.5 Benzo (ghi) p. 57.6

COEFFICIENT:

BLANKS

W - nothing Soil. BEHP - 61 BJ and dibutyl phthalate 43 BJ + some TICs

Method: Neither blank listed was analyzed w/ batch but they were extracted w/ batch

Field:

FIELD DUPLICATES: none

SURROGATES: PHL-d5 106 out of 10-94 - only 1 so no action

MS/MSD: ok

INTERNAL STANDARDS: ok TUNING: ok

OTHER:

SUMMARY: No hits associated w/ CCalib., ∴ no flags

# DATA VALIDATION

CASE: 28922 (DAN-2) SITE: BKGD ANALYSIS: INORG

LAB NOTES: All blanks <CRDL ; Se spike, Pb spike OUT but acceptable
RPDs of As + Zn OUT ; LCS varied for furnace but acceptable
MS/MSD in 28909

HOLDING TIMES:

NUMBER OF SAMPLES: Soil 3 Water 1

CALIBRATION
Initial: ok

Continuing: ok LCS : ok

COEFFICIENT: ICS - ok

BLANKS
Method: Ag = Sb 8.2 ; Ba 2.6 ; Pb 1.0 ; Zn 4.2
Soil = Cu 11.1 ; Ag 1.4

Field: Ba 3.7 ; Cu 72.1 Pb 21.9 Zn 50.1

FIELD DUPLICATES: No field dups

SURROGATES:

MS/MSD: ok

INTERNAL STANDARDS: — TUNING: —

OTHER: As analyzed by ICP - no explanation why in lab notes
since there were concentrations reported for all samples, it probably doesn't matter

SUMMARY:

# DATA VALIDATION

CASE: 28934 SITE: 2 + 1 ANALYSIS: VOA

LAB NOTES: (1) the 1st analysis for med level had invalid IC – the re-analysis was past holding times (2) MeCl + acetone in blanks (3) MS/MSD with 29017

HOLDING TIMES: 3/13 analysis – 2/28 sampled – 13 days for low
1st dilution – 14 days from extraction; 2nd dil – 18 days from extraction

NUMBER OF SAMPLES: Soil 3 Water –

CALIBRATION
Initial: ~~Chloromethane 35.6% RSD~~ ok

Continuing: 1,1,2-TCA 30.8% D chloromethane 27.6% D, ~~28.6% D~~ not used
MeCl – ~~99.9% D~~ not used

COEFFICIENT:

BLANKS
Method: MeCl 4, 10 Acetone 6, 5

Field: none

FIELD DUPLICATES: none

SURROGATES: control charts show %R within range – ok

MS/MSD:

INTERNAL STANDARDS: ok TUNING: ok

OTHER:

SUMMARY: I used the concentration for the re-analysis that had a good calibration but was past holding times (24,000 ug/kg) rather than the invalid IC within acceptable " " (29,000 ug/kg). All other hits recorded from original analysis.

# DATA VALIDATION

CASE: 28934 SITE: 2 ANALYSIS: SVOC

LAB NOTES: blank contam. MS/MSD w 29017

HOLDING TIMES: 3/4 extract - 2/28 sampling = 4 days

NUMBER OF SAMPLES: Soil 3 Water -

CALIBRATION
Initial: ok

Continuing: Benzoic Acid 0.049 RRF50 + 26.9 %D

COEFFICIENT: -

BLANKS
Method: N-nitrosodiphenylamine (35) + BEHP (34)

Field: none

FIELD DUPLICATES: none

SURROGATES: control charts in

MS/MSD:

INTERNAL STANDARDS: ok TUNING: ok

OTHER:

SUMMARY:

# DATA VALIDATION

CASE: 28934 SITE: 2 ANALYSIS: INORG

LAB NOTES: ① blank contam, ② Se pd's out, Pb preds. out, dups out
③ LCS

HOLDING TIMES: Hg 3/12 prep - 2/28 samp - 12 days

NUMBER OF SAMPLES: Soil 1 Water

CALIBRATION
Initial: ok

Continuing: ok

COEFFICIENT: no furnace data supplied

BLANKS
Method: Ag 1.4 Cu 11.1

Field: none

FIELD DUPLICATES: none ; lab dup form not included

SURROGATES:

MS/MSD:

INTERNAL STANDARDS: TUNING:

OTHER: ICS - ok
LCS - ok

* SUMMARY: I couldn't find post-digestion results for furnace metals

* This lab does not give analysis dates for metals - I used prep dates

Forms missing - 5A + 5B (pre + post d. spike)

* 6 (duplicates)

No control charts

# DATA VALIDATION

CASE: 28934 SITE: 2 ANALYSIS: BTEX

LAB NOTES: (1) Med level analysis for 8, 9, 11, 12 due to high PAH background
(2) 5x dilution for -11 + 12 due to interference (3) $r^2 < 0.995$ for confirmation only
(4) surrogate low for -11

HOLDING TIMES: analy. 3/07 - 2/28 = 7 days low + 3/11 extract - 2/28 = 11 days for medium ok

NUMBER OF SAMPLES: Soil 10 Water 2 = 1 ERB + 1 TRIP

CALIBRATION
Initial: ok for BTEX compounds

Continuing: ok for " "

COEFFICIENT: original - ok confirmation - < .995

BLANKS
Method: no hits

Field: no hits

FIELD DUPLICATES: none

SURROGATES: 69%R for -11 but this sample showed highest concentrations - "J"
55%R for -10 - not mentioned in lab notes - 1 small hit - UJ for non-hits

MS/MSD: ok

INTERNAL STANDARDS: — TUNING: —

OTHER: control chart - within range

SUMMARY: low surrogate R for 2 samples

1F

# SEMIVOLATILE ORGANICS ANALYSIS DATA SHEET
## TENTATIVELY IDENTIFIED COMPOUNDS

EPA SAMPLE NO.

02B-S-12-14

Lab Name: CH2M HILL/LRD Contract: S28934

Lab Code: _____ Case No.: S28934 SAS No.: _____ SDG No.: GC-MS

Matrix: (soil/water) SOIL Lab Sample ID: 28934002

Sample wt/vol: _____ (g/mL) G Lab File ID: 91M1BN1784

Level: (low/med) LOW Date Received: 03/01/91

% Moisture: not dec. 21 dec. _____ Date Extracted: 03/04/91

Extraction: (SepF/Cont/Sonc) SONC Date Analyzed: 03/23/91

GPC Cleanup: (Y/N) N pH: _____ Dilution Factor: 1

Number TICs found: 11

CONCENTRATION UNITS:
(ug/L or ug/Kg) UG/KG

| CAS NUMBER | COMPOUND NAME | RT | EST. CONC. | Q |
|---|---|---|---|---|
| 1. | UNKNOWN | 6.87 | 700 | J |
| 2. 556-67-2 | CYCLOTETRASILOXANE, OCTAMETH | 9.85 | 190 | BJ |
| 3. 57-10-3 | HEXADECANOIC ACID | 23.07 | 590 | J |
| 4. | UNKNOWN | 23.19 | 220 | J |
| 5. | UNKNOWN | 24.39 | 270 | J |
| 6. 238-84-6 | 11H-BENZO[A]FLUORENE | 26.31 | 220 | J |
| 7. 123-79-5 | HEXANEDIOIC ACID, DIOCTYL ES | 27.59 | 9600 | J |
| 8. 27208-37-3 | CYCLOPENTA[CD]PYRENE | 28.29 | 210 | J |
| 9. 205-82-3 | BENZO[J]FLUORANTHENE | 33.39 | 510 | J |
| 10. | UNKNOWN | 40.16 | 190 | J |
| 11. | UNKNOWN | 40.56 | 170 | J |

1F

SEMIVOLATILE ORGANICS ANALYSIS DATA SHEET
TENTATIVELY IDENTIFIED COMPOUNDS

EPA SAMPLE NO.

02B-S-18-20

Lab Name: CH2M HILL/LRD Contract: S28934

Lab Code: _____ Case No.: S28934 SAS No.: _____ SDG No.: GC-MS

Matrix: (soil/water) SOIL Lab Sample ID: 28934003

Sample wt/vol: _____ (g/mL) G Lab File ID: 91M1BN1785

Level: (low/med) LOW Date Received: 03/01/91

% Moisture: not dec. 23 dec. _____ Date Extracted: 03/04/91

Extraction: (SepF/Cont/Sonc) SONC Date Analyzed: 03/23/91

GPC Cleanup: (Y/N) N pH: _____ Dilution Factor: 1

Number TICs found: 9

CONCENTRATION UNITS:
(ug/L or ug/Kg) UG/KG

| CAS NUMBER | COMPOUND NAME | RT | EST. CONC. | Q |
|---|---|---|---|---|
| 1. | UNKNOWN | 5.23 | 250 | J |
| 2. | UNKNOWN | 5.97 | 190 | J |
| 3. | UNKNOWN | 6.88 | 1000 | J |
| 4. 556-67-2 | CYCLOTETRASILOXANE, OCTAMETH | 9.84 | 280 | BJ |
| 5. 4032-93-3 | HEPTANE, 2,3,6-TRIMETHYL- | 10.54 | 190 | J |
| 6. 872-50-4 | 2-PYRROLIDINONE, 1-METHYL- | 10.84 | 180 | J |
| 7. 57-10-3 | HEXADECANOIC ACID | 23.07 | 470 | J |
| 8. | UNKNOWN | 24.39 | 520 | J |
| 9. 103-23-1 | HEXANEDIOIC ACID, BIS(2-ETHY | 27.57 | 3100 | J |

000145

1F

SEMIVOLATILE ORGANICS ANALYSIS DATA SHEET
TENTATIVELY IDENTIFIED COMPOUNDS

EPA SAMPLE NO.

02B-S-0-2

Lab Name: CH2M HILL/LRD Contract: S28934

Lab Code: _____ Case No.: S28934 SAS No.: _____ SDG No.: GC-MS

Matrix: (soil/water) SOIL Lab Sample ID: 28934001

Sample wt/vol: _____ (g/mL) G Lab File ID: 91M1BN1783

Level: (low/med) LOW Date Received: 03/01/91

% Moisture: not dec. 22 dec. _____ Date Extracted: 03/04/91

Extraction: (SepF/Cont/Sonc) SONC Date Analyzed: 03/23/91

GPC Cleanup: (Y/N) N pH: _____ Dilution Factor: 1

Number TICs found: 8

CONCENTRATION UNITS:
(ug/L or ug/Kg) UG/KG

| CAS NUMBER | COMPOUND NAME | RT | EST. CONC. | Q |
|---|---|---|---|---|
| 1. 147-85-3 | L-PROLINE | 5.17 | 260 | BJ |
| 2. | UNKNOWN | 5.90 | 200 | J |
| 3. | UNKNOWN | 6.83 | 1200 | J |
| 4. 79-34-5 | ETHANE, 1,1,2,2-TETRACHLORO- | 8.34 | 200 | J |
| 5. 4032-93-3 | HEPTANE, 2,3,6-TRIMETHYL- | 10.52 | 230 | J |
| 6. 17851-53-5 | 1,2-BENZENEDICARBOXYLIC ACID | 22.25 | 210 | J |
| 7. 57-10-3 | HEXADECANOIC ACID | 23.07 | 330 | J |
| 8. 103-23-1 | HEXANEDIOIC ACID, BIS(2-ETHY | 27.54 | 560 | J |



FORM I SV-TIC 1/87 Rev.

BC

DATA VALIDATION

CASE: 28934 SITE: 2 ANALYSIS: INORG

LAB NOTES: %R of Se, Pb out %D of As, Zn out LCS variance

ms/msd w/ 28909-001

HOLDING TIMES: ~~Hg~~ Prep 3/12 — Sampling 2/26 = 14 days

NUMBER OF SAMPLES: Soil 1 Water —

CALIBRATION

Initial: ok

Continuing: ok

COEFFICIENT: can't find

BLANKS

Method: Cu · 11.1 Ag 1.4 Flag Cu with B; no Ag present

Field: None

FIELD DUPLICATES: None

SURROGATES: —

MS/MSD: No problem

INTERNAL STANDARDS: — TUNING: —

OTHER:

SUMMARY: No analysis ~~times~~ dates recorded - I used prep time

DATA VALIDATION

CASE: 28972 SITE: 1 ANALYSIS: PAH

LAB NOTES: Sample had to be diluted 1:2
co-elution of indeno(1,2,3-cd)pyrene and dibenzo (a,h) anthracene

HOLDING TIMES: 3/06 extract - 3/4 sampling = 2 days

NUMBER OF SAMPLES: Soil _____ Water 1

CALIBRATION
Initial: %RSD for benzo(g,h,i)perylene - 30.18; confirm = 7.64

Continuing: %D for benzo(g,h,i)perylene - 40.63

COEFFICIENT: not found

BLANKS
Method: no hits

Field: none

FIELD DUPLICATES: none

SURROGATES: ok

MS/MSD: not requested

INTERNAL STANDARDS: — TUNING: —

OTHER:

SUMMARY:

DATA VALIDATION

CASE: 28972 SITE: / ANALYSIS: BTEX

LAB NOTES: orig. analysis out of range. - reanalysis at 5x dilution

diluted sample 3/18 - 3/4 = 14 days

HOLDING TIMES: exceeded for confirmation; orig analysis 3/14 - 3/4 = 10 days

NUMBER OF SAMPLES: Soil _____ Water / PSBW1

CALIBRATION

Initial: ok

Continuing: ok for target compounds (out for styrene, etc.)

COEFFICIENT: _____

BLANKS

Method: no detects

Field: _____

FIELD DUPLICATES: _____

SURROGATES: %R within control chart range

MS/MSD: lab note that acceptance criteria were met but no data included (or requested)

INTERNAL STANDARDS: _____ TUNING: _____

OTHER: _____

SUMMARY: _____

# DATA VALIDATION

CASE: 28973 SITE: QC ANALYSIS: VOA

LAB NOTES: Travel Blank had to be diluted
MeCl + Acetone found in method blank
MS/MSD w/ 29017-015

HOLDING TIMES: 3/11 - 3/04 - OK

NUMBER OF SAMPLES: Soil – Water 2
1 FB; 1 Trip Bl

CALIBRATION
Initial: RRF ok %RSD ok

Continuing: Chloromethane - 31.6%D - not found in sample - no action taken

~~Correlation~~
COEFFICIENT: ~~not found~~ NA

BLANKS
Method: MeCl 6 and Acetone 12

Field: MeCl Acetone

FIELD DUPLICATES: none

SURROGATES: ok

MS/MSD:

INTERNAL STANDARDS: OK TUNING: ok

OTHER:

SUMMARY:

DATA VALIDATION

CASE: 28973 SITE: QC ANALYSIS: SVOC

LAB NOTES: some blank contam. but within criteria

MS/MSD with 29017-015

HOLDING TIMES: 3/04 ext - 3/04 - ok

NUMBER OF SAMPLES: Soil _____ Water 1 FB

CALIBRATION

Initial: $\overline{RRF}$ ok %RSD - ok

Continuing: Benzoic Acid - -47.8 %D (3/19) ; Benzo[ghi]perylene -43.8 %D (3/27)

Hexachlorobutadiene cyclopentadiene 29 %D

~~COEFFICIENT~~:

BLANKS

Method: both compounds found in FB were found in method blank

Field: the 1 sample is a field blank

FIELD DUPLICATES: none indicated

SURROGATES: ok

MS/MSD:

INTERNAL STANDARDS: ok TUNING: ok

OTHER:

SUMMARY:

DATA VALIDATION

CASE: 28973 SITE: QC ANALYSIS: INORG

LAB NOTES: DUP + SPIKE w/ 29017.015 for all but Hg
28909.010 for Hg

HOLDING TIMES: No date of analysis given - ok using prepdate

NUMBER OF SAMPLES: Soil _____ Water 1

CALIBRATION
Initial: ok

Continuing: ok

Correlation
COEFFICIENT: not found

BLANKS
Method: 5.9B Zn

Field: This one sample is a field blank - has a copper hit of 51.2

FIELD DUPLICATES: None

SURROGATES: —

MS/MSD: _____

INTERNAL STANDARDS: — ~~TUNING:~~ LCS: ok

OTHER: _____

SUMMARY: _____

DATA VALIDATION

CASE: 28998 SITE: 1 ANALYSIS: BTEX

LAB NOTES: Holding times exceeded for 2 samples and the ms/msD run. -009 and -011 were diluted because of matrix interference additional information attached

HOLDING TIMES: Analysis 3/15 - 20 - Sampling date 3/5 = 15 days for -002 and -010 and MS/MSD

NUMBER OF SAMPLES: Soil 16 Water ↳ 2 = 1 ERB + 1 TRIP

CALIBRATION
Initial: ok

Continuing: ok

Correlation COEFFICIENT: - half are low - all associated concentrations should be estimated

BLANKS
Method: nothing found

Field: no detects

FIELD DUPLICATES: possible -002 + -003 ; J hit in one - ND in other

SURROGATES: low 35%R + 52%R high 188%R + 206%R

MS/MSD:

INTERNAL STANDARDS: — TUNING: —

OTHER: They re-ran the high surrogates with similar results + didn't re-run the low surrogates because there would still be an interference problem.

SUMMARY: Flag non-detects UJ because of low correlation coefficients and low surrogate recoveries.

DATA VALIDATION

CASE: 29017 SITE: 2 ANALYSIS: VOA

LAB NOTES: -006, -011, -016 were diluted (16 is a trip blank)

MeCl + Acetone + TCE in method blank

MS/MSD: TCE out, diluted sample run for spike but not for duplicate

HOLDING TIMES: Analysis 3/20 - Sampling 3/6 - ok

NUMBER OF SAMPLES: Soil 14 Water 2

All init. for soils, given are all for medium level - none given for low level soil

CALIBRATIONS

Initial: Chloromethane (med soil) 41.8% RSD MeCl 30.7

Acetone 31.6% MEK 0.041 RRF

Continuing: med soil Chloromethane 33.5%D; MEK 0.038 RRFSD

$CS_2$ - 30.4%D

~~COEFFICIENT:~~ Low soil - see attached

BLANKS

Method: see attached

Field: ERB: Acetone 36; MeCl 4; TCE 1; TRAVEL: $CS_2$ 1800; MeCl 70

FIELD DUPLICATES: -013 + -014; -003 + -004 - good to fairly good match

SURROGATES: ok

MS/MSD: ok - 1 out but ok

INTERNAL STANDARDS: ok TUNING: ok

OTHER: There were a number of TICs in both medium + low soil samples - examples are attached

SUMMARY:

DATA VALIDATION

CASE: 29017 SITE: 2 ANALYSIS: SVOC

LAB NOTES: -1 was diluted blank contam was acceptable
%R Pd5 " "
MS/MSD not within limits

HOLDING TIMES:

NUMBER OF SAMPLES: Soil 14 Water 1

CALIBRATION
Initial: ok

Continuing: %D Benzoic Acid 3/15 -99.9, 3/26 -91.8, 3/26 82.5 Benzyl 3/26 32.8
Hexachlorocyclopentadiene 3/26 53.7, 3/26 39.6 2,4-dinitrophenol 33.7

~~COEFFICIENT~~: 3-Nitroaniline 3/26 40.5 4-Nitroaniline 3/26 47.1 [no Hits, no flags]

BLANKS
Method: BEHP · 66 + 73 in soil blank - [B removed from all over 800]

Field: BEHP · 5

FIELD DUPLICATES: good matches

→ SURROGATES: Phenol-d5 - high %R in 4 of 6 samples - I did not flag because it was all for a single surrogate, but you may wish to.

MS/MSD: Both %Rs out for 2 compounds - LCS ok - I took no action

INTERNAL STANDARDS: ok TUNING: ok.

OTHER:

SUMMARY: Lots of TICs - some examples attached

# CH2M HILL TELEPHONE CONVERSATION RECORD

CALL TO _____ PHONE NO. _____

DATE _____

CALL FROM _____ TIME _____ ☐ AM ☐ PM

MESSAGE TAKEN BY _____ PROJECT NO. _____

SUBJECT _____

| Lab Sample | Sample #s | N-nitrosodip. | di-n-butyl-p | BEHP |
|---|---|---|---|---|
| WB1 | -15, M15, D15 | 3 | 2 | 4 |
| W 2 | | – | – | 4 |
| S1 | -1 — -9 | – | - | 66 |
| S2 | -10 — -14, + 14+4 MS/MSD | | | 73 |

FORM 4

1F

SEMIVOLATILE ORGANICS ANALYSIS DATA SHEET
TENTATIVELY IDENTIFIED COMPOUNDS

EPA SAMPLE NO.

05BS-8-10

Lab Name: CH2M HILL/LRD Contract: S29017

Lab Code: _____ Case No.: S29017 SAS No.: _____ SDG No.: GC-MS

Matrix: (soil/water) SOIL Lab Sample ID: 29017009

Sample wt/vol: _____ (g/mL) G Lab File ID: 91M1BN1859

Level: (low/med) LOW Date Received: 03/07/91

% Moisture: not dec. 21 dec. _____ Date Extracted: 03/11/91

Extraction: (SepF/Cont/Sonc) SONC Date Analyzed: 03/29/91

GPC Cleanup: (Y/N) N pH: _____ Dilution Factor: 1

Number TICs found: 20

CONCENTRATION UNITS:
(ug/L or ug/Kg) UG/KG

| CAS NUMBER | COMPOUND NAME | RT | EST. CONC. | Q |
|---|---|---|---|---|
| 1. | UNKNOWN | 6.90 | 59000 | J |
| 2. 095-47-6 | BENZENE, 1,2-DIMETHYL- | 7.33 | 3400 | J |
| 3. 13475-81-5 | HEXANE, 2,2,3,3-TETRAMETHYL- | 7.92 | 6000 | J |
| 4. 62016-34-6 | OCTANE, 2,3,7-TRIMETHYL- | 8.59 | 7600 | J |
| 5. 52896-87-4 | HEPTANE, 4-(1-METHYLETHYL)- | 8.74 | 3700 | J |
| 6. | UNKNOWN | 9.00 | 3700 | J |
| 7. 620-14-4 | BENZENE, 1-ETHYL-3-METHYL- | 9.17 | 12000 | J |
| 8. | UNKNOWN | 9.29 | 5000 | J |
| 9. 124-18-5 | DECANE | 9.84 | 20000 | J |
| 10. 17302-28-2 | NONANE, 2,6-DIMETHYL- | 10.25 | 5300 | J |
| 11. 108-67-8 | BENZENE, 1,3,5-TRIMETHYL- | 10.34 | 4200 | J |
| 12. | UNKNOWN | 10.47 | 6200 | J |
| 13. 1074-55-1 | BENZENE, 1-METHYL-4-PROPYL- | 10.82 | 4300 | J |
| 14. | UNKNOWN | 10.95 | 8800 | J |
| 15. 62016-37-9 | OCTANE, 2,4,6-TRIMETHYL- | 11.57 | 10000 | J |
| 16. 767-99-7 | BENZENE, (1-METHYL-1-PROPENY | 12.55 | 2900 | J |
| 17. 30571-71-2 | DECANE, 3-BROMO- | 12.74 | 2000 | J |
| 18. 2801-84-5 | DECANE, 2,4-DIMETHYL- | 14.74 | 4300 | J |
| 19. 31295-56-4 | DODECANE, 2,6,11-TRIMETHYL- | 16.15 | 2900 | J |
| 20. 74645-98-0 | DODECANE, 2,7,10-TRIMETHYL- | 17.52 | 1600 | J |

1F

SEMIVOLATILE ORGANICS ANALYSIS DATA SHEET
TENTATIVELY IDENTIFIED COMPOUNDS

EPA SAMPLE NO.

04BS-14-16D

Lab Name: CH2M HILL/LRD Contract: S29017

Lab Code: _____ Case No.: S29017 SAS No.: _____ SDG No.: GC-MS

Matrix: (soil/water) SOIL Lab Sample ID: 29017004

Sample wt/vol: _____ (g/mL) G Lab File ID: 91M1BN1854

Level: (low/med) LOW Date Received: 03/07/91

% Moisture: not dec. 21 dec. ____ Date Extracted: 03/11/91

Extraction: (SepF/Cont/Sonc) SONC Date Analyzed: 03/29/91

GPC Cleanup: (Y/N) N pH: ____ Dilution Factor: 1

Number TICs found: 20

CONCENTRATION UNITS:
(ug/L or ug/Kg) UG/KG

| CAS NUMBER | COMPOUND NAME | RT | EST. CONC. | Q |
|---|---|---|---|---|
| 1. 075-91-2 | HYDROPEROXIDE, 1,1-DIMETHYLE | 6.88 | 56000 | BJ |
| 2. 095-47-6 | BENZENE, 1,2-DIMETHYL- | 7.30 | 1100 | J |
| 3. 13475-81-5 | HEXANE, 2,2,3,3-TETRAMETHYL- | 7.90 | 1200 | J |
| 4. 5911-04-6 | NONANE, 3-METHYL- | 8.57 | 1900 | J |
| 5. 620-14-4 | BENZENE, 1-ETHYL-3-METHYL- | 9.15 | 3100 | J |
| 6. 526-73-8 | BENZENE, 1,2,3-TRIMETHYL- | 9.27 | 1400 | J |
| 7. 124-18-5 | DECANE | 9.80 | 6100 | J |
| 8. 17302-28-2 | NONANE, 2,6-DIMETHYL- | 10.22 | 2100 | J |
| 9. | UNKNOWN | 10.32 | 1700 | J |
| 10. | UNKNOWN | 10.44 | 2700 | J |
| 11. 1074-55-1 | BENZENE, 1-METHYL-4-PROPYL- | 10.80 | 2400 | J |
| 12. | UNKNOWN | 10.94 | 3200 | J |
| 13. 13151-34-3 | DECANE, 3-METHYL- | 11.07 | 1300 | J |
| 14. 17301-32-5 | UNDECANE, 4,7-DIMETHYL- | 11.57 | 5200 | J |
| 15. | UNKNOWN | 12.55 | 1100 | J |
| 16. 62016-34-6 | OCTANE, 2,3,7-TRIMETHYL- | 14.30 | 860 | J |
| 17. 17301-30-3 | UNDECANE, 3,8-DIMETHYL- | 14.72 | 1800 | J |
| 18. 7289-40-9 | ETHER, HEPTYL HEXYL | 16.14 | 900 | J |
| 19. 057-10-3 | HEXADECANOIC ACID | 22.92 | 1200 | BJ |
| 20. 103-23-1 | HEXANEDIOIC ACID, BIS(2-ETHY | 27.42 | 990 | J |



BG

1F

SEMIVOLATILE ORGANICS ANALYSIS DATA SHEET
TENTATIVELY IDENTIFIED COMPOUNDS

EPA SAMPLE NO.

04BS-14-16

Lab Name: CH2M HILL/LRD Contract: S29017

Lab Code: _____ Case No.: S29017 SAS No.: _____ SDG No.: GC-MS

Matrix: (soil/water) SOIL Lab Sample ID: 29017003

Sample wt/vol: _____ (g/mL) G Lab File ID: 91M1BN1853

Level: (low/med) LOW Date Received: 03/07/91

% Moisture: not dec. 23 dec. _____ Date Extracted: 03/11/91

Extraction: (SepF/Cont/Sonc) SONC Date Analyzed: 03/29/91

GPC Cleanup: (Y/N) N pH: _____ Dilution Factor: 1

Number TICs found: 20

CONCENTRATION UNITS:
(ug/L or ug/Kg) UG/KG

| CAS NUMBER | COMPOUND NAME | RT | EST. CONC. | Q |
|---|---|---|---|---|
| 1. 075-91-2 | HYDROPEROXIDE, 1,1-DIMETHYLE | 6.87 | 60000 | BJ |
| 2. 13475-81-5 | HEXANE, 2,2,3,3-TETRAMETHYL- | 7.88 | 1200 | J |
| 3. 5911-04-6 | NONANE, 3-METHYL- | 8.57 | 1700 | J |
| 4. | UNKNOWN | 9.14 | 2800 | J |
| 5. | UNKNOWN | 9.27 | 1200 | J |
| 6. 124-18-5 | DECANE | 9.82 | 5700 | J |
| 7. 17302-28-2 | NONANE, 2,6-DIMETHYL- | 10.22 | 1800 | J |
| 8. 095-63-6 | BENZENE, 1,2,4-TRIMETHYL- | 10.30 | 1300 | J |
| 9. 7058-01-7 | CYCLOHEXANE, (1-METHYLPROPYL | 10.45 | 1200 | J |
| 10. 17302-32-8 | NONANE, 3,7-DIMETHYL- | 10.52 | 1100 | J |
| 11. 6975-98-0 | DECANE, 2-METHYL- | 10.95 | 5000 | J |
| 12. 13151-34-3 | DECANE, 3-METHYL- | 11.07 | 1200 | J |
| 13. 933-98-2 | BENZENE, 1-ETHYL-2,3-DIMETHY | 11.25 | 1000 | J |
| 14. 62016-37-9 | OCTANE, 2,4,6-TRIMETHYL- | 11.57 | 5100 | J |
| 15. 4292-92-6 | CYCLOHEXANE, PENTYL- | 12.22 | 700 | J |
| 16. | UNKNOWN | 12.60 | 1200 | J |
| 17. 62016-34-6 | OCTANE, 2,3,7-TRIMETHYL- | 14.30 | 860 | J |
| 18. 62016-37-9 | OCTANE, 2,4,6-TRIMETHYL- | 14.70 | 1400 | J |
| 19. 62016-37-9 | OCTANE, 2,4,6-TRIMETHYL- | 16.14 | 880 | J |
| 20. 057-10-3 | HEXADECANOIC ACID | 22.92 | 1200 | BJ |



BG

1F

SEMIVOLATILE ORGANICS ANALYSIS DATA SHEET
TENTATIVELY IDENTIFIED COMPOUNDS

EPA SAMPLE NO.

04BS-6-8

Lab Name: CH2M HILL/LRD Contract: S29017

Lab Code: _____ Case No.: S29017 SAS No.: _____ SDG No.: GC-MS

Matrix: (soil/water) SOIL Lab Sample ID: 29017002

Sample wt/vol: _____ (g/mL) G Lab File ID: 91M1BN1852

Level: (low/med) LOW Date Received: 03/07/91

% Moisture: not dec. 20 dec. ____ Date Extracted: 03/11/91

Extraction: (SepF/Cont/Sonc) SONC Date Analyzed: 03/29/91

GPC Cleanup: (Y/N) N pH: ____ Dilution Factor: 1

Number TICs found: 20

CONCENTRATION UNITS:
(ug/L or ug/Kg) UG/KG

| CAS NUMBER | COMPOUND NAME | RT | EST. CONC. | Q |
|---|---|---|---|---|
| 1. 141-79-7 | 3-PENTEN-2-ONE, 4-METHYL- | 5.72 | 480 | BJ |
| 2. 108-21-4 | ACETIC ACID, 1-METHYLETHYL E | 6.22 | 370 | BJ |
| 3. 075-91-2 | HYDROPEROXIDE, 1,1-DIMETHYLE | 6.87 | 53000 | BJ |
| 4. | UNKNOWN | 8.25 | 550 | J |
| 5. 871-83-0 | NONANE, 2-METHYL- | 9.15 | 350 | J |
| 6. 124-18-5 | DECANE | 9.82 | 1000 | J |
| 7. 13475-78-0 | HEPTANE, 5-ETHYL-2-METHYL- | 10.22 | 360 | J |
| 8. 6975-98-0 | DECANE, 2-METHYL- | 10.95 | 930 | J |
| 9. 871-83-0 | NONANE, 2-METHYL- | 11.57 | 1200 | J |
| 10. | UNKNOWN | 11.94 | 290 | J |
| 11. 62183-55-5 | OCTANE, 3-ETHYL-2,7-DIMETHYL | 12.62 | 270 | J |
| 12. 62016-34-6 | OCTANE, 2,3,7-TRIMETHYL- | 14.32 | 340 | J |
| 13. 17301-30-3 | UNDECANE, 3,8-DIMETHYL- | 14.72 | 580 | J |
| 14. 7289-40-9 | ETHER, HEPTYL HEXYL | 16.15 | 350 | J |
| 15. 62238-13-5 | DECANE, 2,3,7-TRIMETHYL- | 17.00 | 200 | J |
| 16. 62016-37-9 | OCTANE, 2,4,6-TRIMETHYL- | 17.50 | 200 | J |
| 17. 057-10-3 | HEXADECANOIC ACID | 22.92 | 550 | BJ |
| 18. | UNKNOWN | 24.95 | 230 | J |
| 19. 4337-65-9 | HEXANEDIOIC ACID, MONO(2-ETH | 27.39 | 1000 | J |
| 20. 21078-65-9 | 1-DECANOL, 2-ETHYL- | 28.36 | 410 | J |

000300

1F

SEMIVOLATILE ORGANICS ANALYSIS DATA SHEET
TENTATIVELY IDENTIFIED COMPOUNDS

EPA SAMPLE NO.

04BS-0-2

Lab Name: CH2M HILL/LRD Contract: S29017

Lab Code: _____ Case No.: S29017 SAS No.: _____ SDG No.: GC-MS

Matrix: (soil/water) SOIL Lab Sample ID: 29017001

Sample wt/vol: _____ (g/mL) G Lab File ID: 91M1BN1851

Level: (low/med) LOW Date Received: 03/07/91

% Moisture: not dec. 22 dec. _____ Date Extracted: 03/11/91

Extraction: (SepF/Cont/Sonc) SONC Date Analyzed: 03/29/91

GPC Cleanup: (Y/N) N pH: _____ Dilution Factor: 1

Number TICs found: 20

CONCENTRATION UNITS:
(ug/L or ug/Kg) UG/KG

| CAS NUMBER | COMPOUND NAME | RT | EST. CONC. | Q |
|---|---|---|---|---|
| 1. 075-91-2 | HYDROPEROXIDE, 1,1-DIMETHYLE | 6.92 | 58000 | BJ |
| 2. 13475-81-5 | HEXANE, 2,2,3,3-TETRAMETHYL- | 7.97 | 27000 | J |
| 3. 5911-04-6 | NONANE, 3-METHYL- | 8.64 | 39000 | J |
| 4. | UNKNOWN | 9.05 | 21000 | J |
| 5. 620-14-4 | BENZENE, 1-ETHYL-3-METHYL- | 9.24 | 46000 | J |
| 6. 095-63-6 | BENZENE, 1,2,4-TRIMETHYL- | 9.87 | 39000 | J |
| 7. 124-18-5 | DECANE | 9.94 | 37000 | J |
| 8. 13475-78-0 | HEPTANE, 5-ETHYL-2-METHYL- | 10.34 | 32000 | J |
| 9. | UNKNOWN | 10.54 | 40000 | J |
| 10. 535-77-3 | BENZENE, 1-METHYL-3-(1-METHY | 10.99 | 94000 | J |
| 11. | UNKNOWN | 11.17 | 23000 | J |
| 12. 098-06-6 | BENZENE, (1,1-DIMETHYLETHYL) | 11.37 | 22000 | J |
| 13. 1072-05-5 | HEPTANE, 2,6-DIMETHYL- | 11.70 | 36000 | J |
| 14. 62108-23-0 | DECANE, 2,5,6-TRIMETHYL- | 12.54 | 15000 | J |
| 15. | UNKNOWN | 12.64 | 30000 | J |
| 16. 1002-43-3 | UNDECANE, 3-METHYL- | 12.82 | 16000 | J |
| 17. 6975-98-0 | DECANE, 2-METHYL- | 13.32 | 27000 | J |
| 18. 6975-98-0 | DECANE, 2-METHYL- | 14.79 | 19000 | J |
| 19. 17301-30-3 | UNDECANE, 3,8-DIMETHYL- | 16.20 | 13000 | J |
| 20. | UNKNOWN | 32.46 | 23000 | J |



FORM I SV-TIC 1/87 Rev.

DATA VALIDATION

CASE: 29017 SITE: 2 ANALYSIS: INORG

LAB NOTES: Pre-digestion spike out for Sb, Cr, Se but acceptable post-d.

%D Cr dup. out Se used MSA

HOLDING TIMES: Date Prepped 3/19 and 3/13 - 3/6 spample : ok

NUMBER OF SAMPLES: Soil 5 Water 1

CALIBRATION

Initial: water = ok S - ok

Continuing: water - ok S - ok

COEFFICIENT:

BLANKS

Method: Soil Ag - 0.205 Se 0.162 Water 5.9 Zn

Field: Zn 2.68 (x5 = 13) All conc. found in samples were higher. no flags

FIELD DUPLICATES:

SURROGATES:

MS/MSD:

INTERNAL STANDARDS: TUNING:

OTHER:

SUMMARY: Pre- + Post- dig spike both low for Se - J for the hits, but I also gave the one non-hit a UJ which you may not want, as we are not flagging Organic non-detects.

DATA VALIDATION

CASE: 29032 SITE: QC ANALYSIS: VOA

LAB NOTES: (1) -003 diluted - $CS_2$ problem → from inadequate water purification system

(2) Blank contam.: Aceton, MeCl + TCE

(3) Surrogates -2out but acceptable (4) ms/msD with 29017.015

HOLDING TIMES:

NUMBER OF SAMPLES: Soil Water 3 = 2 FB + 1 Trip B

CALIBRATION
Initial: ok

Continuing: Acetone 34.3 %D no other hits effected
" not present in associated sample - no action

COEFFICIENT: NA

BLANKS
Method: (1) MeCl 8; Acetone 10 (3) MeCl 12, Acetone 8 (DL) MeCl 8 Ace 7
(2) MeCl 6 TCE 1
Field: ~~both~~ all are blanks

FIELD DUPLICATES: none

SURROGATES: -003 (Travel Blank) high - all positive results = J

MS/MSD: ok

INTERNAL STANDARDS: ok TUNING: ok

OTHER:

SUMMARY:

DATA VALIDATION

CASE: 29032 SITE: QC ANALYSIS: SVOC

LAB NOTES: (1) N-nitrosodiphenylamine in blank
(2) -002 - low surr. %R
(3) MS/MSD with 29017 -015

HOLDING TIMES: 3/12 (extract.) - 3/7 sampled = ok

NUMBER OF SAMPLES: Soil - Water 2 - both field blanks

CALIBRATION
Initial: ok

Continuing: Benzoic acid 0.029 RRF50, 70.1 %D
Nitroaniline 35.8 %D - no hits, no flags

COEFFICIENT: NA

BLANKS
Method: n-Nitrosodiphenylamine 2 - not in samples

Field: both contain BEHP

FIELD DUPLICATES: none

SURROGATES: Phenol-d5 - 4%R - all positives in sample 2 flagged J

→ SOW + HAZWRAP says non-detects should be rejected, but limits ~~MS/MSD:~~ are 10-94 - I didn't reject because you didn't in your report, and because we don't list all the compounds.

INTERNAL STANDARDS: OK TUNING: OK

OTHER: alkyl groups in TICs 4%R - all positives flagged J

SUMMARY:

# DATA VALIDATION

CASE: 29032 SITE: QC ANALYSIS: INORG

LAB NOTES: —

HOLDING TIMES: 3/19-13 prep — 3/7 sampling = ok

NUMBER OF SAMPLES: Soil _____ Water 2

CALIBRATION

Initial: ok

Continuing: ok

COEFFICIENT: correlation Not found

BLANKS

Method: Ag -1.2 ; Zn 5.9

Field: Both samples are field blanks; both contain Pb + Zn

FIELD DUPLICATES: none

SURROGATES: _____

MS/MSD: _____

INTERNAL STANDARDS: — TUNING: —

OTHER: _____

SUMMARY: _____

# DATA VALIDATION

CASE: 29032 SITE: 4 ANALYSIS: BTEX

LAB NOTES: MS/MSD w/ 28998-2

HOLDING TIMES: 3/21 analysis date - 3/07 sampling date = 14 days

NUMBER OF SAMPLES: Soil — Water 6 * (2 missing?)

CALIBRATION
Initial: ok

Continuing:

COEFFICIENT: NA

BLANKS
Method: nothing found

Field: not analyzed

FIELD DUPLICATES: not requested

SURROGATES: ~~ok~~ high for samples 133-143; ok for 602/8020 - 96-113

MS/MSD:

INTERNAL STANDARDS: ~~TUNING~~ Control Charts - ok

* OTHER: C of C and Field Inventory list ERB-06-37 and P7BW as samples (note "See ref #") but no mention of these by lab.

SUMMARY: no detects

DATA VALIDATION

CASE: 29032 SITE: 4 ANALYSIS: PNA

LAB NOTES: control charts incomplete

coelution between indeno (1,2,3-cd) pyrene and dibenzo (a,h) anthracene

HOLDING TIMES: 3/13 extraction date - 3/7 = 6 days

NUMBER OF SAMPLES: Soil — Water 7

CALIBRATION

Initial: high RSD in the methyl naphthalenes (41.4 + 38.8) in confirm. column only

Continuing: 37.3%D for indeno/dibenzo (coeluting: see above lab notes)

COEFFICIENT:

BLANKS

Method: nothing found

Field: ~~samples 9 + 10~~ Not analyzed

FIELD DUPLICATES: samples 9 + 10

SURROGATES: low for deca 48-59 %R; low to ok for Terp 62-130

MS/MSD: range is 70 - 130; duplicate range ~~64-118~~ 61-94

INTERNAL STANDARDS: TUNING:

OTHER:

SUMMARY: nothing found in any samples, so I'm worried about the low surrogate recoveries (can't find acceptable limits in the Fed Register for 610

CH2M HILL Engineers Planners Economists Scientists

POLYNUCLEAR AROMATIC HYDROCARBONS
SURROGATE RECOVERY

Primary Analysis Instrument ID: GC 3700

| | Date | Laboratory Reference No. | EPA-610 Surrogate Recovery Decafluorobiphenyl | EPA-610 Surrogate Recovery Terphenyl-d14 |
|---|---|---|---|---|
| 01 | 04-04-91 | Method Blank | 83 | 60 |
| 02 | 03-27-91 | 29032 - 4 | 49 | 111 |
| 03 | 03-27-91 | 29032 - 5 | 48 | 119 |
| 02 | 03-27-91 | 29032 - 6 | 54 | 130 |
| 03 | 03-27-91 | 29032 - 7 | 57 | 117 |
| 04 | 03-27-91 | 29032 - 8 | 48 | 121 |
| 05 | 03-27-91 | 29032 - 9 | 53 | 129 |
| 06 | 03-27-91 | 29032 - 10 | 58 | 124 |
| 07 | 03-27-91 | 29032 - M10 | 59 | 62 |
| 08 | 03-27-91 | 29032 - D10 | 56 | 66 |

EPA-610 Surrogate standards reported as percent recovery.

NA = Not Analyzed.

Comments:

Approved By: Greg Jorke

kdh.I

000163

# DATA VALIDATION

CASE: 29041 SITE: 1 ANALYSIS: BTEX

LAB NOTES: The soil sample at 5X dilution - interference with IS
MS/MSD is acceptable - not included in package

HOLDING TIMES: 3/14 (analysis) - 3/7 = 7 days

NUMBER OF SAMPLES: Soil 1 Water 1 = ERB

CALIBRATION
Initial: ok

Continuing: ok

COEFFICIENT: not included

BLANKS
Method: clean 112% surr. R

Field: nothing found

FIELD DUPLICATES: none

SURROGATES: ok

MS/MSD: Not available

INTERNAL STANDARDS: ~~TUNING~~: control chart ok

OTHER:

SUMMARY:

DATA VALIDATION

CASE: 29041 SITE: 1 ANALYSIS: PNA

LAB NOTES: discrepancy between 1ST run (130 ug/L) and confirmation run (9 ug/L) for 1-methyl naphthalene - matrix interference

HOLDING TIMES:

NUMBER OF SAMPLES: Soil 1 Water 1

CALIBRATION
Initial: 30.18 %RSD for benzo (ghi) perylene
I can't tell if IC or CC is for the water or the soil sample
Continuing:

COEFFICIENT:

BLANKS
Method: nothing found
Field: ERB - no hits but surrogate recoveries just above limits (49 and 53)

FIELD DUPLICATES:

SURROGATES: %R for method blank below 43-116 limits = 41

MS/MSD:

INTERNAL STANDARDS: ~~TUNING:~~ Control chart - ok

OTHER: see notes - I gave the 130 a J

SUMMARY:

# DATA VALIDATION

CASE: 29046 SITE: 4 ANALYSIS: BTEX

LAB NOTES: IS low Surrogates - high MS/MSD w/ this package

HOLDING TIMES: 3/21 analysis - 3/8 sampled = 13 days

NUMBER OF SAMPLES: Soil 6 Water 2 = 1 ERB + 1 Trip

CALIBRATION

Initial: date given = 2/21

3/15 for standards - ok

Continuing: ok

COEFFICIENT: - date given: + 7/9/91 - not ok
4/1/91 - all ok for that date

BLANKS

Method: no hits

Field: no hits

FIELD DUPLICATES: no hits

SURROGATES: Lowest surrogate recovery = 112%R (see attached) - up to 285% R

MS/MSD: Benzene 182%R dup 265%R
Toluene 123 167

INTERNAL STANDARDS: TUNING:

OTHER:

SUMMARY: nothing found in samples despite high surrogate + MS recoveries

Engineers
Planners
Economists
Scientists

VOLATILES SURROGATE RECOVERY

Primary Analysis Instrument ID: VAR 3600

| | Date | Laboratory Reference No. | EPA-8020 & 602 BTEX Surrogate Recovery Fluorobenzene |
|---|---|---|---|
| 01 | 03-20-91 | Method Blank | 128 |
| 02 | 03-21-91 | Method Blank | 126 |
| 03 | 03-21-91 | 29046 - 1 | 151 |
| 04 | 03-21-91 | 29046 - 2 | 125 |
| 05 | 03-21-91 | 29046 - 3 | 112 |
| 06 | 03-21-91 | 29046 - 4 | 285* |
| 06 | 03-21-91 | 29046 - 4RE | 279* |
| 07 | 03-21-91 | 29046 - 5 | 130 |
| 08 | 03-21-91 | 29046 - 6 | 131 |
| 09 | 03-22-91 | 29046 - M04 | 177* |
| 10 | 03-22-91 | 29046 - D04 | 232* |

| Surrogate Standard | Acceptane Range Water | Acceptane Range Soil |
|---|---|---|
| Fluorobenzene | 60 - 132 | 53 - 152 |

EPA-8080 & 602 Surrogate standards reported as percent recovery.

NA = Not Analyzed.

Comments: * Outside calibration range.

Approved By: Greg Jordan

kdh.H

000028

# DATA VALIDATION

CASE: 29046 SITE: 4 ANALYSIS: PAH

LAB NOTES: indeno (1,2,3-cd) pyrene coelutes w/ dibenzo(a,h) anthracene

HOLDING TIMES: 3/13 ext - 3/7 samp. = ok

NUMBER OF SAMPLES: Soil 3 Water 1

CALIBRATION

Initial: benzo (g,h,i) perylene 30.18 %RSD (confirm = 7 %RSD)

RRF ok

Continuing: benzo (g,h,i) perylene - 40.6 %D (confirm 32.6 %D)

COEFFICIENT: not given

BLANKS

Method: no hits

Field: no hits

FIELD DUPLICATES: not requested

SURROGATES:

MS/MSD: not requested

INTERNAL STANDARDS:

OTHER:

Surrogate Control Charts ~~TUNING:~~ No control charts yet for soils. Those for water have extremely wide limits = -5 to 125(!)

SUMMARY: no hits in samples

# Appendix G
# SAMPLING REPORT FROM THE ALABAMA HIGHWAY DEPARTMENT

STATE OF ALABAMA
HIGHWAY DEPARTMENT

MONTGOMERY, ALABAMA 36130

GUY HUNT
GOVERNOR

ROYCE G. KING
HIGHWAY DIRECTOR

December 11, 1990

Mr. Gary Hinkle, Chief
Installation Restoration Programs Branch
Environmental Division
National Guard Bureau
Andrews Air Force Base, D.C. 20331-60080

Re: Project No. 51-006-003-008-901
US 80/Montgomery, AL

Dear Mr. Hinkle:

As you may recall, we wrote you on May 24, 1990, (copy attached) regarding highway construction activities along US 80 which is located adjacent to Dannelly Field ANGB. Enclosed you will find a copy of information generated as a result of our sampling activities. As you will note, we did not find that a major problem existed in this area with the exception that it appeared to us that the underground fuel storage next to the AASF hangar was leaking into the adjacent creek.

Per our May 24th letter, I am enclosing a copy of an invoice recently received from the ADEM Lab for sample analysis. Remittance for these costs should be submitted to the Alabama Highway Department at the above referenced address. Please reference the above project number and submit to my attention.

The invoices are misleading in that the total per sample is not in dollars as indicated, but is work time units. To convert these charges to dollars multiply these charges by 1.19. The total work time units is 4,732 which equates to $5,631.08.

Should you have questions, please feel free to contact this Office.

Yours very truly,

Larry Lockett

Larry Lockett
Materials and Tests Engineer

BEC:sl
Attachment (3)

cc: File

20 DEC 1990
RECEIVED

STATE OF ALABAMA
HIGHWAY DEPARTMENT
MONTGOMERY, ALABAMA 36130

GUY HUNT
GOVERNOR

ROYCE G. KING
HIGHWAY DIRECTOR

May 24, 1990

Mr. Gary Hinkle, Chief
Installation Restoration Programs Branch
Environmental Division
National Guard Bureau
Andrews Air Force Base, D.C. 20331-6008

Dear Mr. Hinkle:

This letter is to confirm a telephone conversation of Monday, May 21, between Mr. David Hippensteel of your staff and Mr. B. E. Cox, a member of my staff. The topic discussed was potentially contaminated state right-of-way located along US 80 which is adjacent to Dannelly Field, Montgomery, Alabama.

During past operations it appears that various compounds may have drained from both the Air Guard and Army Guard Bases on Dannelly to State property. In order to determine if any contamination exist on State property from these facilities, sampling will be conducted in accordance with contract No. DE-AC05-840R21400 for sites 3 and 5. Additional sampling will be conducted along the perimeter fence in the vicinity of sites 3 and 5 where disposal may have occurred. The above referenced sites are associated with the Air Guard Facility.

In order to ensure that past operational and disposal practices by the Army Guard have not impacted State property, additional sampling will be conducted along the perimeter fence. Also, each major drainage ditch serving the Army Guard will be sampled.

As explained to Mr. Hippensteel it is imperative that this work be accomplished as soon as possible in order to prevent safety problems associated with highway construction in the area. Therefore, this Division will sample these areas in the near future. It is my understanding that NGB will reimburse the State for the cost of this work. Sample results will be forwarded to NGB for review. Should this sampling indicate an environmental problem, then further coordination relative to corrective action will be required.

Should you have questions, please feel free to contact this Office.

Yours very truly,

Larry Lockett

Larry Lockett
Materials and Tests Engineer

BEC:sl

cc: *Mr. Wm. J. Hartzog*
*Mr. Mitch Kilpatrick*

# STATE OF ALABAMA
# HIGHWAY DEPARTMENT

MONTGOMERY, ALABAMA 36130

GUY HUNT
GOVERNOR

ROYCE G. KING
HIGHWAY DIRECTOR

MEMORANDUM

DATE: July 9, 1990

TO: Larry Lockett
Materials & Test Engineer

FROM: Bernard E. Cox, Jr. BEC
Environmental Engineer

SUBJECT: Project: 51-006-003-008-901
US 80 At Dannelly Field

On Friday, May 25, 1990, the writer collected 19 samples (soil and surface water), on right-of-way adjacent to Dannelly Field. The samples were collected to determine if past disposal practices by Army and Air Guard units at Dannelly had resulted in the creation of hazardous material sites on AHD ROW. This issue was raised by National Guard Bureau (NGB) in a letter to AHD dated May 3, 1990. In this letter NGB indicated that AHD would become responsible for any required remedial action should construction activities commence on potential sites.

Follow-up phone conversation and correspondence with NGB resulted in their agreeing to pay for sampling cost along the Dannelly-AHD ROW. Additionally, NGB was informed and now agrees that should remedial action be required, they (NGB) would be responsible for paying corrective action cost.

The writer was met at the sampling site by Johnny Day, project manager, for AHD. Sampling began at the west end of the area in question, on the west-side of Ft. Rufus Shepard. Four samples were collected between Station 423+48 and 420+85. No unusual traits were noted in this area. All soil samples were composed of numerous grab samples each 0 to 12 inches deep. These samples were composited in a metal pan lined with aluminum foil. Sampling spades were decontaminated with distilled water between sampling events.

Sampling progressed from Station 420+63 to Station 411+79. Seven samples were collected in this area. A noticeable kerosene odor was detected in the stream adjacent to the AASF hangar. Sample 2-3-4 was a water sample taken approximately 10 feet from the Guard frontage road in the drainage ditch. Samples 2-5-1 and 2-6-3/5 were also collected from this drainage course. Guard personnel informed the writer that a JP-4 UST located next to the drainage course had been emptied the morning of the 25th.

Sampling continued eastwardly from Station 411+59 to Station 401+60. Four samples were collected in this area with no unusual circumstances encountered. A composite sample from Station 411+59 to Station 404+91 was collected as was a composite sample from Sta. 404+61 to Sta. 404+60. Discreet samples were collected in the creek between Stations 401+60 and 401+42.

Sampling progressed from Station 401+42 to Station 390+06, the east end point of the sampling area. Four samples were taken in this area with 4-1-1/3/5 being a composite sample along the old fence line. Three discreet samples were collected in the ditch outfall on the east end of the sampling zone.

The following numbering system for the samples was developed:

A-B-C/D/E.
A - Position signifies west to east with 1 on west end and 4 on the east end.
B- Sequential number, from 1 to 7.
C/D/E - Position number with following values - (1- TPH); (2-BTEX-Soil); (3-Base Neutrals); (4-BTEX-Water); (5-Lead).

Sampling Protocol- Three types of samples were collected during the sampling Phase. These were composite soil, composite sludge and water. Composite soil samples were taken along the old fence line which is presently being moved by AHD contractors. Samples of this type were collected by taking a discreet sample every 10 to 15 feet along the fence and compositing by mixing in a lined pan. These samples were normally taken from 0 to 12 inches using aluminum scoops which were decontaminated with distilled water between sampling events. Samples collected in this manner were 1-2-1; 1-6-3/5; 2-1-1/3/5; 2-7-1/3/5; 3-1-1/3/5; 3-2-1/3/5; and 4-1-1/3/5.

Composite sludge soil samples were collected from four drainage courses exiting Dannelly onto AHD right-of-way. Either two or three discreet points were consolidated to make one sample. Materials were collected with an aluminum scoop and placed directly into a pint jar. Jars were filled to maximum capacity and sealed using aluminum foil and a screw on cap. Samples 1-3-1; 1-5-2; 2-2-1; 2-4-2; 2-5-1; 2-6-3/5; 3-3-2; 4-3-2; 4-3-3/5; and 4-4-1, were collected in this manner.

Two water samples, 2-3-4 and 3-4-4, were collected for volatile analysis. Volatile bottles secured from the ADEM laboratory were used for collection purposes. Only two of the four drainage courses exiting Dannelly had flow at the time of sampling. Samples were collected by placing bottles in the flow path and filling until no bubbles were left in the bottles. Bottle tops were then placed on the samples which were then checked to insure zero head space.

Samples for TPH analysis were taken to the AHD Environmental Lab and relinquished by the writer to Pat McCartha. Chain of custody was maintained and relinquished as required. All other samples were taken to the ADEM Lab and relinquished using appropriate chain of custody.

Sample results were received over a period of time from June 8 through July 1, 1990. Copies of the sample results are attached for your review. The following is a summary of the attached results:

June 5, 1990 - BTEX-ADEM Lab - Only sample 2-3-4 showed any volatile compounds. This sampled showed 469.7 PPB of 1-1-1- Trichlorethane. This

sample was the water sample in the creek next to the AASF where kerosene was noted at the time of sampling. The completed BTEX-Volatile sampling was forwarded June 8, 1990, from ADEM to this Office. Only sample 2-4-2, a composite soil sample in the same creek, showed any compounds. This sample showed .19 ug\l of 1,1,1, - Trichloroethane.

June 8, 1990 - TPH results -AHD Lab - Eight samples were analyzed for TPH with all eight showing some signs of TPH. This was to be expected since the samples were taken along the fence line bordering a major highway where diesel fuel and other fuels had been used by the Guard for weed control. The highest TPH value (575 ppm) was a composite sample taken between Stations 413+90 and 411+79. This is the fence line immediately in front of the AASF Hangar. The next highest reading was found at Station 390+83. This sample was collected next to a sorbent boom in the drainage ditch on Guard property.

June 19/26, 1990 - Base Neutrals; Lead; EPTOX Metals - No regulated EPT metals (including lead) were found in any samples. All total lead levels were low and consistent with normal soil conditions. No base neutrals were observed in any samples other than 4-4-3/5. Low levels (PPB) of various base neutral compounds were found in this sample which was collected in the drainage ditch on the east end of the project.

Conclusions - Diesel fuel was known to be used as a weed killer by Guard personnel along the fence line so finding TPH in this area was expected. No base neutrals, metals or volatiles were found in these samples. Thus, none of this area would constitute a hazardous waste or other regulated site. It should be noted that TPH is an indicator only and has regulatory value only when used in conjunction with an UST.

Only two questionable areas were noted and they are both drainage ditches exiting Guard property onto AHD ROW. These areas are adjacent to UST operated by Guard units. TPH and some indicators parameters, at very low levels, were found in two samples. Neither site should impact AHD construction activities.

Recommendations - Sampling results should be forwarded to NGB. Construction activities should continue as no regulated sites were noted on AHD ROW.

BEC:sl

cc: Mr. Mitch Kilpatrick
File

ARMSTRONG
UGB

# STATE OF ALABAMA
# HIGHWAY DEPARTMENT

MONTGOMERY, ALABAMA 36130

GUY HUNT
GOVERNOR

June 8,1990

ROYCE G. KING
HIGHWAY DIRECTOR

M E M O R A N D U M

TO: Mr. Stanley R. Armstrong
Assistant Materials & Tests Engineer

FROM: Pat McCartha

RE: Test results for Petroleum Hydrocarbon Contamination; Project 51-006-003-901 Montgomery county

Attached are test results for samples taken from various locations at the referenced site. Copies are being sent to the Division for their information.

wpm
cc: Division
Mr. Bill Holmes
File

*B*

LAB NO... SEE BELOW

BMT-16 Rev.

ALABAMA HIGHWAY DEPARTMENT

COPIES TO. Chemical Lab
.....
.....
.....
.....
.....
.....
.....

PROJECT NO(S). 51-006-003-901
.....

COUNTY..... Montgomery

DIVISION..... 6

DATE..... June 8, 1990

REPORT OF )INSPECTION
)ANALYSIS ON SAMPLE OF.. Soil for Total Petroleum Hydrocarbon

SOURCE OF MATERIAL..... See Station & Offset
SAMPLED BY / DATE..... B. Cox; 5/25/90
SUBMITTED BY / DATE..... B. Cox; 05/25/90
Received By/ Date..... Strickland; 05/25/90
Tested By/ Date..... D. Hicks; 06/06/90
ADEM Reference No.....
REMARKS.....
.....

TEST RESULTS

| LAB NO. | MARKS | MATERIAL | TOTAL PETROLEUM HYDROCARBON |
|---|---|---|---|
| 3ql-1918 | 1-2-1 | Soil | 24 |
| 3ql-1919 | 2-1-1 | Soil | 77 |
| 3ql-1920 | 2-5-1 | Soil | 159 |
| 3ql-1921 | 2-7-1 | Soil | 575 |
| 3ql-1922 | 3-1-1 | Soil | 207 |
| 3ql-1923 | 3-2-1 | Soil | 82 |
| 3ql-1924 | 4-1-1 | Soil | 44 |
| 3ql-1925 | 4-4-1 | Soil | 456 |

Total Petroleum Hydrocarbon results in mg/kg on a dry weight basis

wpm

E. L. McCutchin
TESTING ENGINEER

# ADEM

## ALABAMA
## DEPARTMENT OF ENVIRONMENTAL MANAGEMENT

Guy Hunt
Governor

Leigh Pegues, Director

1751 Cong. W. L.
Dickinson Drive
Montgomery, AL
36130
205/271-7700

Field Offices:

Unit 806, Building 8
225 Oxmoor Circle
Birmingham, AL
35209
205/942-6168

P.O. Box 953
Decatur, AL
35602
205/353-1713

2204 Perimeter Road
Mobile, AL
36615
205/479-2336

June 26, 1990

M E M O R A N D U M

TO: Buddy Cox
Highway Department

FROM: John Chitwood JCC

SUBJECT: Laboratory Results

Attached are laboratory results from samples submitted to the ADEM Central Laboratory for analysis by the Highway Department.

JC/mpt

Attachments

- SAMPLE ANALYSIS REPORT -
06/22/90

To: ALABAMA HIGHWAY DEPARTMENT

Attn: BUDDY COX

Lab number : 0105303
Sample number : HIWAY
Sample matrix : SOIL

Report Date: 06/22/90

COLLECTION INFORMATION
Date/Time/By: 05/25/90 9:30 COX
Location : DANNELLY ANGB, 1-6-3/5

ADEM CENTRAL LABORATORY
- RESULTS REPORT -

June 22, 1990

| Lab# | Test | Result | Units | DL* | Analdate |
|---|---|---|---|---|---|
| 0105303 | 1,2,4,-Trichlorobenzene | 0.33 | ug/L | U | 05/28/90 |
| | 1,2-Dichlorobenzene | 0.33 | ug/L | U | 05/28/90 |
| | 1,2-Diphenylhydrazine | 0.33 | ug/L | U | 05/28/90 |
| | 1,3-Dichlorobenzene | 0.33 | ug/L | U | 05/28/90 |
| | 1,4-Dichlorobenzene | 0.33 | ug/L | U | 05/28/90 |
| | 2,3,7,8-Tetrachlorodibe | 0.33 | ug/L | U | 05/28/90 |
| | 2,4-Dinitrotoluene | 0.33 | ug/L | U | 05/28/90 |
| | 2,6-Dinitrotoluene | 0.33 | ug/L | U | 05/28/90 |
| | 2-Chloronaphthalene | 0.33 | ug/L | U | 05/28/90 |
| | 3,3'-Dichlorobenzidine | 0.33 | ug/L | U | 05/28/90 |
| | 4-Bromophenyl phenyl eh | 0.33 | ug/L | U | 05/28/90 |
| | 4-Chlorophenyl phenyl e | 0.33 | ug/L | U | 05/28/90 |
| | Acenaphthalene | 0.33 | ug/L | U | 05/28/90 |
| | Acenaphthene | 0.33 | ug/L | U | 05/28/90 |
| | Silver-EP | 0.05 | mg/L | U | 06/13/90 |
| | Anthracene | 0.33 | ug/L | U | 05/28/90 |
| | Arsenic-EP | 0.01 | mg/L | U | 06/13/90 |
| | Benzo(a)anthacene | 0.33 | ug/L | U | 05/28/90 |
| | Barium-EP | 0.50 | mg/L | U | 06/13/90 |
| | Benzo(a)pyrene | 0.33 | ug/L | U | 05/28/90 |
| | Benzo(b)fluoanthene | 0.33 | ug/L | U | 05/28/90 |
| | Butyl benzyl phthalate | 0.33 | ug/L | U | 05/28/90 |

* U denotes results less than the instrument detection limit.

detection limit.

STATE OF ALABAMA
DEPARTMENT OF ENVIRONMENTAL MANAGEMENT
MONTGOMERY, ALABAMA

LABORATORY: (X) Montgomery ( ) Mobile ( ) Birmingham

Sample Type:

| | | | | | | | |
|---|---|---|---|---|---|---|---|
| Potable Water | [ ] | Landfill Leachate | [ ] | Toxic Extraction | [X] | Composite | |
| Surface Water | [ ] | Hazardous Wastesite | [ ] | Ignitability | [ ] | Grab | |
| Soil/Sediment | [X] | Groundwater | [ ] | Corrosivity | [ ] | Container P | |
| Wastewater | [ ] | Waste (Special Handling) | [ ] | Reactivity | [ ] | G | |

Source Dannelly ANGB US80

Location B-6-3/5

( ) Discharge from _____ (Point Source) to _____ (Receiving Water)

Comments _____ Preservative(s) _____

pH _____ D.O. _____ Sp. Cond. _____ Salinity _____ Turb. _____

PARAMETERS

| Date | Value (mg/l) | Date | Value (mg/l) | Date | Value (mg/l) | Date | Value (mg/l) |
|---|---|---|---|---|---|---|---|
| | Acid | | Phenol | | Al | | Mn |
| | ALK | | $PO_4$-P | | Ag | | Na |
| | $BOD_5$ | | ($S^=$) | | As | | Ni |
| | ($Cl^-$) | | ($SO_4^=$) | | Ba | | Pb |
| | COD | | TSS | | Ca | | Pt |
| | $CN^-$ | | TDS | | Cd | | Sb |
| | ($F^-$) | | TFS | | $Cr^T$ | | Se |
| | Hard | | TKN | | $Cr^{+6}$ | | Zn |
| | $NH_3$-N | | TOC | | Cu | | Other |
| | $NO_3$-N | | TON | | Fe | | Base Neutrals |
| | $NO_2$-N | | TS | | Hg | | Lead (Tot & EPT) |
| | O & G | | VSS | | Mg | | |

F. Coli. _____

| | | | | | |
|---|---|---|---|---|---|
| B. Cox | B. E. C. | 9:30 5/25/90 | B. Cox | B. E. C. | 2:00 5/25/90 |
| SAMPLE COLLECTED BY | (Signature) | DATE/TIME | RELINQUISHED BY | (Signature) | DATE/TIME |
| RECEIVED BY | (Signature) | DATE/TIME | RELINQUISHED BY | (Signature) | DATE/TIME |
| RECEIVED BY | (Signature) | DATE/TIME | RELINQUISHED BY | (Signature) | DATE/TIME |
| Velora Oliver | 5/25 | 2:00 | 0105303 | | |
| RECEIVED IN LAB BY | (Signature) | DATE/TIME | LABORATORY I.D. NO. | | |

SEND REPORT TO: Cox (Highway Mat & Test)

ADEM Form 68 5/83

TSS = Total Non-Filtrable Residue TS = Total Residue
TDS = Total Filtrable Residue

ADEM CENTRAL LABORATORY

- SAMPLE ANALYSIS REPORT -
06/01/90

To: ALABAMA HIGHWAY DEPARTMENT

JUN 1990
RECEIVED
Adem
Field Office
Mobile

Attn: BUDDY COX

Lab number : 0105307
Sample number : HIWAY
Sample matrix : SOIL

Report Date: 06/01/9

COLLECTION INFORMATION
Date/Time/By: 05/25/90 9:10 COX
Location : DANNELLY ANGB US80, 1-5-2

ADEM CENTRAL LABORATORY
- RESULTS REPORT -

June 1, 1990

| Lab# | Test | Result | Units | DL* | Analdate |
|---|---|---|---|---|---|
| 0105307 | 1,1,1,2-Tetrachloroetha | 0.0500 | ug/g | U | 05/31/90 |
| | 1,1,1-Trichloroethane | 0.0500 | ug/g | U | 05/31/90 |
| | 1,1,2,2-Tetrachloroetha | 0.0500 | ug/g | U | 05/31/90 |
| | 1,1,2Trichloroethane | 0.0500 | ug/g | U | 05/31/90 |
| | 1,1-Dichloroethane | 0.0500 | ug/g | U | 05/31/90 |
| | 1,1-Dichloroethylene | 0.0500 | ug/g | U | 05/31/90 |
| | 1,1-Dichloropropene | 0.0500 | ug/g | U | 05/31/90 |
| | 1,2,3-Trichlorobenzene | 0.0500 | ug/g | U | 05/31/90 |
| | 1,2,3-Trichloropropane | 0.0500 | ug/g | U | 05/31/90 |
| | 1,2,4-Trichlorobenzene | 0.0500 | ug/g | U | 05/31/90 |
| | 1,2,4-Trimethylbenzene | 0.0500 | ug/g | U | 05/31/90 |
| | 1,2-Dicholoethane | 0.0500 | ug/g | U | 05/31/90 |
| | 1,2-Dichloropropane | 0.0500 | ug/g | U | 05/31/90 |
| | 1,3,5-Trimethylbenzene | 0.0500 | ug/g | U | 05/31/90 |
| | 1,3-Dichloropropane | 0.0500 | ug/g | U | 05/31/90 |
| | 1,3-Dichloropropene | 0.0500 | ug/g | U | 05/31/90 |
| | 2,2-Dichloropropane | 0.0500 | ug/g | U | 05/31/90 |
| | Tetrachloroethylene | 0.0500 | ug/g | U | 05/31/90 |
| | Bromobenzene | 0.0500 | ug/g | U | 05/31/90 |
| | Bromochloromethane | 0.0500 | ug/g | U | 05/31/90 |
| | Bromodichloromethane | 0.0500 | ug/g | U | 05/31/90 |
| | Benzene | 0.0500 | ug/g | U | 05/31/90 |

* U denotes results less than the instrument detection limit.

ADEM CENTRAL LABORATORY
- RESULTS REPORT -

June 1, 1990

| Lab# | Test | Result | Units | DL* | Analdate |
|---|---|---|---|---|---|
| 0105307 | Bromomethane | 0.0500 | ug/g | U | 05/31/90 |
| | cis-1,2-Dichloroethylen | 0.0500 | ug/g | U | 05/31/90 |
| | Chlorobenzene | 0.0500 | ug/g | U | 05/31/90 |
| | Chlorodibromomethane | 0.0500 | ug/g | U | 05/31/90 |
| | Chloroethane | 0.0500 | ug/g | U | 05/31/90 |
| | Bromoform | 0.0500 | ug/g | U | 05/31/90 |
| | Chloroform | 0.0500 | ug/g | U | 05/31/90 |
| | Chloromethane | 0.0500 | ug/g | U | 05/31/90 |
| | Carbon Tetrachloride | 0.0500 | ug/g | U | 05/31/90 |
| | Dibromomethane | 0.0500 | ug/g | U | 05/31/90 |
| | Dichlorofluoromethane | 0.0500 | ug/g | U | 05/31/90 |
| | Dichloromethane | 0.0500 | ug/g | U | 05/31/90 |
| | Ethylbenzene | 0.0500 | ug/g | U | 05/31/90 |
| | Fluorotrichloromethane | 0.0500 | ug/g | U | 05/31/90 |
| | Hexachlorobenzene | 0.0500 | ug/g | U | 05/31/90 |
| | Isopropylbenzene | 0.0500 | ug/g | U | 05/31/90 |
| | m-Dichlorobenzene | 0.0500 | ug/g | U | 05/31/90 |
| | m-Xylene | 0.0500 | ug/g | U | 05/31/90 |
| | Naphthalene | 0.0500 | ug/g | U | 05/31/90 |
| | n-Butylbenzene | 0.0500 | ug/g | U | 05/31/90 |
| | n-Propylbenzene | 0.0500 | ug/g | U | 05/31/90 |
| | o-Chlorotoluene | 0.0500 | ug/g | U | 05/31/90 |
| | o-Dichlorobenzene | 0.0500 | ug/g | U | 05/31/90 |
| | o-Xylene | 0.0500 | ug/g | U | 05/31/90 |
| | p-Chlorotoluene | 0.0500 | ug/g | U | 05/31/90 |
| | p-Dichlorobenzene | 0.0500 | ug/g | U | 05/31/90 |
| | p-Isopropyltoluene | 0.0500 | ug/g | U | 05/31/90 |
| | p-Xylene | 0.0500 | ug/g | U | 05/31/90 |
| | Secbutylbenzene | 0.0500 | ug/g | U | 05/31/90 |
| | Styrene | 0.0500 | ug/g | U | 05/31/90 |
| | t-1,2Dichloroethane | 0.0500 | ug/g | U | 05/31/90 |
| | Tertbutylbenzene | 0.0500 | ug/g | U | 05/31/90 |
| | Trichloroethylene | 0.0500 | ug/g | U | 05/31/90 |
| | Toluene | 0.0500 | ug/g | U | 05/31/90 |
| | Vinyl Chloride | 0.0500 | ug/g | U | 05/31/90 |

* U denotes results less than the instrument detection limit.

STATE OF ALABAMA
DEPARTMENT OF ENVIRONMENTAL MANAGEMENT
MONTGOMERY, ALABAMA

LABORATORY: (X) Montgomery ( ) Mobile ( ) Birmingham

Sample Type: Potable Water [ ] Surface Water [ ] Soil/Sediment [X] Wastewater [ ]
Landfill Leachate [ ] Hazardous Wastesite [ ] Groundwater [ ] Waste (Special Handling) [ ]
Toxic Extraction [ ] Ignitability [ ] Corrosivity [ ] Reactivity [ ]
Composite (2) Grab Container P G

Source Dannelly ANGB US 80

Location 1-5-2

( ) Discharge from _____ (Point Source) to _____ (Receiving Water)

Comments _____ Preservative(s) _____

pH _____ D.O. _____ Sp. Cond. _____ Salinity _____ Turb. _____

PARAMETERS

| Date | | Value (mg/l) | Date | | Value (mg/l) | Date | | Value (mg/l) | Date | | Value (mg/l) |
|---|---|---|---|---|---|---|---|---|---|---|---|
| | Acid | | | Phenol | | | Al | | | Mn | |
| | ALK | | | $PO_4$-P | | | Ag | | | Na | |
| | $BOD_5$ | | | ($S^=$) | | | As | | | Ni | |
| | ($Cl^-$) | | | ($SO_4^=$) | | | Ba | | | Pb | |
| | COD | | | TSS | | | Ca | | | Pt | |
| | $CN^-$ | | | TDS | | | Cd | | | Sb | |
| | ($F^-$) | | | TFS | | | $Cr^T$ | | | Se | |
| | Hard | | | TKN | | | $Cr^{+6}$ | | | Zn | |
| | $NH_3$-N | | | TOC | | | Cu | | Other | | |
| | $NO_3$-N | | | TON | | | Fe | | BTEX (Vol) | | |
| | $NO_2$-N | | | TS | | | Hg | | | | |
| | O & G | | | VSS | | | Mg | | | | |

F. Coli. _____

| SAMPLE COLLECTED BY (Signature) | DATE/TIME | RELINQUISHED BY (Signature) | DATE/TIME |
|---|---|---|---|
| B. Cox | B. Cox 9:10 5/25/90 | B. Cox | B. Cox 2:00 5/25/90 |

| RECEIVED BY (Signature) | DATE/TIME | RELINQUISHED BY (Signature) | DATE/TIME |
|---|---|---|---|
| | | | |

| RECEIVED BY (Signature) | DATE/TIME | RELINQUISHED BY (Signature) | DATE/TIME |
|---|---|---|---|
| | | | |

| RECEIVED IN LAB BY (Signature) | DATE/TIME | LABORATORY I.D. NO. |
|---|---|---|
| Delora Oliver | 5/25 2:00 | C10 5307 |

SEND REPORT TO: Cox (Mat + Test)

ADEM Form 68 5/83

TSS = Total Non-Filtrable Residue
TDS = Total Filtrable Residue
TS = Total Residue
VSS = Volatile Residue

ADEM CENTRAL LABORATORY

- SAMPLE ANALYSIS REPORT -
05/31/90

To: ALABAMA HIGHWAY DEPARTMENT

JUN 1990
RECEIVED
ADEM
Field Office
Mobile

Attn: BUDDY COX

Lab number : 0105297
Sample number : HIWAY
Sample matrix : SOIL

Report Date: 05/31/9

COLLECTION INFORMATION
Date/Time/By: 05/25/90 9:20 COX
Location : DANNELLY ANGB, 1-3-2

ADEM CENTRAL LABORATORY
- RESULTS REPORT - May 31, 1990

| Lab# | Test | Result | Units | DL* | Analdate |
|---|---|---|---|---|---|
| 0105297 | 1,1,1,2-Tetrachloroetha | 0.0500 | ug/g | U | 05/29/90 |
| | 1,1,1-Trichloroethane | 0.0500 | ug/g | U | 05/29/90 |
| | 1,1,2,2-Tetrachloroetha | 0.0500 | ug/g | U | 05/29/90 |
| | 1,1,2Trichloroethane | 0.0500 | ug/g | U | 05/29/90 |
| | 1,1-Dichloroethane | 0.0500 | ug/g | U | 05/29/90 |
| | 1,1-Dichloroethylene | 0.0500 | ug/g | U | 05/29/90 |
| | 1,1-Dichloropropene | 0.0500 | ug/g | U | 05/29/90 |
| | 1,2,3-Trichlorobenzene | 0.0500 | ug/g | U | 05/29/90 |
| | 1,2,3-Trichloropropane | 0.0500 | ug/g | U | 05/29/90 |
| | 1,2,4-Trichlorobenzene | 0.0500 | ug/g | U | 05/29/90 |
| | 1,2,4-Trimethylbenzene | 0.0500 | ug/g | U | 05/29/90 |
| | 1,2-Dicholoethane | 0.0500 | ug/g | U | 05/29/90 |
| | 1,2-Dichloropropane | 0.0500 | ug/g | U | 05/29/90 |
| | 1,3,5-Trimethylbenzene | 0.0500 | ug/g | U | 05/29/90 |
| | 1,3-Dichloropropane | 0.0500 | ug/g | U | 05/29/90 |
| | 1,3-Dichloropropene | 0.0500 | ug/g | U | 05/29/90 |
| | 2,2-Dichloropropane | 0.0500 | ug/g | U | 05/29/90 |
| | Tetrachloroethylene | 0.0500 | ug/g | U | 05/29/90 |
| | Bromobenzene | 0.0500 | ug/g | U | 05/29/90 |
| | Bromochloromethane | 0.0500 | ug/g | U | 05/29/90 |
| | Bromodichloromethane | 0.0500 | ug/g | U | 05/29/90 |
| | Benzene | 0.0500 | ug/g | U | 05/29/90 |

* U denotes results less than the instrument detection limit.

ADEM CENTRAL LABORATORY
- RESULTS REPORT -

May 31, 1990

| Lab# | Test | Result | Units | DL* | Analdate |
|---|---|---|---|---|---|
| 0105297 | Bromomethane | 0.0500 | ug/g | U | 05/29/90 |
| | cis-1,2-Dichloroethylen | 0.0500 | ug/g | U | 05/29/90 |
| | Chlorobenzene | 0.0500 | ug/g | U | 05/29/90 |
| | Chlorodibromomethane | 0.0500 | ug/g | U | 05/29/90 |
| | Chloroethane | 0.0500 | ug/g | U | 05/29/90 |
| | Bromoform | 0.0500 | ug/g | U | 05/29/90 |
| | Chloroform | 0.0500 | ug/g | U | 05/29/90 |
| | Chloromethane | 0.0500 | ug/g | U | 05/29/90 |
| | Carbon Tetrachloride | 0.0500 | ug/g | U | 05/29/90 |
| | Dibromomethane | 0.0500 | ug/g | U | 05/29/90 |
| | Dichlorofluoromethane | 0.0500 | ug/g | U | 05/29/90 |
| | Dichloromethane | 0.0500 | ug/g | U | 05/29/90 |
| | Ethylbenzene | 0.0500 | ug/g | U | 05/29/90 |
| | Fluorotrichloromethane | 0.0500 | ug/g | U | 05/29/90 |
| | Hexachlorobenzene | 0.0500 | ug/g | U | 05/29/90 |
| | Isopropylbenzene | 0.0500 | ug/g | U | 05/29/90 |
| | m-Dichlorobenzene | 0.0500 | ug/g | U | 05/29/90 |
| | m-Xylene | 0.0500 | ug/g | U | 05/29/90 |
| | Naphthalene | 0.0500 | ug/g | U | 05/29/90 |
| | n-Butylbenzene | 0.0500 | ug/g | U | 05/29/90 |
| | n-Propylbenzene | 0.0500 | ug/g | U | 05/29/90 |
| | o-Chlorotoluene | 0.0500 | ug/g | U | 05/29/90 |
| | o-Dichlorobenzene | 0.0500 | ug/g | U | 05/29/90 |
| | o-Xylene | 0.0500 | ug/g | U | 05/29/90 |
| | p-Chlorotoluene | 0.0500 | ug/g | U | 05/29/90 |
| | p-Dichlorobenzene | 0.0500 | ug/g | U | 05/29/90 |
| | p-Isopropyltoluene | 0.0500 | ug/g | U | 05/29/90 |
| | p-Xylene | 0.0500 | ug/g | U | 05/29/90 |
| | Secbutylbenzene | 0.0500 | ug/g | U | 05/29/90 |
| | Styrene | 0.0500 | ug/g | U | 05/29/90 |
| | t-1,2Dichloroethane | 0.0500 | ug/g | U | 05/29/90 |
| | Tertbutylbenzene | 0.0500 | ug/g | U | 05/29/90 |
| | Trichloroethylene | 0.0500 | ug/g | U | 05/29/90 |
| | Toluene | 0.0500 | ug/g | U | 05/29/90 |
| | Vinyl Chloride | 0.0500 | ug/g | U | 05/29/90 |

* U denotes results less than the instrument detection limit.

STATE OF ALABAMA
DEPARTMENT OF ENVIRONMENTAL MANAGEMENT
MONTGOMERY, ALABAMA

LABORATORY: (X) Montgomery ( ) Mobile ( ) Birmingham

Sample Type:

| | | | | | | | |
|---|---|---|---|---|---|---|---|
| Potable Water | [ ] | Landfill Leachate | [ ] | Toxic Extraction | [ ] | Composite | |
| Surface Water | [ ] | Hazardous Wastesite | [ ] | Ignitability | [ ] | Grab | |
| Soil/Sediment | [X] | Groundwater | [ ] | Corrosivity | [ ] | Container | P |
| Wastewater | [ ] | Waste (Special Handling) | [ ] | Reactivity | [ ] | | G |

Source Dannelly ANGB 11580

Location 1-3-2

( ) Discharge from _____ (Point Source) to _____ (Receiving Water)

Comments _____ Preservative(s) _____

pH _____ D.O. _____ Sp. Cond. _____ Salinity _____ Turb. _____

PARAMETERS

| Date | (mg/l) | Value | Date | (mg/l) | Value | Date | (mg/l) | Value | Date | (mg/l) | Value |
|---|---|---|---|---|---|---|---|---|---|---|---|
| | Acid | | | Phenol | | | Al | | | Mn | |
| | ALK | | | $PO_4$-P | | | Ag | | | Na | |
| | $BOD_5$ | | | ($S^=$) | | | As | | | Ni | |
| | ($Cl^-$) | | | ($SO_4^=$) | | | Ba | | | Pb | |
| | COD | | | TSS | | | Ca | | | Pt | |
| | $CN^-$ | | | TDS | | | Cd | | | Sb | |
| | ($F^-$) | | | TFS | | | $Cr^T$ | | | Se | |
| | Hard | | | TKN | | | $Cr^{+6}$ | | | Zn | |
| | $NH_3$-N | | | TOC | | | Cu | | Other | | |
| | $NO_3$-N | | | TON | | | Fe | | | BTEX-Vol | |
| | $NO_2$-N | | | TS | | | Hg | | | | |
| | O & G | | | VSS | | | Mg | | | | |

F. Coli. _____

SAMPLE COLLECTED BY B. Cox (Signature) B. Cox DATE/TIME 9:20 5/25/90

RELINQUISHED BY B. Cox (Signature) B. Cox DATE/TIME 2:00 5/25/90

RECEIVED BY (Signature) DATE/TIME

RELINQUISHED BY (Signature) DATE/TIME

RECEIVED BY (Signature) DATE/TIME

RELINQUISHED BY (Signature) DATE/TIME

RECEIVED IN LAB BY M. Olmer (Signature) 5/25 DATE/TIME 2:00

LABORATORY I.D. NO. 0105297

SEND REPORT TO: Cox (Mat + Test)

DEM Form 68 5/83

TSS = Total Non-Filtrable Residue
TDS = Total Filtrable Residue
TS = Total Residue

STATE OF ALABAMA
DEPARTMENT OF ENVIRONMENTAL MANAGEMENT
MONTGOMERY, ALABAMA

LABORATORY: (X) Montgomery ( ) Mobile ( ) Birmingham

Sample Type:

| | | | | | | | |
|---|---|---|---|---|---|---|---|
| Potable Water | [ ] | Landfill Leachate | [ ] | Toxic Extraction | [X] | Composite | |
| Surface Water | [ ] | Hazardous Wastesite | [ ] | Ignitability | [ ] | Grab | |
| Soil/Sediment | [X] | Groundwater | [ ] | Corrosivity | [ ] | Container | P |
| Wastewater | [ ] | Waste (Special Handling) | [ ] | Reactivity | [ ] | | G |

Source Dannelly ANGB U580

Location 2-7-3/5

( ) Discharge from _____ (Point Source) to _____ (Receiving Water)

Comments _____ Preservative(s) _____

pH _____ D.O. _____ Sp. Cond. _____ Salinity _____ Turb. _____

PARAMETERS

| Date | Value (mg/l) | | Date | Value (mg/l) | | Date | Value (mg/l) | | Date | Value (mg/l) | |
|---|---|---|---|---|---|---|---|---|---|---|---|
| | | Acid | | | Phenol | | | Al | | | Mn |
| | | ALK | | | $PO_4$-P | | | Ag | | | Na |
| | | $BOD_5$ | | | ($S^=$) | | | As | | | Ni |
| | | ($Cl^-$) | | | ($SO_4^=$) | | | Ba | | | Pb |
| | | COD | | | TSS | | | Ca | | | Pt |
| | | $CN^-$ | | | TDS | | | Cd | | | Sb |
| | | ($F^-$) | | | TFS | | | $Cr^I$ | | | Se |
| | | Hard | | | TKN | | | $Cr^{+6}$ | | | Zn |
| | | $NH_3$-N | | | TOC | | | Cu | | Other | |
| | | $NO_3$-N | | | TON | | | Fe | | Base Neutrals | |
| | | $NO_2$-N | | | TS | | | Hg | | Pb (Tot + CPT) | |
| | | O & G | | | VSS | | | Mg | | | |

F. Coli. _____

| | | | | | |
|---|---|---|---|---|---|
| B. Cox | B. Ell | 11:10 5/25/90 | B. Ell | B. Ell | 2:00 5/25/90 |
| SAMPLE COLLECTED BY | (Signature) | DATE/TIME | RELINQUISHED BY | (Signature) | DATE/TIME |
| RECEIVED BY | (Signature) | DATE/TIME | RELINQUISHED BY | (Signature) | DATE/TIME |
| RECEIVED BY | (Signature) | DATE/TIME | RELINQUISHED BY | (Signature) | DATE/TIME |
| D. Olive | 5/25 | 2:00 | 0105299 | | |
| RECEIVED IN LAB BY | (Signature) | DATE/TIME | LABORATORY I.D. NO. | | |

SEND REPORT TO: Cox (Mat + Test)

ADEM Form 68 5/83

TSS = Total Non-Filtrable Residue
TDS = Total Filtrable Residue
TS = Total Residue
VSS = Volatile Residue

ADEM CENTRAL LABORATORY

- SAMPLE ANALYSIS REPORT -
06/13/90

To: ALABAMA HIGHWAY DEPARTMENT

JUN 1990
RECEIVED
Adem
Field Office
Montg

Attn: BUDDY COX

Lab number : 0105299
Sample number : HIWAY
Sample matrix : SOIL

Report Date: 06/13/90

COLLECTION INFORMATION
Date/Time/By: 05/25/90 11:10 COX
Location : DANNELLY ANGB, 2-7-3/5

ADEM CENTRAL LABORATORY
- RESULTS REPORT - June 13, 1990

| Lab# | Test | Result | Units | DL* | Analdate |
|---|---|---|---|---|---|
| 0105299 | 1,2,4,-Trichlorobenzene | 0.33 | ug/L | U | 05/28/90 |
| | 1,2-Dichlorobenzene | 0.33 | ug/L | U | 05/28/90 |
| | 1,2-Diphenylhydrazine | 0.33 | ug/L | U | 05/28/90 |
| | 1,3-Dichlorobenzene | 0.33 | ug/L | U | 05/28/90 |
| | 1,4-Dichlorobenzene | 0.33 | ug/L | U | 05/28/90 |
| | 2,3,7,8-Tetrachlorodibe | 0.33 | ug/L | U | 05/28/90 |
| | 2,4-Dinitrotoluene | 0.33 | ug/L | U | 05/28/90 |
| | 2,6-Dinitrotoluene | 0.33 | ug/L | U | 05/28/90 |
| | 2-Chloronaphthalene | 0.33 | ug/L | U | 05/28/90 |
| | 3,3'-Dichlorobenzidine | 0.33 | ug/L | U | 05/28/90 |
| | 4-Bromophenyl phenyl eh | 0.33 | ug/L | U | 05/28/90 |
| | 4-Chlorophenyl phenyl e | 0.33 | ug/L | U | 05/28/90 |
| | Acenaphthalene | 0.33 | ug/L | U | 05/28/90 |
| | Acenaphthene | 0.33 | ug/L | U | 05/28/90 |
| | Silver-EP | 0.05 | mg/L | U | 06/11/90 |
| | Anthrcene | 0.33 | ug/L | U | 05/28/90 |
| | Arsenic-EP | 0.01 | mg/L | U | 06/11/90 |
| | Benzo(a)anthacene | 0.33 | ug/L | U | 05/28/90 |
| | Barium-EP | 0.50 | mg/L | U | 06/11/90 |
| | Benzo(a)pyrene | 0.33 | ug/L | U | 05/28/90 |
| | Benzo(b)fluoanthene | 0.33 | ug/L | U | 05/28/90 |
| | Butyl benzyl phthalate | 0.33 | ug/L | U | 05/28/90 |

* U denotes results less than the instrument detection limit.

ADEM CENTRAL LABORATORY

- SAMPLE ANALYSIS REPORT -
06/13/90

To: ALABAMA HIGHWAY DEPARTMENT

JUN 1990
RECEIVED
Adem
Field Office
Montg.

Attn: BUDDY COX

Lab number : 0105300
Sample number : HIWAY
Sample matrix : SOIL

Report Date: 06/13/90

COLLECTION INFORMATION
Date/Time/By: 05/25/90 11:28 COX
Location : DANNELLY ANGB, 2-6-3/5

ADEM CENTRAL LABORATORY
- RESULTS REPORT -

June 13, 1990

| Lab# | Test | Result | Units | DL* | Analdate |
|---|---|---|---|---|---|
| 0105300 | 1,2,4,-Trichlorobenzene | 0.33 | ug/L | U | 05/28/90 |
| | 1,2-Dichlorobenzene | 0.33 | ug/L | U | 05/28/90 |
| | 1,2-Diphenylhydrazine | 0.33 | ug/L | U | 05/28/90 |
| | 1,3-Dichlorobenzene | 0.33 | ug/L | U | 05/28/90 |
| | 1,4-Dichlorobenzene | 0.33 | ug/L | U | 05/28/90 |
| | 2,3,7,8-Tetrachlorodibe | 0.33 | ug/L | U | 05/28/90 |
| | 2,4-Dinitrotoluene | 0.33 | ug/L | U | 05/28/90 |
| | 2,6-Dinitrotoluene | 0.33 | ug/L | U | 05/28/90 |
| | 2-Chloronaphthalene | 0.33 | ug/L | U | 05/28/90 |
| | 3,3'-Dichlorobenzidine | 0.33 | ug/L | U | 05/28/90 |
| | 4-Bromophenyl phenyl eh | 0.33 | ug/L | U | 05/28/90 |
| | 4-Chlorophenyl phenyl e | 0.33 | ug/L | U | 05/28/90 |
| | Acenaphthalene | 0.33 | ug/L | U | 05/28/90 |
| | Acenaphthene | 0.33 | ug/L | U | 05/28/90 |
| | Silver-EP | 0.05 | mg/L | U | 06/11/90 |
| | Anthrcene | 0.33 | ug/L | U | 05/28/90 |
| | Arsenic-EP | 0.01 | mg/L | U | 06/11/90 |
| | Benzo(a)anthacene | 0.33 | ug/L | U | 05/28/90 |
| | Barium-EP | 0.50 | mg/L | U | 06/11/90 |
| | Benzo(a)pyrene | 0.33 | ug/L | U | 05/28/90 |
| | Benzo(b)fluoanthene | 0.33 | ug/L | U | 05/28/90 |
| | Butyl benzyl phthalate | 0.33 | ug/L | U | 05/28/90 |

* U denotes results less than the instrument detection limit.

ADEM CENTRAL LABORATORY
- RESULTS REPORT -

June 13, 1990

| Lab# | Test | Result | Units | DL* | Analdate |
|---|---|---|---|---|---|
| 0105300 | Bis (2-chlororthyl) eth | 0.33 | ug/L | U | 05/28/90 |
| | Bis(2-chloroethoxy)meth | 0.33 | ug/L | U | 05/28/90 |
| | Bis (2-Chloroisopropyl) | 0.33 | ug/L | U | 05/28/90 |
| | Bis(2-ethylhexyl)phthal | 0.33 | ug/L | U | 05/28/90 |
| | Benzo(g,h,i)perylene | 0.33 | ug/L | U | 05/28/90 |
| | Benzidine | 0.33 | ug/L | U | 05/28/90 |
| | Benzo(k)fluoranthene | 0.33 | ug/L | U | 05/28/90 |
| | Cadmium-EP | 0.01 | mg/L | U | 06/11/90 |
| | Chromium-EP | 0.05 | mg/L | U | 06/11/90 |
| | Chrysene | 0.33 | ug/L | U | 05/28/90 |
| | Dibenzo(a,h)anthracene | 0.33 | ug/L | U | 05/28/90 |
| | Dibutyl phthalate | 0.33 | ug/L | U | 05/28/90 |
| | Diethyl phthalate | 0.33 | ug/L | U | 05/28/90 |
| | Dimethylphthalate | 0.33 | ug/L | U | 05/28/90 |
| | Di-n-octyl phthalate | 0.33 | ug/L | U | 05/28/90 |
| | Fluoranthene | 0.33 | ug/L | U | 05/28/90 |
| | Fluorene | 0.33 | ug/L | U | 05/28/90 |
| | Hexachlorobutadiene | 0.33 | ug/L | U | 05/28/90 |
| | Hexachlorobenzene | 0.33 | ug/L | U | 05/28/90 |
| | Hexachlorocyclopentadie | 0.33 | | U | 05/28/90 |
| | Hexachloroethane | 0.33 | ug/L | U | 05/28/90 |
| | Mercury-EP | 0.00 | mg/L | U | 06/11/90 |
| | Isophrone | 0.33 | ug/L | U | 05/28/90 |
| | Indeno(1,2,3-cd)pyrene | 0.33 | ug/L | U | 05/28/90 |
| | Naphthalene | 0.33 | ug/L | U | 05/28/90 |
| | Nitrobenzene | 0.33 | ug/L | U | 05/28/90 |
| | N-nitroso-di-n-propylam | 0.33 | ug/L | U | 05/28/90 |
| | N-nitrosodimethylamine | 0.33 | ug/L | U | 05/28/90 |
| | N-nitrosodiphenylamine | 0.33 | ug/L | U | 05/28/90 |
| | Pyrene | 0.33 | ug/L | U | 05/28/90 |
| | Phenanthrene | 0.33 | ug/L | U | 05/28/90 |
| | Lead-EP | 0.20 | mg/L | U | 06/11/90 |
| | Lead in Soil | 20.0 | ug/g | U | 06/11/90 |
| | Selenium-EP | 0.01 | mg/L | U | 06/11/90 |

* U denotes results less than the instrument detection limit.

STATE OF ALABAMA
DEPARTMENT OF ENVIRONMENTAL MANAGEMENT
MONTGOMERY, ALABAMA

Hi-way

LABORATORY: (X) Montgomery ( ) Mobile ( ) Birmingham

Sample Type:
- Potable Water [ ]
- Surface Water [ ]
- Soil/Sediment [X]
- Wastewater [ ]
- Landfill Leachate [ ]
- Hazardous Wastesite [ ]
- Groundwater [ ]
- Waste (Special Handling) [ ]
- Toxic Extraction [ ]
- Ignitability [ ]
- Corrosivity [ ]
- Reactivity [ ]
- Composite [X]
- Grab [ ]
- Container P [ ]
- G [ ]

Source: Dannelly ANGB US80

Location: 2-6-3/5

( ) Discharge from _____ (Point Source) to _____ (Receiving Water)

Comments _____ Preservative(s) _____

pH _____ D.O. _____ Sp. Cond. _____ Salinity _____ Turb. _____

PARAMETERS

| Date | (mg/l) | Value | Date | (mg/l) | Value | Date | (mg/l) | Value | Date | (mg/l) | Value |
|---|---|---|---|---|---|---|---|---|---|---|---|
| | Acid | | | Phenol | | | Al | | | Mn | |
| | ALK | | | $PO_4$-P | | | Ag | | | Na | |
| | $BOD_5$ | | | ($S^=$) | | | As | | | Ni | |
| | ($Cl^-$) | | | ($SO_4^=$) | | | Ba | | | Pb | |
| | COD | | | TSS | | | Ca | | | Pt | |
| | $CN^-$ | | | TDS | | | Cd | | | Sb | |
| | ($F^-$) | | | TFS | | | $Cr^T$ | | | Se | |
| | Hard | | | TKN | | | $Cr^{+6}$ | | | Zn | |
| | $NH_3$-N | | | TOC | | | Cu | | Other | | |
| | $NO_3$-N | | | TON | | | Fe | | Base Neutrals | | |
| | $NO_2$-N | | | TS | | | Hg | | Pb (Tot+EPT) | | |
| | O & G | | | VSS | | | Mg | | | | |

F. Coli. _____

B. Cox B. E. [illegible] 5/25 11:28
SAMPLE COLLECTED BY (Signature) DATE/TIME

B. Cox B. E. [illegible] 2:00 5/25/90
RELINQUISHED BY (Signature) DATE/TIME

RECEIVED BY (Signature) DATE/TIME

RELINQUISHED BY (Signature) DATE/TIME

RECEIVED BY (Signature) DATE/TIME

RELINQUISHED BY (Signature) DATE/TIME

Leland Oliver 5/25 2:00
RECEIVED IN LAB BY (Signature) DATE/TIME

0105300
LABORATORY I.D. NO.

SEND REPORT TO: Cox (Mat + Test)

0105300

The chromatogram of this sample reveals a pattern of hydrocarbons that matches that found in kerosene.

WEE

ADEM CENTRAL LABORATORY

- SAMPLE ANALYSIS REPORT -
06/13/90

To: ALABAMA HIGHWAY DEPARTMENT

JUN 1990
RECEIVED
Atom
Field Office
Montg.

Attn: BUDDY COX

Lab number : 0105302
Sample number : HIWAY
Sample matrix : SOIL

Report Date: 06/13/90

COLLECTION INFORMATION
Date/Time/By: 05/25/90 9:35 COX
Location : DANNELLY ANGB, 2-1-3/5

ADEM CENTRAL LABORATORY
- RESULTS REPORT -

June 13, 1990

| Lab# | Test | Result | Units | DL* | Analdate |
|---|---|---|---|---|---|
| 0105302 | 1,2,4,-Trichlorobenzene | 0.33 | ug/L | U | 05/28/90 |
| | 1,2-Dichlorobenzene | 0.33 | ug/L | U | 05/28/90 |
| | 1,2-Diphenylhydrazine | 0.33 | ug/L | U | 05/28/90 |
| | 1,3-Dichlorobenzene | 0.33 | ug/L | U | 05/28/90 |
| | 1,4-Dichlorobenzene | 0.33 | ug/L | U | 05/28/90 |
| | 2,3,7,8-Tetrachlorodibe | 0.33 | ug/L | U | 05/28/90 |
| | 2,4-Dinitrotoluene | 0.33 | ug/L | U | 05/28/90 |
| | 2,6-Dinitrotoluene | 0.33 | ug/L | U | 05/28/90 |
| | 2-Chloronaphthalene | 0.33 | ug/L | U | 05/28/90 |
| | 3,3'-Dichlorobenzidine | 0.33 | ug/L | U | 05/28/90 |
| | 4-Bromophenyl phenyl eh | 0.33 | ug/L | U | 05/28/90 |
| | 4-Chlorophenyl phenyl e | 0.33 | ug/L | U | 05/28/90 |
| | Acenaphthalene | 0.33 | ug/L | U | 05/28/90 |
| | Acenaphthene | 0.33 | ug/L | U | 05/28/90 |
| | Silver-EP | 0.05 | mg/L | U | 06/11/90 |
| | Anthrcene | 0.33 | ug/L | U | 05/28/90 |
| | Arsenic-EP | 0.01 | mg/L | U | 06/11/90 |
| | Benzo(a)anthacene | 0.33 | ug/L | U | 05/28/90 |
| | Barium-EP | 0.50 | mg/L | U | 06/11/90 |
| | Benzo(a)pyrene | 0.33 | ug/L | U | 05/28/90 |
| | Benzo(b)fluoanthene | 0.33 | ug/L | U | 05/28/90 |
| | Butyl benzyl phthalate | 0.33 | ug/L | U | 05/28/90 |

* U denotes results less than the instrument detection limit.

STATE OF ALABAMA
DEPARTMENT OF ENVIRONMENTAL MANAGEMENT
MONTGOMERY, ALABAMA

LABORATORY: (X) Montgomery ( ) Mobile ( ) Birmingham

Sample Type:

| | | | | | | | |
|---|---|---|---|---|---|---|---|
| Potable Water | [ ] | Landfill Leachate | [ ] | Toxic Extraction | [X] | Composite | |
| Surface Water | [ ] | Hazardous Wastesite | [ ] | Ignitability | [ ] | Grab | |
| Soil/Sediment | [X] | Groundwater | [ ] | Corrosivity | [ ] | Container | P |
| Wastewater | [ ] | Waste (Special Handling) | [ ] | Reactivity | [ ] | | G |

Source Dennelly ANGB US 80

Location 2-1-315

( ) Discharge from _____ (Point Source) to _____ (Receiving Water)

Comments _____ Preservative(s) _____

pH _____ D.O. _____ Sp. Cond. _____ Salinity _____ Turb. _____

PARAMETERS

| Date | Value (mg/l) | | Date | Value (mg/l) | | Date | Value (mg/l) | | Date | Value (mg/l) | |
|---|---|---|---|---|---|---|---|---|---|---|---|
| | Acid | | | Phenol | | | Al | | | Mn | |
| | ALK | | | $PO_4$-P | | | Ag | | | Na | |
| | $BOD_5$ | | | ($S^=$) | | | As | | | Ni | |
| | ($Cl^-$) | | | ($SO_4^=$) | | | Ba | | | Pb | |
| | COD | | | TSS | | | Ca | | | Pt | |
| | $CN^-$ | | | TDS | | | Cd | | | Sb | |
| | ($F^-$) | | | TFS | | | $Cr^T$ | | | Se | |
| | Hard | | | TKN | | | $Cr^{+6}$ | | | Zn | |
| | $NH_3$-N | | | TOC | | | Cu | | Other | | |
| | $NO_3$-N | | | TON | | | Fe | | Base Neutrals | | |
| | $NO_2$-N | | | TS | | | Hg | | Pb (Tot & EPT | | |
| | O & G | | | VSS | | | Mg | | | | |

F. Coli. _____

| SAMPLE COLLECTED BY (Signature) | DATE/TIME | RELINQUISHED BY (Signature) | DATE/TIME |
|---|---|---|---|
| B. Cox B. E. [illegible] | 9:35 5/25/90 | B. [illegible] B. [illegible] | 2:00 5/25/90 |
| RECEIVED BY (Signature) | DATE/TIME | RELINQUISHED BY (Signature) | DATE/TIME |
| | | | |
| RECEIVED BY (Signature) | DATE/TIME | RELINQUISHED BY (Signature) | DATE/TIME |
| Melvin Oliver | 5/25 2:00 | | |
| RECEIVED IN LAB BY (Signature) | DATE/TIME | LABORATORY I.D. NO. | 0105302 |

SEND REPORT TO: Cox

ADEM Form 69 5/93

TSS = Total Non-Filtrable Residue TS = Total Residue

ADEM CENTRAL LABORATORY

- SAMPLE ANALYSIS REPORT -
06/01/90

To: ALABAMA HIGHWAY DEPARTMENT

JUN 1990
RECEIVED
Adem
Field Office
Mobile

Attn: BUDDY COX

Lab number : 0105298
Sample number : HIWAY
Sample matrix : SOIL

Report Date: 06/01/9

COLLECTION INFORMATION
Date/Time/By: 05/25/90 10:45 COX
Location : DANNELLY ANGB, 2-4-2

ADEM CENTRAL LABORATORY
- RESULTS REPORT -

June 1, 1990

| Lab# | Test | Result | Units | DL* | Analdate |
|---|---|---|---|---|---|
| 0105298 | 1,1,1,2-Tetrachloroetha | 0.0500 | ug/g | U | 05/31/90 |
| | 1,1,1-Trichloroethane | 0.1900 | ug/g | | 05/31/90 |
| | 1,1,2,2-Tetrachloroetha | 0.0500 | ug/g | U | 05/31/90 |
| | 1,1,2Trichloroethane | 0.0500 | ug/g | U | 05/31/90 |
| | 1,1-Dichloroethane | 0.0500 | ug/g | U | 05/31/90 |
| | 1,1-Dichloroethylene | 0.0500 | ug/g | U | 05/31/90 |
| | 1,1-Dichloropropene | 0.0500 | ug/g | U | 05/31/90 |
| | 1,2,3-Trichlorobenzene | 0.0500 | ug/g | U | 05/31/90 |
| | 1,2,3-Trichloropropane | 0.0500 | ug/g | U | 05/31/90 |
| | 1,2,4-Trichlorobenzene | 0.0500 | ug/g | U | 05/31/90 |
| | 1,2,4-Trimethylbenzene | 0.0500 | ug/g | U | 05/31/90 |
| | 1,2-Dicholoethane | 0.0500 | ug/g | U | 05/31/90 |
| | 1,2-Dichloropropane | 0.0500 | ug/g | U | 05/31/90 |
| | 1,3,5-Trimethylbenzene | 0.0500 | ug/g | U | 05/31/90 |
| | 1,3-Dichloropropane | 0.0500 | ug/g | U | 05/31/90 |
| | 1,3-Dichloropropene | 0.0500 | ug/g | U | 05/31/90 |
| | 2,2-Dichloropropane | 0.0500 | ug/g | U | 05/31/90 |
| | Tetrachloroethylene | 0.0500 | ug/g | U | 05/31/90 |
| | Bromobenzene | 0.0500 | ug/g | U | 05/31/90 |
| | Bromochloromethane | 0.0500 | ug/g | U | 05/31/90 |
| | Bromodichloromethane | 0.0500 | ug/g | U | 05/31/90 |
| | Benzene | 0.0500 | ug/g | U | 05/31/90 |

* U denotes results less than the instrument detection limit.

ADEM CENTRAL LABORATORY
- RESULTS REPORT -

June 1, 1990

| Lab# | Test | Result | Units | DL* | Analdate |
|---|---|---|---|---|---|
| 0105298 | Bromomethane | 0.0500 | ug/g | U | 05/31/90 |
| | cis-1,2-Dichloroethylen | 0.0500 | ug/g | U | 05/31/90 |
| | Chlorobenzene | 0.0500 | ug/g | U | 05/31/90 |
| | Chlorodibromomethane | 0.0500 | ug/g | U | 05/31/90 |
| | Chloroethane | 0.0500 | ug/g | U | 05/31/90 |
| | Bromoform | 0.0500 | ug/g | U | 05/31/90 |
| | Chloroform | 0.0500 | ug/g | U | 05/31/90 |
| | Chloromethane | 0.0500 | ug/g | U | 05/31/90 |
| | Carbon Tetrachloride | 0.0500 | ug/g | U | 05/31/90 |
| | Dibromomethane | 0.0500 | ug/g | U | 05/31/90 |
| | Dichlorofluoromethane | 0.0500 | ug/g | U | 05/31/90 |
| | Dichloromethane | 0.0500 | ug/g | U | 05/31/90 |
| | Ethylbenzene | 0.0500 | ug/g | U | 05/31/90 |
| | Fluorotrichloromethane | 0.0500 | ug/g | U | 05/31/90 |
| | Hexachlorobenzene | 0.0500 | ug/g | U | 05/31/90 |
| | Isopropylbenzene | 0.0500 | ug/g | U | 05/31/90 |
| | m-Dichlorobenzene | 0.0500 | ug/g | U | 05/31/90 |
| | m-Xylene | 0.0500 | ug/g | U | 05/31/90 |
| | Naphthalene | 0.0500 | ug/g | U | 05/31/90 |
| | n-Butylbenzene | 0.0500 | ug/g | U | 05/31/90 |
| | n-Propylbenzene | 0.0500 | ug/g | U | 05/31/90 |
| | o-Chlorotoluene | 0.0500 | ug/g | U | 05/31/90 |
| | o-Dichlorobenzene | 0.0500 | ug/g | U | 05/31/90 |
| | o-Xylene | 0.0500 | ug/g | U | 05/31/90 |
| | p-Chlorotoluene | 0.0500 | ug/g | U | 05/31/90 |
| | p-Dichlorobenzene | 0.0500 | ug/g | U | 05/31/90 |
| | p-Isopropyltoluene | 0.0500 | ug/g | U | 05/31/90 |
| | p-Xylene | 0.0500 | ug/g | U | 05/31/90 |
| | Secbutylbenzene | 0.0500 | ug/g | U | 05/31/90 |
| | Styrene | 0.0500 | ug/g | U | 05/31/90 |
| | t-1.2Dichloroethane | 0.0500 | ug/g | U | 05/31/90 |
| | Tertbutylbenzene | 0.0500 | ug/g | U | 05/31/90 |
| | Trichloroethylene | 0.0500 | ug/g | U | 05/31/90 |
| | Toluene | 0.0500 | ug/g | U | 05/31/90 |
| | Vinyl Chloride | 0.0500 | ug/g | U | 05/31/90 |

* U denotes results less than the instrument detection limit.

STATE OF ALABAMA
DEPARTMENT OF ENVIRONMENTAL MANAGEMENT
MONTGOMERY, ALABAMA

LABORATORY: (X) Montgomery ( ) Mobile ( ) Birmingham

Sample Type:

| | | | | | | | |
|---|---|---|---|---|---|---|---|
| Potable Water | [ ] | Landfill Leachate | [ ] | Toxic Extraction | [ ] | Composite | |
| Surface Water | [ ] | Hazardous Wastesite | [ ] | Ignitability | [ ] | Grab | |
| Soil/Sediment | [X] | Groundwater | [ ] | Corrosivity | [ ] | Container | P |
| Wastewater | [ ] | Waste (Special Handling) | [ ] | Reactivity | [ ] | | G |

Source Dannelly ANGB US80

Location 2-4-2

( ) Discharge from _____ (Point Source) to _____ (Receiving Water)

Comments _____ Preservative(s) _____

pH _____ D.O. _____ Sp. Cond. _____ Salinity _____ Turb. _____

PARAMETERS

| Date | | Value (mg/l) | Date | | Value (mg/l) | Date | | Value (mg/l) | Date | | Value (mg/l) |
|---|---|---|---|---|---|---|---|---|---|---|---|
| | Acid | | | Phenol | | | Al | | | Mn | |
| | ALK | | | $PO_4$-P | | | Ag | | | Na | |
| | $BOD_5$ | | | ($S^=$) | | | As | | | Ni | |
| | ($Cl^-$) | | | ($SO_4^=$) | | | Ba | | | Pb | |
| | COD | | | TSS | | | Ca | | | Pt | |
| | $CN^-$ | | | TDS | | | Cd | | | Sb | |
| | ($F^-$) | | | TFS | | | $Cr^T$ | | | Se | |
| | Hard | | | TKN | | | $Cr^{+6}$ | | | Zn | |
| | $NH_3$-N | | | TOC | | | Cu | | Other | | |
| | $NO_3$-N | | | TON | | | Fe | | BTEX Vol | | |
| | $NO_2$-N | | | TS | | | Hg | | | | |
| | O & G | | | VSS | | | Mg | | | | |

F. Coli. _____

| SAMPLE COLLECTED BY | (Signature) | DATE/TIME | RELINQUISHED BY | (Signature) | DATE/TIME |
|---|---|---|---|---|---|
| B. Eck | B. E. Eck | 10:45 5/25/90 | B. E. Eck | B. E. Eck | 2:00 5/25/9 |

| RECEIVED BY | (Signature) | DATE/TIME | RELINQUISHED BY | (Signature) | DATE/TIME |
|---|---|---|---|---|---|
| | | | | | |

| RECEIVED BY | (Signature) | DATE/TIME | RELINQUISHED BY | (Signature) | DATE/TIME |
|---|---|---|---|---|---|
| D. Olmer | | 5/25 2:00 | | | |

| RECEIVED IN LAB BY | (Signature) | DATE/TIME | LABORATORY I.D. NO. |
|---|---|---|---|
| | | | 0105298 |

SEND REPORT TO: Cox (Maf + Tcsf)

ADEM Form 68 5/82

TSS = Total Non-Filtrable Residue TS = Total Residue

- SAMPLE ANALYSIS REPORT -
05/31/90

To: ALABAMA HIGHWAY DEPARTMENT

JUN 1990
RECEIVED
Field Office

Attn: BUDDY COX

Lab number : 0105294
Sample number : HIWAY
Sample matrix : WATER

Report Date: 05/31/90

COLLECTION INFORMATION
Date/Time/By: 05/25/90 11:25 COX
Location : DANNELLY ANGB, 2-3-4

ADEM CENTRAL LABORATORY
- RESULTS REPORT -

May 31, 1990

| Lab# | Test | Result | Units | DL* | Analdate |
|---|---|---|---|---|---|
| 0105294 | 1,1,1,2-Tetrachloroetha | 10.0000 | ug/L | U | 05/28/90 |
| | 1,1,1-Trichloroethane | 469.7000 | ug/L | | 05/28/90 |
| | 1,1,2,2-Tetrachloroetha | 10.0000 | ug/L | U | 05/28/90 |
| | 1,1,2Trichloroethane | 10.0000 | ug/L | U | 05/28/90 |
| | 1,1-Dichloroethane | 10.0000 | ug/L | U | 05/28/90 |
| | 1,1-Dichloroethylene | 10.0000 | ug/L | U | 05/28/90 |
| | 1,1-Dichloropropene | 10.0000 | ug/L | U | 05/28/90 |
| | 1,2,3-Trichlorobenzene | 10.0000 | ug/L | U | 05/28/90 |
| | 1,2,3-Trichloropropane | 10.0000 | ug/L | U | 05/28/90 |
| | 1,2,4-Trichlorobenzene | 10.0000 | ug/L | U | 05/28/90 |
| | 1,2,4-Trimethylbenzene | 10.0000 | ug/L | U | 05/28/90 |
| | 1,2-Dicholoethane | 10.0000 | ug/L | U | 05/28/90 |
| | 1,2-Dichloropropane | 10.0000 | ug/L | U | 05/28/90 |
| | 1,3,5-Trimethylbenzene | 10.0000 | ug/L | U | 05/28/90 |
| | 1,3-Dichloropropane | 10.0000 | ug/L | U | 05/28/90 |
| | 1,3-Dichloropropene | 10.0000 | ug/L | U | 05/28/90 |
| | 2,2-Dichloropropane | 10.0000 | ug/L | U | 05/28/90 |
| | Tetrachloroethylene | 10.0000 | ug/L | U | 05/28/90 |
| | Bromobenzene | 10.0000 | ug/L | U | 05/28/90 |
| | Bromochloromethane | 10.0000 | ug/L | U | 05/28/90 |
| | Bromodichloromethane | 10.0000 | ug/L | U | 05/28/90 |
| | Benzene | 10.0000 | ug/L | U | 05/28/90 |

* U denotes results less than the instrument detection limit.

* U denotes results less than the instrument detection limit.

STATE OF ALABAMA
DEPARTMENT OF ENVIRONMENTAL MANAGEMENT
MONTGOMERY, ALABAMA

LABORATORY: (X) Montgomery ( ) Mobile ( ) Birmingham

Sample Type:

| | | | | | | | |
|---|---|---|---|---|---|---|---|
| Potable Water | [ ] | Landfill Leachate | [ ] | Toxic Extraction | [ ] | Composite | |
| Surface Water | [X] | Hazardous Wastesite | [ ] | Ignitability | [ ] | Grab | |
| Soil/Sediment | [ ] | Groundwater | [ ] | Corrosivity | [ ] | Container | P |
| Wastewater | [ ] | Waste (Special Handling) | [ ] | Reactivity | [ ] | | G |

Source Dannelly ANGB US 80

Location 2-3-4 BTEX - Water

( ) Discharge from _____ (Point Source) to _____ (Receiving Water)

Comments Strong kerosene odor - Kerosene on hands when finished. Preservative(s) _____

pH _____ D.O. _____ Sp. Cond. _____ Salinity _____ Turb. _____

PARAMETERS

| Date | (mg/l) | Value | Date | (mg/l) | Value | Date | (mg/l) | Value | Date | (mg/l) | Value |
|---|---|---|---|---|---|---|---|---|---|---|---|
| | Acid | | | Phenol | | | Al | | | Mn | |
| | ALK | | | $PO_4$-P | | | Ag | | | Na | |
| | $BOD_5$ | | | ($S^=$) | | | As | | | Ni | |
| | ($Cl^-$) | | | ($SO_4^=$) | | | Ba | | | Pb | |
| | COD | | | TSS | | | Ca | | | Pt | |
| | $CN^-$ | | | TDS | | | Cd | | | Sb | |
| | ($F^-$) | | | TFS | | | $Cr^T$ | | | Se | |
| | Hard | | | TKN | | | $Cr^{+6}$ | | | Zn | |
| | $NH_3$-N | | | TOC | | | Cu | | Other | | |
| | $NO_3$-N | | | TON | | | Fe | | BTEX-Vol | | |
| | $NO_2$-N | | | TS | | | Hg | | | | |
| | O & G | | | VSS | | | Mg | | | | |

F. Coli. _____

| | | | | | |
|---|---|---|---|---|---|
| B. Cox | B. E. [signature] | 11:25 5/25/90 | B. E. [signature] | B. E. [signature] | 2/10 5/25/ |
| SAMPLE COLLECTED BY | (Signature) | DATE/TIME | RELINQUISHED BY | (Signature) | DATE/TIME |
| RECEIVED BY | (Signature) | DATE/TIME | RELINQUISHED BY | (Signature) | DATE/TIME |
| RECEIVED BY | (Signature) | DATE/TIME | RELINQUISHED BY | (Signature) | DATE/TIME |
| [signature] | 5/25 | 2:10 | | 0105294 | |
| RECEIVED IN LAB BY | (Signature) | DATE/TIME | LABORATORY I.D. NO. | | |

SEND REPORT TO: B. Cox (Mat + Test)

ADEM Form 68 5/83

TSS = Total Non-Filtrable Residue
TDS = Total Filtrable Residue
TS = Total Residue
VSS = Volatile Residue

ADEM CENTRAL LABORATORY

- SAMPLE ANALYSIS REPORT -
06/22/90

To: ALABAMA HIGHWAY DEPARTMENT

RECEIVED
Adem
Field Office
Montg.

Attn: BUDDY COX

Lab number : 0105305
Sample number : HIWAY
Sample matrix : SOIL

Report Date: 06/22/90

COLLECTION INFORMATION
Date/Time/By: 05/25/90 11:25 COX
Location : DANNELLY ANGB. 3-1-3/5

ADEM CENTRAL LABORATORY
- RESULTS REPORT - June 22, 1990

| Lab# | Test | Result | Units | DL* | Analdate |
|---|---|---|---|---|---|
| 0105305 | 1,2,4,-Trichlorobenzene | 0.33 | ug/L | U | 05/28/90 |
| | 1,2-Dichlorobenzene | 0.33 | ug/L | U | 05/28/90 |
| | 1,2-Diphenylhydrazine | 0.33 | ug/L | U | 05/28/90 |
| | 1,3-Dichlorobenzene | 0.33 | ug/L | U | 05/28/90 |
| | 1,4-Dichlorobenzene | 0.33 | ug/L | U | 05/28/90 |
| | 2,3,7,8-Tetrachlorodibe | 0.33 | ug/L | U | 05/28/90 |
| | 2,4-Dinitrotoluene | 0.33 | ug/L | U | 05/28/90 |
| | 2,6-Dinitrotoluene | 0.33 | ug/L | U | 05/28/90 |
| | 2-Chloronaphthalene | 0.33 | ug/L | U | 05/28/90 |
| | 3,3'-Dichlorobenzidine | 0.33 | ug/L | U | 05/28/90 |
| | 4-Bromophenyl phenyl eh | 0.33 | ug/L | U | 05/28/90 |
| | 4-Chlorophenyl phenyl e | 0.33 | ug/L | U | 05/28/90 |
| | Acenaphthalene | 0.33 | ug/L | U | 05/28/90 |
| | Acenaphthene | 0.33 | ug/L | U | 05/28/90 |
| | Silver-EP | 0.05 | mg/L | U | 06/13/90 |
| | Anthracene | 0.33 | ug/L | U | 05/28/90 |
| | Arsenic-EP | 0.01 | mg/L | U | 06/13/90 |
| | Benzo(a)anthacene | 0.33 | ug/L | U | 05/28/90 |
| | Barium-EP | 0.50 | mg/L | U | 06/13/90 |
| | Benzo(a)pyrene | 0.33 | ug/L | U | 05/28/90 |
| | Benzo(b)fluoanthene | 0.33 | ug/L | U | 05/28/90 |
| | Butyl benzyl phthalate | 0.33 | ug/L | U | 05/28/90 |

* U denotes results less than the instrument detection limit.

ADEM CENTRAL LABORATORY
- RESULTS REPORT -

June 22, 1990

| Lab# | Test | Result | Units | DL* | Analdate |
|---|---|---|---|---|---|
| 0105305 | Bis (2-chlororthyl) eth | 0.33 | ug/L | U | 05/28/90 |
| | Bis(2-chloroethoxy)meth | 0.33 | ug/L | U | 05/28/90 |
| | Bis (2-Chloroisopropyl) | 0.33 | ug/L | U | 05/28/90 |
| | Bis(2-ethylhexyl)phthal | 8.83 | ug/L | | 05/28/90 |
| | Benzo(g,h,i)perylene | 0.33 | ug/L | U | 05/28/90 |
| | Benzidine | 0.33 | ug/L | U | 05/28/90 |
| | Benzo(k)fluoranthene | 0.33 | ug/L | U | 05/28/90 |
| | Cadmium-EP | 0.01 | mg/L | U | 06/13/90 |
| | Chromium-EP | 0.05 | mg/L | U | 06/13/90 |
| | Chrysene | 0.33 | ug/L | U | 05/28/90 |
| | Dibenzo(a,h)anthracene | 0.33 | ug/L | U | 05/28/90 |
| | Dibutyl phthalate | 0.33 | ug/L | U | 05/28/90 |
| | Diethyl phthalate | 0.33 | ug/L | U | 05/28/90 |
| | Dimethylphthalate | 0.33 | ug/L | U | 05/28/90 |
| | Di-n-octyl phthalate | 0.33 | ug/L | U | 05/28/90 |
| | Fluoranthene | 0.33 | ug/L | U | 05/28/90 |
| | Fluorene | 0.33 | ug/L | U | 05/28/90 |
| | Hexachlorobutadiene | 0.33 | ug/L | U | 05/28/90 |
| | Hexachlorobenzene | 0.33 | ug/L | U | 05/28/90 |
| | Hexachlorocyclopentadie | 0.33 | | U | 05/28/90 |
| | Hexachloroethane | 0.33 | ug/L | U | 05/28/90 |
| | Mercury-EP | 0.00 | mg/L | U | 06/13/90 |
| | Isophrone | 0.33 | ug/L | U | 05/28/90 |
| | Indeno(1,2,3-cd)pyrene | 0.33 | ug/L | U | 05/28/90 |
| | Naphthalene | 0.33 | ug/L | U | 05/28/90 |
| | Nitrobenzene | 0.33 | ug/L | U | 05/28/90 |
| | N-nitroso-di-n-propylam | 0.33 | ug/L | U | 05/28/90 |
| | N-nitrosodimethylamine | 0.33 | ug/L | U | 05/28/90 |
| | N-nitrosodiphenylamine | 0.33 | ug/L | U | 05/28/90 |
| | Pyrene | 0.33 | ug/L | U | 05/28/90 |
| | Phenanthrene | 0.33 | ug/L | U | 05/28/90 |
| | Lead-EP | 0.20 | mg/L | U | 06/13/90 |
| | Lead in Soil | 61.7 | ug/g | | 06/13/90 |
| | Selenium-EP | 0.01 | mg/L | U | 06/13/90 |

* U denotes results less than the instrument detection limit.

STATE OF ALABAMA
DEPARTMENT OF ENVIRONMENTAL MANAGEMENT
MONTGOMERY, ALABAMA

LABORATORY: (X) Montgomery ( ) Mobile ( ) Birmingham

Sample Type: Potable Water [ ] Landfill Leachate [ ] Toxic Extraction [X] Composite
Surface Water [ ] Hazardous Wastesite [ ] Ignitability [ ] Grab
Soil/Sediment [X] Groundwater [ ] Corrosivity [ ] Container P
Wastewater [ ] Waste (Special Handling) [ ] Reactivity [ ] G

Source 3-1-3/5 (Dannelly ANGB-U580)

Location 3-1-3/5

( ) Discharge from _____ (Point Source) to _____ (Receiving Water)

Comments _____ Preservative(s) _____

pH _____ D.O. _____ Sp. Cond. _____ Salinity _____ Turb. _____

PARAMETERS

| Date | Value (mg/l) | | Date | Value (mg/l) | | Date | Value (mg/l) | | Date | Value (mg/l) | |
|---|---|---|---|---|---|---|---|---|---|---|---|
| | Acid | | | Phenol | | | Al | | | Mn | |
| | ALK | | | $PO_4$-P | | | Ag | | | Na | |
| | $BOD_5$ | | | ($S^=$) | | | As | | | Ni | |
| | ($Cl^-$) | | | ($SO_4^=$) | | | Ba | | | Pb | |
| | COD | | | TSS | | | Ca | | | Pt | |
| | $CN^-$ | | | TDS | | | Cd | | | Sb | |
| | ($F^-$) | | | TFS | | | $Cr^T$ | | | Se | |
| | Hard | | | TKN | | | $Cr^{+6}$ | | | Zn | |
| | $NH_3$-N | | | TOC | | | Cu | | Other | | |
| | $NO_3$-N | | | TON | | | Fe | | Base Neutrals | | |
| | $NO_2$-N | | | TS | | | Hg | | Pb (Tot & EP) | | |
| | O & G | | | VSS | | | Mg | | | | |

F. Coli. _____

| SAMPLE COLLECTED BY | (Signature) | DATE/TIME | RELINQUISHED BY | (Signature) | DATE/TIME |
|---|---|---|---|---|---|
| B. Sell | B. Sell | 11:25 5/25/90 | B. Cox | B. Cox | 2:00 5/25/90 |
| RECEIVED BY | (Signature) | DATE/TIME | RELINQUISHED BY | (Signature) | DATE/TIME |
| | | | | | |
| RECEIVED BY | (Signature) | DATE/TIME | RELINQUISHED BY | (Signature) | DATE/TIME |
| | | | | | |
| RECEIVED IN LAB BY | (Signature) | DATE/TIME | LABORATORY I.D. NO. | | |
| Delora Oliver | 5/25 | 2:00 | 0105305 | | |

SEND REPORT TO: Cox (Mat & Test)

TSS = Total Non-Filtrable Residue TS = Total Residue

ADEM CENTRAL LABORATORY

- SAMPLE ANALYSIS REPORT -
06/13/90

To: ALABAMA HIGHWAY DEPARTMENT

JUN 1990
RECEIVED
Adem
Field Office
Montg.

Attn: BUDDY COX

Lab number : 0105301
Sample number : HIWAY
Sample matrix : SOIL

Report Date: 06/13/90

COLLECTION INFORMATION
Date/Time/By: 05/25/90 11:20 COX
Location : DANNELLY ANGB, 3-2-3/5

ADEM CENTRAL LABORATORY
- RESULTS REPORT -

June 13, 1990

| Lab# | Test | Result | Units | DL* | Analdate |
|---|---|---|---|---|---|
| 0105301 | 1,2,4.-Trichlorobenzene | 0.33 | ug/L | U | 05/28/90 |
| | 1,2-Dichlorobenzene | 0.33 | ug/L | U | 05/28/90 |
| | 1,2-Diphenylhydrazine | 0.33 | ug/L | U | 05/28/90 |
| | 1,3-Dichlorobenzene | 0.33 | ug/L | U | 05/28/90 |
| | 1,4-Dichlorobenzene | 0.33 | ug/L | U | 05/28/90 |
| | 2,3,7,8-Tetrachlorodibe | 0.33 | ug/L | U | 05/28/90 |
| | 2,4-Dinitrotoluene | 0.33 | ug/L | U | 05/28/90 |
| | 2,6-Dinitrotoluene | 0.33 | ug/L | U | 05/28/90 |
| | 2-Chloronaphthalene | 0.33 | ug/L | U | 05/28/90 |
| | 3,3'-Dichlorobenzidine | 0.33 | ug/L | U | 05/28/90 |
| | 4-Bromophenyl phenyl eh | 0.33 | ug/L | U | 05/28/90 |
| | 4-Chlorophenyl phenyl e | 0.33 | ug/L | U | 05/28/90 |
| | Acenaphthalene | 0.33 | ug/L | U | 05/28/90 |
| | Acenaphthene | 0.33 | ug/L | U | 05/28/90 |
| | Silver-EP | 0.05 | mg/L | U | 06/11/90 |
| | Anthrcene | 0.33 | ug/L | U | 05/28/90 |
| | Arsenic-EP | 0.01 | mg/L | U | 06/11/90 |
| | Benzo(a)anthacene | 0.33 | ug/L | U | 05/28/90 |
| | Barium-EP | 0.50 | mg/L | U | 06/11/90 |
| | Benzo(a)pyrene | 0.33 | ug/L | U | 05/28/90 |
| | Benzo(b)fluoanthene | 0.33 | ug/L | U | 05/28/90 |
| | Butyl benzyl phthalate | 0.33 | ug/L | U | 05/28/90 |

* U denotes results less than the instrument detection limit.

ADEM CENTRAL LABORATORY
- RESULTS REPORT -

June 13. 1990

| Lab# | Test | Result | Units | DL* | Analdate |
|---|---|---|---|---|---|
| 0105301 | Bis (2-chlororthyl) eth | 0.33 | ug/L | U | 05/28/90 |
| | Bis(2-chloroethoxy)meth | 0.33 | ug/L | U | 05/28/90 |
| | Bis (2-Chloroisopropyl) | 0.33 | ug/L | U | 05/28/90 |
| | Bis(2-ethylhexyl)phthal | 0.33 | ug/L | U | 05/28/90 |
| | Benzo(g,h,i)perylene | 0.33 | ug/L | U | 05/28/90 |
| | Benzidine | 0.33 | ug/L | U | 05/28/90 |
| | Benzo(k)fluoranthene | 0.33 | ug/L | U | 05/28/90 |
| | Cadmium-EP | 0.01 | mg/L | U | 06/11/90 |
| | Chromium-EP | 0.05 | mg/L | U | 06/11/90 |
| | Chrysene | 0.33 | ug/L | U | 05/28/90 |
| | Dibenzo(a,h)anthracene | 0.33 | ug/L | U | 05/28/90 |
| | Dibutyl phthalate | 0.33 | ug/L | U | 05/28/90 |
| | Diethyl phthalate | 0.33 | ug/L | U | 05/28/90 |
| | Dimethylphthalate | 0.33 | ug/L | U | 05/28/90 |
| | Di-n-octyl phthalate | 0.33 | ug/L | U | 05/28/90 |
| | Fluoranthene | 0.33 | ug/L | U | 05/28/90 |
| | Fluorene | 0.33 | ug/L | U | 05/28/90 |
| | Hexachlorobutadiene | 0.33 | ug/L | U | 05/28/90 |
| | Hexachlorobenzene | 0.33 | ug/L | U | 05/28/90 |
| | Hexachlorocyclopentadie | 0.33 | | U | 05/28/90 |
| | Hexachloroethane | 0.33 | ug/L | U | 05/28/90 |
| | Mercury-EP | 0.00 | mg/L | U | 06/11/90 |
| | Isophrone | 0.33 | ug/L | U | 05/28/90 |
| | Indeno(1,2,3-cd)pyrene | 0.33 | ug/L | U | 05/28/90 |
| | Naphthalene | 0.33 | ug/L | U | 05/28/90 |
| | Nitrobenzene | 0.33 | ug/L | U | 05/28/90 |
| | N-nitroso-di-n-propylam | 0.33 | ug/L | U | 05/28/90 |
| | N-nitrosodimethylamine | 0.33 | ug/L | U | 05/28/90 |
| | N-nitrosodiphenylamine | 0.33 | ug/L | U | 05/28/90 |
| | Pyrene | 0.33 | ug/L | U | 05/28/90 |
| | Phenanthrene | 0.33 | ug/L | U | 05/28/90 |
| | Lead-EP | 0.20 | mg/L | U | 06/11/90 |
| | Lead in Soil | 28.0 | ug/g | | 06/11/90 |
| | Selenium-EP | 0.01 | mg/L | U | 06/11/90 |

* U denotes results less than the instrument detection limit.

STATE OF ALABAMA
DEPARTMENT OF ENVIRONMENTAL MANAGEMENT
MONTGOMERY, ALABAMA

LABORATORY: (X) Montgomery ( ) Mobile ( ) Birmingham

Sample Type:

| | | | | | | | |
|---|---|---|---|---|---|---|---|
| Potable Water | [ ] | Landfill Leachate | [ ] | Toxic Extraction | [X] | Composite | |
| Surface Water | [ ] | Hazardous Wastesite | [ ] | Ignitability | [ ] | Grab | |
| Soil/Sediment | [X] | Groundwater | [ ] | Corrosivity | [ ] | Container | P |
| Wastewater | [ ] | Waste (Special Handling) | [ ] | Reactivity | [ ] | | G |

Source Dannelly ANGB US80

Location 3-2-3/5

( ) Discharge from _____ (Point Source) to _____ (Receiving Water)

Comments _____ Preservative(s) _____

pH_____ D.O._____ Sp. Cond._____ Salinity_____ Turb._____

PARAMETERS

| Date | Value (mg/l) | | Date | Value (mg/l) | | Date | Value (mg/l) | | Date | Value (mg/l) | |
|---|---|---|---|---|---|---|---|---|---|---|---|
| | | Acid | | | Phenol | | | Al | | | Mn |
| | | ALK | | | $PO_4$-P | | | Ag | | | Na |
| | | $BOD_5$ | | | ($S^=$) | | | As | | | Ni |
| | | ($Cl^-$) | | | ($SO_4^=$) | | | Ba | | | Pb |
| | | COD | | | TSS | | | Ca | | | Pt |
| | | $CN^-$ | | | TDS | | | Cd | | | Sb |
| | | ($F^-$) | | | TFS | | | $Cr^T$ | | | Se |
| | | Hard | | | TKN | | | $Cr^{+6}$ | | | Zn |
| | | $NH_3$-N | | | TOC | | | Cu | | | Other |
| | | $NO_3$-N | | | TON | | | Fe | | | Box Neutral |
| | | $NO_2$-N | | | TS | | | Hg | | | Pb (Tot+EPT) |
| | | O & G | | | VSS | | | Mg | | | |

F. Coli._____

| | | | | | |
|---|---|---|---|---|---|
| B. Cox | B. S. H. | 11:20 5/25/90 | | B. Cox | 2:00 5/25/90 |
| SAMPLE COLLECTED BY | (Signature) | DATE/TIME | RELINQUISHED BY | (Signature) | DATE/TIME |
| RECEIVED BY | (Signature) | DATE/TIME | RELINQUISHED BY | (Signature) | DATE/TIME |
| RECEIVED BY | (Signature) | DATE/TIME | RELINQUISHED BY | (Signature) | DATE/TIME |
| Debora Olmer | 5/25 2:00 | | 0105301 | | |
| RECEIVED IN LAB BY | (Signature) | DATE/TIME | LABORATORY I.D. NO. | | |

SEND REPORT TO: Cox (Mat. & Test / Highway)

TSS = Total Non-Filtrable Residue TS = Total Residue

ADEM CENTRAL LABORATORY

- SAMPLE ANALYSIS REPORT -
05/31/90

To: ALABAMA HIGHWAY DEPARTMENT

JUN 1990
RECEIVED
Adem
Field Office
Montg

Attn: BUDDY COX

Lab number : 0105293
Sample number : HIWAY
Sample matrix : WATER

Report Date: 05/31/90

COLLECTION INFORMATION
Date/Time/By: 05/25/90 11:50 COX
Location : DANNELLY ANGB, 3-4-4

ADEM CENTRAL LABORATORY
- RESULTS REPORT - May 31, 1990

| Lab# | Test | Result | Units | DL* | Analdate |
|---|---|---|---|---|---|
| 0105293 | 1,1,1,2-Tetrachloroetha | 10.0000 | ug/L | U | 05/28/90 |
| | 1,1,1-Trichloroethane | 10.0000 | ug/L | U | 05/28/90 |
| | 1,1,2,2-Tetrachloroetha | 10.0000 | ug/L | U | 05/28/90 |
| | 1,1,2Trichloroethane | 10.0000 | ug/L | U | 05/28/90 |
| | 1,1-Dichloroethane | 10.0000 | ug/L | U | 05/28/90 |
| | 1,1-Dichloroethylene | 10.0000 | ug/L | U | 05/28/90 |
| | 1,1-Dichloropropene | 10.0000 | ug/L | U | 05/28/90 |
| | 1,2,3-Trichlorobenzene | 10.0000 | ug/L | U | 05/28/90 |
| | 1,2,3-Trichloropropane | 10.0000 | ug/L | U | 05/28/90 |
| | 1,2,4-Trichlorobenzene | 10.0000 | ug/L | U | 05/28/90 |
| | 1,2,4-Trimethylbenzene | 10.0000 | ug/L | U | 05/28/90 |
| | 1,2-Dicholoethane | 10.0000 | ug/L | U | 05/28/90 |
| | 1,2-Dichloropropane | 10.0000 | ug/L | U | 05/28/90 |
| | 1,3,5-Trimethylbenzene | 10.0000 | ug/L | U | 05/28/90 |
| | 1,3-Dichloropropane | 10.0000 | ug/L | U | 05/28/90 |
| | 1,3-Dichloropropene | 10.0000 | ug/L | U | 05/28/90 |
| | 2,2-Dichloropropane | 10.0000 | ug/L | U | 05/28/90 |
| | Tetrachloroethylene | 10.0000 | ug/L | U | 05/28/90 |
| | Bromobenzene | 10.0000 | ug/L | U | 05/28/90 |
| | Bromochloromethane | 10.0000 | ug/L | U | 05/28/90 |
| | Bromodichloromethane | 10.0000 | ug/L | U | 05/28/90 |
| | Benzene | 10.0000 | ug/L | U | 05/28/90 |

* U denotes results less than the instrument detection limit.

ADEM CENTRAL LABORATORY
- RESULTS REPORT -

May 31, 1990

| Lab# | Test | Result | Units | DL* | Analdate |
|---|---|---|---|---|---|
| 0105293 | Bromomethane | 10.0000 | ug/L | U | 05/28/90 |
| | cis-1,2-Dichloroethylen | 10.0000 | ug/L | U | 05/28/90 |
| | Chlorobenzene | 10.0000 | ug/L | U | 05/28/90 |
| | Chlorodibromomethane | 10.0000 | ug/L | U | 05/28/90 |
| | Chloroethane | 10.0000 | ug/L | U | 05/28/90 |
| | Bromoform | 10.0000 | ug/L | U | 05/28/90 |
| | Chloroform | 10.0000 | ug/L | U | 05/28/90 |
| | Chloromethane | 10.0000 | ug/L | U | 05/28/90 |
| | Carbon Tetrachloride | 10.0000 | ug/L | U | 05/28/90 |
| | Dibromomethane | 10.0000 | ug/L | U | 05/28/90 |
| | Dichlorofluoromethane | 10.0000 | ug/L | U | 05/28/90 |
| | Dichloromethane | 10.0000 | ug/L | U | 05/28/90 |
| | Ethylbenzene | 10.0000 | ug/L | U | 05/28/90 |
| | Fluorotrichloromethane | 10.0000 | ug/L | U | 05/28/90 |
| | Hexachlorobenzene | 10.0000 | ug/L | U | 05/28/90 |
| | Isopropylbenzene | 10.0000 | ug/L | U | 05/28/90 |
| | m-Dichlorobenzene | 10.0000 | ug/L | U | 05/28/90 |
| | m-Xylene | 10.0000 | ug/L | U | 05/28/90 |
| | Naphthalene | 10.0000 | ug/L | U | 05/28/90 |
| | n-Butylbenzene | 10.0000 | ug/L | U | 05/28/90 |
| | n-Propylbenzene | 10.0000 | ug/L | U | 05/28/90 |
| | o-Chlorotoluene | 10.0000 | ug/L | U | 05/28/90 |
| | o-Dichlorobenzene | 10.0000 | ug/L | U | 05/28/90 |
| | o-Xylene | 10.0000 | ug/L | U | 05/28/90 |
| | p-Chlorotoluene | 10.0000 | ug/L | U | 05/28/90 |
| | p-Dichlorobenzene | 10.0000 | ug/L | U | 05/28/90 |
| | p-Isopropyltoluene | 10.0000 | ug/L | U | 05/28/90 |
| | p-Xylene | 10.0000 | ug/L | U | 05/28/90 |
| | Secbutylbenzene | 10.0000 | ug/L | U | 05/28/90 |
| | Styrene | 10.0000 | ug/L | U | 05/28/90 |
| | t-1,2Dichloroethane | 10.0000 | ug/L | U | 05/28/90 |
| | Tertbutylbenzene | 10.0000 | ug/L | U | 05/28/90 |
| | Trichloroethylene | 10.0000 | ug/L | U | 05/28/90 |
| | Toluene | 10.0000 | ug/L | U | 05/28/90 |
| | Vinyl Chloride | 10.0000 | ug/L | U | 05/28/90 |

* U denotes results less than the instrument detection limit.

STATE OF ALABAMA
DEPARTMENT OF ENVIRONMENTAL MANAGEMENT
MONTGOMERY, ALABAMA

LABORATORY: (X) Montgomery ( ) Mobile ( ) Birmingham

Sample Type:

| | | | | | | | |
|---|---|---|---|---|---|---|---|
| Potable Water | [ ] | Landfill Leachate | [ ] | Toxic Extraction | [ ] | Composite | |
| Surface Water | [X] | Hazardous Wastesite | [ ] | Ignitability | [ ] | Grab | |
| Soil/Sediment | [ ] | Groundwater | [ ] | Corrosivity | [ ] | Container | P |
| Wastewater | [ ] | Waste (Special Handling) | [ ] | Reactivity | [ ] | | G |

Source Dannell ANGB

Location 3-4-4 Water

( ) Discharge from _____ (Point Source) to _____ (Receiving Water)

Comments _____ Preservative(s) _____

pH _____ D.O. _____ Sp. Cond. _____ Salinity _____ Turb. _____

PARAMETERS

| Date | | Value (mg/l) | Date | | Value (mg/l) | Date | | Value (mg/l) | Date | | Value (mg/l) |
|---|---|---|---|---|---|---|---|---|---|---|---|
| | Acid | | | Phenol | | | Al | | | Mn | |
| | ALK | | | $PO_4$-P | | | Ag | | | Na | |
| | $BOD_5$ | | | ($S^=$) | | | As | | | Ni | |
| | ($Cl^-$) | | | ($SO_4^=$) | | | Ba | | | Pb | |
| | COD | | | TSS | | | Ca | | | Pt | |
| | $CN^-$ | | | TDS | | | Cd | | | Sb | |
| | ($F^-$) | | | TFS | | | $Cr^T$ | | | Se | |
| | Hard | | | TKN | | | $Cr^{+6}$ | | | Zn | |
| | $NH_3$-N | | | TOC | | | Cu | | Other | | |
| | $NO_3$-N | | | TON | | | Fe | | BTEX - vol | | |
| | $NO_2$-N | | | TS | | | Hg | | | | |
| | O & G | | | VSS | | | Mg | | | | |

F. Coli. _____

| SAMPLE COLLECTED BY | (Signature) | DATE/TIME | RELINQUISHED BY | (Signature) | DATE/TIME |
|---|---|---|---|---|---|
| B.E. [illegible] | B.E. [illegible] | 11:30 5/25/90 | | B.E. [illegible] | 2:05 5/25/90 |
| RECEIVED BY | (Signature) | DATE/TIME | RELINQUISHED BY | (Signature) | DATE/TIME |
| | | | | | |
| RECEIVED BY | (Signature) | DATE/TIME | RELINQUISHED BY | (Signature) | DATE/TIME |
| | | | | | |
| RECEIVED IN LAB BY | (Signature) | DATE/TIME | LABORATORY I.D. NO. | | |
| Helen Odum | 5/25 | 2:05 | 0105293 | | |

SEND REPORT TO: Buddy Cox Materials & Test

ADEM Form 68 5/83

TSS - Total Non-Filtrable Residue TS - Total Residue
TDS - Total Filtrable Residue

ADEM CENTRAL LABORATORY

- SAMPLE ANALYSIS REPORT -
05/31/90

To: ALABAMA HIGHWAY DEPARTMENT

JUN 1990
RECEIVED
Adem
Field Office
Mobile

Attn: BUDDY COX

Lab number : 0105295
Sample number : HIWAY
Sample matrix : SOIL

Report Date: 05/31/9

COLLECTION INFORMATION
Date/Time/By: 05/25/90 11:50 COX
Location : DANNELLY ANGB, 3-3-2

ADEM CENTRAL LABORATORY
- RESULTS REPORT -

May 31, 1990

| Lab# | Test | Result | Units | DL* | Analdate |
|---|---|---|---|---|---|
| 0105295 | 1,1,1,2-Tetrachloroetha | 0.0500 | ug/g | U | 05/29/90 |
| | 1,1,1-Trichloroethane | 0.0500 | ug/g | U | 05/29/90 |
| | 1,1,2,2-Tetrachloroetha | 0.0500 | ug/g | U | 05/29/90 |
| | 1,1,2Trichloroethane | 0.0500 | ug/g | U | 05/29/90 |
| | 1,1-Dichloroethane | 0.0500 | ug/g | U | 05/29/90 |
| | 1,1-Dichloroethylene | 0.0500 | ug/g | U | 05/29/90 |
| | 1,1-Dichloropropene | 0.0500 | ug/g | U | 05/29/90 |
| | 1,2,3-Trichlorobenzene | 0.0500 | ug/g | U | 05/29/90 |
| | 1,2,3-Trichloropropane | 0.0500 | ug/g | U | 05/29/90 |
| | 1,2,4-Trichlorobenzene | 0.0500 | ug/g | U | 05/29/90 |
| | 1,2,4-Trimethylbenzene | 0.0500 | ug/g | U | 05/29/90 |
| | 1,2-Dicholoethane | 0.0500 | ug/g | U | 05/29/90 |
| | 1,2-Dichloropropane | 0.0500 | ug/g | U | 05/29/90 |
| | 1,3,5-Trimethylbenzene | 0.0500 | ug/g | U | 05/29/90 |
| | 1,3-Dichloropropane | 0.0500 | ug/g | U | 05/29/90 |
| | 1,3-Dichloropropene | 0.0500 | ug/g | U | 05/29/90 |
| | 2,2-Dichloropropane | 0.0500 | ug/g | U | 05/29/90 |
| | Tetrachloroethylene | 0.0500 | ug/g | U | 05/29/90 |
| | Bromobenzene | 0.0500 | ug/g | U | 05/29/90 |
| | Bromochloromethane | 0.0500 | ug/g | U | 05/29/90 |
| | Bromodichloromethane | 0.0500 | ug/g | U | 05/29/90 |
| | Benzene | 0.0500 | ug/g | U | 05/29/90 |

* U denotes results less than the instrument detection limit.

ADEM CENTRAL LABORATORY
- RESULTS REPORT -

May 31, 1990

| Lab# | Test | Result | Units | DL* | Analdate |
|---|---|---|---|---|---|
| 0105295 | Bromomethane | 0.0500 | ug/g | U | 05/29/90 |
| | cis-1,2-Dichloroethylen | 0.0500 | ug/g | U | 05/29/90 |
| | Chlorobenzene | 0.0500 | ug/g | U | 05/29/90 |
| | Chlorodibromomethane | 0.0500 | ug/g | U | 05/29/90 |
| | Chloroethane | 0.0500 | ug/g | U | 05/29/90 |
| | Bromoform | 0.0500 | ug/g | U | 05/29/90 |
| | Chloroform | 0.0500 | ug/g | U | 05/29/90 |
| | Chloromethane | 0.0500 | ug/g | U | 05/29/90 |
| | Carbon Tetrachloride | 0.0500 | ug/g | U | 05/29/90 |
| | Dibromomethane | 0.0500 | ug/g | U | 05/29/90 |
| | Dichlorofluoromethane | 0.0500 | ug/g | U | 05/29/90 |
| | Dichloromethane | 0.0500 | ug/g | U | 05/29/90 |
| | Ethylbenzene | 0.0500 | ug/g | U | 05/29/90 |
| | Fluorotrichloromethane | 0.0500 | ug/g | U | 05/29/90 |
| | Hexachlorobenzene | 0.0500 | ug/g | U | 05/29/90 |
| | Isopropylbenzene | 0.0500 | ug/g | U | 05/29/90 |
| | m-Dichlorobenzene | 0.0500 | ug/g | U | 05/29/90 |
| | m-Xylene | 0.0500 | ug/g | U | 05/29/90 |
| | Naphthalene | 0.0500 | ug/g | U | 05/29/90 |
| | n-Butylbenzene | 0.0500 | ug/g | U | 05/29/90 |
| | n-Propylbenzene | 0.0500 | ug/g | U | 05/29/90 |
| | o-Chlorotoluene | 0.0500 | ug/g | U | 05/29/90 |
| | o-Dichlorobenzene | 0.0500 | ug/g | U | 05/29/90 |
| | o-Xylene | 0.0500 | ug/g | U | 05/29/90 |
| | p-Chlorotoluene | 0.0500 | ug/g | U | 05/29/90 |
| | p-Dichlorobenzene | 0.0500 | ug/g | U | 05/29/90 |
| | p-Isopropyltoluene | 0.0500 | ug/g | U | 05/29/90 |
| | p-Xylene | 0.0500 | ug/g | U | 05/29/90 |
| | Secbutylbenzene | 0.0500 | ug/g | U | 05/29/90 |
| | Styrene | 0.0500 | ug/g | U | 05/29/90 |
| | t-1,2Dichloroethane | 0.0500 | ug/g | U | 05/29/90 |
| | Tertbutylbenzene | 0.0500 | ug/g | U | 05/29/90 |
| | Trichloroethylene | 0.0500 | ug/g | U | 05/29/90 |
| | Toluene | 0.0500 | ug/g | U | 05/29/90 |
| | Vinyl Chloride | 0.0500 | ug/g | U | 05/29/90 |

* U denotes results less than the instrument detection limit.

STATE OF ALABAMA
DEPARTMENT OF ENVIRONMENTAL MANAGEMENT
MONTGOMERY, ALABAMA

Hi-Way

LABORATORY: (X) Montgomery ( ) Mobile ( ) Birmingham

Sample Type:

| | | | | | | | |
|---|---|---|---|---|---|---|---|
| Potable Water | [ ] | Landfill Leachate | [ ] | Toxic Extraction | [ ] | Composite | |
| Surface Water | [ ] | Hazardous Wastesite | [ ] | Ignitability | [ ] | Grab | |
| Soil/Sediment | [X] | Groundwater | [ ] | Corrosivity | [ ] | Container | P |
| Wastewater | [ ] | Waste (Special Handling) | [ ] | Reactivity | [ ] | | G |

Source Danvelly ANGB US80

Location 3-3-2

( ) Discharge from _____ (Point Source) to _____ (Receiving Water)

Comments _____ Preservative(s) _____

pH _____ D.O. _____ Sp. Cond. _____ Salinity _____ Turb. _____

PARAMETERS

| Date | (mg/l) | Value | Date | (mg/l) | Value | Date | (mg/l) | Value | Date | (mg/l) | Value |
|---|---|---|---|---|---|---|---|---|---|---|---|
| | Acid | | | Phenol | | | Al | | | Mn | |
| | ALK | | | $PO_4$-P | | | Ag | | | Na | |
| | $BOD_5$ | | | ($S^=$) | | | As | | | Ni | |
| | ($Cl^-$) | | | ($SO_4^=$) | | | Ba | | | Pb | |
| | COD | | | TSS | | | Ca | | | Pt | |
| | $CN^-$ | | | TDS | | | Cd | | | Sb | |
| | ($F^-$) | | | TFS | | | $Cr^T$ | | | Se | |
| | Hard | | | TKN | | | $Cr^{+6}$ | | | Zn | |
| | $NH_3$-N | | | TOC | | | Cu | | Other | | |
| | $NO_3$-N | | | TON | | | Fe | | BTEX Vol | | |
| | $NO_2$-N | | | TS | | | Hg | | | | |
| | O & G | | | VSS | | | Mg | | | | |

F. Coli. _____

| | | | | | |
|---|---|---|---|---|---|
| B. Cox | B. E. [illegible] | 11:50 5/25/90 | B. Gx | B. Gx | 2:00 5/25/90 |
| SAMPLE COLLECTED BY | (Signature) | DATE/TIME | RELINQUISHED BY | (Signature) | DATE/TIME |
| | | | | | |
| RECEIVED BY | (Signature) | DATE/TIME | RELINQUISHED BY | (Signature) | DATE/TIME |
| | | | | | |
| RECEIVED BY | (Signature) | DATE/TIME | RELINQUISHED BY | (Signature) | DATE/TIME |
| D. Oliver | 5/25 | 2:00 | | 0105295 | |
| RECEIVED IN LAB BY | (Signature) | DATE/TIME | LABORATORY I.D. NO. | | |

SEND REPORT TO: Cox (Mat + Test)

ADEM Form 68 5/83

TSS = Total Non-Filtrable Residue
TDS = Total Filtrable Residue
TS = Total Residue
VSS = Volatile Residue

ADEM CENTRAL LABORATORY

- SAMPLE ANALYSIS REPORT -
06/22/90

To: ALABAMA HIGHWAY DEPARTMENT

RECEIVED
Adem
Field Office
Montg.

Attn: BUDDY COX

Lab number : 0105304
Sample number : HIWAY
Sample matrix : SOIL

Report Date: 06/22/90

COLLECTION INFORMATION
Date/Time/By: 05/25/90 12:15 COX
Location : DANNELLY ANGB. 4-1-3/5

ADEM CENTRAL LABORATORY
- RESULTS REPORT June 22, 1990

| Lab# | Test | Result | Units | DL* | Analdate |
|---|---|---|---|---|---|
| 0105304 | 1,2,4,-Trichlorobenzene | 0.33 | ug/L | U | 05/28/90 |
| | 1,2-Dichlorobenzene | 0.33 | ug/L | U | 05/28/90 |
| | 1,2-Diphenylhydrazine | 0.33 | ug/L | U | 05/28/90 |
| | 1,3-Dichlorobenzene | 0.33 | ug/L | U | 05/28/90 |
| | 1,4-Dichlorobenzene | 0.33 | ug/L | U | 05/28/90 |
| | 2,3,7,8-Tetrachlorodibe | 0.33 | ug/L | U | 05/28/90 |
| | 2,4-Dinitrotoluene | 0.33 | ug/L | U | 05/28/90 |
| | 2,6-Dinitrotoluene | 0.33 | ug/L | U | 05/28/90 |
| | 2-Chloronaphthalene | 0.33 | ug/L | U | 05/28/90 |
| | 3,3'-Dichlorobenzidine | 0.33 | ug/L | U | 05/28/90 |
| | 4-Bromophenyl phenyl eh | 0.33 | ug/L | U | 05/28/90 |
| | 4-Chlorophenyl phenyl e | 0.33 | ug/L | U | 05/28/90 |
| | Acenaphthalene | 0.33 | ug/L | U | 05/28/90 |
| | Acenaphthene | 0.33 | ug/L | U | 05/28/90 |
| | Silver-EP | 0.05 | mg/L | U | 06/13/90 |
| | Anthracene | 0.33 | ug/L | U | 05/28/90 |
| | Arsenic-EP | 0.01 | mg/L | U | 06/13/90 |
| | Benzo(a)anthacene | 0.33 | ug/L | U | 05/28/90 |
| | Barium-EP | 0.50 | mg/L | U | 06/13/90 |
| | Benzo(a)pyrene | 0.33 | ug/L | U | 05/28/90 |
| | Benzo(b)fluoanthene | 0.33 | ug/L | U | 05/28/90 |
| | Butyl benzyl phthalate | 0.33 | ug/L | U | 05/28/90 |

* U denotes results less than the instrument detection limit.

ADEM CENTRAL LABORATORY
- RESULTS REPORT -

June 22, 1990

| Lab# | Test | Result | Units | DL* | Analdate |
|---|---|---|---|---|---|
| 0105304 | Bis (2-chlororthyl) eth | 0.33 | ug/L | U | 05/28/90 |
| | Bis(2-chloroethoxy)meth | 0.33 | ug/L | U | 05/28/90 |
| | Bis (2-Chloroisopropyl) | 0.33 | ug/L | U | 05/28/90 |
| | Bis(2-ethylhexyl)phthal | 0.33 | ug/L | U | 05/28/90 |
| | Benzo(g,h,i)perylene | 0.33 | ug/L | U | 05/28/90 |
| | Benzidine | 0.33 | ug/L | U | 05/28/90 |
| | Benzo(k)fluoranthene | 0.33 | ug/L | U | 05/28/90 |
| | Cadmium-EP | 0.01 | mg/L | U | 06/13/90 |
| | Chromium-EP | 0.05 | mg/L | U | 06/13/90 |
| | Chrysene | 0.33 | ug/L | U | 05/28/90 |
| | Dibenzo(a,h)anthracene | 0.33 | ug/L | U | 05/28/90 |
| | Dibutyl phthalate | 0.33 | ug/L | U | 05/28/90 |
| | Diethyl phthalate | 0.33 | ug/L | U | 05/28/90 |
| | Dimethylphthalate | 0.33 | ug/L | U | 05/28/90 |
| | Di-n-octyl phthalate | 0.33 | ug/L | U | 05/28/90 |
| | Fluoranthene | 0.33 | ug/L | U | 05/28/90 |
| | Fluorene | 0.33 | ug/L | U | 05/28/90 |
| | Hexachlorobutadiene | 0.33 | ug/L | U | 05/28/90 |
| | Hexachlorobenzene | 0.33 | ug/L | U | 05/28/90 |
| | Hexachlorocyclopentadie | 0.33 | | U | 05/28/90 |
| | Hexachloroethane | 0.33 | ug/L | U | 05/28/90 |
| | Mercury-EP | 0.00 | mg/L | U | 06/13/90 |
| | Isophrone | 0.33 | ug/L | U | 05/28/90 |
| | Indeno(1,2,3-cd)pyrene | 0.33 | ug/L | U | 05/28/90 |
| | Naphthalene | 0.33 | ug/L | U | 05/28/90 |
| | Nitrobenzene | 0.33 | ug/L | U | 05/28/90 |
| | N nitroso-di n propylam | 0.33 | ug/L | U | 05/28/90 |
| | N-nitrosodimethylamine | 0.33 | ug/L | U | 05/28/90 |
| | N-nitrosodiphenylamine | 0.33 | ug/L | U | 05/28/90 |
| | Pyrene | 0.33 | ug/L | U | 05/28/90 |
| | Phenanthrene | 0.33 | ug/L | U | 05/28/90 |
| | Lead-EP | 0.20 | mg/L | U | 06/13/90 |
| | Lead in Soil | 23.7 | ug/g | | 06/13/90 |
| | Selenium-EP | 0.01 | mg/L | U | 06/13/90 |

* U denotes results less than the instrument detection limit.

Hiway

STATE OF ALABAMA
DEPARTMENT OF ENVIRONMENTAL MANAGEMENT
MONTGOMERY, ALABAMA

LABORATORY: (X) Montgomery ( ) Mobile ( ) Birmingham

Sample Type:

| | | | | | | | |
|---|---|---|---|---|---|---|---|
| Potable Water | [ ] | Landfill Leachate | [ ] | Toxic Extraction | [X] | Composite | |
| Surface Water | [ ] | Hazardous Wastesite | [ ] | Ignitability | [ ] | Grab | |
| Soil/Sediment | [X] | Groundwater | [ ] | Corrosivity | [ ] | Container | P |
| Wastewater | [ ] | Waste (Special Handling) | [ ] | Reactivity | [ ] | | G |

Source Dannelly ANGB - Fence Line

Location 4-1-3/5

( ) Discharge from _____ (Point Source) to _____ (Receiving Water)

Comments _____ Preservative(s) _____

pH _____ D.O. _____ Sp. Cond. _____ Salinity _____ Turb. _____

PARAMETERS

| Date | Value (mg/l) | | Date | Value (mg/l) | | Date | Value (mg/l) | | Date | Value (mg/l) | |
|---|---|---|---|---|---|---|---|---|---|---|---|
| | Acid | | | Phenol | | | Al | | | Mn | |
| | ALK | | | $PO_4$-P | | | Ag | | | Na | |
| | $BOD_5$ | | | ($S^=$) | | | As | | | Ni | |
| | ($Cl^-$) | | | ($SO_4^=$) | | | Ba | | | Pb | |
| | COD | | | TSS | | | Ca | | | Pt | |
| | $CN^-$ | | | TDS | | | Cd | | | Sb | |
| | ($F^-$) | | | TFS | | | $Cr^T$ | | | Se | |
| | Hard | | | TKN | | | $Cr^{+6}$ | | | Zn | |
| | $NH_3$-N | | | TOC | | | Cu | | Other | | |
| | $NO_3$-N | | | TON | | | Fe | | Base Neutrals | | |
| | $NO_2$-N | | | TS | | | Hg | | Lead (Tot + EP) | | |
| | O & G | | | VSS | | | Mg | | | | |

F. Coli. _____

| SAMPLE COLLECTED BY | (Signature) | DATE/TIME | RELINQUISHED BY | (Signature) | DATE/TIME |
|---|---|---|---|---|---|
| B.E. Cox Jr | B.E.C. | 5/25/90 1215 | | B.E.C. | 5/25/90 2:00 p.m. |

| RECEIVED BY | (Signature) | DATE/TIME | RELINQUISHED BY | (Signature) | DATE/TIME |
|---|---|---|---|---|---|
| | | | | | |

| RECEIVED BY | (Signature) | DATE/TIME | RELINQUISHED BY | (Signature) | DATE/TIME |
|---|---|---|---|---|---|
| | | | | | |

| RECEIVED IN LAB BY | (Signature) | DATE/TIME | LABORATORY I.D. NO. |
|---|---|---|---|
| H. Olmer | 5/25 | 2:00 | 0105304 |

SEND REPORT TO: Cox (Mat + Test) 242-6257

ADEM Form 68 5/83

TSS - Total Non-Filtrable Residue TS - Total Residue

ADEM CENTRAL LABORATORY

- SAMPLE ANALYSIS REPORT -
06/22/90

To: ALABAMA HIGHWAY DEPARTMENT

JUN 1990
RECEIVED
Adem
Field Office
Montg.

Attn: BUDDY COX

Lab number : 0105306
Sample number : HIWAY
Sample matrix : SOIL

Report Date: 06/22/9

COLLECTION INFORMATION
Date/Time/By: 05/25/90 12:40 COX
Location : DANNELLY ANGB, 4-3-3/5

ADEM CENTRAL LABORATORY
- RESULTS REPORT - June 22, 1990

| Lab# | Test | Result | Units | DL* | Analdate |
|---|---|---|---|---|---|
| 0105306 | 1,2,4,-Trichlorobenzene | 0.33 | ug/L | U | 05/28/90 |
| | 1,2-Dichlorobenzene | 0.33 | ug/L | U | 05/28/90 |
| | 1,2-Diphenylhydrazine | 0.33 | ug/L | U | 05/28/90 |
| | 1,3-Dichlorobenzene | 0.33 | ug/L | U | 05/28/90 |
| | 1,4-Dichlorobenzene | 0.33 | ug/L | U | 05/28/90 |
| | 2,3,7,8-Tetrachlorodibe | 0.33 | ug/L | U | 05/28/90 |
| | 2,4-Dinitrotoluene | 0.33 | ug/L | U | 05/28/90 |
| | 2,6-Dinitrotoluene | 0.33 | ug/L | U | 05/28/90 |
| | 2-Chloronaphthalene | 0.33 | ug/L | U | 05/28/90 |
| | 3,3'-Dichlorobenzidine | 0.33 | ug/L | U | 05/28/90 |
| | 4-Bromophenyl phenyl eth | 0.33 | ug/L | U | 05/28/90 |
| | 4-Chlorophenyl phenyl e | 0.33 | ug/L | U | 05/28/90 |
| | Acenaphthalene | 0.33 | ug/L | U | 05/28/90 |
| | Acenaphthene | 0.33 | ug/L | U | 05/28/90 |
| | Silver-EP | 0.05 | mg/L | U | 06/13/90 |
| | Anthrcene | 0.33 | ug/L | U | 05/28/90 |
| | Arsenic-EP | 0.01 | mg/L | U | 06/13/90 |
| | Benzo(a)anthacene | 1.93 | ug/L | | 05/28/90 |
| | Barium-EP | 0.50 | mg/L | U | 06/13/90 |
| | Benzo(a)pyrene | 2.10 | ug/L | | 05/28/90 |
| | Benzo(b)fluoanthene | 0.33 | ug/L | U | 05/28/90 |
| | Butyl benzyl phthalate | 0.33 | ug/L | U | 05/28/90 |

* U denotes results less than the instrument detection limit.

ADEM CENTRAL LABORATORY
- RESULTS REPORT -

June 22, 1990

| Lab# | Test | Result | Units | DL* | Analdate |
|---|---|---|---|---|---|
| 0105306 | Bis (2-chlororthyl) eth | 0.33 | ug/L | U | 05/28/90 |
| | Bis(2-chloroethoxy)meth | 0.33 | ug/L | U | 05/28/90 |
| | Bis (2-Chloroisopropyl) | 0.33 | ug/L | U | 05/28/90 |
| | Bis(2-ethylhexyl)phthal | 24.40 | ug/g | | 05/28/90 |
| | Benzo(g,h,i)perylene | 0.33 | ug/L | U | 05/28/90 |
| | Benzidine | 0.33 | ug/L | U | 05/28/90 |
| | Benzo(k)fluoranthene | 0.33 | ug/L | U | 05/28/90 |
| | Cadmium-EP | 0.01 | mg/L | U | 06/13/90 |
| | Chromium-EP | 0.05 | mg/L | U | 06/13/90 |
| | Chrysene | 4.03 | ug/g | | 05/28/90 |
| | Dibenzo(a,h)anthracene | 0.33 | ug/L | U | 05/28/90 |
| | Dibutyl phthalate | 0.33 | ug/L | U | 05/28/90 |
| | Diethyl phthalate | 0.33 | ug/L | U | 05/28/90 |
| | Dimethylphthalate | 0.33 | ug/L | U | 05/28/90 |
| | Di-n-octyl phthalate | 0.33 | ug/L | U | 05/28/90 |
| | Fluoranthene | 3.53 | ug/L | | 05/28/90 |
| | Fluorene | 0.33 | ug/L | U | 05/28/90 |
| | Hexachlorobutadiene | 0.33 | ug/L | U | 05/28/90 |
| | Hexachlorobenzene | 0.33 | ug/L | U | 05/28/90 |
| | Hexachlorocyclopentadie | 0.33 | | U | 05/28/90 |
| | Hexachloroethane | 0.33 | ug/L | U | 05/28/90 |
| | Mercury-EP | 0.00 | mg/L | U | 06/13/90 |
| | Isophrone | 0.33 | ug/L | U | 05/28/90 |
| | Indeno(1,2,3-cd)pyrene | 0.33 | ug/L | U | 05/28/90 |
| | Naphthalene | 0.33 | ug/L | U | 05/28/90 |
| | Nitrobenzene | 0.33 | ug/L | U | 05/28/90 |
| | N-nitroso-di-n-propylam | 0.33 | ug/L | U | 05/28/90 |
| | N-nitrosodimethylamine | 0.33 | ug/L | U | 05/28/90 |
| | N-nitrosodiphenylamine | 0.33 | ug/L | U | 05/28/90 |
| | Pyrene | 2.76 | ug/g | | 05/28/90 |
| | Phenanthrene | 2.66 | ug/g | | 05/28/90 |
| | Lead-EP | 0.20 | mg/L | U | 06/13/90 |
| | Lead in Soil | 25.1 | ug/g | | 06/13/90 |
| | Selenium-EP | 0.01 | mg/L | U | 06/13/90 |

* U denotes results less than the instrument detection limit.

STATE OF ALABAMA
DEPARTMENT OF ENVIRONMENTAL MANAGEMENT
MONTGOMERY, ALABAMA

LABORATORY: (X) Montgomery ( ) Mobile ( ) Birmingham

Sample Type:

| | | | | | | | |
|---|---|---|---|---|---|---|---|
| Potable Water | [ ] | Landfill Leachate | [ ] | Toxic Extraction | [X] | Composite | |
| Surface Water | [ ] | Hazardous Wastesite | [ ] | Ignitability | [ ] | Grab | |
| Soil/Sediment | [X] | Groundwater | [ ] | Corrosivity | [ ] | Container | P |
| Wastewater | [ ] | Waste (Special Handling) | [ ] | Reactivity | [ ] | | G |

Source Dannelly ANGB US80

Location 4-3-3/5

( ) Discharge from _____ (Point Source) to _____ (Receiving Water)

Comments _____ Preservative(s) _____

pH _____ D.O. _____ Sp. Cond. _____ Salinity _____ Turb. _____

PARAMETERS

| Date | (mg/l) | Value | Date | (mg/l) | Value | Date | (mg/l) | Value | Date | (mg/l) | Value |
|---|---|---|---|---|---|---|---|---|---|---|---|
| | Acid | | | Phenol | | | Al | | | Mn | |
| | ALK | | | $PO_4$-P | | | Ag | | | Na | |
| | $BOD_5$ | | | ($S^=$) | | | As | | | Ni | |
| | ($Cl^-$) | | | ($SO_4^=$) | | | Ba | | | Pb | |
| | COD | | | TSS | | | Ca | | | Pt | |
| | $CN^-$ | | | TDS | | | Cd | | | Sb | |
| | ($F^-$) | | | TFS | | | $Cr^T$ | | | Se | |
| | Hard | | | TKN | | | $Cr^{+6}$ | | | Zn | |
| | $NH_3$-N | | | TOC | | | Cu | | Other | | |
| | $NO_3$-N | | | TON | | | Fe | | Base Neu. /Pb | | |
| | $NO_2$-N | | | TS | | | Hg | | Totals | | |
| | O & G | | | VSS | | | Mg | | | | |

F. Coli. _____

B. E. [signature] B. E. [signature] 12:40 5/25/90
SAMPLE COLLECTED BY (Signature) DATE/TIME

B. Cox 2:00 5/25/90
RELINQUISHED BY (Signature) DATE/TIME

RECEIVED BY (Signature) DATE/TIME

RELINQUISHED BY (Signature) DATE/TIME

RECEIVED BY (Signature) DATE/TIME

RELINQUISHED BY (Signature) DATE/TIME

Delores Oliver 5/25 2:00
RECEIVED IN LAB BY (Signature) DATE/TIME

0105306
LABORATORY I.D. NO.

SEND REPORT TO: Cox (Mat. & Test)
242-6527

ADEM Form 68 5/83

TSS = Total Non-Filtrable Residue
TDS = Total Filtrable Residue
TS = Total Residue
VSS = Volatile R...

Sample matrix : SOIL

COLLECTION INFORMATION
Date/Time/By: 05/25/90 12:35 COX
Location : DANNELLY ANGB, 4-2-2

ADEM CENTRAL LABORATORY
- RESULTS REPORT -

May 31, 1990

| Lab# | Test | Result | Units | DL* | Analdate |
|---|---|---|---|---|---|
| 0105296 | 1,1,1,2-Tetrachloroetha | 0.0500 | ug/g | U | 05/29/90 |
| | 1,1,1-Trichloroethane | 0.0500 | ug/g | U | 05/29/90 |
| | 1,1,2,2-Tetrachloroetha | 0.0500 | ug/g | U | 05/29/90 |
| | 1,1,2Trichloroethane | 0.0500 | ug/g | U | 05/29/90 |
| | 1,1-Dichloroethane | 0.0500 | ug/g | U | 05/29/90 |
| | 1,1-Dichloroethylene | 0.0500 | ug/g | U | 05/29/90 |
| | 1,1-Dichloropropene | 0.0500 | ug/g | U | 05/29/90 |
| | 1,2,3-Trichlorobenzene | 0.0500 | ug/g | U | 05/29/90 |
| | 1,2,3-Trichloropropane | 0.0500 | ug/g | U | 05/29/90 |
| | 1,2,4-Trichlorobenzene | 0.0500 | ug/g | U | 05/29/90 |
| | 1,2,4-Trimethylbenzene | 0.0500 | ug/g | U | 05/29/90 |
| | 1,2-Dicholoethane | 0.0500 | ug/g | U | 05/29/90 |
| | 1,2-Dichloropropane | 0.0500 | ug/g | U | 05/29/90 |
| | 1,3,5-Trimethylbenzene | 0.0500 | ug/g | U | 05/29/90 |
| | 1,3-Dichloropropane | 0.0500 | ug/g | U | 05/29/90 |
| | 1,3-Dichloropropene | 0.0500 | ug/g | U | 05/29/90 |
| | 2,2-Dichloropropane | 0.0500 | ug/g | U | 05/29/90 |
| | Tetrachloroethylene | 0.0500 | ug/g | U | 05/29/90 |
| | Bromobenzene | 0.0500 | ug/g | U | 05/29/90 |
| | Bromochloromethane | 0.0500 | ug/g | U | 05/29/90 |
| | Bromodichloromethane | 0.0500 | ug/g | U | 05/29/90 |
| | Benzene | 0.0500 | ug/g | U | 05/29/90 |

* U denotes results less than the instrument detection limit.

| | | | | | |
|---|---|---|---|---|---|
| | Toluene | 0.0500 | ug/g | U | 05/29/90 |
| | Vinyl Chloride | 0.0500 | ug/g | U | 05/29/90 |

* U denotes results less than the instrument detection limit.

STATE OF ALABAMA
DEPARTMENT OF ENVIRONMENTAL MANAGEMENT
MONTGOMERY, ALABAMA

LABORATORY: (X) Montgomery ( ) Mobile ( ) Birmingham

Sample Type:

| | | | | | | | |
|---|---|---|---|---|---|---|---|
| Potable Water | [ ] | Landfill Leachate | [ ] | Toxic Extraction | [ ] | Composite | |
| Surface Water | [ ] | Hazardous Wastesite | [ ] | Ignitability | [ ] | Grab | |
| Soil/Sediment | [X] | Groundwater | [ ] | Corrosivity | [ ] | Container | P |
| Wastewater | [ ] | Waste (Special Handling) | [ ] | Reactivity | [ ] | | G |

Source Dannelly ANGB US80

Location 4-2-02

( ) Discharge from _____ (Point Source) to _____ (Receiving Water)

Comments _____ Preservative(s) _____

pH _____ D.O. _____ Sp. Cond. _____ Salinity _____ Turb. _____

PARAMETERS

| Date | | Value (mg/l) | Date | | Value (mg/l) | Date | | Value (mg/l) | Date | | Value (mg/l) |
|---|---|---|---|---|---|---|---|---|---|---|---|
| | Acid | | | Phenol | | | Al | | | Mn | |
| | ALK | | | $PO_4$-P | | | Ag | | | Na | |
| | $BOD_5$ | | | ($S^=$) | | | As | | | Ni | |
| | ($Cl^-$) | | | ($SO_4^=$) | | | Ba | | | Pb | |
| | COD | | | TSS | | | Ca | | | Pt | |
| | $CN^-$ | | | TDS | | | Cd | | | Sb | |
| | ($F^-$) | | | TFS | | | $Cr^T$ | | | Se | |
| | Hard | | | TKN | | | $Cr^{+6}$ | | | Zn | |
| | $NH_3$-N | | | TOC | | | Cu | | Other | | |
| | $NO_3$-N | | | TON | | | Fe | | BTEX-Vol | | |
| | $NO_2$-N | | | TS | | | Hg | | | | |
| | O & G | | | VSS | | | Mg | | | | |

F. Coli. _____

| SAMPLE COLLECTED BY | (Signature) | DATE/TIME | RELINQUISHED BY | (Signature) | DATE/TIME |
|---|---|---|---|---|---|
| B.G. | B.E.G. | 12:35 5/25/90 | B.G. | B.E.G. | 2:00 5/25/ |

| RECEIVED BY | (Signature) | DATE/TIME | RELINQUISHED BY | (Signature) | DATE/TIME |
|---|---|---|---|---|---|
| | | | | | |

| RECEIVED BY | (Signature) | DATE/TIME | RELINQUISHED BY | (Signature) | DATE/TIME |
|---|---|---|---|---|---|
| | | | | | |

| RECEIVED IN LAB BY | (Signature) | DATE/TIME | LABORATORY I.D. NO. |
|---|---|---|---|
| D. Oliver | 5/25 | 2:00 | 0105296 |

SEND REPORT TO: Cox (Mat + Test)

ADEM Form 68 5/83

TSS = Total Non-Filtrable Residue
TDS = Total Filtrable Residue
TS = Total Residue
VSS = Volatile Residue

# ADEM

## ALABAMA
## DEPARTMENT OF ENVIRONMENTAL MANAGEMENT

Guy Hunt
Governor

Leigh Pegues, Director

1751 Cong. W. L.
Dickinson Drive
Montgomery, AL
36130
205/271-7700

Field Offices:

Unit 806, Building 8
225 Oxmoor Circle
Birmingham, AL
35209
205/942-6168

P.O. Box 953
Decatur, AL
35602
205/353-1713

2204 Perimeter Road
Mobile, AL
36615
205/479-2336

June 19, 1990

M E M O R A N D U M

TO: Buddy Cox
Highway Department

FROM: John Chitwood JC/mpt

SUBJECT: Laboratory Results

Attached are laboratory results from samples submitted to the ADEM Central Laboratory for analysis by the Highway Department.

JC/mpt

Attachments

# ADEM

## ALABAMA
## DEPARTMENT OF ENVIRONMENTAL MANAGEMENT

Guy Hunt
Governor

Leigh Pegues, Director

1751 Cong. W. L.
Dickinson Drive
Montgomery, AL
36130
205/271-7700

Field Offices:

Unit 806, Building 8
225 Oxmoor Circle
Birmingham, AL
35209
205/942-6168

P.O. Box 953
Decatur, AL
35602
205/353-1713

2204 Perimeter Road
Mobile, AL
36615
205/479-2336

June 8, 1990

M E M O R A N D U M

TO: Buddy Cox
Highway Department

FROM: John Chitwood JCC

SUBJECT: Laboratory Results

Attached are laboratory results from samples submitted to the ADEM Central Laboratory for analysis by the Highway Department.

JC/mpt

Attachments

# ADEM

## ALABAMA
## DEPARTMENT OF ENVIRONMENTAL MANAGEMENT

Guy Hunt
Governor

Leigh Pegues, Director

1751 Cong. W. L.
Dickinson Drive
Montgomery, AL
36130
205/271-7700

Field Offices:

Unit 806, Building 8
225 Oxmoor Circle
Birmingham, AL
35209
205/942-6168

P.O. Box 953
Decatur, AL
35602
205/353-1713

2204 Perimeter Road
Mobile, AL
36615
205/479-2336

June 5, 1990

Mr. Buddy E. Cox
Materials & Tests
Alabama Highway Department
Fairgrounds Road
Montgomery, Alabama 36130

RE: Samples 0105293, 0105294,
0105295, 0105296, and 0105297

Dear Mr. Cox:

Attached please find results of samples submitted to the Department of Environmental Management Laboratory on May 5, 1990. Should you have any questions with regard to the results please contact Mr. Joe Marsh at 271-7980

Sincerely,

E. John Williford

E. John Williford, Chief
Field Operations Division

EJW/TM/km

Enclosure

cc: Mr. Joe Marsh

INVOICE

To:

Attn:

Our Lab # : 0105293
Your Sample ID: HIWAY
Sample Matrix : WATER

Invoice No.: 0103191
Invoice Date: 05/30/

INVOICE SUMMARY: Test Charge: 150.00 ..... 150.0
Additional Charges:

$ 150.0

TOTAL ..... $ 150.

ITEMIZED TEST CHARGES:

| Lab# | Test | Fee |
|---|---|---|
| 0105293 | 11DCE | |
| 0105293 | OX | |
| 0105293 | OCCB | |
| 0105293 | 12DCE | |
| 0105293 | PDLB | |
| 0105293 | OCT | |
| 0105293 | BEZ | |
| 0105293 | DBM | |
| 0105293 | FX | |
| 0105293 | MX | |
| 0105293 | TCE | 150.00 |
| 0105293 | 13DCP | |
| 0105293 | 11CB | |
| 0105293 | 13CP | |
| 0105293 | PCT | |
| 0105293 | CB | |
| 0105293 | 111TCE | 0.00 |
| 0105293 | MDCM | |
| 0105293 | 112TE | |
| 0105293 | T13DP | |
| 0105293 | CT | |
| 0105293 | MCH | |
| 0105293 | T12DCP | |
| 0105293 | EB | |
| 0105293 | BM | |
| 0105293 | TOL | |
| 0105293 | SBB | |
| 0105293 | 112CP | |
| 0105293 | CE | |
| 0105293 | CHCL3 | |

| Label | Text | Freq |
|---|---|---|
| 0105293 | CH | |
| 0105293 | H | |
| 0105293 | WPB | |
| 0105293 | PIST | |
| 0105293 | 124THB | |
| 0105293 | TBB | |
| 0105293 | 123TCB | |
| 0105293 | 124TCB | |
| 0105293 | 12DCF | |
| 0105293 | 3DFG | |
| 0105293 | [illegible] | |
| 0105293 | 123TP | |
| 0105293 | VC | |
| 0105293 | STY | |
| 0105293 | ECM | |
| 0105293 | CDDM | |
| 0105293 | DCFM | |
| 0105293 | HSB | |
| 0105293 | IPB | |
| 0105293 | 1121TE | |
| 0105293 | 175MB | |
| 0105293 | 8B | |
| 0105293 | 4CLE | |
| 0105293 | 112TCE | |
| 0105293 | C12D | |
| 0105293 | FTCM | |
| 0105293 | NBB | |

INVOICE

To:

Attn:

Our Lab # : 0105294
Your Sample ID: HTRAY
Sample Matrix : WATER

Invoice No.: 0103192

Invoice Date: 05/30/90

INVOICE SUMMARY: Test Charge: 150.00 ..... 150.00
Additional Charge#:

$ 150.00

TOTAL ..... $ 150.00

ITEMIZED TEST CHARGES:

| LabN | Test | Fee |
|---|---|---|
| 0105294 | 11DCE | |
| 0105294 | 111TCE | 0.00 |
| 0105294 | 12DCE | |
| 0105294 | OX | |
| 0105294 | VC | |
| 0105294 | CDBM | |
| 0105294 | PDCB | |
| 0105294 | PX | |
| 0105294 | 22DCP | |
| 0105294 | CB | |
| 0105294 | FTCM | |
| 0105294 | PCM | |
| 0105294 | STY | |
| 0105294 | 135MB | |
| 0105294 | 112TCE | |
| 0105294 | EB | |
| 0105294 | BM | |
| 0105294 | TOL | |
| 0105294 | PEZ | |
| 0105294 | CT | |
| 0105294 | T12DC | |
| 0105294 | 124TCB | |
| 0105294 | BB | |
| 0105294 | CHBRZ | |
| 0105294 | 123TP | |
| 0105294 | NBB | |
| 0105294 | BDCM | |
| 0105294 | TCE | 150.00 |
| 0105294 | CE | |
| 0105294 | CHCL3 | |

| Lab# | Test | Fee |
|---|---|---|
| 0105294 | CM | |
| 0105294 | FIST | |
| 0105294 | BCM | |
| 0105294 | [illegible] | |
| 0105294 | 1122TC | |
| 0105294 | 13CP | |
| 0105294 | C12D | |
| 0105294 | 124TMB | |
| 0105294 | 123TCB | |
| 0105294 | HCB | |
| 0105294 | MX | |
| 0105294 | 130CP | |
| 0105294 | 12DCP | |
| 0105294 | 1112TC | |
| 0105294 | NDCB | |
| 0105294 | ODCB | |
| 0105294 | TBB | |
| 0105294 | N | |
| 0105294 | IPB | |
| 0105294 | OCT | |
| 0105294 | FCT | |
| 0105294 | SBB | |
| 0105294 | DCFM | |
| 0105294 | 11DCP | |
| 0105294 | 11CD | |
| 0105294 | HPB | |
| 0105294 | DBM | |

Attn:

Our Lab # : [illegible] Invoice No.: 0102173
Your Sample ID: [illegible]
Sample Matrix : [illegible] Invoice Date: [illegible]

INVOICE SUMMARY: Test Charge: 200.00 ..... 200.00
Additional Charges:

$ 200.00

TOTAL ..... $ 200.00

ITEMIZED TEST CHARGES:

| Lab# | Test | Fee |
|---|---|---|
| 0105295 | ODCB | |
| 0105295 | MDCB | |
| 0105295 | PCT | |
| 0105295 | 120CE | |
| 0105295 | BD | |
| 0105295 | BDCM | |
| 0105295 | 12DCP | |
| 0105295 | CHBR3 | |
| 0105295 | PM | |
| 0105295 | CB | |
| 0105295 | DCM | |
| 0105295 | VC | |
| 0105295 | OX | |
| 0105295 | 13DCP | |
| 0105295 | DBM | |
| 0105295 | 1122TE | |
| 0105295 | TCE | 200.00 |
| 0105295 | T12DC | |
| 0105295 | C120 | |
| 0105295 | 123TP | |
| 0105295 | 11DCP | |
| 0105295 | PX | |
| 0105295 | 124TMB | |
| 0105295 | MX | |
| 0105295 | BCM | |
| 0105295 | MBB | |
| 0105295 | DCPM | |
| 0105295 | CDBM | |
| 0105295 | TCL | |
| 0105295 | PIST | |

| Lab# | Test | Fee |
|---|---|---|
| 0105295 | H | |
| 0105295 | HFB | |
| 0105295 | PCT | |
| 0105295 | 12CP | |
| 0105295 | 22DCP | |

| Lab# | Test | Fee |
|---|---|---|
| 0105295 | H | |
| 0105295 | [illegible] | |
| 0105295 | CCT | |
| 0105295 | [illegible] | |
| 0105295 | [illegible] | |
| 0105295 | SOB | |
| 0105295 | TBB | |
| 0105295 | [illegible] | |
| 0105295 | 11CD | |
| 0105295 | CHCL3 | |
| 0105295 | CN | |
| 0105295 | 1112TE | |
| 0105295 | CT | |
| 0105295 | 111TCE | 0.00 |
| 0105295 | FTCN | |
| 0105295 | CE | |
| 0105295 | JFB | |
| 0105295 | HCB | |
| 0105295 | 13DMB | |
| 0105295 | 112TCE | |
| 0105295 | 11DCE | |
| 0105295 | PDCB | |
| 0105295 | BEZ | |
| 0105295 | EB | |
| 0105295 | 124TCB | |
| 0105295 | 4CLE | |
| 0105295 | STY | |

To:

Attn:

Invoice No.: 0103194

Our Lab # : 0105276
Your Sample ID: H1WAT
Sample Matrix : SOIL

Invoice Date: 05/30/90

INVOICE SUMMARY: Test Charge: 200.00 ..... 200.00
Additional Charges:

$ 200.00

TOTAL ..... $ 200.00

ITEMIZED TEST CHARGES:

| Lab# | Test | Fee |
|---|---|---|
| 0105296 | OX | |
| 0105296 | SBB | |
| 0105296 | EB | |
| 0105296 | T12DC | |
| 0105296 | DCM | |
| 0105296 | STY | |
| 0105296 | ODCB | |
| 0105296 | C12D | |
| 0105296 | MDCB | |
| 0105296 | 22DCP | |
| 0105296 | 12DCP | |
| 0105296 | 13CP | |
| 0105296 | 135NB | |
| 0105296 | TOL | |
| 0105296 | 1112TE | |
| 0105296 | 123TP | |
| 0105296 | 4CME | |
| 0105296 | 1122TE | |
| 0105296 | 13DCP | |
| 0105296 | PX | |
| 0105296 | PDCB | |
| 0105296 | MX | |
| 0105296 | 11CD | |
| 0105296 | DBM | |
| 0105296 | NBB | |
| 0105296 | DCPM | |
| 0105296 | PCT | |
| 0105296 | HPB | |
| 0105296 | IPB | |
| 0105296 | PIST | |

| Lab# | Test | Fee |
|---|---|---|
| 0105296 | 112TCE | |
| 0105296 | 123TCB | |
| 0105296 | 124TCB | |

| [illegible] | [illegible] | [illegible] |
|---|---|---|
| 0105296 | 112TCE | |
| 0105296 | 123TCP | |
| 0105296 | 124TCB | |
| 0105296 | 124THB | |
| 0105296 | 111TCF | 0.00 |
| 0105296 | FTCM | |
| 0105296 | CT | |
| 0105296 | 12DCE | |
| 0105296 | BEZ | |
| 0105296 | CE | |
| 0105296 | 11DCP | |
| 0105296 | 11DCE | |
| 0105296 | DCT | |
| 0105296 | TCE | 200.00 |
| 0105296 | HCB | |
| 0105296 | CNBR3 | |
| 0105296 | EM | |
| 0105296 | CDAM | |
| 0105296 | CHCL3 | |
| 0105296 | CM | |
| 0105296 | TEB | |
| 0105296 | SB | |
| 0105296 | VC | |
| 0105296 | BCM | |
| 0105296 | BDCM | |
| 0105296 | N | |
| 0105296 | CB | |

INVOICE

To:

Attn:

Our Lab # : 0105297
Your Sample ID: HIWAY
Sample Matrix : SOIL

Invoice No.: 0103195

Invoice Date: 05/30/90

INVOICE SUMMARY: Test Charge: 200.00 ..... 200.00
Additional Charges:

$ 200.00

TOTAL ..... $ 200.00

ITEMIZED TEST CHARGES:

| Lab# | Test | Fee |
|---|---|---|
| 0105297 | 11DCE | |
| 0105297 | MDCB | |
| 0105297 | PDCB | |
| 0105297 | TBB | |
| 0105297 | CT | |
| 0105297 | BEZ | |
| 0105297 | HCB | |
| 0105297 | IPB | |
| 0105297 | 12DCE | |
| 0105297 | 1112TE | |
| 0105297 | CHBR3 | |
| 0105297 | TCE | 200.00 |
| 0105297 | 112TCE | |
| 0105297 | 123TCB | |
| 0105297 | 1122TE | |
| 0105297 | JCLE | |
| 0105297 | 123TP | |
| 0105297 | BDCM | |
| 0105297 | NPB | |
| 0105297 | VC | |
| 0105297 | BM | |
| 0105297 | CB | |
| 0105297 | FTCM | |
| 0105297 | DCFM | |
| 0105297 | 13CP | |
| 0105297 | TOL | |
| 0105297 | BB | |
| 0105297 | CHCL3 | |
| 0105297 | CM | |
| 0105297 | SBB | |

| Lab# | Test | Fee |
|---|---|---|
| 0105297 | MX | |

| Lab# | Test | Fee |
|---|---|---|
| 0105297 | DY | |
| 0105297 | 124TCB | |
| 0105297 | 124TMB | |
| 0105297 | DSM | |
| 0105297 | DDCB | |
| 0105297 | PY | |
| 0105297 | OX | |
| 0105277 | C12D | |
| 0105297 | 135MB | |
| 0105297 | DCM | |
| 0105297 | 12DCP | |
| 0105297 | 13DCP | |
| 0105297 | PIST | |
| 0105297 | N | |
| 0105297 | EB | |
| 0105297 | STY | |
| 0105297 | T12DC | |
| 0105297 | DCM | |
| 0105297 | 11CD | |
| 0105297 | FCT | |
| 0105297 | 11DCP | |
| 0105297 | CDCM | |
| 0105297 | CE | |
| 0105297 | 111TCE | 0.00 |
| 0105297 | OCT | |
| 0105297 | NBB | |
| 0105297 | 22DCP | |

INVOICE

To:

Attn:

Our Lab # : 0105298
Your Sample ID: HIMAT
Sample Matrix : SOIL

Invoice No.: 0103196

Invoice Date: 05/30/90

INVOICE SUMMARY: Test Charge: 200.00 ..... 200.00
Additional Charges:

$ 200.00

TOTAL ..... $ 200.00

ITEMIZED TEST CHARGES:

| Lab# | Test | Fee |
|---|---|---|
| 0105298 | 124TMB | |
| 0105298 | T12DC | |
| 0105298 | DCM | |
| 0105298 | 11DCP | |
| 0105298 | 11CD | |
| 0105298 | 13CP | |
| 0105298 | ODCB | |
| 0105298 | 111TCE | 0.00 |
| 0105298 | VC | |
| 0105298 | TCE | 200.00 |
| 0105298 | BM | |
| 0105298 | CHBR3 | |
| 0105298 | OX | |
| 0105298 | PDCB | |
| 0105298 | 12DCP | |
| 0105298 | 22DCP | |
| 0105298 | EB | |
| 0105298 | C12D | |
| 0105298 | CM | |
| 0105298 | CT | |
| 0105298 | 12DCE | |
| 0105298 | BEZ | |
| 0105298 | DBM | |
| 0105298 | MDCB | |
| 0105298 | 124TCB | |
| 0105298 | 123TCB | |
| 0105298 | BB | |
| 0105298 | BDCM | |
| 0105298 | PX | |
| 0105298 | TOL | |

| Lab# | Test | Fee |
|---|---|---|

| Lab# | Test | Fee |
|---|---|---|
| 0105298 | SIY | |
| 0105298 | [illegible] | |
| 0105298 | ODBM | |
| 0105298 | CE | |
| 0105298 | CHCLE | |
| 0105298 | OCPM | |
| 0105298 | HCB | |
| 0105298 | JPO | |
| 0105298 | 1122TE | |
| 0105298 | 135MB | |
| 0105298 | 112TCE | |
| 0105298 | 11DCE | |
| 0105298 | BCM | |
| 0105298 | HAB | |
| 0105298 | 4CLE | |
| 0105298 | 123TP | |
| 0105298 | IBB | |
| 0105298 | PCT | |
| 0105298 | CB | |
| 0105298 | MX | |
| 0105298 | N | |
| 0105298 | 1112TE | |
| 0105298 | NFB | |
| 0105298 | FICM | |
| 0105298 | OCT | |
| 0105298 | SBB | |
| 0105298 | PIST | |

- INVOICE -

To:

Attn:

Our Lab # : 0105299 Invoice No.: 0103197
Your Sample ID: HIWAY
Sample Matrix : SOIL Invoice Date: 05/30/

INVOICE SUMMARY: Test Charge: 429.00 ..... 429.00
Additional Charges:

$ 429.00

TOTAL ..... $ 429.00

ITEMIZED TEST CHARGES:

| Lab# | Test | Fee |
|---|---|---|
| 0105299 | NNFM | |
| 0105299 | DEF | |
| 0105299 | NNDPA | |
| 0105299 | FA | |
| 0105299 | HgE | |
| 0105299 | HCB | |
| 0105299 | HCE | |
| 0105299 | 24DNT | |
| 0105299 | PBS | [illegible] |
| 0105299 | 4CPPE | |
| 0105299 | AgE | |
| 0105299 | APPT | |
| 0105299 | 124TCB | |
| 0105299 | N | |
| 0105299 | AsE | 185.00 |
| 0105299 | BEHP | |
| 0105299 | DNOP | |
| 0105299 | PA | |
| 0105299 | ANT | |
| 0105299 | BCE | 225.00 |
| 0105299 | 13DCB | |
| 0105299 | FLR | |
| 0105299 | 12DCB | |
| 0105299 | BCIPE | |
| 0105299 | 23DCB | |
| 0105299 | P | |
| 0105299 | HCBZ | |
| 0105299 | 4BPPE | |
| 0105299 | BCEM | |
| 0105299 | BAP | |

| Lab | [illegible] |
|---|---|
| 0105299 | TP |
| 0105299 | [illegible] |
| 0105299 | CaE |
| 0105299 | [illegible] |
| 0105299 | [illegible] |
| 0105299 | [illegible] |
| 0105299 | ACNP |
| 0105299 | SeE |
| 0105299 | 14DCB |
| 0105299 | MB |
| 0105299 | CRY |
| 0105299 | BKFA |
| 0105299 | ACN |
| 0105299 | DMP |
| 0105299 | 12DPH |
| 0105299 | 23781D |
| 0105299 | BAA |
| 0105299 | HCCP |
| 0105299 | BBP |
| 0105299 | I |
| 0105299 | PbE |
| 0105299 | CrE |
| 0105299 | ZCN |
| 0105299 | BBFA |
| 0105299 | MMMA |
| 0105299 | CdE |

- INVOICE -

To:

Attn:

Our Lab # : 0105300 Invoice No.: 0103190
Your Sample ID: HIWAY
Sample Matrix : SOIL Invoice Date: 05/30 9

INVOICE SUMMARY: Test Charges: 429.00 ..... 429.0
Additional Charges:

$ 429.0

TOTAL ..... $ 429.0

ITEMIZED TEST CHARGES:

| LabN | Test | Fee |
|---|---|---|
| 0105300 | BCE | 225.00 |
| 0105300 | T | |
| 0105300 | 12DCB | |
| 0105300 | P | |
| 0105300 | PCEM | |
| 0105300 | 14DCB | |
| 0105300 | DAA | |
| 0105300 | BDFA | |
| 0105300 | BTD | |
| 0105300 | 13DCB | |
| 0105300 | 2378TD | |
| 0105300 | 4CPPE | |
| 0105300 | BKFA | |
| 0105300 | BAP | |
| 0105300 | 124TCB | |
| 0105300 | FA | |
| 0105300 | ACN | |
| 0105300 | DMF | |
| 0105300 | EEP | |
| 0105300 | FLR | |
| 0105300 | CRY | |
| 0105300 | S&E | |
| 0105300 | NB | |
| 0105300 | HCE | |
| 0105300 | NNDPA | |
| 0105300 | 12DPH | |
| 0105300 | 4BPTE | |
| 0105300 | HCBZ | |
| 0105300 | 24DNT | |
| 0105300 | HCB | |

| Lab# | Test | Fee |
|---|---|---|
| 0105300 | DNSG | |
| 0105300 | [illegible] | |
| 0105300 | [illegible] | |
| 0105300 | [illegible] | |
| 0105300 | AsE | 155.00 |
| 0105300 | [illegible] | |
| 0105300 | [illegible] | |
| 0105300 | [illegible] | |
| 0105300 | CrE | |
| 0105300 | BCIPE | |
| 0105300 | BEPP | |
| 0105300 | HNPM | |
| 0105300 | AgE | |
| 0105300 | HgE | |
| 0105300 | FES | 19.00 |
| 0105300 | H | |
| 0105300 | CNE | |
| 0105300 | TP | |
| 0105300 | DBPT | |
| 0105300 | BGHIP | |
| 0105300 | DEP | |
| 0105300 | BaE | |
| 0105300 | ANT | |
| 0105300 | 33DCB | |
| 0105300 | DBA | |
| 0105300 | PA | |

INVOICE

To:

Attn:

Our Lab # : 0105301 Invoice No.: 0103192
Your Sample ID: HIWAY
Sample Matrix : SOIL Invoice Date: 05/30/9

INVOICE SUMMARY: Test Charge: 429.00 ..... 429.00
Additional Charges:

$ 429.00

TOTAL ..... $ 429.00

ITEMIZED TEST CHARGES:

| Lab# | Test | Rec |
|---|---|---|
| 0105301 | 4BFPE | |
| 0105301 | [illegible] | |
| 0105301 | M | |
| 0105301 | HCCP | |
| 0105301 | DEP | |
| 0105301 | 26DNT | |
| 0105301 | 12DPH | |
| 0105301 | 4CPPE | |
| 0105301 | SaE | |
| 0105301 | BBFA | |
| 0105301 | HgE | |
| 0105301 | 124TCB | |
| 0105301 | AsE | 185.00 |
| 0105301 | NNPM | |
| 0105301 | ACN | |
| 0105301 | DMP | |
| 0105301 | PbE | |
| 0105301 | BaE | |
| 0105301 | HCB | |
| 0105301 | ASNP | |
| 0105301 | 24DNT | |
| 0105301 | FLR | |
| 0105301 | BEHP | |
| 0105301 | DNOP | |
| 0105301 | 14DCB | |
| 0105301 | 2378TD | |
| 0105301 | DBA | |
| 0105301 | BGHIP | |
| 0105301 | NNMA | |
| 0105301 | BCEN | |

| Lab# | Test | Fee |
|---|---|---|
| 0105301 | DDPT | |
| 0105301 | CME | |
| 0105301 | CrE | |
| 0105301 | BBP | |
| 0105301 | HCBZ | |
| 0105301 | HMDPA | |
| 0105301 | PBS | 15.00 |
| 0105301 | AdE | |
| 0105301 | 33DCB | |
| 0105301 | BAP | |
| 0105301 | BCE | 225.00 |
| 0105301 | 13DCB | |
| 0105301 | BID | |
| 0105301 | PA | |
| 0105301 | NB | |
| 0105301 | P | |
| 0105301 | ANT | |
| 0105301 | BAA | |
| 0105301 | FA | |
| 0105301 | IP | |
| 0105301 | CRY | |
| 0105301 | 12DCB | |
| 0105301 | BKFA | |
| 0105301 | I | |
| 0105301 | HCE | |
| 0105301 | BCIPE | |

INVOICE

To:

Attn:

Our Lab # : 0105302 Invoice No.: 0103200
Your Sample ID: HIWAY
Sample Matrix : SOIL Invoice Date: 05/30/93

INVOICE SUMMARY: Test Charge: 429.00 ..... 429.00
Additional Charges:

$ 429.00

TOTAL ..... $ 429.00

ITEMIZED TEST CHARGES:

| Lab# | Test | Fee |
|---|---|---|
| 0105302 | P | |
| 0105302 | 12DCB | |
| 0105302 | CdE | |
| 0105302 | HCBZ | |
| 0105302 | CrE | |
| 0105302 | BEHP | |
| 0105302 | FA | |
| 0105302 | 14DCB | |
| 0105302 | BAA | |
| 0105302 | CRY | |
| 0105302 | 33DCB | |
| 0105302 | DBPT | |
| 0105302 | HNMA | |
| 0105302 | PA | |
| 0105302 | ANT | |
| 0105302 | 4BPPE | |
| 0105302 | 12DPH | |
| 0105302 | 2378TD | |
| 0105302 | AgE | |
| 0105302 | HgE | |
| 0105302 | PEC | 19.00 |
| 0105302 | AsE | 185.00 |
| 0105302 | BeE | |
| 0105302 | 13DCB | |
| 0105302 | EBF | |
| 0105302 | BAP | |
| 0105302 | IP | |
| 0105302 | DBA | |
| 0105302 | SGHIP | |
| 0105302 | N | |

| Lab# | Test | Fee |
|---|---|---|
| 0105302 | HCT | |
| 0105302 | HCO | |
| 0105302 | PRFA | |
| 0105302 | FHE | |
| 0105302 | SeE | |
| 0105302 | OHF | |
| 0105302 | 2SONT | |
| 0105302 | FLP | |
| 0105302 | DNOF | |
| 0105302 | BBFA | |
| 0105302 | BCE | 275.00 |
| 0105302 | HNPH | |
| 0105302 | I | |
| 0105302 | ACH | |
| 0105302 | HCE | |
| 0105302 | RCEM | |
| 0105302 | 124TCB | |
| 0105302 | BCIPE | |
| 0105302 | 24DNT | |
| 0105302 | NIG | |
| 0105302 | ZCN | |
| 0105302 | DEP | |
| 0105302 | ACNP | |
| 0105302 | HNDPA | |
| 0105302 | NE | |
| 0105302 | 4CPPE | |

INVOICE

To:

Attn:

Our Lab # : 0105303 Invoice No.: 0103201
Your Sample ID: PIWAY
Sample Matrix : SOIL Invoice Date: 05/30/9

INVOICE SUMMARY: Test Charge: 429.00 ..... 429.
Additional Charges:

$ 429.

Total ..... $ 429.

ITEMIZED TEST CHARGES:

| LabW | Test | Fee |
|---|---|---|
| 0105303 | BKFA | |
| 0105303 | ACN | |
| 0105303 | BEHP | |
| 0105303 | 33DCB | |
| 0105303 | 2CN | |
| 0105303 | BCIPE | |
| 0105303 | 12DCB | |
| 0105303 | BGFA | |
| 0105303 | BAP | |
| 0105303 | I | |
| 0105303 | DNOP | |
| 0105303 | CRY | |
| 0105303 | HCCP | |
| 0105303 | NNMA | |
| 0105303 | AsE | 185.00 |
| 0105303 | BaE | |
| 0105303 | NB | |
| 0105303 | CrE | |
| 0105303 | 12DPH | |
| 0105303 | HCB | |
| 0105303 | 14DCB | |
| 0105303 | GAA | |
| 0105303 | HgE | |
| 0105303 | NCE | |
| 0105303 | NNDPA | |
| 0105303 | DEP | |
| 0105303 | NNPH | |
| 0105303 | PbE | |
| 0105303 | H | |
| 0105303 | 124TCB | |

| LAB | TEST | FEE |
|---|---|---|
| 0105303 | PGHIP | |
| 0105303 | FA | |
| 0105303 | ANT | |
| 0105303 | CdE | |
| 0105303 | GID | |
| 0105303 | FA | |
| 0105303 | 2ATNT | |
| 0105303 | S#E | |
| 0105303 | AgE | |
| 0105303 | FLR | |
| 0105303 | PBS | 19.00 |
| 0105303 | IP | |
| 0105303 | 4CPPE | |
| 0105303 | HC6Z | |
| 0105303 | DMF | |
| 0105303 | 130C6 | |
| 0105303 | DB# | |
| 0105303 | 24DNT | |
| 0105303 | 4BPPE | |
| 0105303 | P | |
| 0105303 | DBPT | |
| 0105303 | RCEH | |
| 0105303 | BFT | |
| 0105303 | ACHP | |
| 0105303 | 2376TD | |
| 0105303 | RCE | 225.00 |

INVOICE

To:

Attn:

Our Lab # : 0105304
Your Sample ID: HIMAY
Sample Matrix : SOIL

Invoice No.: 0103202
Invoice Date: 05/30/9

INVOICE SUMMARY: Test Charge: 429.00 ..... 429.0
Additional Charges:

$ 429.0

TOTAL ..... $ 429.0

ITEMIZED TEST CHARGES:

| Lab# | Test | Fee |
|---|---|---|
| 0105304 | 24DNT | |
| 0105304 | ANT | |
| 0105304 | NB | |
| 0105304 | DEP | |
| 0105304 | 14DCB | |
| 0105304 | ACNP | |
| 0105304 | BCE | 225.00 |
| 0105304 | 4CPPE | |
| 0105304 | PA | |
| 0105304 | BCEM | |
| 0105304 | 124TCB | |
| 0105304 | FLR | |
| 0105304 | HCB | |
| 0105304 | 12DCB | |
| 0105304 | NNPM | |
| 0105304 | N | |
| 0105304 | MeE | |
| 0105304 | 26DNT | |
| 0105304 | SeE | |
| 0105304 | 2378TD | |
| 0105304 | 13DCB | |
| 0105304 | 33DCB | |
| 0105304 | BEHP | |
| 0105304 | BCIPE | |
| 0105304 | HCBZ | |
| 0105304 | 3MPE | |
| 0105304 | MBFA | |
| 0105304 | NNDPA | |
| 0105304 | BAP | |
| 0105304 | TP | |

| Lab# | Test | Fee |
|---|---|---|
| 0105304 | HCCP | |
| 0105304 | OXPT | |
| 0105304 | PDS | 19.00 |
| 0105304 | DNP | |
| 0105304 | AgE | |
| 0105304 | PbE | |
| 0105304 | BKFA | |
| 0105304 | ZnE | |
| 0105304 | BOA | |
| 0105304 | CRY | |
| 0105304 | DPOP | |
| 0105304 | HCE | |
| 0105304 | 12DPH | |
| 0105304 | BID | |
| 0105304 | BBF | |
| 0105304 | FA | |
| 0105304 | P | |
| 0105304 | DBA | |
| 0105304 | NMMA | |
| 0105304 | BGHIP | |
| 0105304 | ACN | |
| 0105304 | I | |
| 0105304 | CrE | |
| 0105304 | CdE | |
| 0105304 | AsE | 185.00 |
| 0105304 | 2CN | |

INVOICE

To:

Attn:

Our Lab # : 0105305 Invoice No.: 0103203
Your Sample ID: HIWAY
Sample Matrix : SOIL Invoice Date: 05/30/

INVOICE SUMMARY: Test Charge: 429.00 ..... 429.
Additional Charges:

$ 429.

TOTAL ..... $ 429.0

ITEMIZED TEST CHARGES:

| Lab# | Test | Fee |
|---|---|---|
| 0105305 | H | |
| 0105305 | 120CB | |
| 0105305 | 2378TD | |
| 0105305 | 1234TCB | |
| 0105305 | HCE | |
| 0105305 | BBP | |
| 0105305 | BCHIP | |
| 0105305 | BCIPE | |
| 0105305 | HCB | |
| 0105305 | 35DCB | |
| 0105305 | DEHP | |
| 0105305 | HHHA | |
| 0105305 | 141CB | |
| 0105305 | MCEM | |
| 0105305 | BCE | 125.00 |
| 0105305 | 24DNT | |
| 0105305 | BPA | |
| 0105305 | CRY | |
| 0105305 | FLR | |
| 0105305 | T | |
| 0105305 | IP | |
| 0105305 | 135TCB | |
| 0105305 | DBA | |
| 0105305 | AEPA | |
| 0105305 | HCBZ | |
| 0105305 | PA | |
| 0105305 | HCCP | |
| 0105305 | 4CPPE | |
| 0105305 | DEP | |
| 0105305 | HHCPA | |

| Lab# | Test | Fee |
|---|---|---|
| 0105305 | ACN | |
| 0105305 | DMP | |
| 0105305 | CrE | |
| 0105305 | ACNP | |
| 0105305 | 2NDNT | |
| 0105305 | ANT | |
| 0105305 | PbE | |
| 0105305 | SeE | |
| 0105305 | BAP | |
| 0105305 | NB | |
| 0105305 | DNCP | |
| 0105305 | PBS | 17.00 |
| 0105305 | 12DPH | |
| 0105305 | HgE | |
| 0105305 | CdE | |
| 0105305 | FA | |
| 0105305 | 2CN | |
| 0105305 | BID | |
| 0105305 | BKFA | |
| 0105305 | 46PPE | |
| 0105305 | BaE | |
| 0105305 | NNPM | |
| 0105305 | P | |
| 0105305 | AgE | |
| 0105305 | AsE | 185.00 |
| 0105305 | DBPT | |

- INVOICE -

To:

Attn:

Our Lab # : 0105306 Invoice No.: 0103204
Your Sample ID: HIGAY
Sample Matrix : SOIL Invoice Date: 05/30/

INVOICE SUMMARY: Test Charge: 429.00 ..... 429.0
Additional Charges:

$ 427.0

TOTAL ..... $ 429.0

ITEMIZED TEST CHARGES:

| Lab# | Test | Fee |
|---|---|---|
| 0105306 | 24DNT | |
| 0105306 | 2CN | |
| 0105306 | 124TCB | |
| 0105306 | HCB | |
| 0105306 | 4CPPE | |
| 0105306 | HCCP | |
| 0105306 | DEP | |
| 0105306 | N | |
| 0105306 | BCHIP | |
| 0105306 | 33DCB | |
| 0105306 | ACNP | |
| 0105306 | AsE | |
| 0105306 | FLR | |
| 0105306 | ANT | |
| 0105306 | NNDPA | |
| 0105306 | AsE | 125.00 |
| 0105306 | DBA | |
| 0105306 | BCEM | |
| 0105306 | BAP | |
| 0105306 | IP | |
| 0105306 | DAA | |
| 0105306 | CRY | |
| 0105306 | BCIPE | |
| 0105306 | HgE | |
| 0105306 | BaE | |
| 0105306 | I | |
| 0105306 | BKFA | |
| 0105306 | SeE | |
| 0105306 | HCBZ | |
| 0105306 | PA | |

| Lab# | Test | Fee |
|---|---|---|
| 0105306 | 123CB | |
| 0105306 | DBPT | |
| 0105306 | FA | |
| 0105306 | P | |
| 0105306 | ASH | |
| 0105306 | HG | |
| 0105306 | PEE | |
| 0105306 | BBP | |
| 0105306 | BCE | 225.00 |
| 0105306 | 140CB | |
| 0105306 | BEHP | |
| 0105306 | DNOP | |
| 0105306 | NNFM | |
| 0105306 | 120PB | |
| 0105306 | 4BFFE | |
| 0105306 | CrE | |
| 0105306 | 2378TD | |
| 0105306 | CdE | |
| 0105306 | 26DNT | |
| 0105306 | 120CB | |
| 0105306 | NNDPA | |
| 0105306 | HCE | |
| 0105306 | DID | |
| 0105306 | DMP | |
| 0105306 | PBS | 19.00 |
| 0105306 | BBFA | |

- INVOICE -

To:

Attn:

Our Lab # : 0105307 Invoice No.: 0103205
Your Sample ID: HIWAY
Sample Matrix : SOIL Invoice Date: 05/30/

INVOICE SUMMARY: Test Charge: 200.00 ..... 200.00
Additional Charges:

$ 200.

TOTAL ..... $ 200.

ITEMIZED TEST CHARGES:

| Lab# | Test | Fee |
|---|---|---|
| 0105307 | 11DCE | |
| 0105307 | SBR | |
| 0105307 | 12DCE | |
| 0105307 | BB | |
| 0105307 | CE | |
| 0105307 | PDCB | |
| 0105307 | CT | |
| 0105307 | 133BB | |
| 0105307 | BEZ | |
| 0105307 | 1112TE | |
| 0105307 | 1122TE | |
| 0105307 | 4CLF | |
| 0105307 | CB | |
| 0105307 | BTX | |
| 0105307 | 22TCP | |
| 0105307 | CHCL3 | |
| 0105307 | 112TCE | |
| 0105307 | DCFM | |
| 0105307 | CDBM | |
| 0105307 | FTCB | |
| 0105307 | MBW | |
| 0105307 | TCE | 200.00 |
| 0105307 | TFB | |
| 0105307 | CCL4 | |
| 0105307 | CL | |
| 0105307 | CLF | |
| 0105307 | FCT | |
| 0105307 | DBB | |
| 0105307 | MTCB | |
| 0105307 | 123TP | |

| Lab# | Test | Res |
|---|---|---|
| 0105307 | TCL | |
| 0105307 | 80CB | |
| 0105307 | PCN | |
| 0105307 | BG | |
| 0105307 | 11DCP | |
| 0105307 | 13DCP | |
| 0105307 | 12DCP | |
| 0105307 | 13CP | |
| 0105307 | HCP | |
| 0105307 | EB | |
| 0105307 | PTST | |
| 0105307 | H | |
| 0105307 | MPB | |
| 0105307 | [illegible] | |
| [illegible] | [illegible] | |
| 0105307 | [illegible] | |
| 0105307 | ODCP | |
| 0105307 | T12DC | |
| 0105307 | 111TCE | 0.00 |
| 0105307 | VC | |
| 0105307 | OX | |
| 0105307 | 124TMB | |
| 0105307 | 123TCB | |
| 0105307 | OCN | |
| 0105307 | MX | |
| 0105307 | C12D | |
| 0105307 | 124TCB | |

# Appendix H
# WATER WELL SURVEY

# WELL INVENTORY
# ALABAMA AIR NATIONAL GUARD FACILITY
# DANNELLY FIELD MUNICIPAL AIRPORT
# MONTGOMERY, ALABAMA

**Prepared for**

**AIR NATIONAL GUARD READINESS CENTER**
**ANDREWS AIR FORCE BASE, MARYLAND**

**Submitted by**

**CH2M HILL, INC.**
**2567 FAIRLANE DRIVE**
**MONTGOMERY, ALABAMA**

**July 1995**

## Introduction

As part of the Site Investigation for the Alabama Air National Guard (ANG) at Dannelly Field in Montgomery, Alabama, a well inventory was conducted. The purpose of the well inventory is to identify potential receptors that may potentially be affected by compounds that may be identified during the Site Investigation.

The inventory was conducted for an area extending 1 mile out in all directions from the ANG Dannelly Field Facility. The estimated aerial extent of the well inventory is shown graphically in Figure 1. In addition, all public water supply wells located within a 5-mile radius at the ANG were identified.

## Methodology

Initially, the study area was identified on a United States Geological Survey (USGS) 7-1/2 minute topographic quadrangle. This map was used to identify the well inventory area and as an aid to locate households and businesses currently using water not supplied by the City of Montgomery.

Before the door-to-door survey, a plat of the area's municipal water supply systems, supplied by the Montgomery Water Board, was reviewed. To supplement the review process, a windshield survey was conducted within the 1-mile radius of the study area. Both recent and more established developments were identified, looking for pump houses and other evidence of private water usage. On the basis of the plat and the assumption that the established developments are more likely to use private water, they were targeted for the door-to-door survey.

The door-to-door survey was conducted at the households identified during the windshield survey. The interviewers visited 43 households within the area shown in Figure 1. The interviewers repeatedly tried to talk to several residents, but some were not at home during the survey. However, the survey team was able to establish their water source through discussions with surrounding neighbors.

## Results

The water use in the area is a combination of municipal water systems and privately owned wells, with municipal water being the primary source. The private wells identified are installed in either the Eutaw aquifer (deep well) or in shallow sand and gravel beds located within the terrace deposits (shallow well). Many of the respondents were unsure

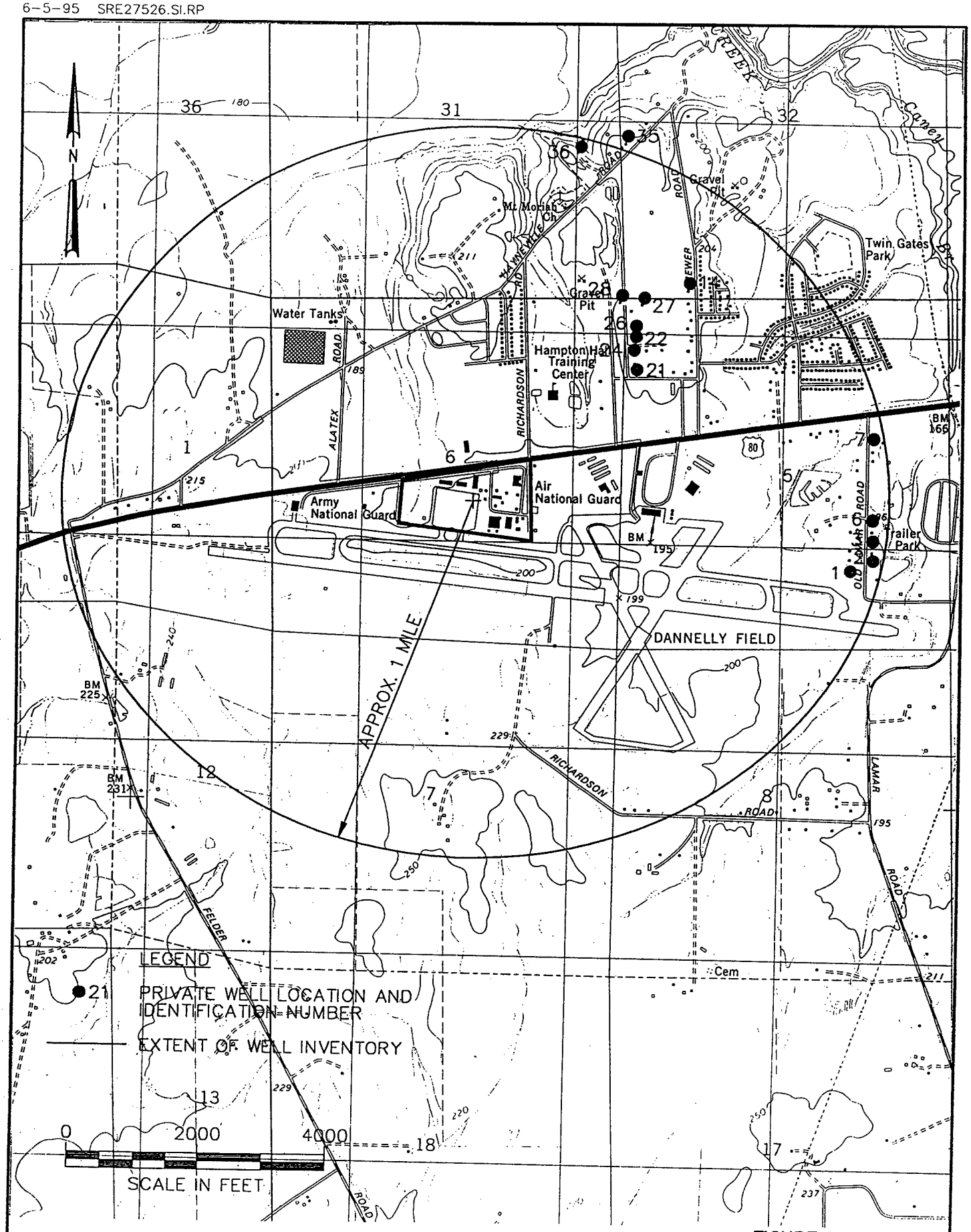


**FIGURE 1**
PRIVATE WATER WELLS
LOCATION MAP
187th FIGHTER GROUP
Alabama Air National Guard, Dannelly Field, Montgomery, AL

CH2M HILL

DNG-0045.DWG/1:1

of the actual depth of their wells, thus making it difficult to obtain an exact number of deep and shallow wells located within the area. Additionally, several residents indicated that they obtained their water supply from naturally occurring springs and artesian wells located within the study area.

The results of the well inventory are summarized below:

| | |
|---|---|
| Operating wells | 17 |
| Abandoned wells | 15 |
| Naturally occurring springs and artisan wells (used as a water source) | 2 |

Table 1 lists the summary of the door-to-door survey. Figure 1 shows the estimated aerial extent of the well inventory area as well as the location of the operating wells, abandoned wells, and springs. Each identified operating well and spring delineated in Table 1 was assigned a number corresponding to the numbered locations shown in Figure 1. The operating wells are identified in Figure 1 by circles, abandoned wells as triangles, and the spring (water supply) as a square. Figure 2 shows the location of public water supply wells operated by Montgomery Water Board.

## Discussion

Two main areas are shown on the east and northeast sides of the ANG as being served by privately owned water sources (Figure 1). One well was also identified southwest of the ANG, but it is solely used for watering livestock (Well 19, Figure 1). The City of Montgomery is currently extending its water service in both of the private water usage areas. Residents are or will be given the opportunity to switch over to municipal water service. Furthermore, the Montgomery Airport Authority is actively purchasing property located within the 1-mile radius and tearing down the existing dwellings, thus reducing the number of private wells. This purchasing, coupled with the increasing availability of municipal water, will mean a continued reduction of private water users within the 1-mile radius.

The area shown to the northeast of the ANG along Old Hayneville, Brewer, and Rich Roads shows a concentration of private water users. The wells found in this area are screened at various depths, reportedly ranging from 40 ft to more than 200 ft. Additionally, a spring and a well under artesian conditions were identified in this area.

**Table 1**
**Dannelly Field, Montgomery, Alabama**
**Source Summary**

| Identification Number | User Address | Source | Use | Approximate Depth, (ft) |
|---|---|---|---|---|
| 1 | 4620 Old Hayneville Rd | spring | consumption/irrigation | ground surface |
| 2 | 4560 Old Hayneville Rd | well | consumption/irrigation | >200 |
| 3 | 3915 Brewer Rd | well | consumption/irrigation | 200 |
| 4 | 4328 Brewer Rd | well | irrigation | 80 |
| 5 | 4340 Brewer Rd | well | consumption/irrigation | >150 |
| 6 | 4412 Brewer Rd | well | consumption/irrigation | unknown |
| 7 | 4420 Brewer Rd | well | consumption/irrigation | 40 |
| 8 | 4458 Rich Rd | well | consumption/irrigation | >150 |
| 9 | 4460 Rich Rd | well | consumption/irrigation | unknown |
| 10[a] | 4506 Rich Rd<br>4512 Rich Rd | well | consumption/irrigation | 60 to 70 |
| 11 | 4524 Rich Rd | well | consumption/irrigation | 85 |
| 12 | 4530 Rich Rd | well | consumption/irrigation | >200 |
| 13 | 4561 Rich Rd | well | consumption/irrigation | unknown |
| 14 | 4554 Rich Rd | well[b] | consumption/irrigation | unknown |
| 15 | 1250 Old Lamar Rd | well | consumption/irrigation | 108 |
| 16 | 1180 Old Lamar Rd | well | consumption/irrigation | unknown |
| 17 | 1185 Old Lamar Rd | well | consumption/irrigation | 65 |
| 18 | 1145 Old Lamar Rd | well | consumption/irrigation | 180 |
| 19 | Rt. #1, Box 22B<br>Hope Hull, AL 36043<br>(334) 286-0931[c] | well | watering livestock | unknown |

[a]Well serves both residences
[b]Well under artesian conditions
[c]Owner's contact address and phone number

07-16-93

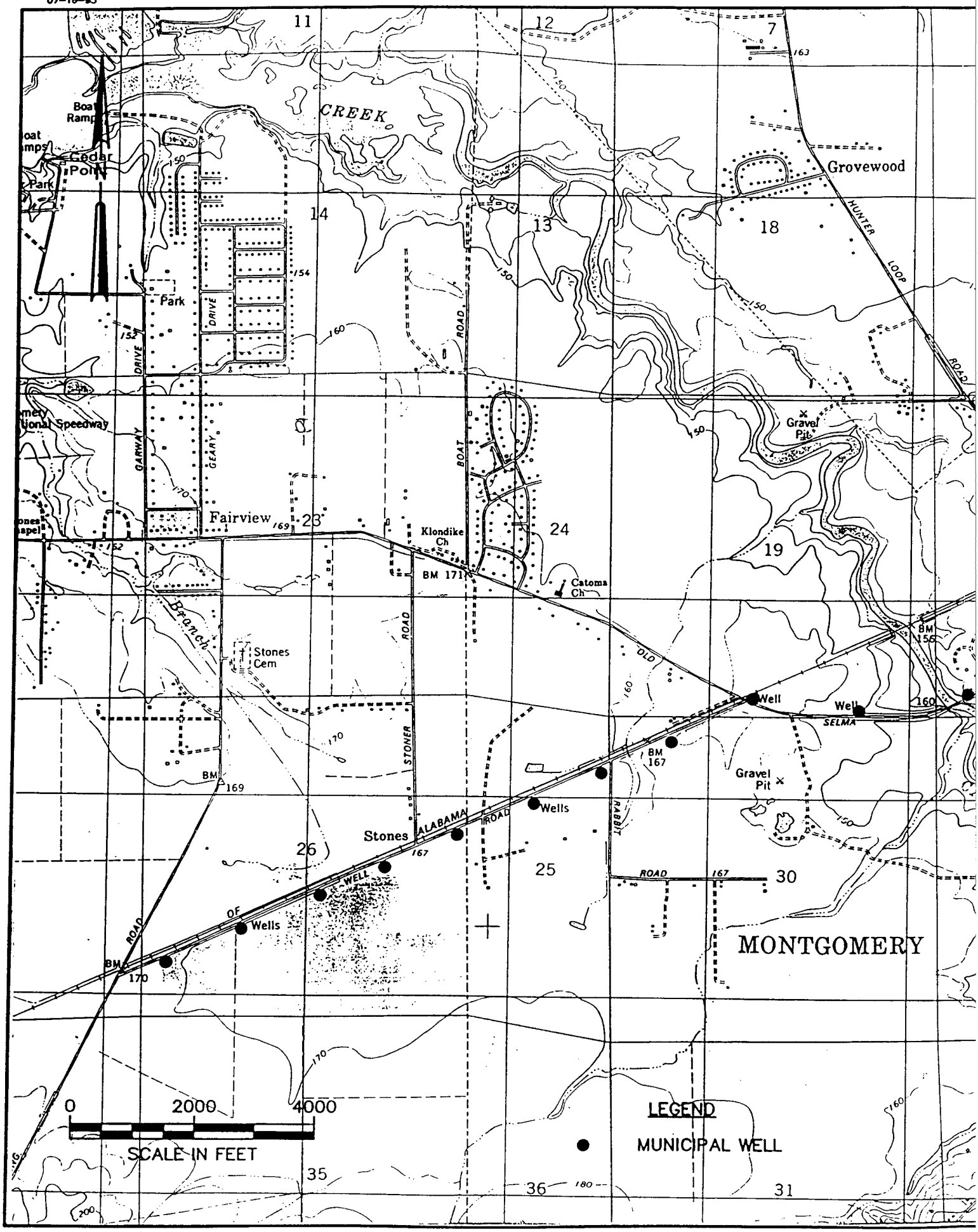


D:\DANG\DNG-0044.DWG

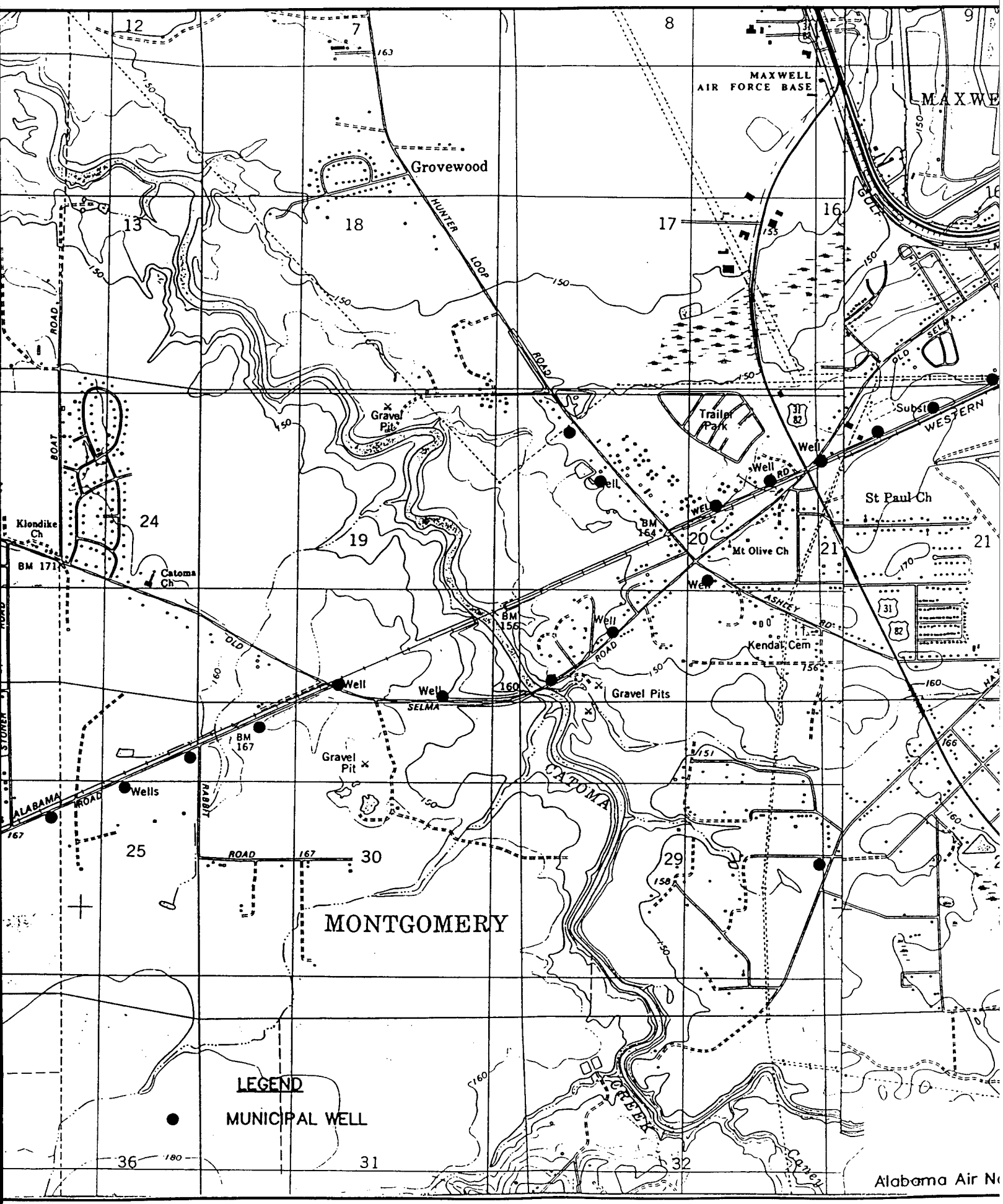
MAXWELL
AIR FORCE BASE
Grovewood
HUNTER LOOP ROAD
Gravel Pit
Trailer Park
Subst
WESTERN
Well
St Paul Ch
Mt Olive Ch
BM 164
Klondike Ch
BM 171
Catoma Ch
BM 156
Kendal Cem
Gravel Pits
SELMA
BM 167
Gravel Pit
Wells
ALABAMA ROAD
CATOMA
MONTGOMERY
LEGEND
MUNICIPAL WELL
Alabama Air N

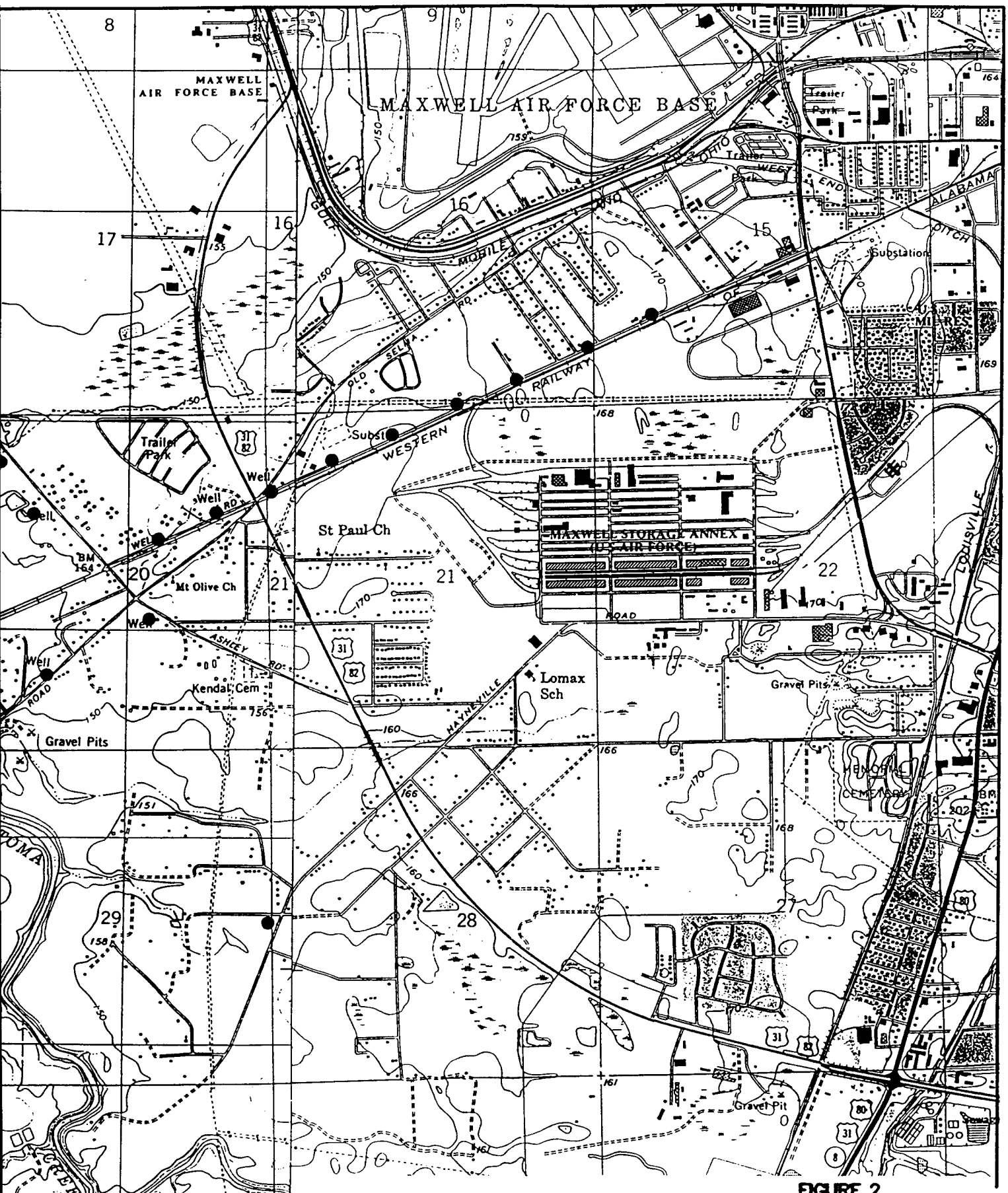


**FIGURE 2**
PUBLIC WATER WELLS
LOCATION MAP
187th Fighter Group
Alabama Air National Guard, Dannelly Field, Montgomery, AL

CH2M HILL

This Page is Left Blank Intentionally.

The area to the east of the ANG also shows a concentration of privately owned wells. The wells in this area (Old Lamar Road) are screened at various depths and reportedly range from 65 ft to 180 ft. However, a number of the residences did not know the depth of their wells. The wells in this area probably are screened within the Eutaw Formation below the Mooreville chalk.

All of the private well (deep and shallow) and spring water users were asked to comment on the quality of their water. They all considered the water to be superior to the municipal source and noted a reluctance to switch. There has been no apparent decline in the water quality over years of consumption.

The remaining areas within a 1-mile radius of the site are served by a public municipal water system. The interviewers visited a few households in each of these areas and learned that the areas are served by these water systems. Therefore, they did not visit the remaining households in each area.

Within a 5-mile radius of the ANG installation, the Water Works and Sanitary Sewer Board of the City of Montgomery operates the West Well Field. The wellfield is located primarily along Foshee and Well Roads at a distance ranging from 2 to 5 miles north of the ANG. The wellfield (Figure 2) includes 29 wells that currently supply about 36 percent or 21 million gallons per day of potable water for the Board. The wells are typically multiple aquifer completions that withdraw water from the Eutaw, Gordo, and Coker Formations at an average depth of approximately 700 ft.

The Water Board supplies about 5 percent of the remaining balance of its water supply from the North Well Field and about 59 percent from the C. T. Perry Plant, which treats water from the Tallapoosa River. The North Well Field and the Perry Plant's raw water sources are located in the northern and northeastern Montgomery areas, respectively.

# Appendix I
# TOXICITY VALUES OF SELECTED CONTAMINANTS

# APPENDIX I
# Toxicity Profiles for Human Health Effects for Chemicals or Potential Concern Alabama ANG--Dannelly Field

## ACETONE

Acute exposure to acetone can cause irritation of the eyes, skin, and respiratory tract. Depression of the central nervous system and narcosis can occur after inhalation of high concentrations of acetone. Dryness of the mouth and throat, dizziness, nausea, incoordination, loss of speech, and even coma have been described in some cases of workers exposed occupationally to acetone. In a chronic study reported by EPA (IRIS, 3/1/88), kidney damage was observed in albino rats administered acetone by oral gavage. Kidney damage and metabolic changes have been noted in humans who ingested acetone (Sax, 1989). Acetone can increase the toxicity of other chemicals, particularly solvents. The hepatotoxicity of carbon tetrachloride can be increased greatly in the presence of acetone.

## ANTIMONY

Many antimony compounds irritate the gastrointestinal tract. Acute intoxication with antimony results in severe vomiting and diarrhea. With occupational and inhalation exposure, rhinitis and acute pulmonary edema may occur. The chronic inhalation of some antimony compounds can produce respiratory problems and diseases. Transient spots on the skin have been reported in some workers. Antimony may form stibine gas, which causes hemolysis.

## ARSENIC

Acute oral exposure to arsenic can cause muscle cramps, facial swelling, cardiovascular reactions, severe gastrointestinal damage, and vascular collapse leading to death. Sensory loss and hematopoietic symptoms delayed after exposure to high concentrations are usually reversible. Inhalation exposures can cause severe irritation of the nasal lining, larynx, and bronchi. Chronic oral or inhalation exposure can produce changes in skin, including hyperpigmentation and hyperkeratosis; peripheral neuropathy; liver injury; cardiovascular disorders; oral exposures associated with peripheral vascular disease; and blackfoot disease. Arsenic is a known human carcinogen; oral exposures are associated with skin cancer, inhalation exposures with lung cancer. Toxicity varies for different compounds; inorganic trivalent arsenic compounds are usually more toxic than pentavalent compounds; high doses of some inorganic arsenic compounds to pregnant laboratory animals produced malformations in offspring.

## BARIUM

Acute ingestion of barium salts can cause prolonged muscular stimulation, gastroenteritis, hypokalemia, and cardiovascular effects such as ventricular fibrillation and extra systoles. Prolonged occupational inhalation has resulted in baritosis--a benign, reversible pneumoconiosis. Toxicity of compounds depends on solubility.

## BENZENE

Acute exposure to high concentrations of benzene vapors may cause central nervous system depression, unconsciousness, and fatal cardiac arrhythmias. Benzene is readily absorbed after oral and inhalation exposure. Chronic exposure of workers to low concentrations has been associated with blood disorders. Chromosomal aberrations in bone marrow and blood have been reported in experimental animals and some workers. Benzene has been classified as a Group A Human Carcinogen, based on evidence of carcinogenicity from epidemiological studies and correlations between exposure by inhalation and leukemia.

## BENZO[A]ANTHRACENE

No information is available on short-term dermal or inhalation effects. There is no information on systemic effects. PAHs as a group may cause skin disorders and immunosuppressive effects. Evidence exists that benzo[a]anthracene is carcinogenic to laboratory animals through dermal and ingestion exposure routes. Inhalation data are not available. Benzo[a]anthracene may cause skin and lung cancer. No reports exist relating cancer in humans from exposure to benzo[a]anthracene exclusively, but there are reports on exposure from PAH mixtures. This chemical is mutagenic in laboratory experiments. Benzo[a]anthracene may be metabolized into reactive derivatives.

## BENZO[A]PYRENE

Acute toxicity for Benzo[a]pyrene appears low when administered by oral or dermal routes to laboratory animals. Prolonged exposure may produce chronic dermatitis and reproductive changes. Repeated oral doses to mice have caused hypoplastic anemia. Induction of cancer is the key toxic endpoint from intermediate and long-term exposure. Benzo[a]pyrene is a constituent of coal tar, which is classified as a Level 1 known carcinogen by IARC and a Level B2 probable carcinogen by the EPA. Ingestion may produce stomach tumors, and inhalation may produce lung cancer. Prolonged skin exposure has been linked to an increase in skin cancer among workers. Benzo[a]pyrene is considered to be the most potent carcinogenic PAH. Benzo[a]pyrene is a mutagen.

## BENZO[B]FLUORANTHENE

No acute toxicity information is available. Systemic effects specific to benzo[b]fluoranthene have not been reported. Skin disorders and immunosuppressive effects have been reported for PAH mixtures. Experimental evidence exists that it causes lung and skin cancer in laboratory animals by dermal absorption and intratracheal distillation. There is no evidence of reproductive or teratogenic effects.

## BENZO[G,H,I]PERYLENE

Limited information for acute or chronic toxicity is available. It is a liver and skin carcinogen in laboratory animals. Data available are inadequate to determine carcinogenic potential in humans. Benzo[G,H,I]perylene has been reported to produce cocarcinogenic effects when applied to mouse skin along with benzo[a]pyrene.

## BIS(2-ETHYLHEXYL)PHTHALATE

(Di(2-ethylhexyl)phthalate or DEHP or BEHP)

In general, low acute toxicity has been reported in experimental animals; accidental acute exposure in man resulted in mild gastric disturbance and catharsis. Chronic exposure at relatively high concentration has retarded growth and resulted in increased liver and kidney weight in experimental animals. Oral administration to rats and mice resulted in increased hepatocellular carcinomas or neoplastic nodules. Classified by EPA as a B2 carcinogen. Some evidence in animals of teratogenic and fetotoxic effects exists. Reproductive effects, decreased fertility and testicular damage have been noted in rodents. This substance is poorly absorbed through skin and is rapidly metabolized.

## BROMODICHLOROMETHANE

Bromodichloromethane results from chlorination of precursors in raw water. Toxic effects of bromodichloromethane have been shown in laboratory animals and include sedation and hemorrhage in the kidney, adrenals, lungs, and brain. It is classified as a Group B2 Probable Human Carcinogen by ingestion exposure routes.

## BROMOFORM

Acute exposure to high levels of vapor produces irritation of the respiratory tract, pharynx, and larynx, with lacrimation and salivation. Other effects include headache,

listlessness, vertigo, unconsciousness, loss of reflexes, convulsions, and death usually caused by respiratory failure. This substance can cause decreased liver function and histopathological effects in experimental animals. Longer-term exposure to mice by oral administration causes decreased body weight, fatty metamorphosis of the liver, and hepatocellular changes. Inhalation studies with rats show disorders in prothrombin synthesis and glycogenesis in the liver and reduced filtration capacity in the kidney. Bromoform results from chlorination of natural organic precursors in raw water.

## CADMIUM

For acute exposures by ingestion, symptoms of cadmium toxicity include nausea, vomiting, diarrhea, muscular cramps, drop in blood pressure, vertigo, loss of consciousness, and possible collapse. Exposure by inhalation can cause respiratory ailments, acute chemical pneumonitis, and pulmonary edema. The major chronic effects in workers are respiratory and renal toxicity. Cadmium bioaccumulates in the kidney, and nephropathy results after critical concentration (around 200 ug/g) is reached. Inhalation can cause chronic obstructive pulmonary diseases. Chronic exposure also affects calcium metabolism. Cadmium is classified as a Group B1 Probable Human Carcinogen, by inhalation routes.

## CHLOROFORM

Acute toxic exposure effects of chloroform in humans include respiratory depression, coma, and liver and kidney damage. Chloroform (anesthetic) depresses the central nervous system and may result in cardiac arrest (apparently from sensitization to epinephrine). The chronic toxic exposure effects in animals include liver and kidney damage, fetotoxicity, and malignant tumors.

## CHROMIUM

Chromium is an essential micronutrient and is not toxic in trace quantities. Following oral exposure, absorption of chromium (III) is low while absorption of chromium (VI) is high. The major acute effect from oral exposure is renal tubular necrosis. Inhalation of chromate salts can cause irritation, inflammation, and ulceration of nasal mucosa. Chronic exposure to chromium (VI) can result in kidney damage. Inhalation exposures in industrial settings have resulted in damage to the respiratory system and have been associated with excess lung cancers. Exposures to the skin can result in allergic skin reactions in sensitive individuals. Overall, the hexavalent forms are usually more toxic than trivalent forms. Inhaled chromium (VI) is classified in Group A as a human carcinogen.

## CHRYSENE

Chrysene is absorbed by oral and dermal doses and accumulates in adipose and mammary tissues. Chronic toxic effects have not been described. It is carcinogenic in laboratory animals exposed to long-term dermal doses. There is limited evidence that chrysene is mutagenic. Epidemiological reports document incidences of skin cancer when exposed to PAH mixtures that included chrysene.

## COPPER

Copper is an essential micronutrient and is not toxic in quantities necessary for human health. Acute inhalation exposure to copper dusts can result in symptoms similar to metal fume fever. Exposure to dusts and mists of copper salt results in nasal congestion. Exposure to fumes results in upper respiratory tract irritation, metallic or sweet taste, and skin and hair discoloration. The major chronic toxic effect is hemolytic anemia in some dialysis patients.

## DIBENZO[A,H]ANTHRACENE

Oral absorption occurs but there is slow dermal absorption. IARC [1983] has concluded that there is enough evidence that dibenzo[a,h]anthracene is carcinogenic to laboratory animals. In laboratory experiments, oral doses have caused tumors in mice; intratracheal distillation has caused lung tumors in rats and dermal application has caused skin cancer. High doses in laboratory animals have produced fetal deaths.

## DIBROMOCHLOROMETHANE

In laboratory animals, dibromochloromethane causes liver changes including fatty metamorphosis, calcification, centrilobular necrosis, and vacuolar changes. Other effects include toxic nephropathy, salivary gland inflammation, and thyroid hyperplasia. It results from chlorination of precursors in raw water. There is some evidence of mutagenicity.

## DI-n-BUTYL PHTHALATE

One case of human oral exposure has been reported to cause nausea, vomiting, dizziness, headache, pain and irritation in the eyes, lacrimation, photophobia, and conjunctivitis; there was some renal involvement followed by recovery within 2 weeks. Irritation of eyes and upper respiratory tract has been noted in mice that inhaled aerosols of the compound. Liver and kidney lesions have been observed in mice receiving chronic oral doses. No carcinogenicity data are available. Di-n-butyl

phthalate may cause increased embryotoxicity and teratogenic effects in rats and mice. Testicular atrophy observed in animals may result from disturbances in zinc metabolism.

## 1,1-DICHLOROETHANE

1,1-Dichloroethane may cause central nervous system depression when inhaled at high concentrations. It is also a skin irritant. It has been classified as a Group C possible human carcinogen by ingestion exposure routes.

## 1,2-DICHLOROETHANE

CNS depression, lung irritation, and injury to liver, kidney, and adrenals have been reported. Deaths in humans exposed by ingestion or inhalation may result from circulatory and respiratory failure. Chronic exposure can cause liver degeneration and kidney damage in laboratory animals. Eye damage (necrosis of corneal epithelium) has been observed in dogs injected with 1,2-dichloroethane. Repeated exposures have been associated with anorexia, nausea, liver and kidney dysfunction, and neurological disorders in workers. It is carcinogenic in mice and rats exposed orally, and mutagenic in some tests in bacteria, barley, and fruit flies.

## 1,1-DICHLOROETHENE

1,1-Dichloroethene (Vinylidene Chloride) is rapidly absorbed following oral and inhalation exposure. The liver appears to be the principal target after acute exposures. At high concentrations, inhalation can cause central nervous system depression and unconsciousness. Reports of chronic health effects on workers exposed to 1,1-dichloroethene include liver function abnormalities, neurological and sensory disturbances, weakness, and fatigue. It is described as an "exquisite hepatotoxin" because it is more potent and faster acting than the classic hepatotoxin, carbon tetrachloride. Its structure is similar to vinyl chloride, a known human carcinogen. 1,1-Dichloroethene is classified as a Group C possible human carcinogen.

# DICHLOROMETHANE (METHYLENE CHLORIDE)

Dichloromethane acts as a mild narcotic irritating to eyes and upper respiratory passages. Fatalities have been associated with acute or prolonged exposure. In animals chronic exposure can affect the liver and kidney. Dichloromethane may substantially increase carboxyhemoglobin levels, preventing the transfer of oxygen to tissues. Damage to liver and CNS following long-term occupational exposure has been

reported. It is a carcinogen in female rats and male and female mice, is classified as B2 probable human carcinogen by EPA, and is mutagenic in some bacterial tests.

## ETHYLBENZENE

Acute inhalation exposure of humans to ethylbenzene concentrations of 435 mg/ml for eight hours has been found to result in sleepiness, fatigue, headache, and mild eye and respiratory irritation.

## FLUORANTHENE

Fluoranthene is acutely toxic by oral and dermal absorption. It can cross epithelial membranes and is a defatting agent that may affect the skin. Limited information available. IARC [1983] concluded there is no evidence that fluoranthene is carcinogenic on the basis of available data. When applied to laboratory animal skin simultaneously with other carcinogenic PAHs, it has increased the carcinogenicity of the compound (i.e., cocarcinogenic effects).

## FLUORENE

Fluorene may be toxic by inhalation, ingestion, or dermal contact and absorption. Data are inadequate to determine carcinogenic effects [IARC 1983]. No toxicity data are available for humans.

## LEAD

Lead is stored in the body in bone, the kidney, and the liver. The major adverse effects in humans caused by lead include alterations in the hematopoietic and nervous systems. The toxic effects are generally related to the concentration of lead in the blood. Blood concentration levels of over 80 ug/dl in children and over 100 ug/dl in sensitive adults can cause severe, irreversible brain damage, encephalopathy, and possible death. Chronic low level exposure to lead can affect the hematopoietic, nervous, and cardiovascular systems. Characteristic effects of chronic lead intoxification include anemia, effects to the immune system, sterility, neonatal mortality, abortion, and morbidity. Children are especially sensitive to low level effects. Acute toxic exposure in humans is characterized by encephalopathy, abdominal pain, hemolysis, liver damage, renal tubular necrosis, seizures, coma, and respiratory arrest. Certain lead salts are classified as Group B2 Carcinogens--Probable Human Carcinogens.

## NAPHTHALENE

Inhalation of vapor may cause eye irritation, headache, and confusion. Ingestion may cause abdominal pain, nausea, and vomiting. Skin or eye contact may lead to systemic effects such as bladder irritation, kidney effects, and nemoletic effects such as anemia and decreased hemoglobin. In animal studies, bronchial necrosis was observed in rats. Occurrence of cataracts upon naphthalene vapor and dust exposure has been observed in humans. Subchronic animal studies have shown that oral doses produced cataracts and degeneration of the retina. Dermatitis has been reported with repeated skin exposure. Two studies have reported hemolytic anemia in infants born to women exposed during pregnancy. Studies have not shown that naphthalene is carcinogenic. Naphthalene is commonly found in coal tar and epidemiological studies have shown coal tar to be carcinogenic. The role of naphthalene alone could not be determined. Acute exposures to large doses may cause hemolytic effects (destruction of red blood cells). This effect is most pronounced in individuals with a hereditary deficiency of glucose-6-phosphate dehydrogenase.

## NICKEL

Acute exposures to nickel-containing dust may result in chemical pneumonitis. Signs of acute nickel toxicity may include nausea, headaches, vomiting, chest pain, cough, hyperpnea, cyanosis, gastrointestinal and central nervous system effects, weakness, pneumonia, respiratory failure, cerebral edema, and death. Workers chronically exposed to nickel-containing compounds report allergic contact dermatitis and other dermatological effects, rhinitis, and nasal sinusitis and mucosal injury as among the most frequent effects. Nickel compounds implicated as having carcinogenic potential include insoluble dusts of nickel subsulfide and nickel oxides, vapor of nickel carbonyl and soluble aerosols of nickel sulfate, and nickel carbonyl.

## PHENANTHRENE

Phenanthrene is an irritant through inhalation and ingestion exposure; it may also be dermally absorbed and an allergen. There is inadequate data for the evaluation of cancer potential in experimental animals. It can cause photosensitization of the skin.

## PHENOL

Phenol is corrosive to tissue. Severe eye damage and blindness may result from direct eye contact. Skin contact may produce whitening of skin, burn, or systemic poisoning. Paleness, weakness, sweating, headaches, cyanosis, kidney damage, and death may occur. Chronic phenol poisoning is rare. It induces vomiting, difficulty swallowing,

diarrhea, lack of appetite, headaches, fainting, dizziness, and neural disturbances. Liver and kidney damage may occur. Phenol may promote the effects of certain carcinogens.

## PYRENE

Limited information is available. Evidence suggests that pyrene is cocarcinogenic in laboratory animal experiments.

## SELENIUM

Acute exposures can produce CNS effects, including nervousness, drowsiness, and convulsions, and eye and nasal irritation. Chronic exposure to selenium-containing compounds by inhalation can result in pallor, coated tongue, gastrointestinal disorders, nervousness, garlic breath, liver and spleen damage, anemia, and mucosal irritation. Discoloration, decayed teeth, skin eruptions, gastrointestinal distress, and loss of hair and nails have been reported in humans exposed orally. In livestock, excess intake can cause blind staggers (impaired vision, weak limbs, respiratory failure) and alkali disease (hair loss, sterility, atrophy of hooves, lameness, and anemia). Embryotoxic and teratogenic in animals. Selenium is carcinogenic in laboratory animals and may be anticarcinogenic and protective in humans. Selenium is an essential element. Its toxicity is related to chemical form.

## TETRACHLOROETHENE (PERCHLOROETHYLENE)

Tetrachloroethene can depress the CNS and cause narcosis. It is irritating to mucous membranes and skin and can cause lung edema. Neurological effects on dry-cleaners have been reported. Chronic exposure may result in pathological changes in liver of laboratory animals. It may also affect the kidney. In humans, inhalation exposure may produce irritation of respiratory tract, nausea, headache, sleeplessness, and abdominal pains. Fatalities have been reported. It is carcinogenic in laboratory animals. An increased incidence of cancers among dry-cleaning workers exposed to several solvents has been described.

## TOLUENE

Toluene is absorbed in humans following both inhalation and dermal exposure. At concentrations greater than 200 ppm (754 mg/ml), the primary acute effects are central nervous system depression and necrosis. At lower levels, nausea, fatigue, and incoordination have been reported. Chronic exposure to toluene vapors at concentrations of 200 to 800 ppm has been associated with central nervous and peripheral system effects, hepatomegaly, and hepatic and renal function changes.

## TRICHLOROETHENE

Trichloroethene (TCE) is a central nervous system depressant after acute and chronic exposure. Oral exposures of humans to single doses of 15 to 25 ml (21 to 35 gm) of TCE have resulted in vomiting, abdominal pain, and transient unconsciousness. Absorption from the gastrointestinal tract is virtually complete and is proportional to concentrations and duration of exposure following inhalation. High level exposure can result in death from respiratory and cardiac failure. Industrial use and contact with TCE as a concentrated solvent is associated with adverse dermatological effects; however, no adverse effects are reported after exposure as a dilute, aqueous solution. Long-term inhalation exposure can affect liver and kidneys in animals. In humans, changes in liver enzyme have been associated with TCE exposure. TCE is classified as a Group B2 Carcinogen--Probable Human Carcinogen.

## VINYL CHLORIDE

Acute occupational exposure to high concentrations of vinyl chloride can produce symptoms of narcosis. Respiratory tract irritation, bronchitis, headache, irritability, memory disturbances, and tingling sensations may also occur. Health effects associated with chronic occupational exposure include hepatitis-like liver changes, disturbances in visual and central nervous systems, decreased blood platelets and pulmonary function, and cardiovascular and gastrointestinal toxicity. Vinyl Chloride is classified as a Group A Known Human Carcinogen. Possible relationships between exposure and birth defects and fetal death have been reported. Chromosome aberrations have been reported in exposed workers.

## XYLENES

The three xylene isomers, compounds having the same chemical constituents in a different configuration, have similar toxicological properties and are discussed together. Dermal absorption is reported to be minor after exposure to xylene vapor, but may be significant after contact with the liquid. Acute inhalation exposure in humans to high concentrations can depress the central nervous system and irritate mucous membranes. Changes in behavioral tests, manual coordination, balance, and electroencephalographic patterns have been reported in humans from chronic exposure; development of a tolerance to some of these effects has been reported.

## ZINC

Zinc is an essential nutrient. The taste threshold to zinc is 15 ppm. Concentrations of soluble zinc salts of 40 ppm impart metallic taste. Acute adverse effects to inhalation

of zinc fumes include metal fume fever. Fever, nausea, vomiting, stomach cramps, and diarrhea may result from acute ingestions. Prolonged ingestion of zinc can result in irritability, muscular stiffness and pain, loss of appetite, and nausea. High levels of zinc in the diet may retard growth and produce defective mineralization of bone.

## SOURCES


American Conference of Governmental Industrial Hygienists, Inc. Documentation of the Threshold Limit Values. 1980, 1984.

Environmental Protection Agency. *Ambient Water Quality Criteria for Halomethanes.* EPA 44015-80-051. October 1980.

Environmental Protection Agency. *Health Advisories for Inorganics, Organics, and Pesticides.* March 1987.

International Agency for Research on Cancer. *IRAC Monographs.* Vol 3, 20, 23. International Agency for Research on Cancer. Lyons, France. 1973, 1979, 1980.

Klassen, C. D., ed., et al. Casarett and Doull's *Toxicology.* 3rd ed. New York. 1986.

National Academy of Sciences. *Drinking Water and Health.* Vol I. National Academy of Sciences. 1977.

Sittig, M. *Handbook of Toxic and Hazardous Chemicals.* Noyes Publications. Park Ridge, New Jersey. 1981.

Spencer, P. S. and H. H. Schaumburg, ed. *Experimental and Clinical Neurotoxicology.* Williams and Wilkins. Baltimore. 1980.

40 CFR 141:25720-25734. July 8, 1987. EPA, Drinking Water.

Doull's *Toxicology*, 3rd edition. Ed. C. D. Klaassen, M. O. Amdur. New York: Macmillan. 1986.

Sax, 7th edition, August 1989.

Ambient Water Quality Criteria for Halomethanes, EPA 44015-80-0151. October 1980.


NOTE: Health effects may be based on animal studies and do not imply that human exposure will have the same results.

Appendix J

# INVESTIGATION-DERIVED WASTE MANAGEMENT

# APPENDIX J
# Investigation-Derived Waste Management

## TASK DESCRIPTION AND PURPOSE

During the SI, 29 drums were filled with generated waste that included drilling cuttings, sludges, groundwater, decontamination water, well development water, plastic, soiled personnel protective equipment, and other disposable items. Some drums contained a combination of the materials listed above. The investigation-derived waste sampling was implemented to reduce the quantity of waste requiring offsite disposal while also verifying that contaminated materials were disposed of properly.

According to "RCRA ARARs: Focus on Closure Requirements," in order for RCRA requirements to be applicable, a Superfund waste must be determined to be a listed or characteristic hazardous waste under RCRA. Sample results were evaluated based on characteristic level criteria only because no evidence exists that listed hazardous waste disposal occurred at the site.

Background samples were obtained and analyzed for the presence of organic and inorganic constituents. Samples were then obtained of borings from Sites 1 and 4 and analyzed for organic constituents. Previous use of the site did not indicate the need to analyze for the presence of inorganics. These samples showed no significant concentrations of organic constituents. Samples were obtained from Site 2 and analyzed for organics and inorganics. Six samples obtained from Site 2 were found to contain significant levels of Trichloroethene. Therefore, wastes from Site 2 will be disposed of as a hazardous waste.

At Site 1 (POL Facility), which contained six underground JP-4 storage tanks, samples were obtained and found to contain greater than 100 ppm total petroleum hydrocarbon (TPH) as deep as 8 feet. Soils containing greater than 100 ppm TPH must be remediated. Aeration of the contaminated soil is recommended.

The remaining drums of waste are suitable for disposal at a properly permitted solid waste landfill.

## FIELD PROCEDURES

The disposal method selected for each investigation-derived waste material was based on field observations, field screening (HNu), and laboratory analyses of soil and water samples. All drums were sealed and labeled by boring and site and were stored in the Base hazardous waste generator storage area.

Appendix C contains the sample results pertaining to investigation-derived waste.

Appendix K

# Geologist's Log
# Well N-7
# Alabama Air National Guard
# Dannelly Field Municipal Airport

TABLE 4.—SAMPLE LOGS OF WELLS IN MONTGOMERY COUNTY, ALA.—Continued

| | Thickness (feet) | Depth (feet) |
|---|---|---|
| **Well N-2—Continued** | | |
| angular to subangular, quartzose, and clay, reddish-brown, pale green, and pale red-purple, sandy, micaceous | 10 | 740 |
| Coker formation: | | |
| Clay, moderate reddish-brown, pale red-purple, and pale green, sandy, micaceous | 10 | 750 |
| Sand, very pale orange, medium- to coarse-grained, angular to subangular, quartzose, ferruginous; clay, varicolored, sandy; and clay, greenish-gray, micaceous, pyritic | 40 | 790 |
| **Well N-7** | | |
| (Samples described by John C. Scott) | | |
| Owner: Alabama Air National Guard Driller: Acme Drilling Co. | | |
| Mooreville chalk: | | |
| Chalk, yellowish-gray, silty | 11 | 11 |
| Chalk, yellowish-gray to gray, silty | 12 | 23 |
| Chalk, gray, silty, slightly micaceous | 55 | 78 |
| Chalk, gray, silty, slightly micaceous and glauconitic | 14 | 92 |
| Chalk, gray, silty, slightly micaceous | 10 | 102 |
| Chalk, gray, silty, glauconitic, slightly micaceous, fossiliferous | 13 | 115 |
| Chalk, gray, silty, slightly glauconitic and fossiliferous | 10 | 125 |
| Chalk, gray, sandy, slightly glauconitic and micaceous, fossiliferous | 12 | 137 |
| Eutaw formation: | | |
| Sand, light gray, silty and fine- to medium-grained, angular to subangular, quartzose, sparsely glauconitic and micaceous, fossiliferous | 22 | 159 |
| Sand, light gray, silty and medium- to coarse-grained, angular to subangular, quartzose, fossiliferous, glauconitic, sparsely micaceous | 10 | 169 |
| Sand, light gray, medium- to coarse-grained, angular to subangular, quartzose, glauconitic | 13 | 182 |
| Silt, light gray, sandy, quartzose, glauconitic, sparsely micaceous and calcareous | 14 | 196 |
| Sand, light greenish-gray, fine- to medium-grained, angular to subangular, quartzose, very glauconitic, micaceous | 6 | 202 |
| Sand, light gray, coarse-grained, angular to subangular, quartzose, glauconitic | 22 | 224 |
| Sand, light gray, medium- to coarse-grained, angular to subangular, quartzose, glauconitic, and sandstone, white, calcareous | 23 | 247 |
| Sand, light gray, coarse-grained, angular to subangular, quartzose, sparsely glauconitic | 11 | 258 |
| Sand, yellowish-gray, medium-grained, angular to subangular, quartzose, sparsely glauconitic | 21 | 279 |
| Sand, light gray, medium- to coarse-grained, angular to subangular, quartzose, sparsely glauconitic, and micaceous | 12 | 291 |

TABLE 4.—SAMPLE LOGS OF WELLS IN MONTGOMERY COUNTY, ALA.—Continued

| | Thickness (feet) | Depth (feet) |
|---|---|---|
| **Well N-7—Continued** | | |
| Sand, light greenish-gray, medium-grained, angular to subangular, quartzose, glauconitic, micaceous, and clay, gray, sandy, micaceous | 10 | 301 |
| Sand, light greenish-gray, silty and medium- to coarse-grained, angular to subangular, quartzose, glauconitic, sparsely micaceous | 12 | 313 |
| Sand, light greenish-gray, silty and fine- to medium-grained, angular to subangular, quartzose, glauconitic, micaceous | 31 | 344 |
| Sand, light gray, medium-grained, angular to subangular, quartzose, sparsely glauconitic, and micaceous | 46 | 390 |
| Sand, light gray, medium- to coarse-grained, angular to subangular, quartzose, sparsely glauconitic and micaceous | 37 | 427 |
| Sand, light gray, coarse-grained, angular to subangular, quartzose, sparsely glauconitic and micaceous | 20 | 447 |
| Sand, light gray, medium- to coarse-grained, angular to subangular, quartzose, sparsely glauconitic, micaceous and pyritic, and clay, gray, sandy, micaceous | 10 | 457 |
| Sand, light gray, coarse-grained, angular to subangular, quartzose, sparsely glauconitic and micaceous | 13 | 470 |
| **Well N-11** | | |
| (Samples described by H. L. Reade, Jr.) | | |
| Owner: U. S. Geological Survey (test well GS-9) | | |
| Driller: Black Belt Drilling Co. | | |
| Mooreville chalk: | | |
| Chalk, yellowish-gray, silty, fossiliferous | 20 | 20 |
| Chalk, greenish-gray, silty, micaceous, fossiliferous | 140 | 160 |
| Eutaw formation: | | |
| Sand, light greenish-gray, coarse-grained, subangular to subrounded, frosted, quartzose, glauconitic, and sandstone, light greenish-gray, calcareous, glauconitic | 10 | 170 |
| Clay, greenish-gray, sandy, micaceous, and sandstone, white, calcareous | 10 | 180 |
| Sand, light greenish-gray, medium-grained, subangular to subrounded, frosted, quartzose, glauconitic, fossiliferous, and clay, greenish-gray, sandy, glauconitic, fossiliferous | 40 | 220 |
| Sandstone, white, calcareous, glauconitic, and sand, light greenish-gray, medium-grained, subangular to rounded, slightly frosted, quartzose, glauconitic | 10 | 230 |
| Sand, light greenish-gray, medium- to coarse-grained, subangular to subrounded, quartzose, glauconitic | 10 | 240 |
| Sand, light greenish-gray, medium- to coarse-grained, subangular to subrounded, slightly frosted, quartzose, glauconitic, and clay, greenish-gray, micaceous | 30 | 270 |
| Sand, light greenish-gray, coarse-grained, subangular to subrounded, frosted, quartzose, glauconitic, fossiliferous | 40 | 310 |
| Clay, greenish-gray, micaceous, and sand, light greenish- | | |